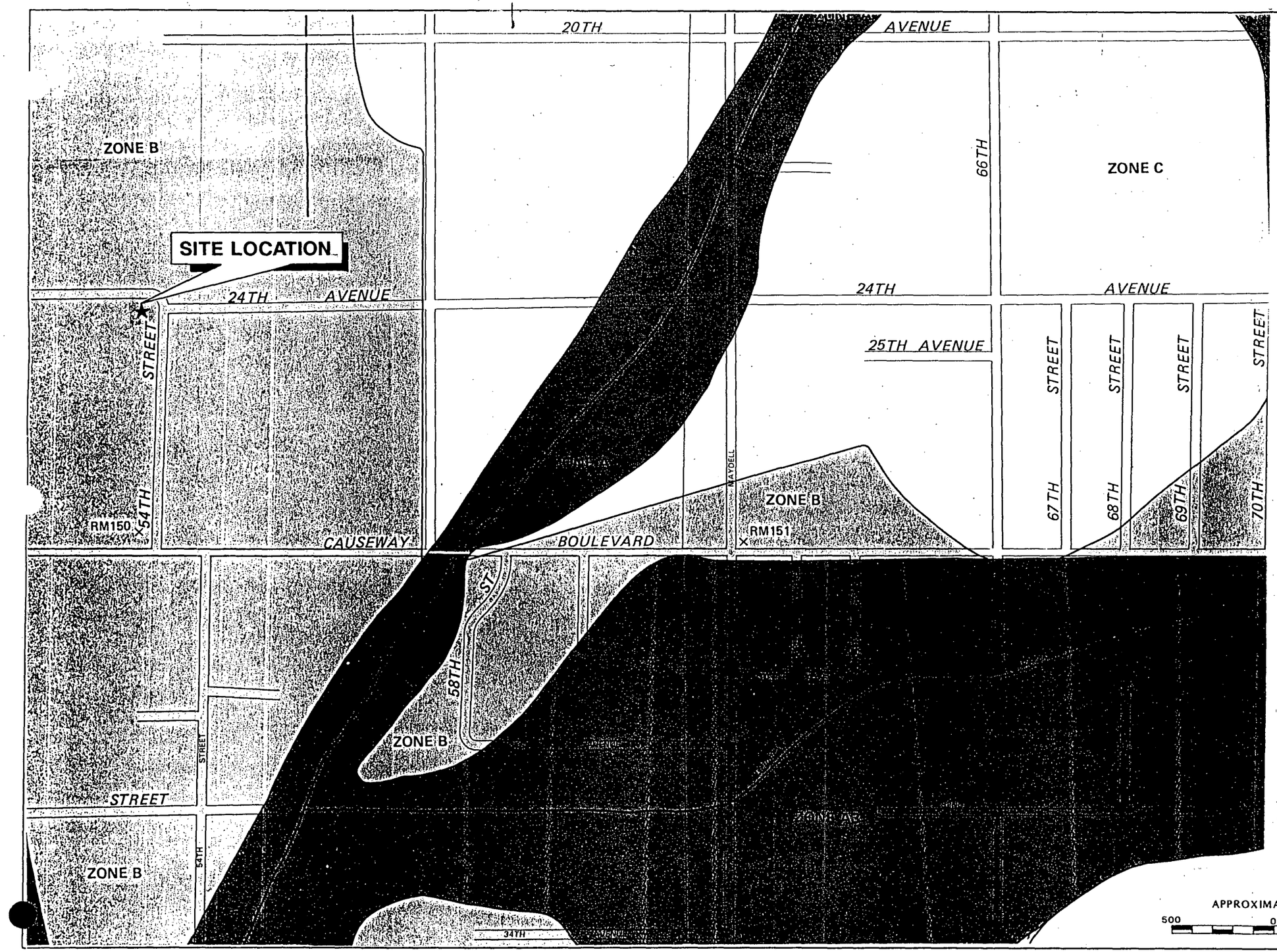

Figure I.B.4-2
Flood Insurance Map
Safety-Kleen Corp. Facility
Tampa, Florida

KEY TO MAP

500-Year Flood Boundary	
100-Year Flood Boundary	
Zone Designations*	ZONE B
100-Year Flood Boundary	
500-Year Flood Boundary	ZONE B
Base Flood Elevation Line With Elevation In Feet**	513
Base Flood Elevation in Feet Where Uniform Within Zone**	(EL 987)
Elevation Reference Mark	RM7×
Zone D Boundary	
River Mile	•M1.5

**Referenced to the National Geodetic Vertical Datum of 1929

*EXPLANATION OF ZONE DESIGNATIONS

ZONE	EXPLANATION
A	Areas of 100-year flood; base flood elevations and flood hazard factors not determined.
A0	Areas of 100-year shallow flooding where depths are between one (1) and three (3) feet; average depths of inundation are shown, but no flood hazard factors are determined.
AH	Areas of 100-year shallow flooding where depths are between one (1) and three (3) feet; base flood elevations are shown, but no flood hazard factors are determined.
A1-A30	Areas of 100-year flood; base flood elevations and flood hazard factors determined.
A99	Areas of 100-year flood to be protected by flood protection system under construction; base flood elevations and flood hazard factors not determined.
B	Areas between limits of the 100-year flood and 500-year flood; or certain areas subject to 100-year flooding with average depths less than one (1) foot or where the contributing drainage area is less than one square mile; or areas protected by levees from the base flood. (Medium shading)
C	Areas of minimal flooding. (No shading)
D	Areas of undetermined, but possible, flood hazards.
V	Areas of 100-year coastal flood with velocity (wave action); base flood elevations and flood hazard factors not determined.
V1-V30	Areas of 100-year coastal flood with velocity (wave action); base flood elevations and flood hazard factors determined.

N

APPROXIMATE SCALE

500 0 500 FEET

The ERM Group ®

13112.09/31109FIM/021291

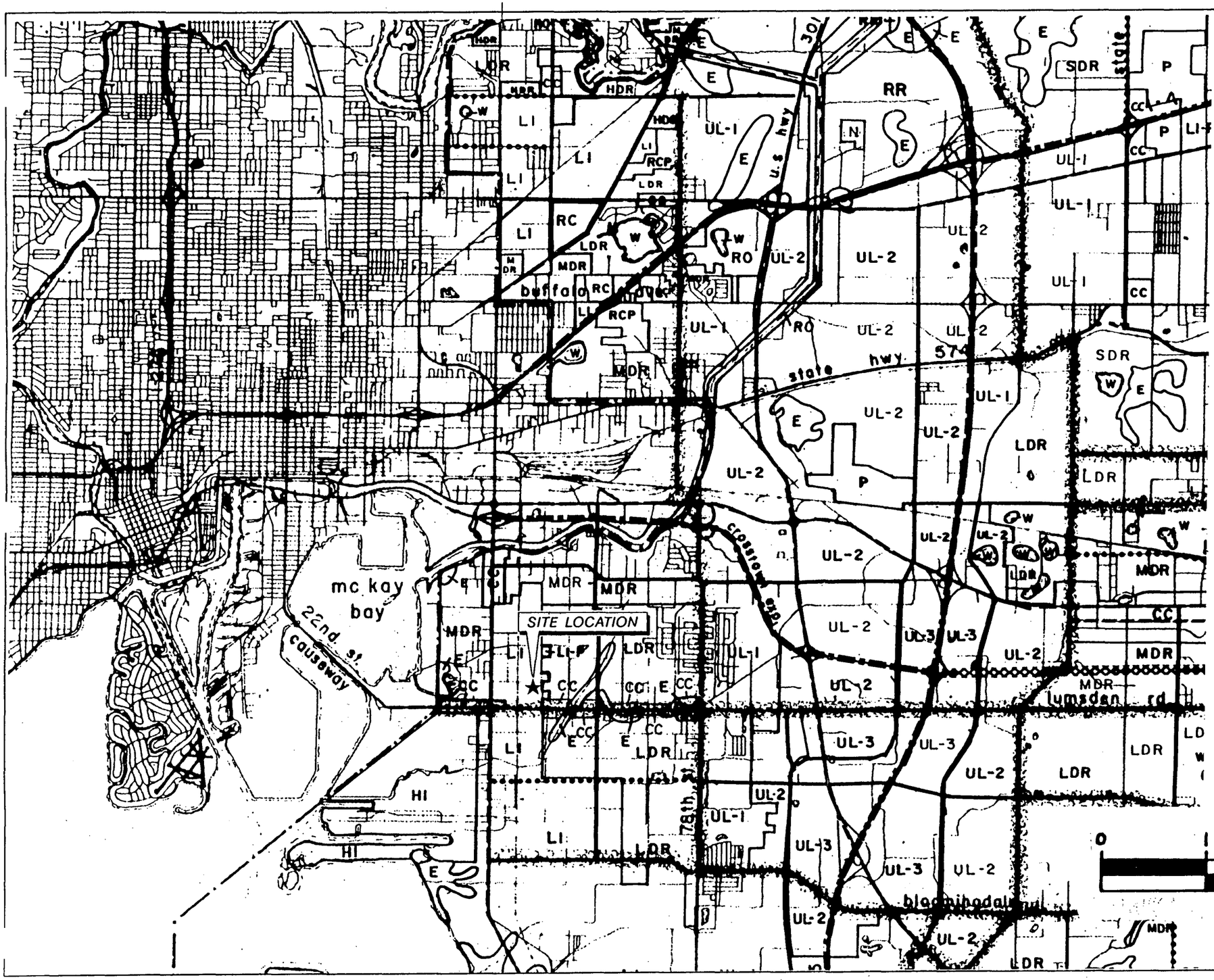

Figure I.B.4-3
Surrounding Land Use Map
Safety-Kleen Corp. Facility
Tampa, Florida

LEGEND

- A/M — AGRICULTURE/MINING (.05 du/a)
- A — AGRICULTURE (.10 du/a)
- A/R — AGRIGULTURAL/RURAL (.2 du/a)
- RE — RURAL ESTATE RESIDENTIAL (.4 du/a)
- RR — RURAL RESIDENTIAL (1 du/a)
- RR-P — RURAL RESIDENTIAL – PLANNED (1 du/a)
- LSDR — LOW SUBURBAN DENSITY RESIDENTIAL (2 du/a)
- LSDRP — LOW SUBURBAN DENSITY RESIDENTIAL PLANNED (2 du/a)
- SDR — SUBURBAN DENSITY RESIDENTIAL (4 du/a)
- LDR — LOW URBAN DENSITY RESIDENTIAL (6 du/a)
- LMDR — LOW/MEDIUM DENSITY URBAN RESIDENTIAL (9 du/a)
- MDR — MEDIUM DENSITY RESIDENTIAL (12 du/a)
- UL-1 — URBAN LEVEL 1 (12 du/a) URBAN LEVEL 1+, LIMITED (8 du/a)
- UL-2 — URBAN LEVEL 2 (20 du/a)
- HDR — HIGH DENSITY RESIDENTIAL (20 du/a)
- CC — COMMUNITY COMMERCIAL (20 du/a)
- CO — COMMERCIAL OFFICE (20 du/a)
- RC — REGIONAL COMMERCIAL (20 du/a)
- UL-3 — URBAN LEVEL 3 (50 du/a)
- E — ENVIRONMENTALLY SENSITIVE AREAS
- HI — HEAVY INDUSTRIAL
- LI — LIGHT INDUSTRIAL – PLANNED
- P — MAJOR PUBLIC
- RCP — RESEARCH/CORPORATE PARK
- RO — MAJOR RECREATION AND OPEN SPACE
- N — NATURAL PRESERVATION
- W — WATER
- EPGF — ELECTRICAL POWER GENERATING FACILITY

du/a = DWELLING UNITS PER ACRE

0 1 2 3 4

N

13112.09/31109LUM/021291

The ERM Group ®

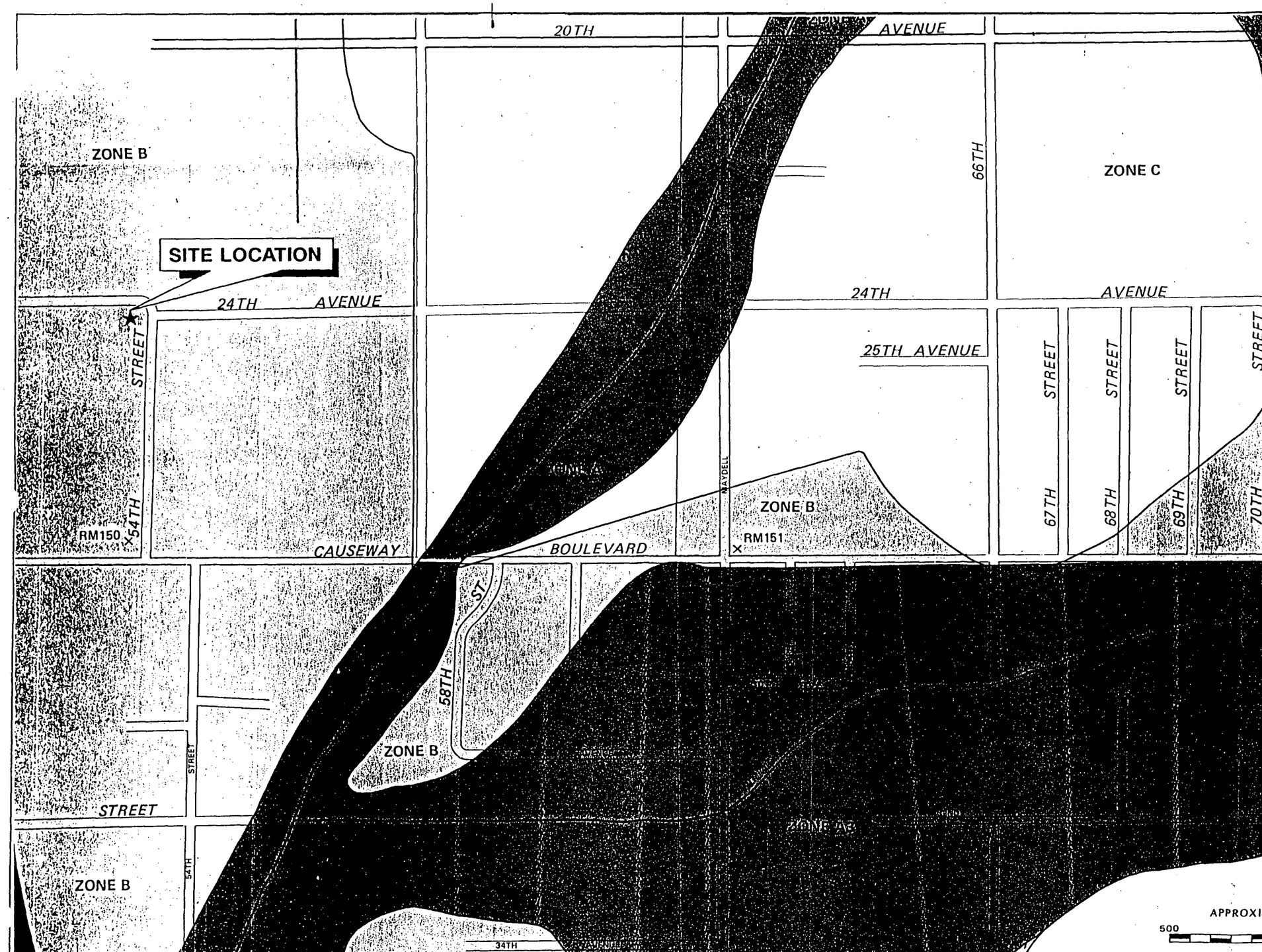

Figure II.A.1(a)-1
Flood Insurance Map
Safety-Kleen Corp. Facility
Tampa, Florida

KEY TO MAP

500-Year Flood Boundary	
100-Year Flood Boundary	ZONE B
Zone Designations*	
100-Year Flood Boundary	ZONE B
500-Year Flood Boundary	
Base Flood Elevation Line With Elevation In Feet**	513
Base Flood Elevation in Feet Where Uniform Within Zone**	(EL 987)
Elevation Reference Mark	RM7×
Zone D Boundary	
River Mile	•M1.5

**Referenced to the National Geodetic Vertical Datum of 1929

*EXPLANATION OF ZONE DESIGNATIONS

ZONE	EXPLANATION
A	Areas of 100-year flood; base flood elevations and flood hazard factors not determined.
A0	Areas of 100-year shallow flooding where depths are between one (1) and three (3) feet; average depths of inundation are shown, but no flood hazard factors are determined.
AH	Areas of 100-year shallow flooding where depths are between one (1) and three (3) feet; base flood elevations are shown, but no flood hazard factors are determined.
A1-A30	Areas of 100-year flood; base flood elevations and flood hazard factors determined.
A99	Areas of 100-year flood to be protected by flood protection system under construction; base flood elevations and flood hazard factors not determined.
B	Areas between limits of the 100-year flood and 500-year flood; or certain areas subject to 100-year flooding with average depths less than one (1) foot or where the contributing drainage area is less than one square mile; or areas protected by levees from the base flood. (Medium shading)
C	Areas of minimal flooding. (No shading)
D	Areas of undetermined, but possible, flood hazards.
V	Areas of 100-year coastal flood with velocity (wave action); base flood elevations and flood hazard factors not determined.
V1-V30	Areas of 100-year coastal flood with velocity (wave action); base flood elevations and flood hazard factors determined.

N

APPROXIMATE SCALE
500 0 500 FEET

The ERM Group ®

13112.09/31109FIM/021291

Figure II.A.1(a)-6
Stormwater Runoff
Safety-Kleen Corp. Facility
Tampa, Florida

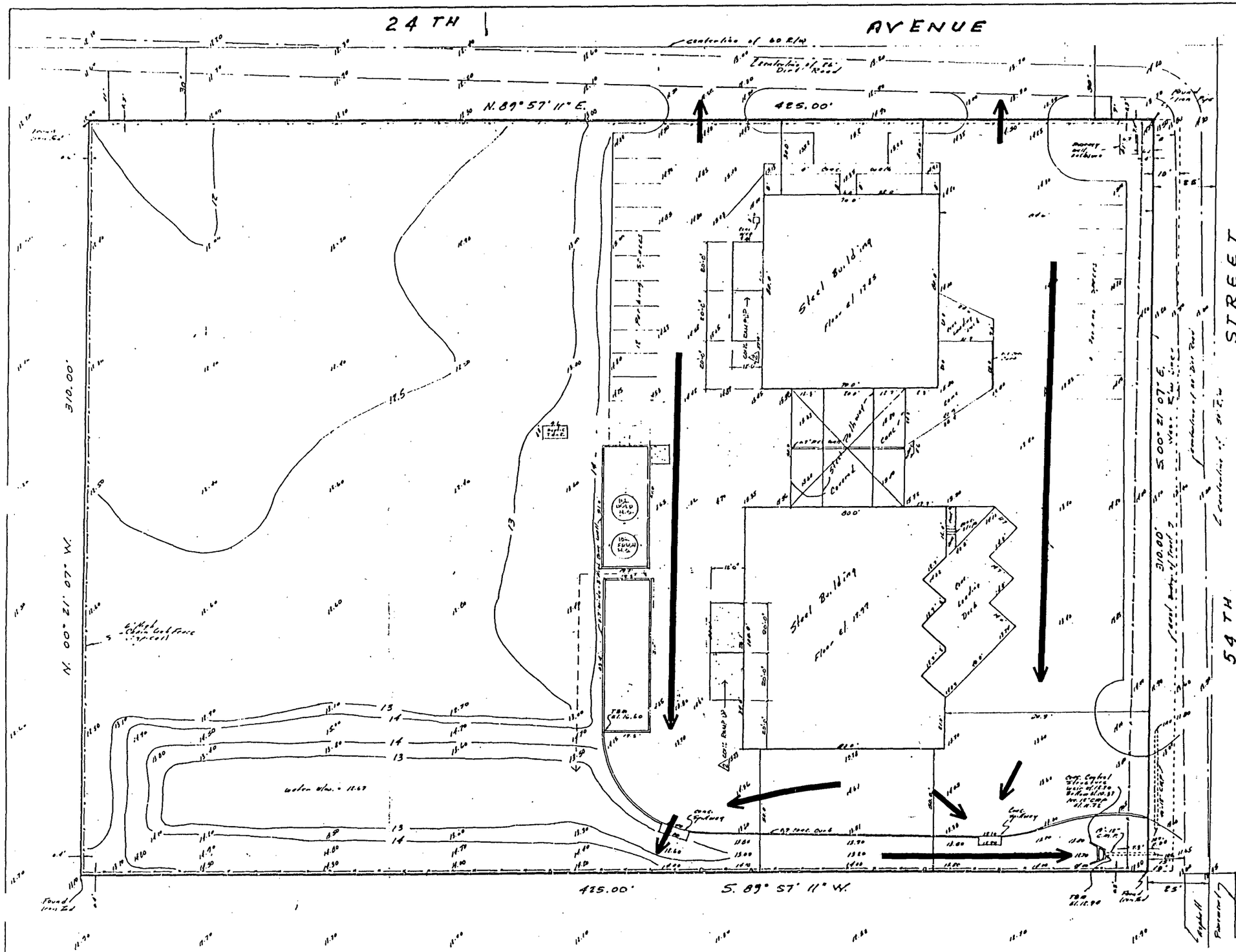

Notes: This Parcel as described is in zone "B" as defined by the National Flood Insurance Program. (Community Panel No. 120112 0367 C)

Bearings as indicated refer to an assumed meridian.

safety-kleen corp.
777 BIG TIMBER ROAD • ELGIN, ILLINOIS 60120 PHONE 312 697 8460

EXIST. SITE PLAN

SCALE 1"=20'-0"	REVISIONS	BY	DATE
DATE 9/15/87	1 REV. SUBSTATION WINE PITS	JD	4-28-88
	2 ADDED TANKS	JDP	7-19-91
FOR SERVICE ENTITLE DRAWING: TAMPA, FL. (9-103-21)		D12801	

Survey of: The West 425.00 feet of the East 435.00 feet of the North 110.00 feet of TRACT 9, in the Southwest 1/4 of Section 27, Township 29 South, Range 19 East, SOUTH TAMPA SUBDIVISION, according to map or plat thereof as recorded in Plat Book 6, Page 3 of the Public Records of Hillsborough County, Florida.

This certifies that we have made a survey of the above described property and that the survey and this plat conforms to the minimum technical standards set forth by the Florida Board of Land Surveyors, pursuant to Section 472.027, Florida Statutes.

August 28, 1987

JOHN KELLER & ASSOCIATES, INC.

For: Safety Kleen

JK Job No. P873581

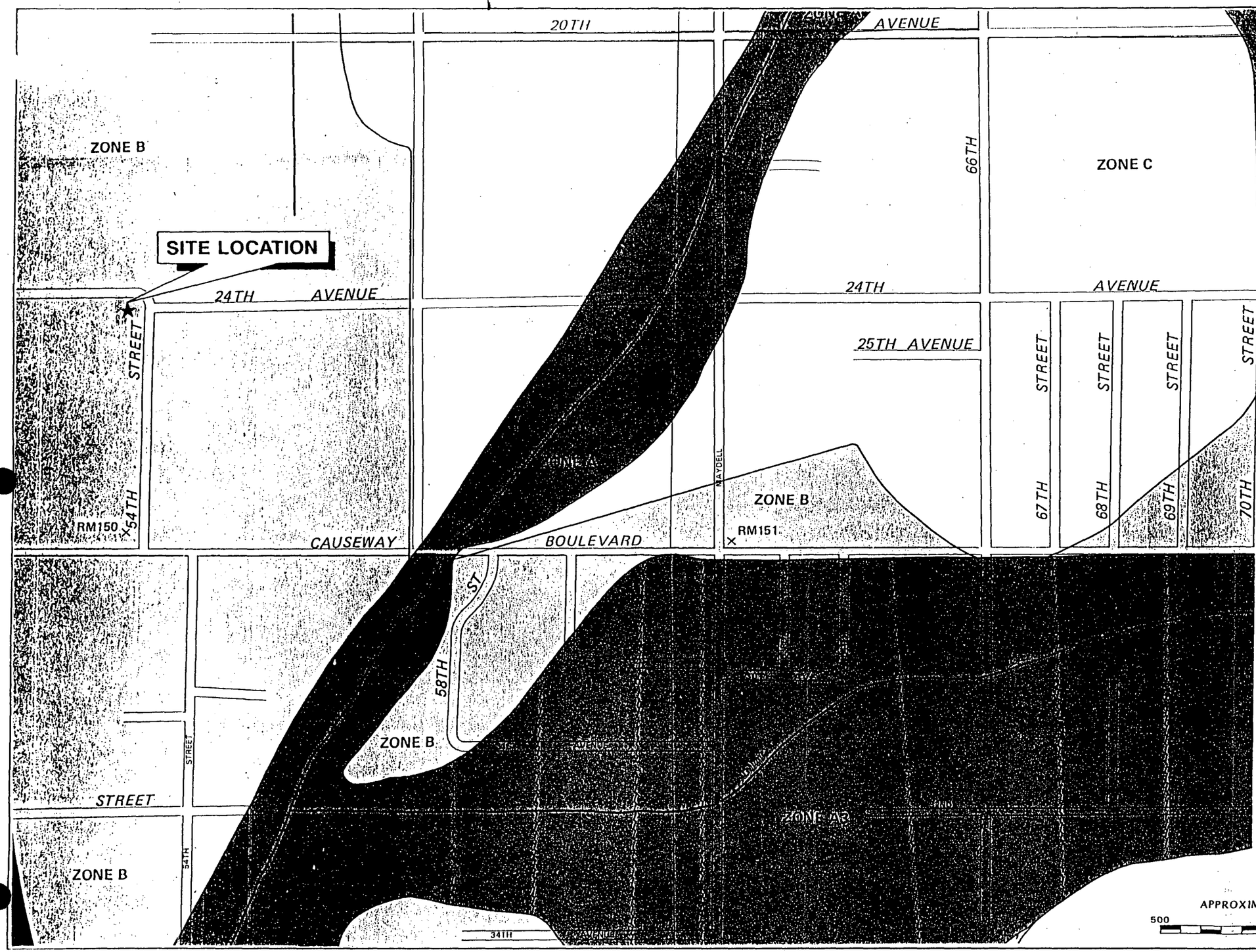

Figure II.A.3-1
Floodplain Map
Safety-Kleen Corp. Facility
Tampa, Florida

KEY TO MAP

500-Year Flood Boundary	
100-Year Flood Boundary	
Zone Designations*	ZONE B / ZONE B
100-Year Flood Boundary	
500-Year Flood Boundary	
Base Flood Elevation Line With Elevation In Feet**	513
Base Flood Elevation in Feet Where Uniform Within Zone**	(EL 987)
Elevation Reference Mark	RM7
Zone D Boundary	
River Mile	•M1.5

**Referenced to the National Geodetic Vertical Datum of 1929

*EXPLANATION OF ZONE DESIGNATIONS

ZONE	EXPLANATION
A	Areas of 100-year flood; base flood elevations and flood hazard factors not determined.
A0	Areas of 100-year shallow flooding where depths are between one (1) and three (3) feet; average depths of inundation are shown, but no flood hazard factors are determined.
AH	Areas of 100-year shallow flooding where depths are between one (1) and three (3) feet; base flood elevations are shown, but no flood hazard factors are determined.
A1-A30	Areas of 100-year flood; base flood elevations and flood hazard factors determined.
A99	Areas of 100-year flood to be protected by flood protection system under construction; base flood elevations and flood hazard factors not determined.
B	Areas between limits of the 100-year flood and 500-year flood; or certain areas subject to 100-year flooding with average depths less than one (1) foot or where the contributing drainage area is less than one square mile; or areas protected by levees from the base flood. (Medium shading)
C	Areas of minimal flooding. (No shading)
D	Areas of undetermined, but possible, flood hazards.
V	Areas of 100-year coastal flood with velocity (wave action); base flood elevations and flood hazard factors not determined.
V1-V30	Areas of 100-year coastal flood with velocity (wave action); base flood elevations and flood hazard factors determined.

N

APPROXIMATE SCALE
500 0 500 FEET

The ERM Group ®

Date	Symbol	Description	Drawn	Checked
2-10-87	-	RELEASED ECO 425	T.D	

RELEASED

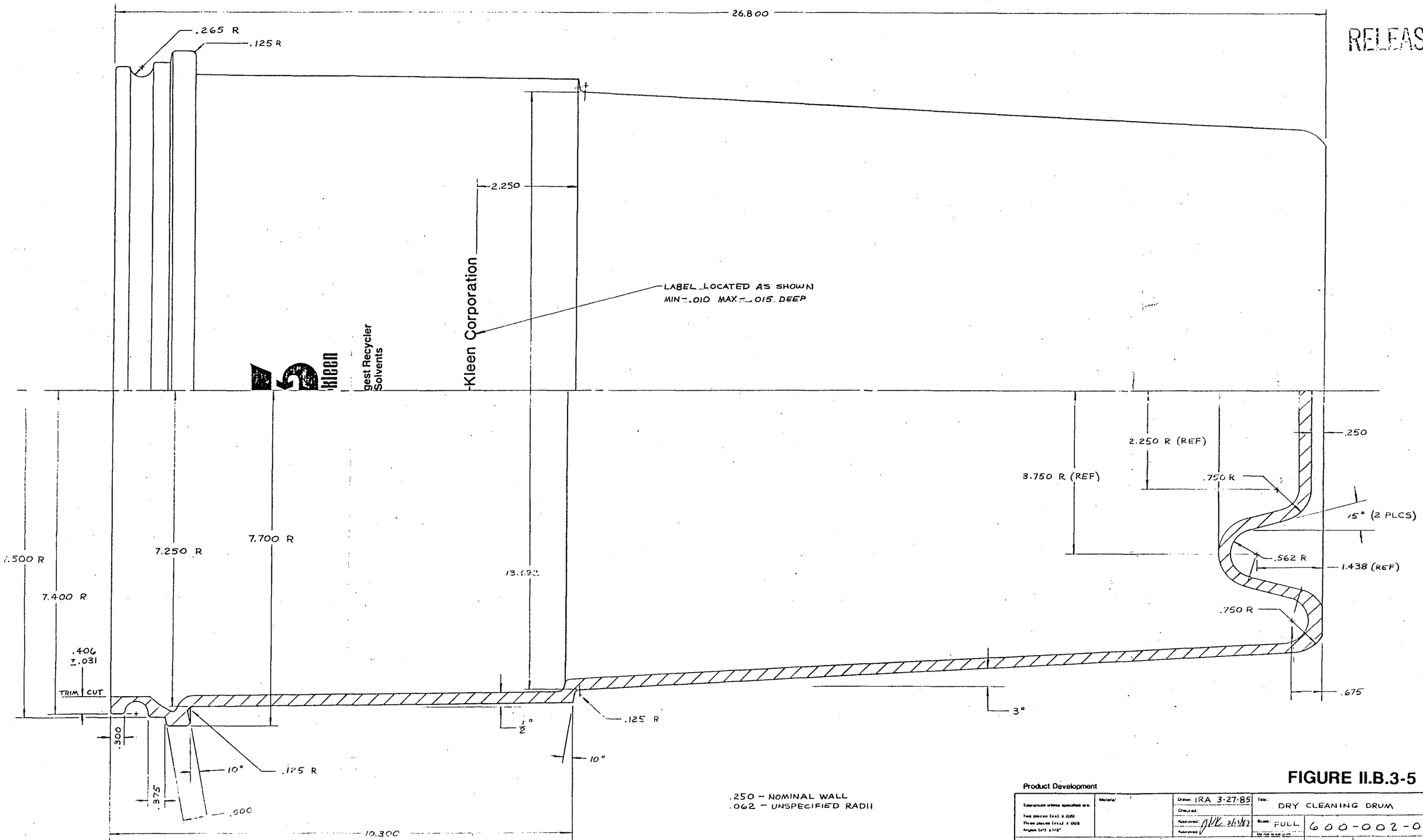

600-002-000-41

FIGURE II.B.3-5

Product Development

Tolerances unless specified are: Two places (xx) ± .020; Three places (xxx) ± .005; Angles (x°) ± 1/8°	Material:	Drawn: IRA 3-27-85; Checked: ; Approved: JHK 2/10/87; Approved:	Title: DRY CLEANING DRUM; Scale: FULL; Do not scale print; 600-002-000-41; Sheet 1 of 1; SK 3356

This drawing contains information proprietary to Safety-Kleen Corporation. Any disclosure or reproduction in part or in whole is expressly prohibited except by a written agreement from Safety-Kleen.

Safety-Kleen Corporation, 777 Big Timber Road, Elgin, Illinois 60120

Date	Symbol	Description	Drawn	Checked
2-1-87	-	RELEASED ECO 4-25		

RELEASED

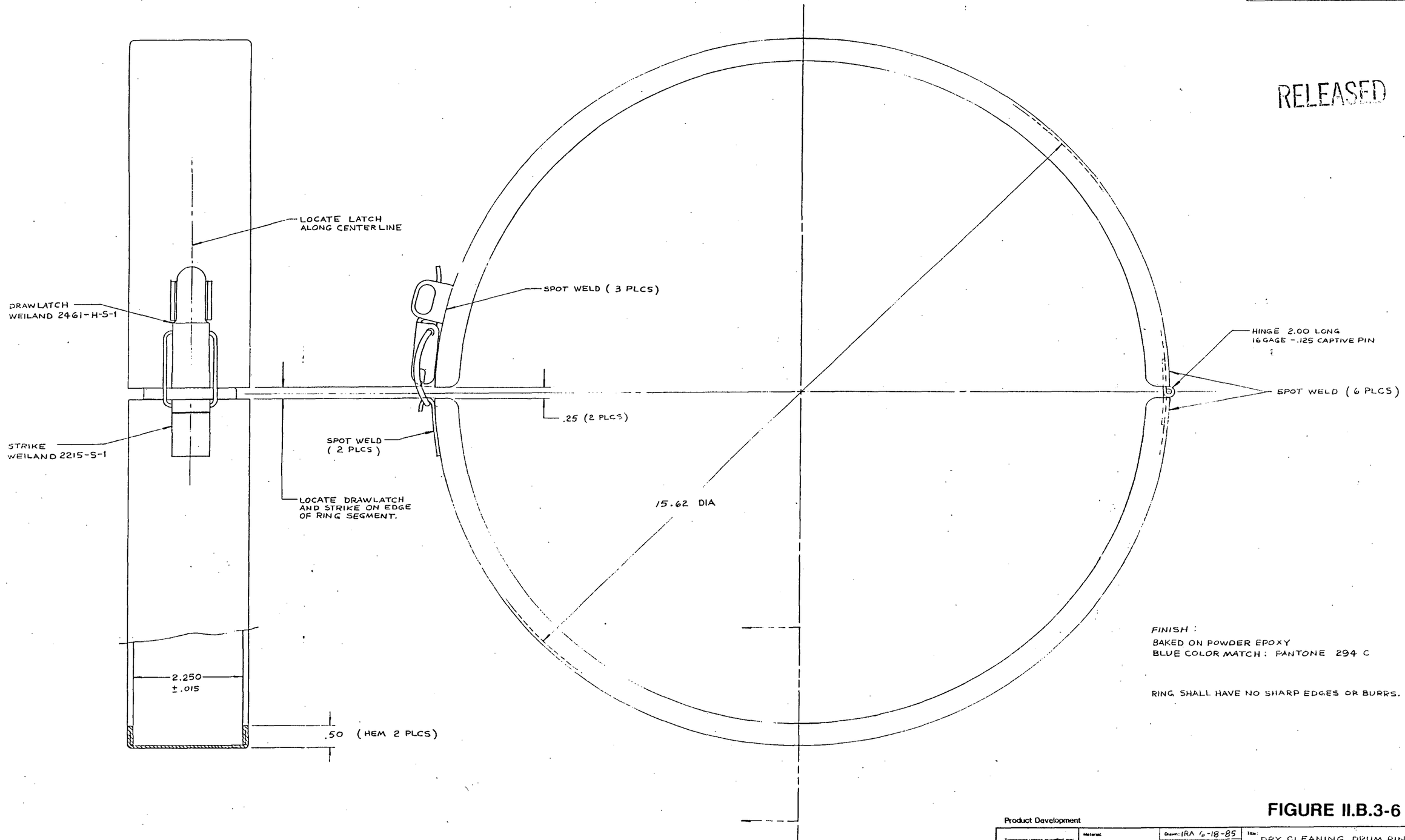

FINISH :
BAKED ON POWDER EPOXY
BLUE COLOR MATCH : PANTONE 294 C

RING SHALL HAVE NO SHARP EDGES OR BURRS.

600-004-200-41

FIGURE II.B.3-6

Product Development

Tolerances unless specified are: Two places (xx) ±.020 Three places (xxx) ±.005 Angles (x°) ±1/2°	Material: 16 GAGE CR STEEL	Drawn: IRA 6-18-85 Checked: T.D 6-18-85 Approved: [illegible] Approved:	Title: DRY CLEANING DRUM RING
			Scale: FULL Do not scale drawing	600-004-200-41
This drawing contains information proprietary to Safety-Kleen Corporation. Any disclosure or reproduction in part or in whole is expressly prohibited except by a written agreement from Safety-Kleen.			Sheet 1 of 1 Number:	SK 3358

Safety-Kleen Corporation, 777 Big Timber Road, Elgin, Illinois 60120

Date	Symbol	Description	Drawn	Checked
2-1987	-	RELEASED ECO 425	TD.	

RELEASED

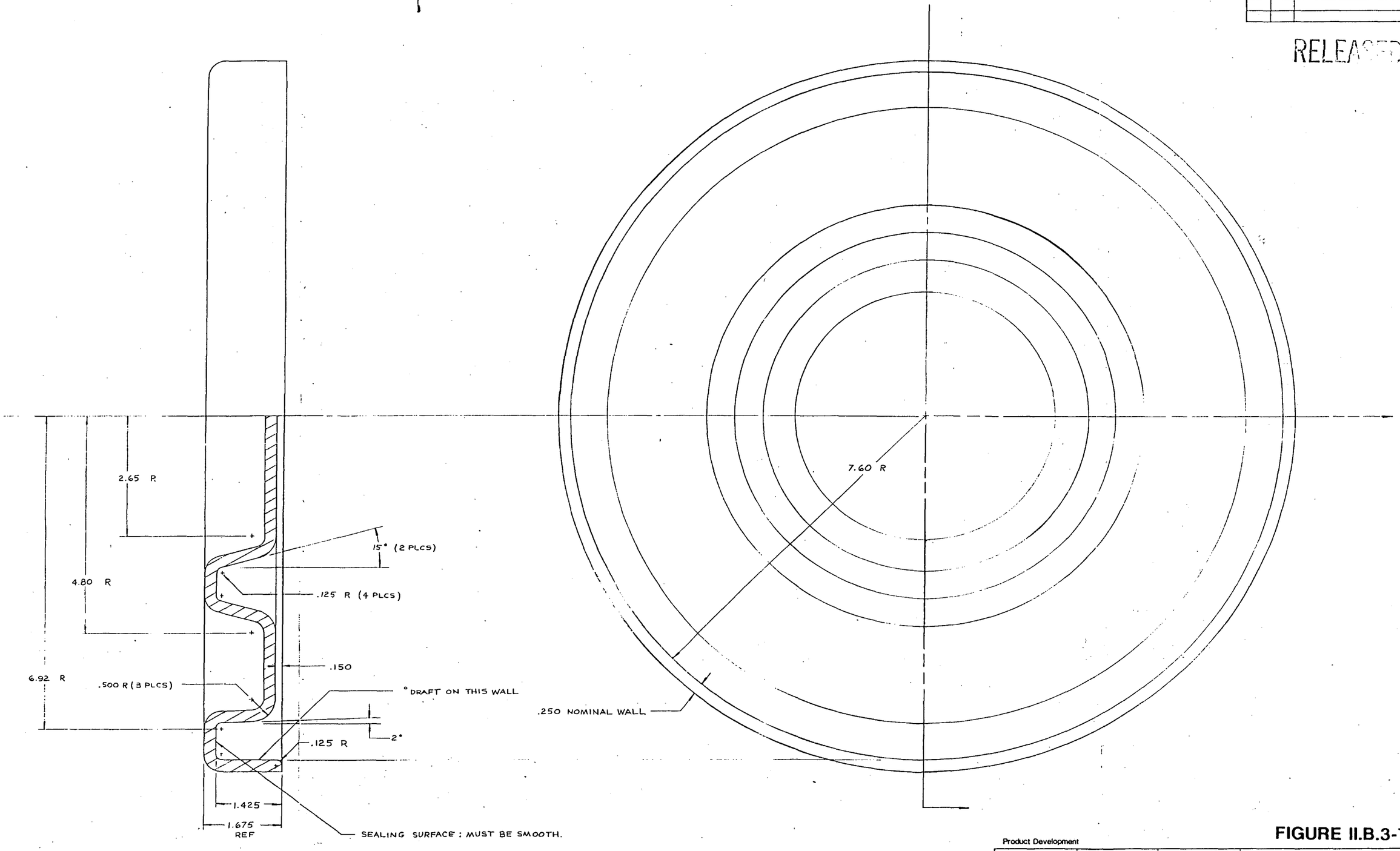

600-005-101-41

FIGURE II.B.3-7

Product Development

Tolerances unless specified are: Two places (xx) ± .020 Three places (xxx) ± .005 Angles (x°) ± 1/2°	Material: HIGH DENSITY POLYETHYLENE BLACK SMOOTH FINISH	Drawn: IRA 6-18-85 Checked: TJDL-18-85 Approved: 7/14/87 Approved:	Title: DRY CLEANING DRUM COVER
		Scale: FULL Do not scale print	600-005-101-41
The drawing contains information proprietary to Safety-Kleen Corporation. Any disclosure or reproduction in part or in whole is expressly prohibited except by a written agreement from Safety-Kleen.		Sheet 1 of 1	Revision: SK 3357

Safety-Kleen Corporation, 777 Big Timber Road, Elgin, Illinois 60120

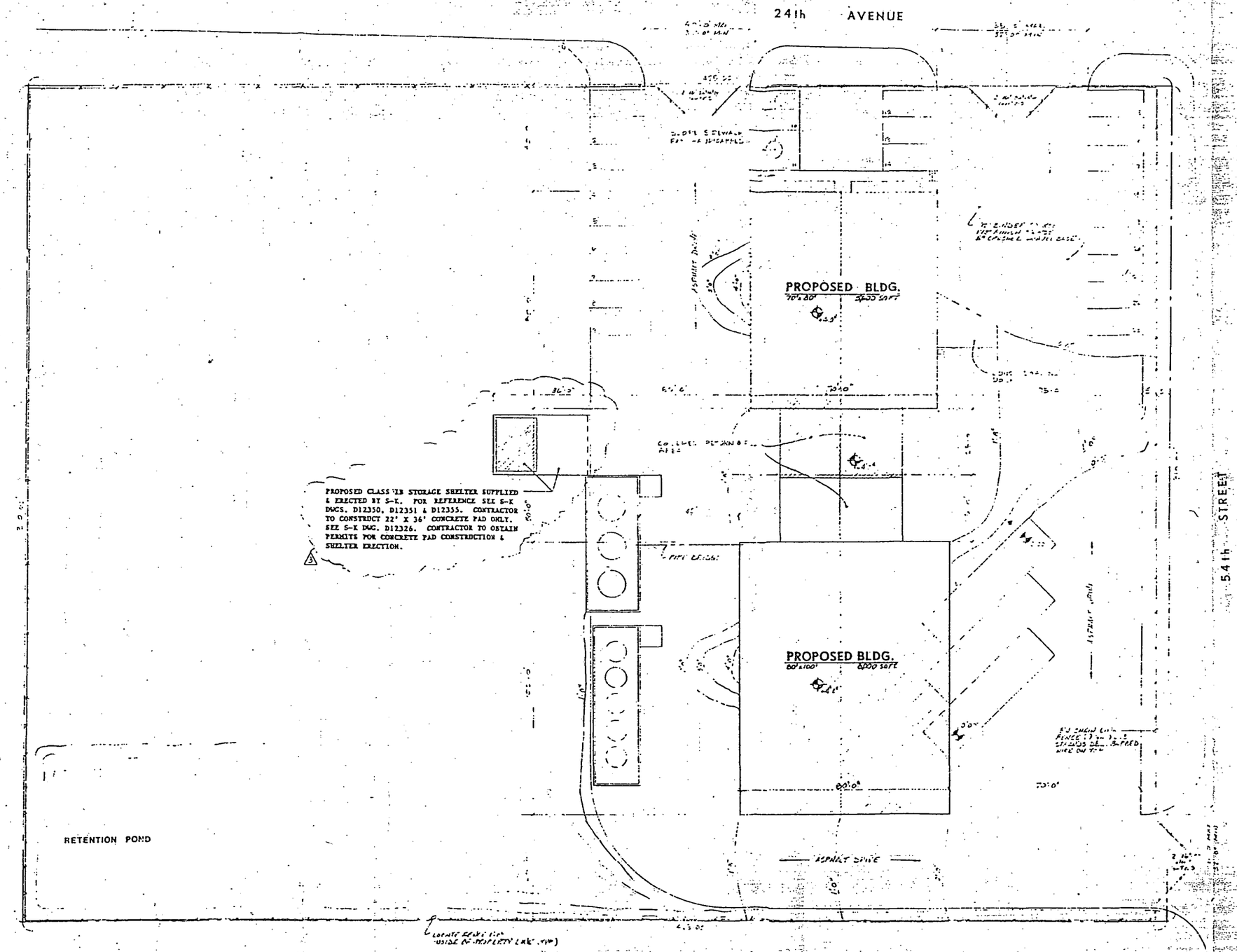

STATE OF ILLINOIS
WILLIAM
DAVID HEYN
062-33293
ILLINOIS
REGISTERED PROFESSIONAL ENGINEER

Plate 1

safety-kleen corp.

SITE PLAN

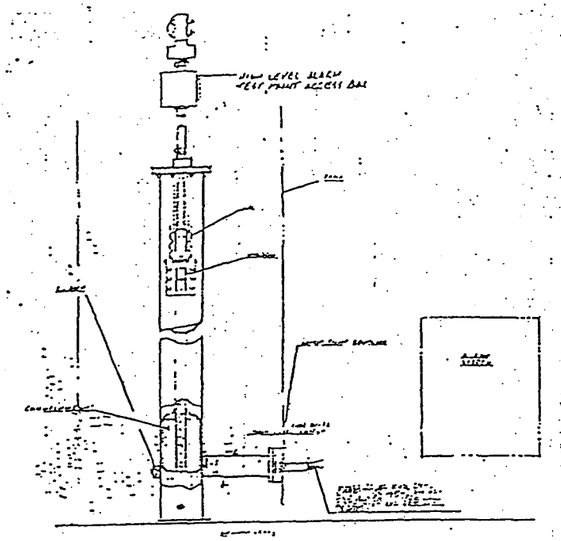

MODEL 7-S OR 9-S GAUGES

HIGH LEVEL ALARM PACKAGE SUPPLIED BY SAFETY-KLEEN

HIGH LEVEL ALARM INSTALLATION

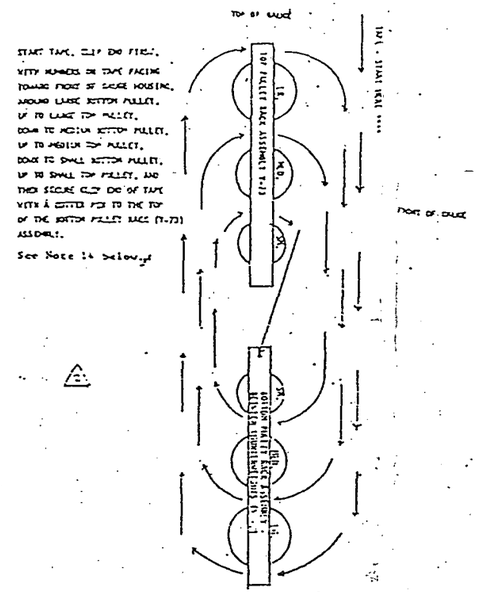

ENLARGED DETAIL SHOWING HOW TAPE IS WOUND ON PULLEY RACK ASSEMBLIES OF MOORMANN MODEL #7-S.
CUT OFF EXCESS TAPE AT FLOAT.

MATERIAL LIST
Model 7-S

For All Vertical Tanks Up To & Including 35'

☐ Material Supplied by CONTRACTOR

1. Gauge Housing Base Support.
2. 1" Galvanized Pipe (cut to length).
3. Tank Roof Flange.
4. 2" Tank Opening Pipe.
5. 2" Galvanized Pipe (cut to length).
6. 1" Galvanized Nipple (any length).
7. 1" Galvanized Union.

○ Material Supplied by Moormann Bros. (SAFETY-KLEEN)

	PART NAME	PART NO.	QUANTITY PER UNIT
8.	Observation Window Assembly	A-34—A-38	1
9.	Float	V-75.	1
10.	Stainless Steel Tape Clamp & Screw	V-93	1
11.	Elbow Assembly Complete	A-30, A-33	2
12.	2" to 1" Reducing Bushing		1
13.	Eccentric Cap Complete with Nuts & Bolts	V-71	1
14.	Pulley Rack Assembly	V-72	2
15.	Luflexin Stainless Steel High Visibility Tape	V-49	1
16.	Rust-Proofed Steel Gauge housing	V-77	1
17.	Counterweight	V-72	2
18.	Condensation Drain Plug		1
	Frame & Lid Assembly for Observation Window	A-34, A-38	1
	Gaskets - Set for Observation Window	V-81, V-82	1
	Gasket - Elbow Cap	V-83	2
	Gasket - V-71 Eccentric Cap	V-84	1
	Glass - Window	V-86	1
	Stainless Steel Indicator Finger for Observation Window	V-94	1
	Wire Pin - Stainless Steel	V-96	5

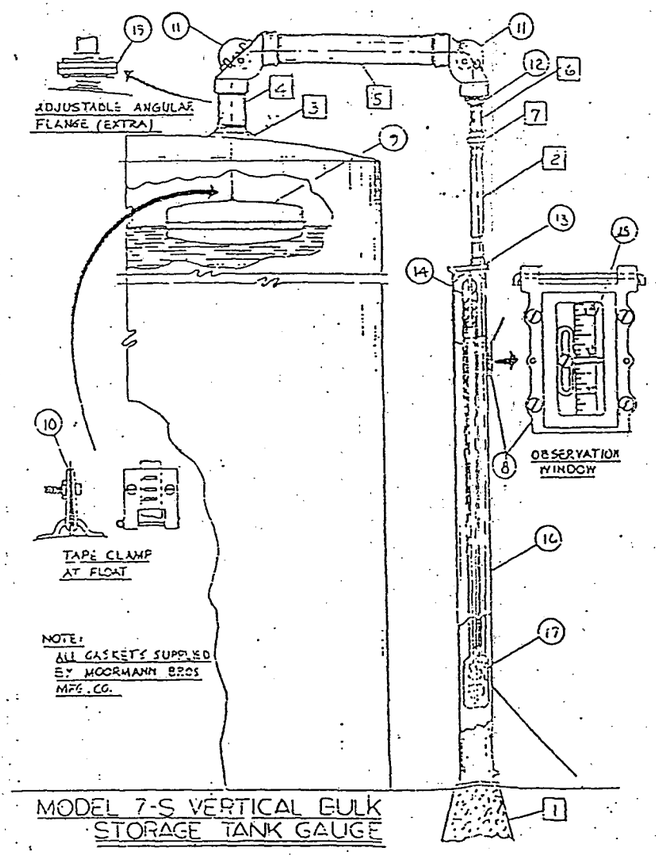

MODEL 7-S VERTICAL BULK STORAGE TANK GAUGE

INSTALLATION INSTRUCTIONS - MODEL 7-S

1. Locate gauge common on ground — mark top edge of tank directly above ground location
2. Measure, cut and thread 2" pipe (as marked on print).
3. Use pipe dope on all connections.
4. Assemble both A-30 elbows and 2" pipe as shown on print.
5. Screw (1) elbow A-30 onto 2" pipe with reducing bushing, close nipple and union as shown on print; other A-30 elbow onto 2" nipple in tank then screw other end of 2" pipe into tank elbow, make straight with tank marking.
6. Level 2" pipe, use temporary wood brace or alignment flange, if necessary
7. Set gauge housing with eccentric cap assemblies on ground directly below overhanging elbow.
8. Measure for 1" pipe (reducing bushing in elbow to eccentric cap V-71 on gauge housing) allow for threads, cut and thread 1" pipe.
9. Screw 1" pipe into elbow, then remove V-71 eccentric cap from housing and put on 1" pipe. CAUTION — Be sure eccentric cap is straight and 1" outlet is furthest away from tank.
10. Fasten pulley rack with large pulley up to eccentric cap using stainless steel pins.
11. Assemble other pulley rack in counterweights with large pulley down.
12. Place counterweight on ground directly beneath eccentric cap pulley rack.
13. Remove A-33 elbow from both elbows.
14. Thread tape from tank, elbow with numbers up and dia ends first through 2" pipe and over elbow pulleys down through 1" pipe and out eccentric cap, straight down and around bottom pulley in C/W and up and over top pulley on eccentric cap, down to medium pulley up and over medium pulley, down and around small pulley on C/W and up and around small pulley on eccentric cap, down and fasten to lug on counterweight pulley rack—use stainless steel pin. CAUTION—Do not thread tape over or under cross bars in pulley rack. Use caution—do not kink or bend tape.
15. Fasten tape to float with tape clamp (as per print) CAUTION — Do not fasten tape clamp too tight as this may damage tape.
16. Place eccentric cap gasket on housing top and insert counterweight assembly into housing. CAUTION — Do not allow C/W to drop or tape is this may cause damage to bearings, also be sure the tape is in groove of pulleys and not on the edge.
17. Fasten housing to eccentric cap with observation window directly below 1" pipe.
18. Place outside strand of tape over tape guide in observation window. CAUTION — Do not bend or kink tape, and cut ONLY ONE (1) strand of tape over the tape guide.
19. If tank is empty adjust tape reading at 1-3/8" (Float draft) If it is partially full set reading exactly with tape, make minor tape reading adjustments with the float by sliding tape through tape clamp. Minor adjustments (within 1" make with conversion factor).
20. In setting the reading on the gauge, ½", ¼" or even 1/8" is not close enough, be particular, set gauge to the exact amount of liquid in tank.
21. CAUTION — Let flow down in tank easily. Do not let it drop.
22. Assemble observation frame and lid A-34—A-38 place on housing, tighten for vapor-proofing
23. Fix base for housing either, concrete, wood post, or steel plate welded to tank. CAUTION — Do not weld gauge housing to tank.
24. In most climates, condensation forms inside the tank and gauge. A drain plug has been provided for draining at the bottom of housing. In most climates this is necessary 2 times a year (spring & fall) however, in extreme cases draining is required more often.

GENERAL NOTES

1. TANK GAUGE ASSEMBLY SUPPLIED BY SAFETY-KLEEN CORP.
2. SEE INDIVIDUAL SERVICE CENTER SITE PLANS FOR LOCATION OF THE INSTALLATION.
3. GAUGE MUST BE ORDERED WITH THE PERFORATED TAPE FOR FUTURE REMOTE READ-OUT SYSTEM.
4. HIGH/LOW LEVEL ALARM SWITCH INFORMATION, MATERIAL LIST & INSTALLATION INSTRUCTIONS INCORPORATED ONTO DRAWING.
5. IF REQUIRED, ADDITIONAL VERBAL INSTALLATION INSTRUCTIONS CAN BE OBTAINED BY CALLING MOORMAN BROS. MFG. CO., RUSHVILLE, INDIANA - (317) 932-3590 - ASK FOR: BOB GAINES OR JIM RAVENCRAFT

A-5

REV	DESCRIPTION	DATE	BY
6	ADDED SECTION "A-A" FOR MS	20	[illegible]
5	ADDED INDICATOR HIGH LEVEL ALARM INFO.	27	[illegible]
4	ADDED TAPE WINDING INFO ABOVE	[illegible]	[illegible]
3	ADDED NOTE 5	[illegible]	[illegible]
REV	DESCRIPTION	DATE	BY

Safety-Kleen Corp.

MOORMANN BROS. TANK GAUGE INSTALLATION

SCALE: NONE

For Service Center Branch

A1024

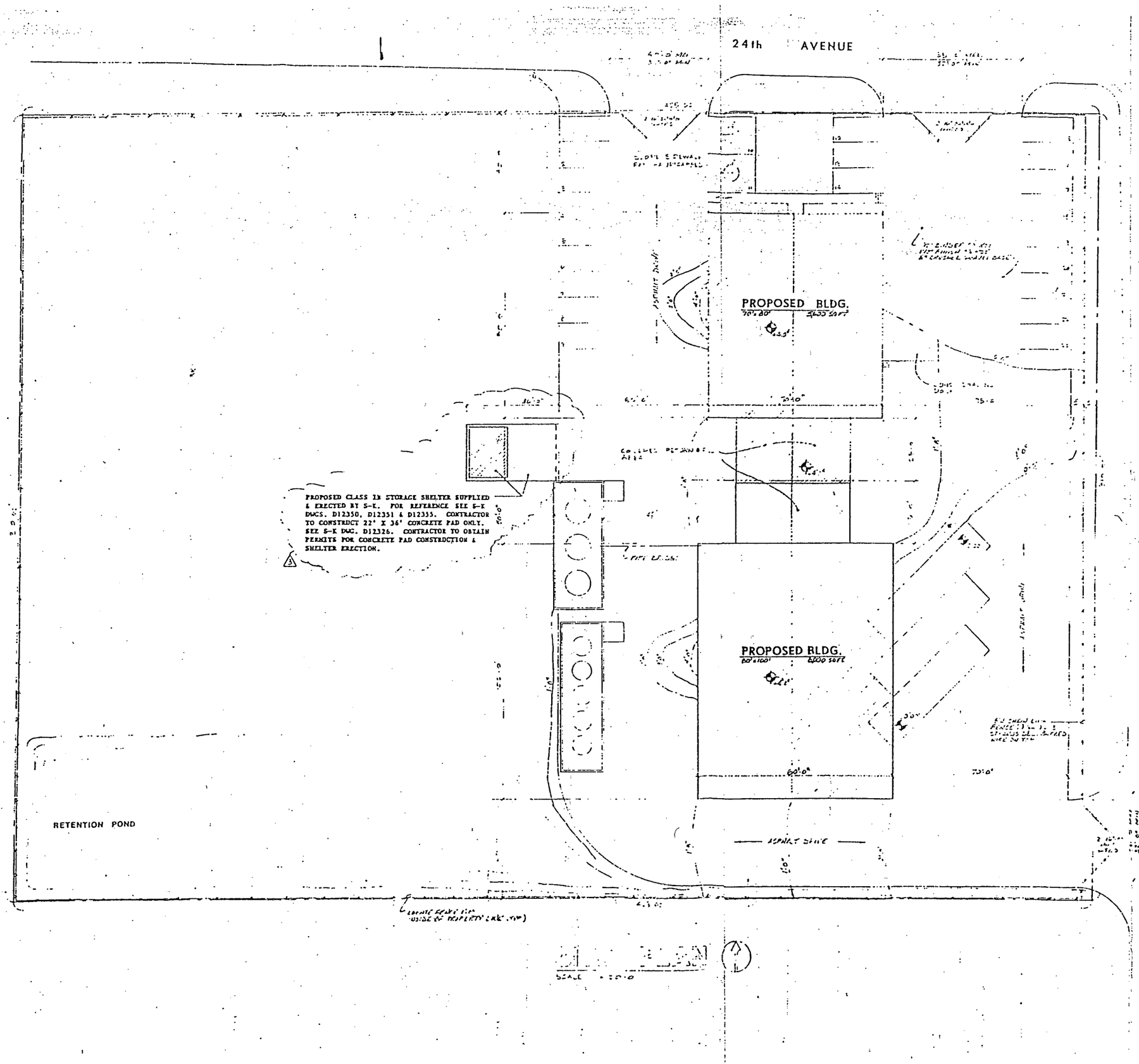

STATE OF ILLINOIS
WILLIAM DAVID REYN
62-35293
ILLINOIS
REGISTERED PROFESSIONAL ENGINEER

Plate 1

safety-kleen corp.

SITE PLAN

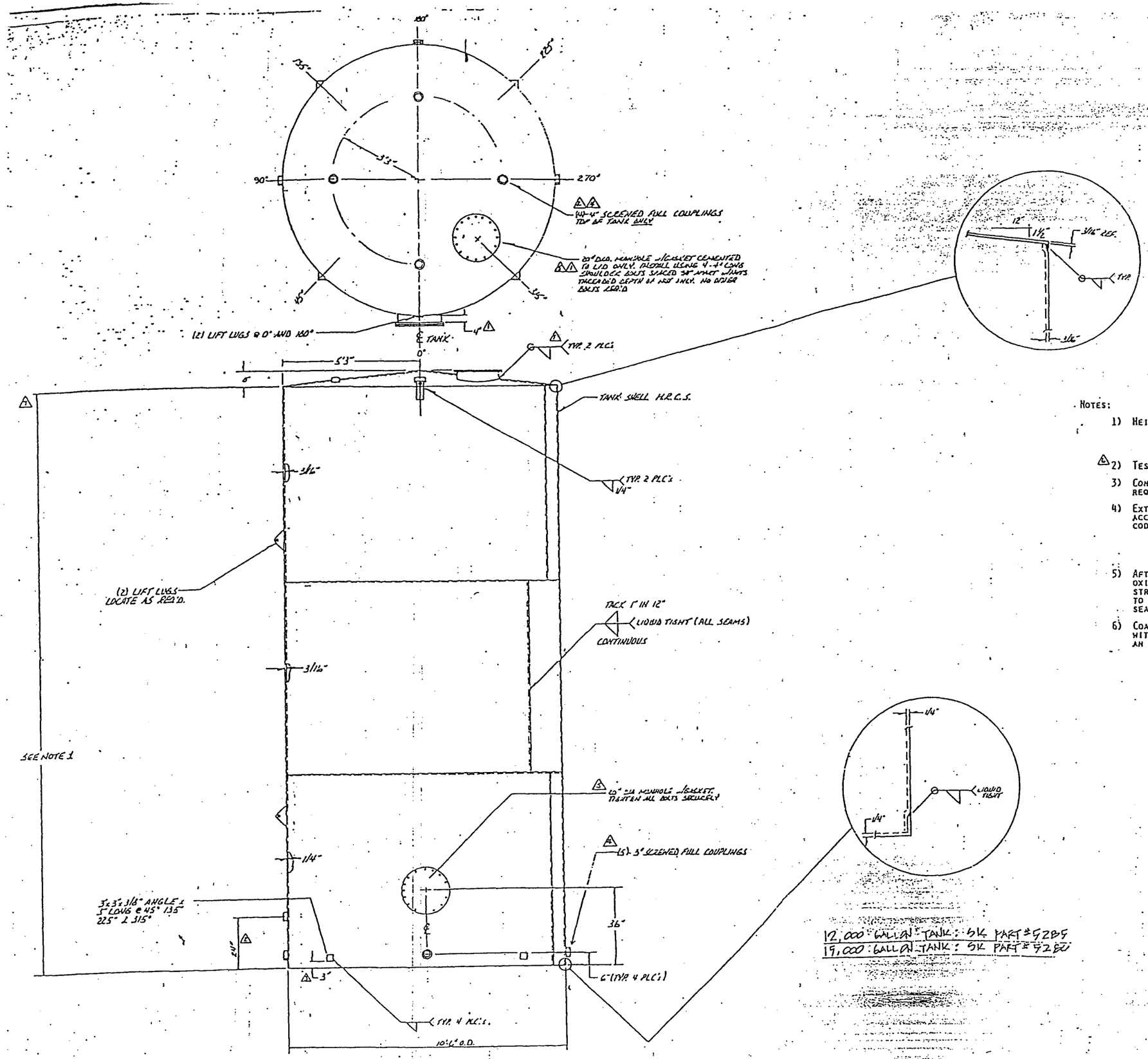

12,000 GALLON TANK: 5K PART #5285
19,000 GALLON TANK: 5K PART #5280

Notes:

1) Height of tank will depend on gallonage
   A) 12,000 gal. - 18'7"
   B) 15,000 gal. - 23'3"
2) Test pressure to be 2 P.S.I. air min. & 5 P.S.I. max.
3) Construction to meet "Underwriters Laboratories" requirements and so labeled.
4) Exterior of tank surface only to be prepared in accordance with "Steel Structure Painting Council" code #SSPC-SP3-63T.
   A) Remove loose rust & mill scale by sandblasting & power tool wire brushing and grinding.
5) After surface preparation, apply (1) coat of white oxide paint and (2) coats of alkyd base gloss white structural enamel, e.g. Mobil 12-A-4. Allow paint to dry 16-24 hours between coats to insure proper sealing.
6) Coat bottom of tank (exterior only) add 4" up sides with Buffhide or Mobil Gilso-Mastic #55-J-8 or an equivalent.

Plate 2

4	MOVED DIMENSION	C.S.	1-22-86
3	TANK TEST PRESSURES WERE 5 MIN. & 7 MAX.	RD	4-4-85
2	[illegible]	RD	4-4-85
1	[illegible]	RD	3-4-85
REV	DESCRIPTION	BY	DATE

safety-kleen corp.

12,000 OR 15,000 GAL. ABOVEGROUND VERTICAL TANK FABRICATION DETAILS

12"=1'-0"			
4-12-82	[illegible]		
RD	[illegible]	RD	
	[illegible]	RD	

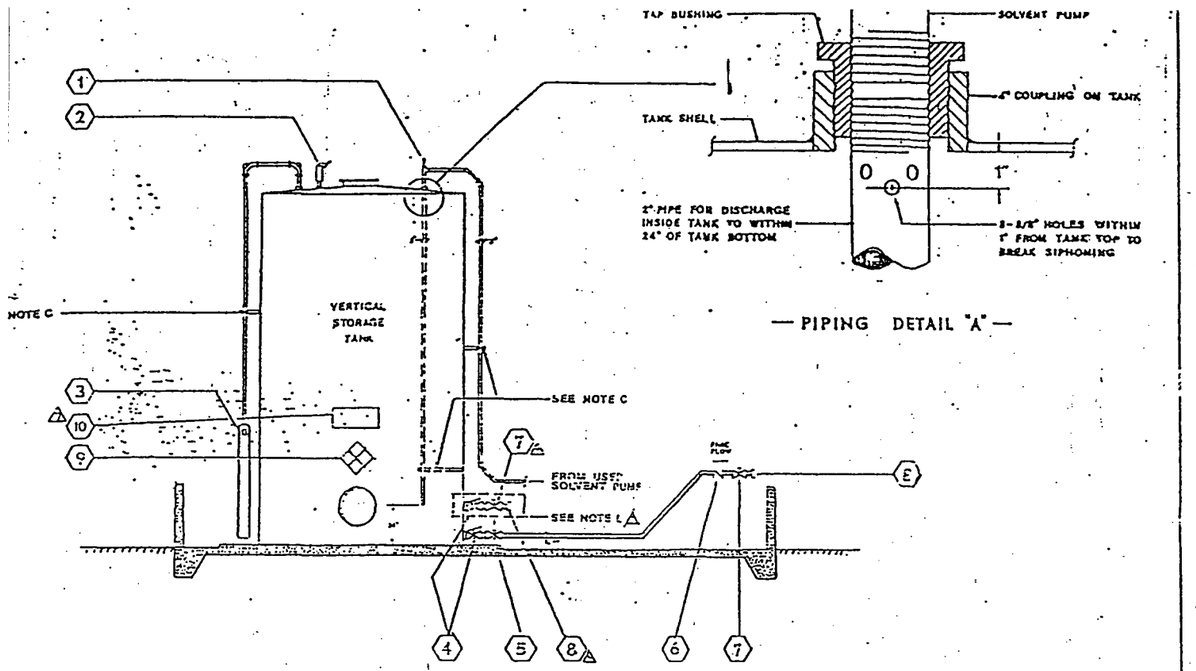

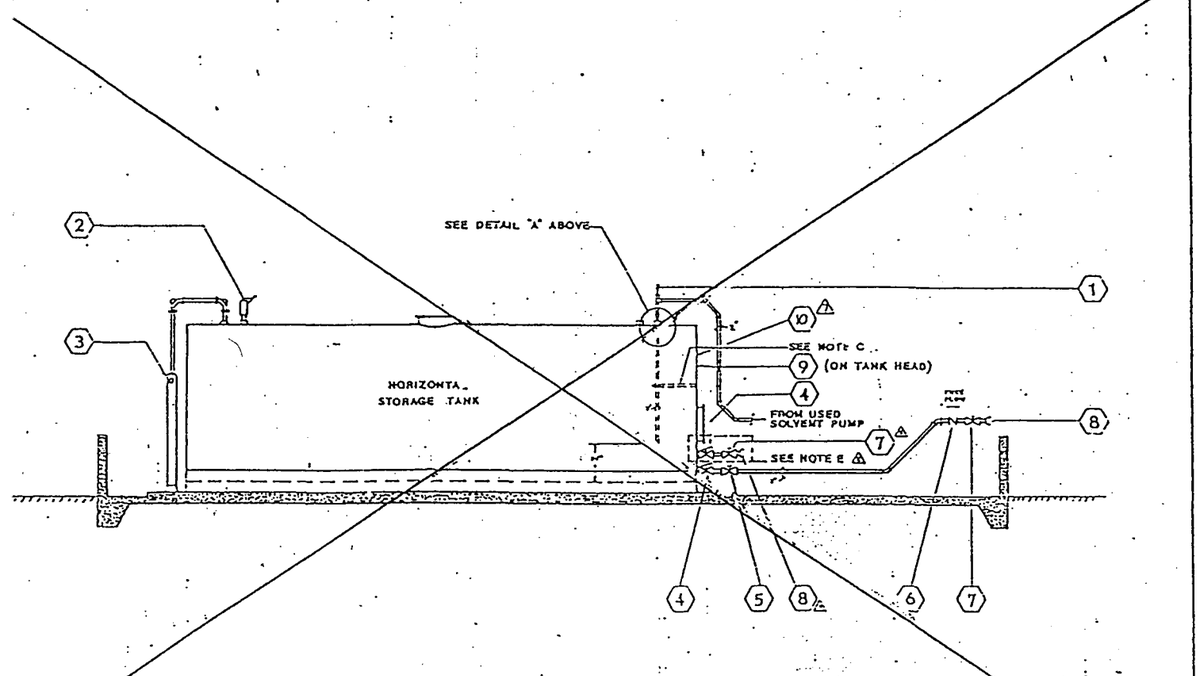

NOTE: WHEN HORIZONTAL TANKS ARE USED A 3" NIPPLE IS REQUIRED BETWEEN THE INTERNAL EMERGENCY & GATE VALVE

— EQUIPMENT / FIXTURE SCHEDULE —

	MARK	SIZE	DESCRIPTION	S/K PART NO.	REMARKS
	1	3/8"	3/8" AUTOMATIC VACUUM BREAKERS MORRISON BROS. FIG. 134-A	5274	—
	2	3"	3" SCREWED PRESSURE/VACUUM VENT MORRISON BROS. FIG. 548 (2 OZ. PRESSURE - 1 OZ. VACUUM)	5339	—
	3		TANK GAUGE - MOORMAN BROS. MODEL NO. 7-S	5277	SEE INSTALLATION DETAILS ON SAFETY-KLEEN DWG. A10243
	⬡				
	4	3"	3" INTERNAL EMERGENCY VALVE MORRISON BROS. FIG. 272-HG W/212°F FUSIBLE LINK	5267	SEE INSTALLATION DETAILS ON SAFETY-KLEEN DWG. C11302 △4
	5	3"	3" DUCTILE IRON GATE VALVE W/ROUND FLANGED ENDS - MORRISON BROS. FIG. [illegible]	5276	SEE INSTALLATION DETAILS ON SAFETY-KLEEN DWG. C11302 △4
	6	3"	3" BRONZE CHECK VALVE - MORRISON [illegible]	[illegible]	—
	7	3"	3" BRONZE GATE VALVE - MORRISON BROS. FIG. 235-B LOCKING TYPE	5265	—
	8	3"	3" ALUMINUM CAMLOCK QUICK COUPLING - MORRISON BROS. MALE ADAPTER PART F W/DUST CAP & CHAIN	5264	COUPLING TO BE INSTALLED SIX (6) INCHES ABOVE DIKE WALL
△	9	—	NFPA MATERIAL IDENTIFICATION PLACARD	2453	DISPLAY IN PLAIN SIGHT ABOVE DIKE WALL
△	10	—	"COMBUSTIBLE-KEEP FIRE AWAY" SIGN	5120T	" " " " " "

— GENERAL NOTES —

(A) THIS DRAWING SUPERCEDES SAFETY-KLEEN CORP. DRAWINGS C10235 & C10236.

(B) SEE INDIVIDUAL SERVICE CENTER SITE PLANS FOR DIKE DIMENSIONS AND RELATED INFORMATION AND ALSO LOCATION AND ARRANGEMENT OF THESE PIPING DETAILS.

(C) ALL PIPING TO BE SCHEDULE 40 GALVANIZED AND BE SUPPORTED EVERY EIGHT (8) RUNNING FEET - CONTRACTOR TO SUPPLY ALL BRACKETS, CLAMPS, ETC. AS REQUIRED FOR SUPPORTING PIPE - ALL EXPOSED THREADS AT JOINTS TO BE PAINTED WITH A RUST RESISTANT EXTERIOR GRADE PAINT. PIPING SUPPORT HARDWARE TO BE UNISTRUT BRAND OR APPROVED EQUIVALENT.

(D) ALL DIRECTION CHANGES IN DIRTY SOLVENT LINES TO BE MADE USING A COMBINATION OF 45° ELBOWS OR LONG SWEEP 90° ELBOWS.

△4△1 (E) THIS INSTALLATION TO BE MADE WHERE NEW TANKS ARE TO BE INSTALLED AT ANY LOCATIONS PRONE TO FREEZING. SEE INSTALLATION DETAILS ON SAFETY-KLEEN DWG. C11302

△3 (F) ALL ITEMS WITH SAFETY-KLEEN PART NO. REFERENCES WILL BE SUPPLIED TO CONTRACTOR.

Plate 3

NO.	REVISION DESCRIPTION	BY	DATE
△1	ADDED NOTE	C.S.	[illegible]
△3	CHANGED PART NO. FROM 5212 TO 5277	[illegible]	[illegible]
△2	ADDED "COMBUSTIBLE" SIGN	C	[illegible]
△3	REV. GEN. NOTES NO. SYSTEM TO LETTERS	CS	[illegible]
△1	REMOVED 3" PLUG - ADDED VALVE/CAMLOCK	WLJ	[illegible]
△1	ADDED ITEM 8 TO SCHEDULE & DRAWING	WLJ	[illegible]
△1	ADDED NOTE F	WLJ	[illegible]
△1	REVISED DETAIL IN NO. E E SHOWN ON DWG.	WLJ	[illegible]
△1	ADDED NOTE E TO NOTES & TO DRAWING	WLJ	[illegible]

safety-kleen corp.

EXHIBIT 2-7

USED SOLVENT STORAGE TANK INSTALLATION DTL'S

NO SCALE

FOR: SERVICE CENTER BRANCH IMPROVEMENTS F/OR CONSTRUCTION

D 111234

THIS DRAWING CONTAINS INFORMATION PROPRIETARY TO SAFETY-KLEEN CORP. ANY REPRODUCTION, DISCLOSURE OR USE OF THIS DRAWING IS EXPRESSLY PROHIBITED EXCEPT BY SAFETY-KLEEN OR AS SAFETY-KLEEN MAY AGREE IN WRITING

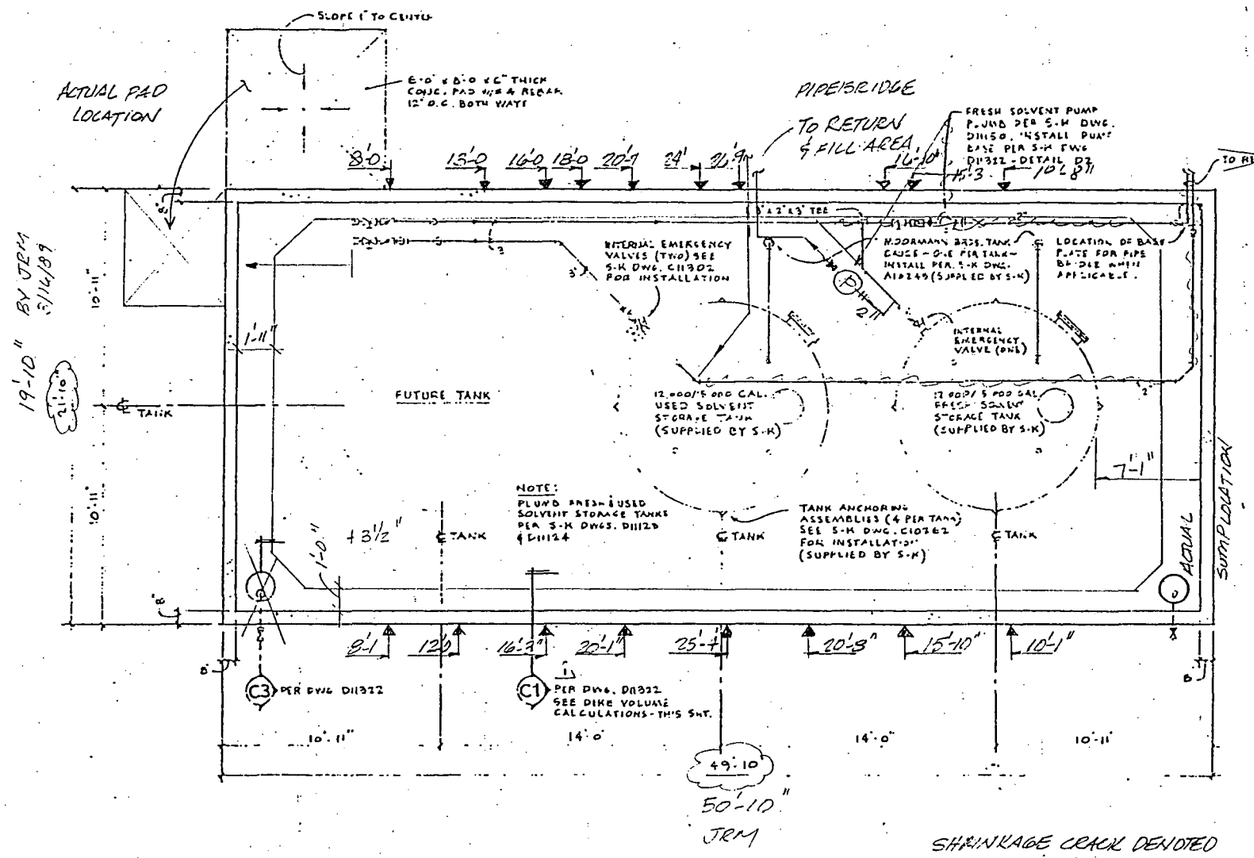

SHRINKAGE CRACK DENOTED AS THUS : 12'-0

TANK FARM PLAN

SCALE: 1/4" = 1'-0"

NOTES

1. HIGH LEVEL ALARM TO BE INSTALLED PER SAFETY-KLEEN DWGS. D11333, D11334 & D11339.
2. ALL DWGS, SUPPLIED TO CONTRACTOR CONTAINING S-K PART # REFERENCES, THESE ITEMS WILL BE SUPPLIED BY SAFETY-KLEEN.
3. S-K = SAFETY-KLEEN CORP.

DIKE VOLUME CALCULATION - 12,000 GAL. STORAGE TANK (DIKE HT. 2'-6")

FORMULAE USED:

$(\pi r^2 H)(7.48 \text{ GAL./CU. FT.})$ = TANK DISPLACEMENT VOLUME (GAL.)
$(LWH)(7.48 \text{ GAL./CU. FT.})$ = DIKE VOLUME (GAL.)

r (TANK RADIUS) = 5.25 FT. (5'-3")
L (DIKE LENGTH) = 48.5 FT. (48'-6" I.D.)
W (DIKE WIDTH) = 20.5 FT. (20'-6" I.D.)
H (DIKE HEIGHT) = 2.5 FT. (2'-6")

DIKE VOLUME: (48.5 FT)(20.5 FT)(2.5 FT)(7.48 GAL./CU. FT) = 18,593 GAL. (+)
VOLUME OF LARGEST TANK WITHIN DIKED AREA: 12,000 GAL. (-)
TANK DISPLACEMENT VOLUME:
π (5.25 FT.)^2 (2.5 FT.)(7.48 GAL./CU. FT.) = 1618 GAL. X 2 TANKS = 3,236 GAL. (-)
SAFETY FACTOR: (10% OF LARGEST VOLUME TANK) = 12,000 GAL. (.10) = 1,200 GAL. (-)
TOTAL (EXCESS) = 2,157 GAL. (+)

DIKE VOLUME CALCULATION - 15,000 GAL STORAGE TANK (DIKE HT. 3'-0")

FORMULAE USED:

$(\pi r^2 H)(7.48 \text{ GAL./CU. FT.})$ = TANK DISPLACEMENT VOLUME (GAL.)
$(LWH)(7.48 \text{ GAL./CU. FT.})$ = DIKE VOLUME (GAL.)

r (TANK RADIUS) = 5.25 FT. (5'-3")
L (DIKE LENGTH) = 48.5 FT. (48'-6" I.D.)
W (DIKE WIDTH) = 20.5 FT. (20'-6" I.D.)
H (DIKE HEIGHT) = 3.0 FT. (3'-0")

DIKE VOLUME: (48.5 FT)(20.5 FT.)(3.0 FT.)(7.48 GAL./CU. FT.) = 22,910 GAL. (+)
VOLUME OF LARGEST TANK WITHIN DIKED AREA: 15,000 GAL. (-)
TANK DISPLACEMENT VOLUME:
π (5.25 FT.)^2 (3.0 FT.)(7.48 GAL./CU. FT.) = 1943 GAL. X 2 TANKS = 3,886 GAL. (-)
SAFETY FACTOR: (10% OF LARGEST VOLUME TANK) = 15,000 GAL. (.10) = 1,500 GAL. (-)
TOTAL (EXCESS) = 1,924 GAL. (+)

STATE OF ILLINOIS
WILLIAM OTTO KLEIN
62-33293
ILLINOIS
REGISTERED PROFESSIONAL ENGINEER

Plate 7

safety-kleen corp.

TANK FARM PLAN

1/4" = 1'-0"
11/27/85

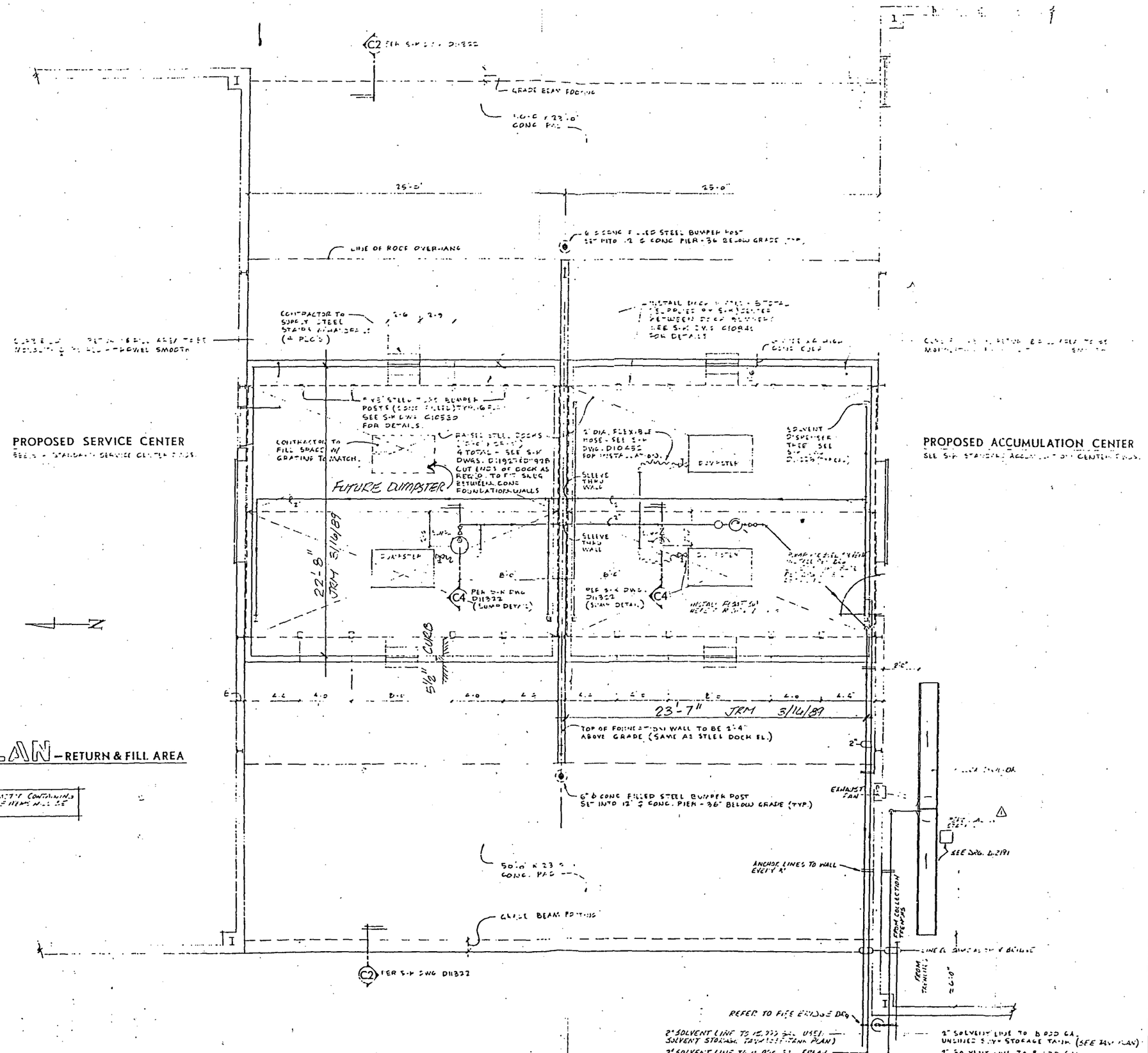
PROPOSED SERVICE CENTER
PROPOSED ACCUMULATION CENTER
DOCK PLAN – RETURN & FILL AREA
25'-0"
25'-0"
LINE OF ROOF OVERHANG
CONTRACTOR TO FILL SPACE W/ GRATING TO MATCH.
FUTURE DUMPSTER
DUMPSTER
SLEEVE THRU WALL
22'-8" JRM 5/16/89
23'-7" JRM 5/16/89
5 1/2" CURB
TOP OF FOUNDATION WALL TO BE 2'-4" ABOVE GRADE (SAME AS STEEL DOCK EL.)
6" Ø CONC FILLED STEEL BUMPER POST SET INTO 12" ø CONC. PIER - 36" BELOW GRADE (TYP.)
ANCHOR LINES TO WALL EVERY 8'
FROM COLLECTION TREATS
FROM TANKS
REFER TO FIRE EXHAUST DWG
2" SOLVENT LINE TO 12,000 GAL. USED SOLVENT STORAGE TANK (SEE PLAN)
2" SOLVENT LINE TO 8,000 GAL. UNUSED SOLVENT STORAGE TANK (SEE PLAN)
SEE DWG. D-2191
STATE OF ILLINOIS
WILLIAM OTTO HEIDT
62282293
ILLINOIS
REGISTERED PROFESSIONAL ENGINEER
Plate 8
safety-kleen corp.
DOCK PLAN - RETURN & FILL AREA

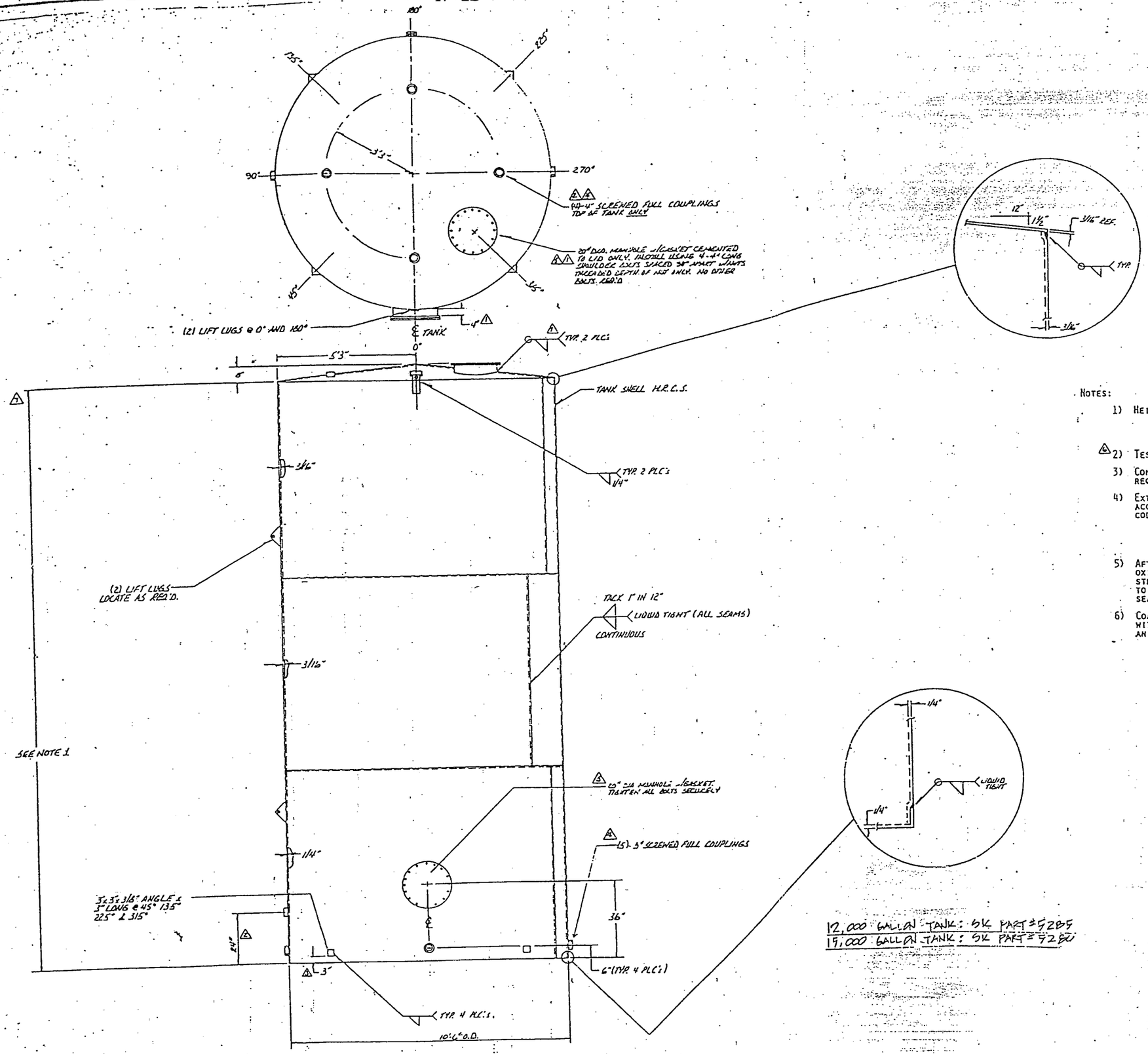

12,000 GALLON TANK: SK PART #7285
15,000 GALLON TANK: SK PART #7280

NOTES:

1) HEIGHT OF TANK WILL DEPEND ON GALLONAGE
   A) 12,000 GAL. - 18'7"
   B) 15,000 GAL. - 23'3"

2) TEST PRESSURE TO BE 2 P.S.I. AIR MIN. & 5 P.S.I. MAX.

3) CONSTRUCTION TO MEET "UNDERWRITERS LABORATORIES" REQUIREMENTS AND SO LABELED.

4) EXTERIOR OF TANK SURFACE ONLY TO BE PREPARED IN ACCORDANCE WITH "STEEL STRUCTURE PAINTING COUNCIL" CODE #SSPC-SP3-63T.
   A) REMOVE LOOSE RUST & MILL SCALE BY SANDBLASTING & POWER TOOL WIRE BRUSHING AND GRINDING.

5) AFTER SURFACE PREPARATION, APPLY (1) COAT OF WHITE OXIDE PAINT AND (2) COATS OF ALKYD BASE GLOSS WHITE STRUCTURAL ENAMEL, E.G. MOBIL 12-K-4. ALLOW PAINT TO DRY 16-24 HOURS BETWEEN COATS TO INSURE PROPER SEALING.

6) COAT BOTTOM OF TANK (EXTERIOR ONLY) ADD 4" UP SIDES WITH BUFFHIDE OR MOBIL GILSO-MASTIC #35-J-8 OR AN EQUIVALENT.

A-1

3	MOVED DIMENSION	G.S.	1-22-86
2	TANK TEST PRESSURES WERE 5 MIN. & 7 MAX.	RD	4-16-85
1	ELECTRICAL MOUNTING HOLES ADDED TOP FLANGE, ALSO NOTE RE: ELECTRICAL INSTALLATION	RD	4-16-85
	MANHOLE RE CONFIGURED AND 3" CHANGED OPENING AT BOTTOM OF TANK TO 4" INSTEAD OF 3"	RD	3-7-85
REV	DESCRIPTION	BY	DATE

safety-kleen corp.
465 BIG TIMBER ROAD • ELGIN, ILLINOIS 60120
PHONE 312/697-8460

12,000 OR 15,000 GAL ABOVEGROUND VERTICAL TANK FABRICATION DETAILS

SCALE 12" = 1'-0"		BY	DATE
DATE 4-12-82	1 ADDED ELECTRICAL & [illegible]	RD	4-16-85
DR RD	2 ADDED 7# TEST	RD	4-16-85
	3 DIM. WAS 4 1/2"	RD	3-7-85
SERVICE CENTER UPGRADE 2/10/82		D110-16	

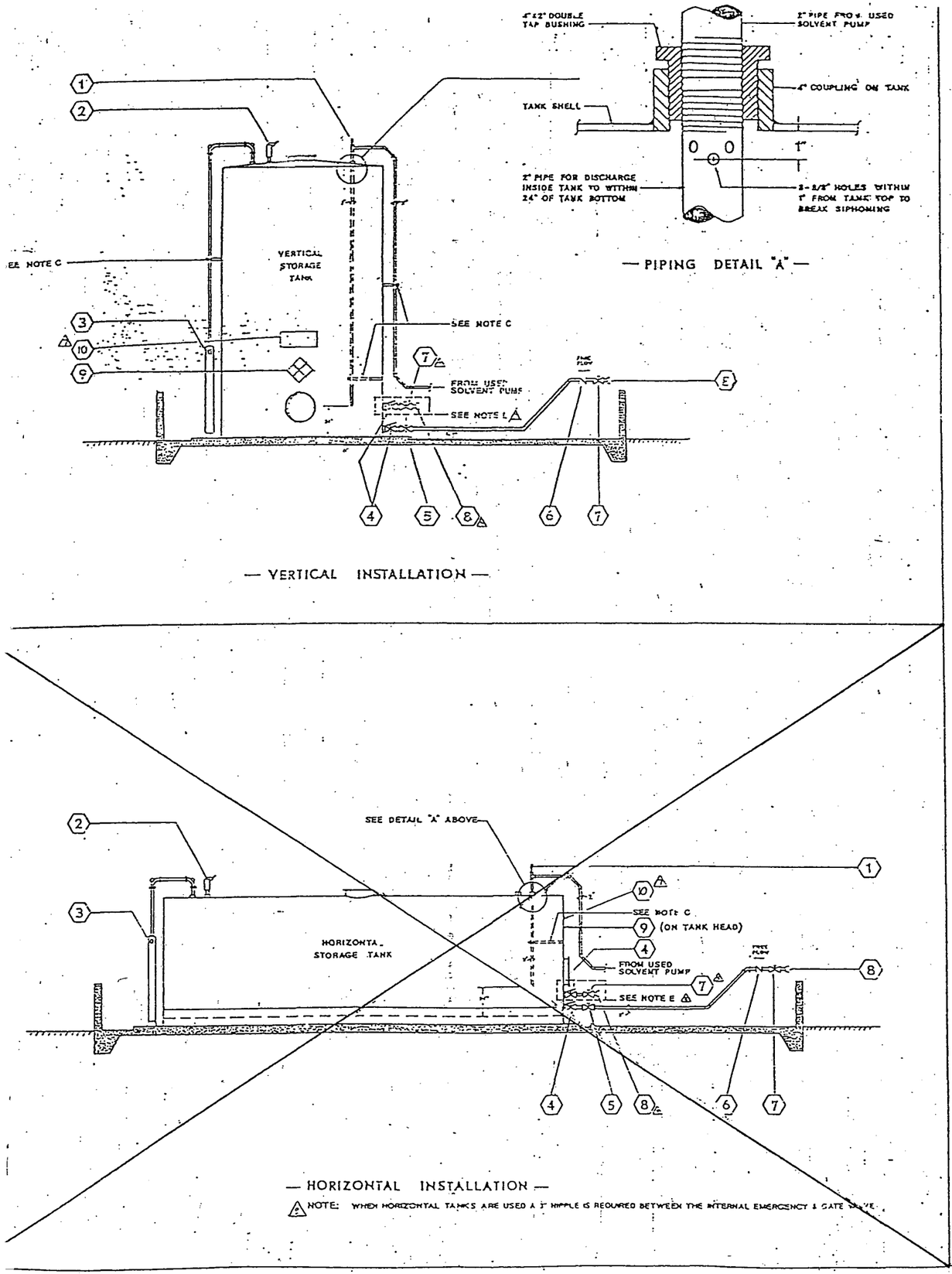

— EQUIPMENT / FIXTURE SCHEDULE —

MARK	SIZE	DESCRIPTION	SK PART NO.	REMARKS
1	3/8"	3/8" AUTOMATIC VACUUM BREAKERS MORRISON BROS. FIG. 134-A	5274	—
2	3"	3" SCREWED PRESSURE/VACUUM VENT MORRISON BROS. FIG. 548 (2 OZ. PRESSURE - 1 OZ. VACUUM)	5339	—
3		TANK GAUGE - MOORMAN BROS. MODEL NO. F-3	5277	SEE INSTALLATION DETAILS ON SAFETY-KLEEN DWG. A10243
4	3"	3" INTERNAL EMERGENCY VALVE MORRISON BROS. FIG. 272-HC W/212°F FUSIBLE LINK	5267	SEE INSTALLATION DETAILS ON SAFETY-KLEEN DWG. C11302 △2
5	3"	3" DUCTILE IRON GATE VALVE W/GROUND FLANGED ENDS - MORRISON BROS. FIG. [illegible]	5276	SEE INSTALLATION DETAILS ON SAFETY-KLEEN DWG. C11302 △4
6	3"	3" BRONZE CHECK VALVE - MORRISON [illegible]	[illegible]	—
7	3"	3" BRONZE GATE VALVE - MORRISON BROS. FIG. 235-B LOCKING TYPE	5265	—
8	3"	3" ALUMINUM CAMLOCK QUICK COUPLING - MORRISON BROS. MALE ADAPTER PART F W/DUST CAP & CHAIN	5264	COUPLING TO BE INSTALLED SIX (6) INCHES ABOVE DIKE WALL.
△1 9	—	NFPA MATERIAL IDENTIFICATION PLACARD	2452	DISPLAY IN PLAIN SIGHT ABOVE DIKE WALL
△1 10	—	'COMBUSTIBLE-KEEP FIRE AWAY' SIGN	61207	

— GENERAL NOTES —

(A) THIS DRAWING SUPERCEDES SAFETY-KLEEN CORP. DRAWINGS C10235 & C10236.

(B) SEE INDIVIDUAL SERVICE CENTER SITE PLANS FOR DIKE DIMENSIONS AND RELATED INFORMATION AND ALSO LOCATION AND ARRANGEMENT OF THESE PIPING DETAILS.

(C) ALL PIPING TO BE SCHEDULE 40 GALVANIZED AND BE SUPPORTED EVERY EIGHT (8) RUNNING FEET - CONTRACTOR TO SUPPLY ALL BRACKETS, CLAMPS, ETC. AS REQUIRED FOR SUPPORTING PIPE - ALL EXPOSED THREADS AT JOINTS TO BE PAINTED WITH A RUST RESISTANT EXTERIOR GRADE PAINT. PIPING SUPPORT HARDWARE TO BE UNISTRUT BRAND OR APPROVED EQUIVALENT.

(D) ALL DIRECTION CHANGES IN DIRTY SOLVENT LINES TO BE MADE USING A COMBINATION OF 45° ELBOWS OR LONG SWEEP 90° ELBOWS.

△2 △1 (E) THIS INSTALLATION TO BE MADE WHERE NEW TANKS ARE TO BE INSTALLED AT ANY LOCATIONS PRONE TO FREEZING. SEE INSTALLATION DETAILS ON SAFETY-KLEEN DWG. C11302

△3 (F) ALL ITEMS WITH SAFETY-KLEEN PART NO. REFERENCES WILL BE SUPPLIED TO CONTRACTOR.

A-2

NO.	REVISION DESCRIPTION	BY	DATE
△1	ADDED NOTE	CS	[illegible]
△2	CHANGED PART NO. FROM 5273 TO 5267	[illegible]	[illegible]
△3	ADDED 'COMBUSTIBLE' SIGN	[illegible]	[illegible]
△4	REV. GEN. NOTES NO. SYSTEM TO LETTERS	CS	[illegible]
△5	REMOVED 3" PLUG - ADDED VALVE/CAMLOCK	WLJ	[illegible]
△6	ADDED ITEM 9 TO SCHEDULE & DRAWING	WLJ	[illegible]
△7	ADDED NOTE F	WLJ	[illegible]
△8	REVISED DETAIL IN NOTE E E SHOWN ON DWG.	WLJ	[illegible]
△9	ADDED NOTE F TO NOTES & TO DRAWING	WLJ	[illegible]

safety-kleen corp. EXHIBIT 2-7

USED SOLVENT STORAGE TANK INSTALLATION DTL'S

NO SCALE

FOR: SERVICE CENTER BRANCH IMPROVEMENTS &/OR CONSTRUCTION

D 11124

THIS DRAWING CONTAINS INFORMATION PROPRIETARY TO SAFETY-KLEEN CORP. ANY REPRODUCTION, DISCLOSURE OR USE OF THIS DRAWING IS EXPRESSLY PROHIBITED EXCEPT BY SAFETY-KLEEN OR AS SAFETY-KLEEN MAY AGREE IN WRITING

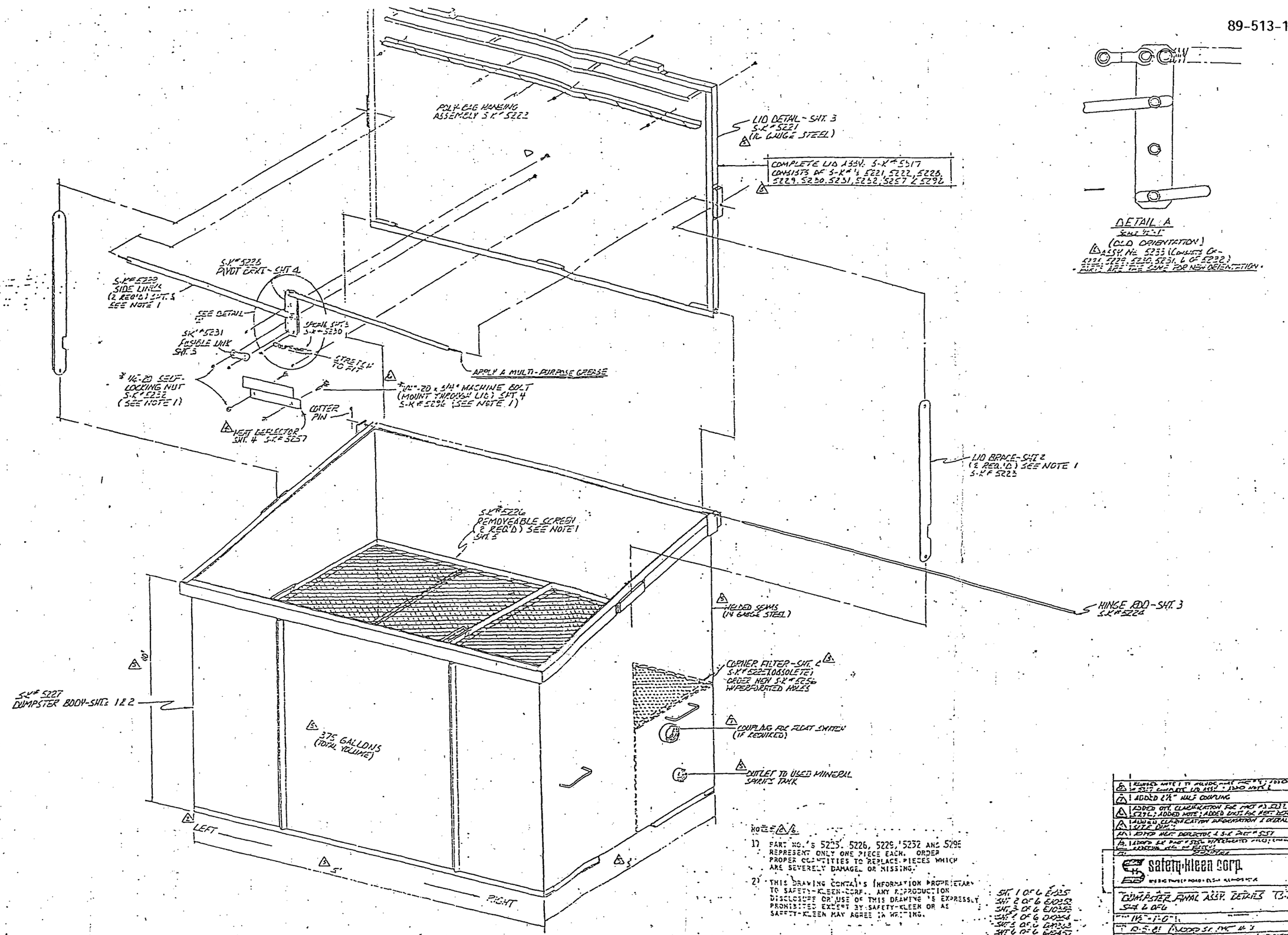

NOTES: 1) PART NO.'s 5225, 5226, 5229, 5232 AND 5296 REPRESENT ONLY ONE PIECE EACH. ORDER PROPER QUANTITIES TO REPLACE PIECES WHICH ARE SEVERELY DAMAGED OR MISSING.

2) THIS DRAWING CONTAINS INFORMATION PROPRIETARY TO SAFETY-KLEEN CORP.. ANY REPRODUCTION DISCLOSURE OR USE OF THIS DRAWING IS EXPRESSLY PROHIBITED EXCEPT BY SAFETY-KLEEN OR AS SAFETY-KLEEN MAY AGREE IN WRITING.

SHT. 1 OF 6 E1025
SHT. 2 OF 6 E1052
SHT. 3 OF 6 E1053
SHT. 4 OF 6 D1054
SHT. 5 OF 6 D1055
SHT. 6 OF 6 D1056

A-3

6	REVISED NOTE 1 TO INCLUDE [illegible] ADDED S-K # 5317 COMPLETE LID ASSY. ADDED NOTE 2	[illegible]
5	ADDED 1/2" HALF COUPLING	9-25-91
4	ADDED OTT. CLARIFICATION FOR PART #'S 5221, 5229, 5230, 5231, & 5232; ADDED NOTE 1; ADDED UNIT FOR NEXT WORK.	6-28-91
3	ADDED CLARIFICATION INFORMATION & OVERALL SIZE DWG.	3-3-91
2	ADDED NEW DEFLECTOR & S-K # 5257	[illegible]
1	ADDED S-K # 5256 W/PERFORATED HOLES; CHANGED SCREEN [illegible]	[illegible]
REV.	REVISION	DATE

safety-kleen corp.
[illegible] ROAD • ELGIN, ILLINOIS

DUMPSTER FINAL ASSY. DETAILS S-K # 5226
SHT. 1 OF 6

11-5-91		
10-5-91	ADDED SH. NO. 3	
RD	ADDED ASSY. # 5233	
	SERVICE CENTER CONSTRUCTION	D1045C

8/ac Update

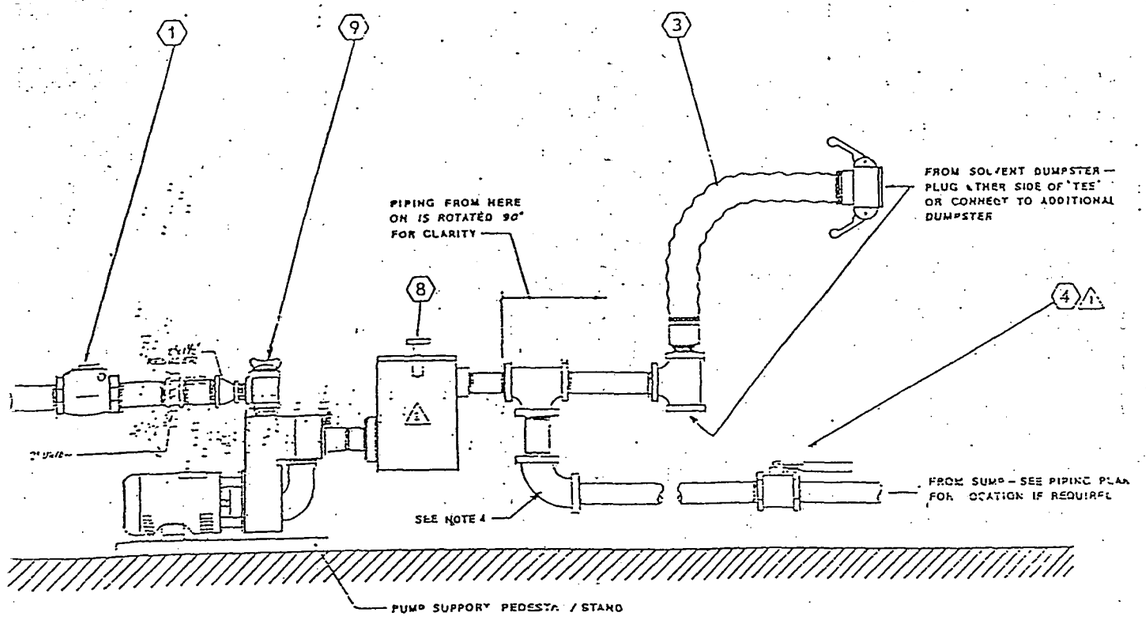

— USED SOLVENT PUMP INSTALLATION —

— EQUIPMENT / FIXTURE SCHEDULE —

MARK	SIZE	DESCRIPTION	SK PART NO.	REMARKS
1	2"	2" BRONZE CHECK VALVE - MORRISON BROS. FIG. 246-A	5280	
2	2"	2" MARLOW PUMP - 2G EVP 10A 1 HP EXPLOSION PROOF MOTOR W/JUNCTION BOX - VITON FITTED	5240	SEE SPECIFICATION DETAILS ON SAFETY-KLEEN DWG. A11118 BELOW
3	2"	2" DUMPSTER HOSE ASSEMBLY	5234	SEE SAFETY-KLEEN DWG. D10-52 FOR DETAILED INFORMATION.
4	2"	2" APOLLO BALL VALVE. BRONZE BODY W/STAINLESS STEEL BALL & TRIM. TEFLON SEALS & CONTACTS SPRING LOADED SELF CLOSING DEADMAN HANDLE	[illegible]	
5	2"	2" BACK PRESSURE VALVE VERTICAL TYPE WITH 6 PSI SPRING SETTING - MORRISON BROS. FIG. 106-B/FF (15 PSI SPRING)	[illegible]	FOR ABOVEGROUND TANK INSTALLATIONS ONLY.
6	2"	2" LINE STRAINER W/TOP CLEAN-OUT W/#20 MESH MORRISON BROS. FIG. 221	[illegible]	
7	2"	2" BRONZE GATE VALVE MORRISON BROS. FIG. 221	[illegible]	
8	2"	2" MARLOW SUCTION STRAINER ASSEMBLY MODEL 2S10A W/STAINLESS STEEL BASKET W/#20 PERFORATIONS	5513	FLANGED DISCHARGE PORT OF STRAINER SERVES AS UNION ON SUCTION SIDE OF PUMP
9	1½"	1½" MARLOW PUMP - 1½ HP49EC, SINGLE PHASE, EXPLOSION PROOF, BUNA FITTED SELF PRIMING CENTRIFUGAL	5330	SEE DETAIL BELOW LEFT

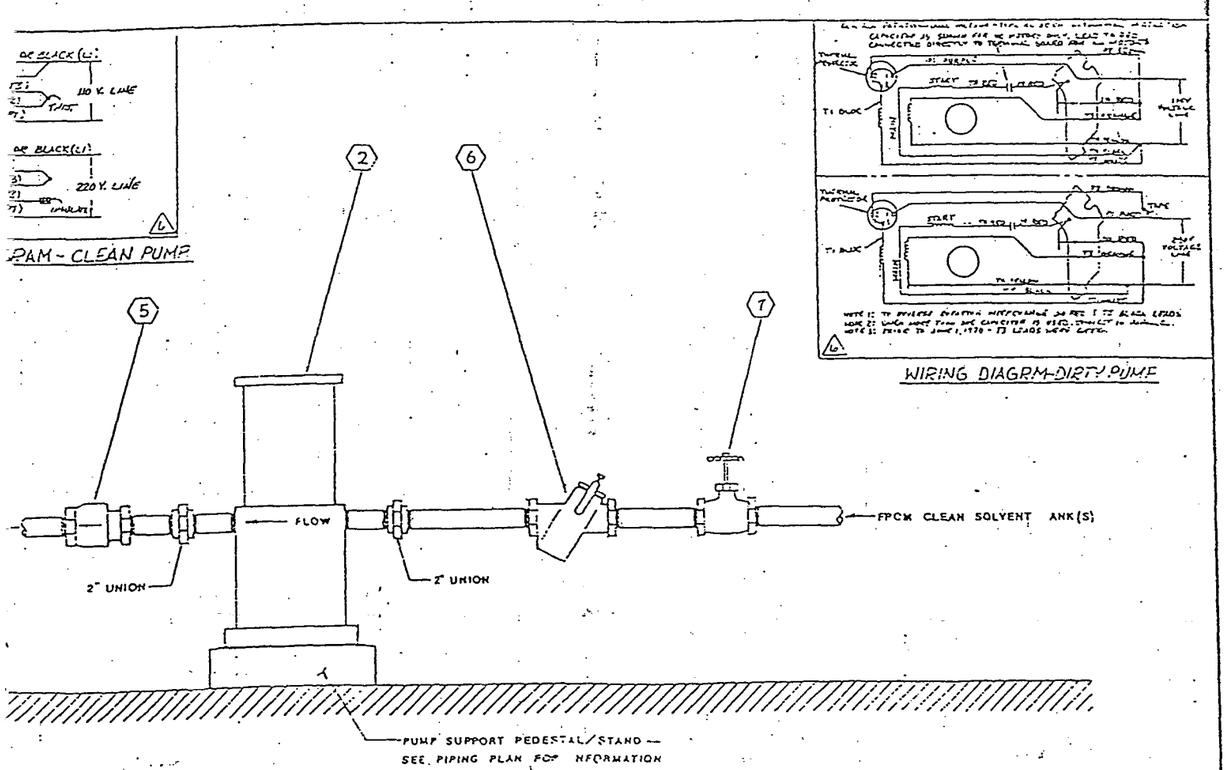

— CLEAN SOLVENT PUMP INSTALLATION —

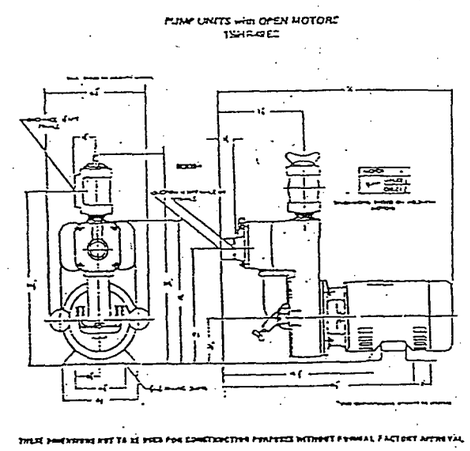

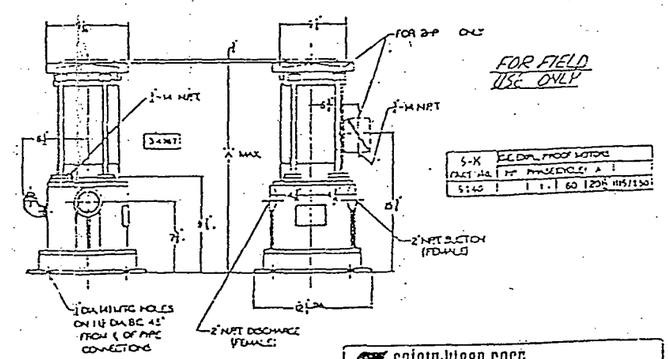

GENERAL NOTES

1. PUMPS TO BE USED BY SAFETY-KLEEN CORP - MODEL 2G EVP-10A, 1 H.P. - 2" WITH EXPLOSION PROOF MOTOR W/ JUNCTION BOX & VITON FITTED, SINGLE PHASE 60 CYCLE 115/230 V
2. SEE INDIVIDUAL SERVICE CENTER SITE PLANS FOR LOCATION OF THE INSTALLATION.

safety-kleen corp.

7" MARLOW PUMP SPECIFICATION (TO BE USED FOR CLEAN SYSTEMS ONLY)

NONE
8-30-83

FOR: SERVICE CENTER IMPROVEMENTS & CONSTRUCTION — A11118

A-4

— GENERAL NOTES —

1. THIS DRAWING SUPERCEDES SAFETY-KLEEN CORP. DRAWINGS C10259 & C10988.
2. SEE INDIVIDUAL SERVICE CENTER SITE & PIPING PLANS FOR LOCATIONS & ARRANGEMENT OF THESE DETAILS.
3. FOR UNDERGROUND TANK INSTALLATIONS, A 90° CHECK VALVE MORRISON BROS. FIG. 107 OR APPROVED EQUAL SHOULD BE INSTALLED AT TOP OF TANK ON CLEAN PUMP SUCTION LINE (CLEAN TANKS ONLY).
4. ALL PIPING TO BE 2" SHCEDULE 40 GALVANIZED UNLESS OTHERWISE SPECIFIED. ALL CHANGES OF DIRECTION IN DIRTY SOLVENT PIPING TO BE ACCOMPLISHED USING EITHER (2)-45° ELBOWS OR (1)-LONG RADIUS 90° ELBOW.
5. THIS DRAWING CONTAINS INFORMATION PROPRIETARY TO SAFETY-KLEEN CORP. ANY REPRODUCTION, DISCLOSURE OF USE OF THIS DRAWING IS EXPRESSLY PROHIBITED EXCEPT BY SAFETY-KLEEN OR AS SAFETY-KLEEN MAY AGREE IN WRITING.
6. ALL ITEMS WITH SAFETY-KLEEN PART NO. REFERENCES WILL BE SUPPLIED TO CONTRACTOR.

REV	DESCRIPTION	BY
6	ADDED NOTE 6	WLJ
5	ADDED PUMP SPECS — DWG A11118	WLJ
4	ADDED ITEM (8) & ADDED TO NOTE (4)	WLJ
3	CHANGED ITEM (4) TO NEW TYPE VALVE	WLJ

safety-kleen corp.

SOLVENT PUMP PIPING INSTALLATION DETAILS

FOR: SERVICE CENTER BRANCH IMPROVEMENTS & CONSTRUCTION

NO SCALE

D1115

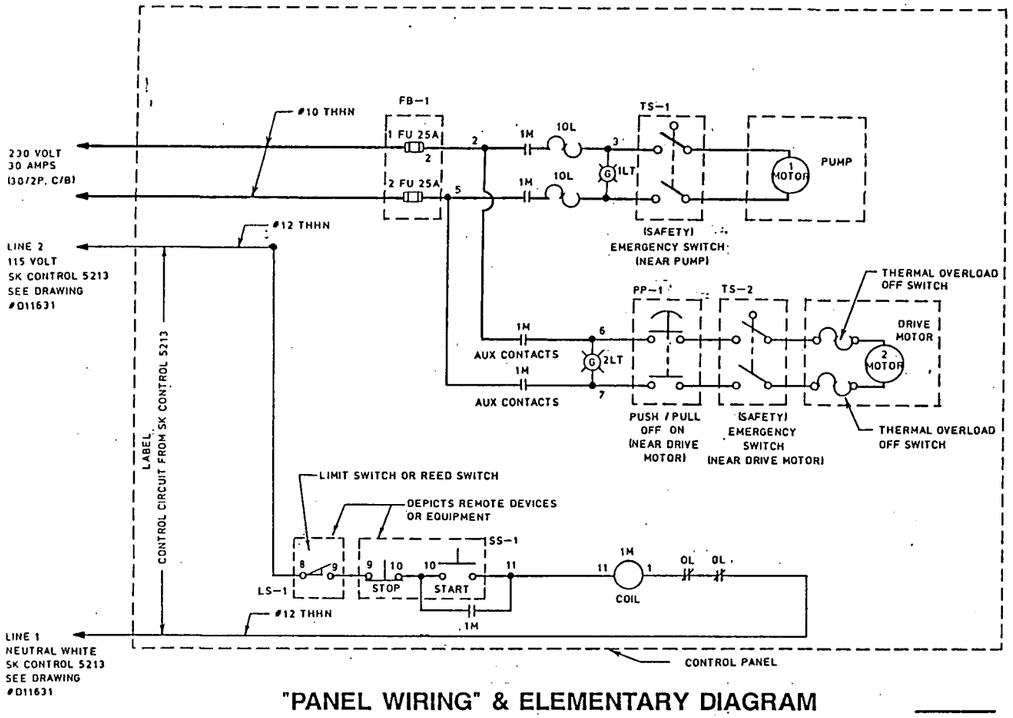

"PANEL WIRING" & ELEMENTARY DIAGRAM

N.T.S. (ONE BARREL WASHER)

POWER WIRING

CONTROL WIRING

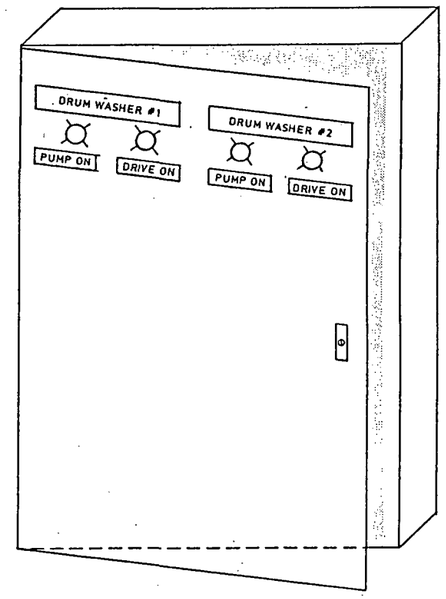

PANEL FRONT

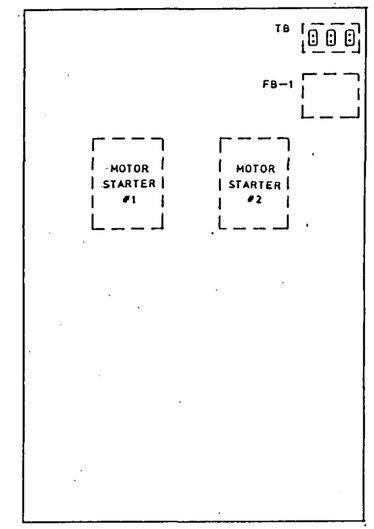

PANEL INTERIOR

CONTROL PANEL MAKE-UP

N.T.S.

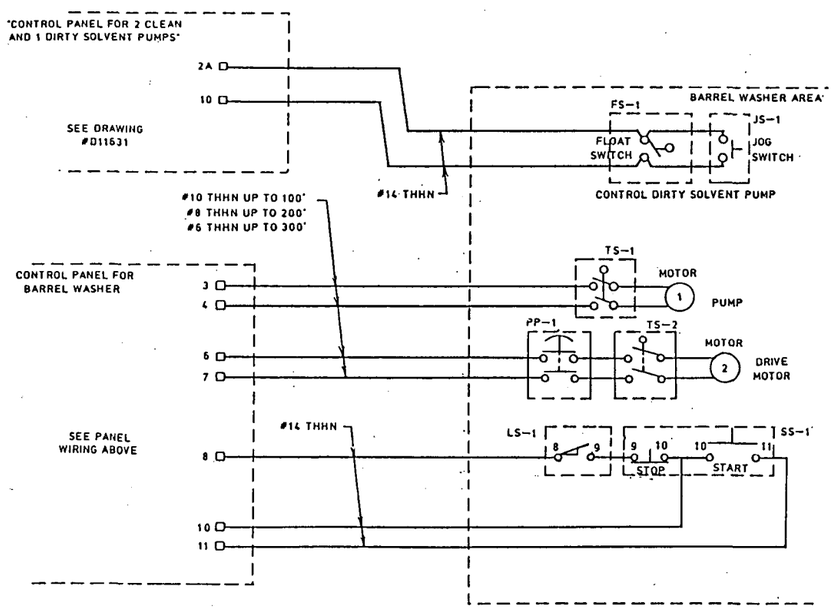

WIRING DIAGRAM

N.T.S.

BILL OF MATERIAL

TAG	QUANTITY	DESCRIPTION
FB-1	1	FUSE BLOCK WITH FRN FUSES LITTLE FUSE LH 250 30 2P EUSES FLNR.25
STARTER	2	NEMA SIZE #1 MAGNETIC STARTER SQ D 8536-SBO 1S
1LT	2	PUMP PILOT LIGHT - GREEN - 240 VOLT SQ D 9001 KP7R9 W/TRANSFORMER
2LT	2	DRIVE MOTOR PILOT LIGHT-GREEN - 240 VOLT SQ D 9001 KP7R9 WITH TRANSFORMER
PANEL	1	UNIVERSAL BOX WITH PIANO HINGE, SINGLE POINT L HANDLE LOCK, 8" DEEP, 36" HIGH, 24" WIDE

REMOTE ITEMS

SS-1	1	START-STOP STATION 9001 BR205
TS-1,2	2	2-POLE TOGGLE SWITCH, 20A RATED SQ D 2510 KR4
JS-1	1	JOG SWITCH, 1-POLE, 20A RATED
FS-1	1	FLOAT SWITCH, 1-POLE, 10A RATED
LS-1	1	LIMIT SWITCH OR REED SWITCH MAKES WHEN BARREL IS IN PLACE 9007 CL61J
PP-1	1	2 POLE TOGGLE SWITCH, START STOP STATION 2HP CONTACT RATING

Figure II.C.2-2(a)

NO.	DESCRIPTION	BY	CHKD	APPR	DATE

REVISIONS

TITLE

ELECTRICAL CONTROL PANEL
FOR DRUM WASHER "90"

SAFETY-KLEEN CORP.
777 BIG TIMBER ROAD, ELGIN, ILLINOIS 60120 PHONE 312/697-8460

PROJ. ENG. APPR.	OPERATIONS APPR.	SCALE	DRAWN	DATE
		NONE	DK	

BRANCH | DRAWING NO. D-14289 | REV.

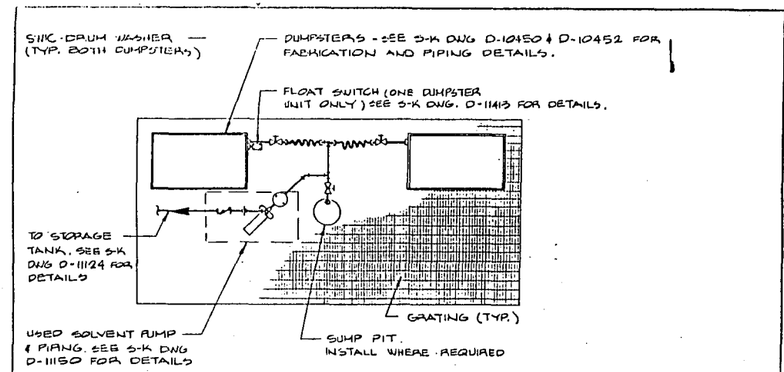

DOUBLE SWIC INSTALLATION
W/ ABOVE GROUND STORAGE

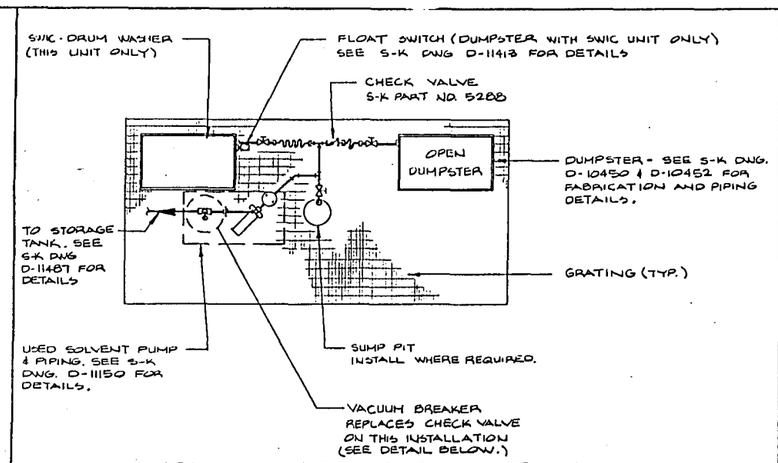

SINGLE SWIC INSTALLATION
W/UNDERGROUND STORAGE

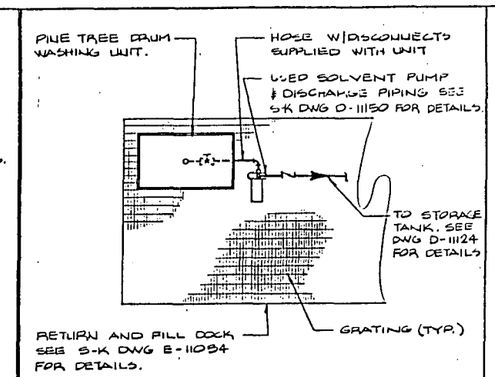

PINE TREE INSTALLATION
W/ ABOVE GROUND STORAGE

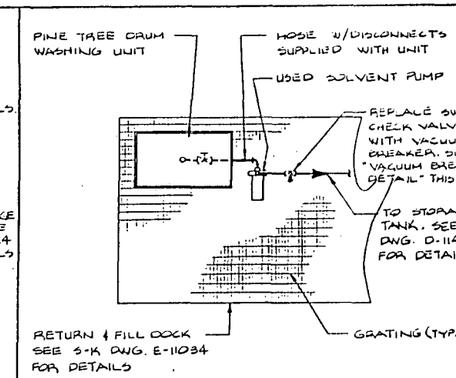

PINE TREE INSTALLATION
W/ UNDERGROUND STORAGE

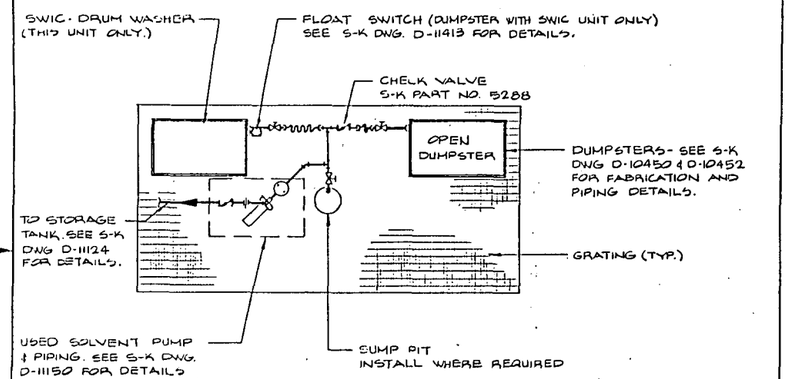

SINGLE SWIC INSTALLATION
W/ ABOVE GROUND STORAGE

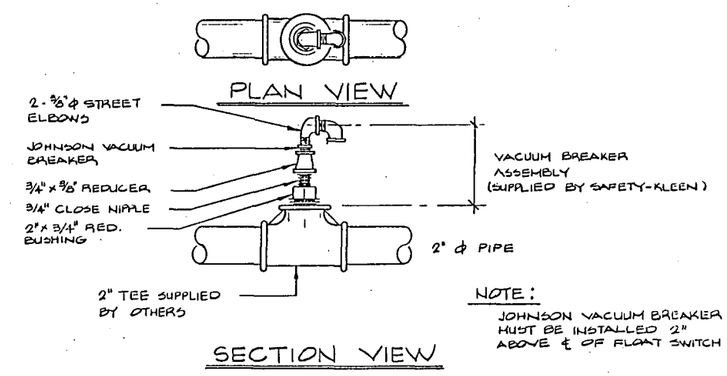

VACUUM BREAKER DETAIL

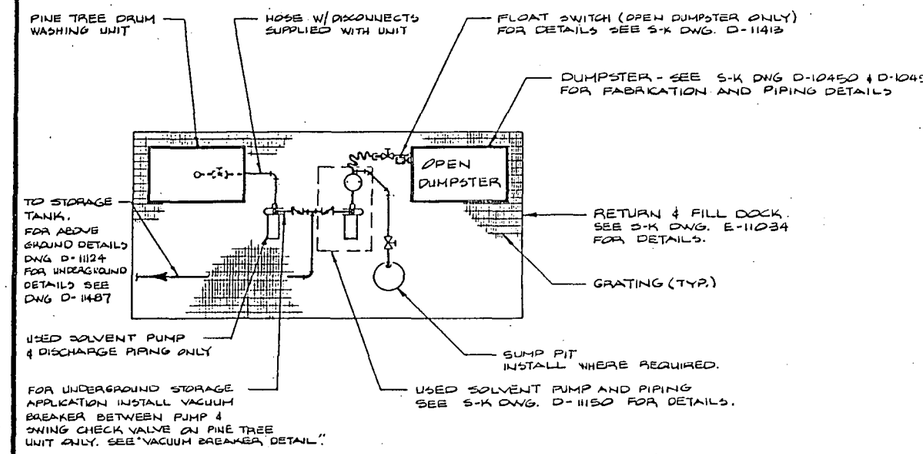

PINE TREE AND OPEN DUMPSTER INSTALLATION
FOR ABOVE GROUND & UNDERGROUND STORAGE

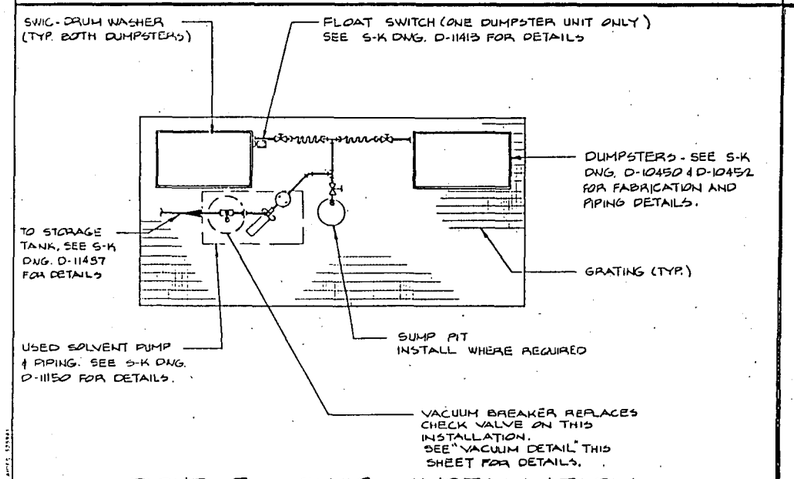

DOUBLE SWIC INSTALLATION
W/UNDERGROUND STORAGE

Figure II.C.2-2(b)

THIS DRAWING CONTAINS INFORMATION PROPRIETARY TO SAFETY-KLEEN CORP. ANY REPRODUCTION, DISCLOSURE OR USE OF THIS DRAWING IS EXPRESSLY PROHIBITED EXCEPT BY SAFETY-KLEEN OR AS SAFETY-KLEEN MAY AGREE IN WRITING.

NO	DESCRIPTION	BY	CHK	APPR	DATE
	REVISIONS				

TITLE: TYPICAL DRUM WASHER SCHEMATICS

SAFETY-KLEEN CORP.
777 BIG TIMBER ROAD • ELGIN, ILLINOIS 60123 PHONE 708/697 8460

SCALE	DRAWN	CHECKED	ENGINEERING APPR	OPERATION APPR	DATE
NONE	DLJ				12-20-

FOR SERVICE CENTER BRANCH:

DRAWING NO D-14288

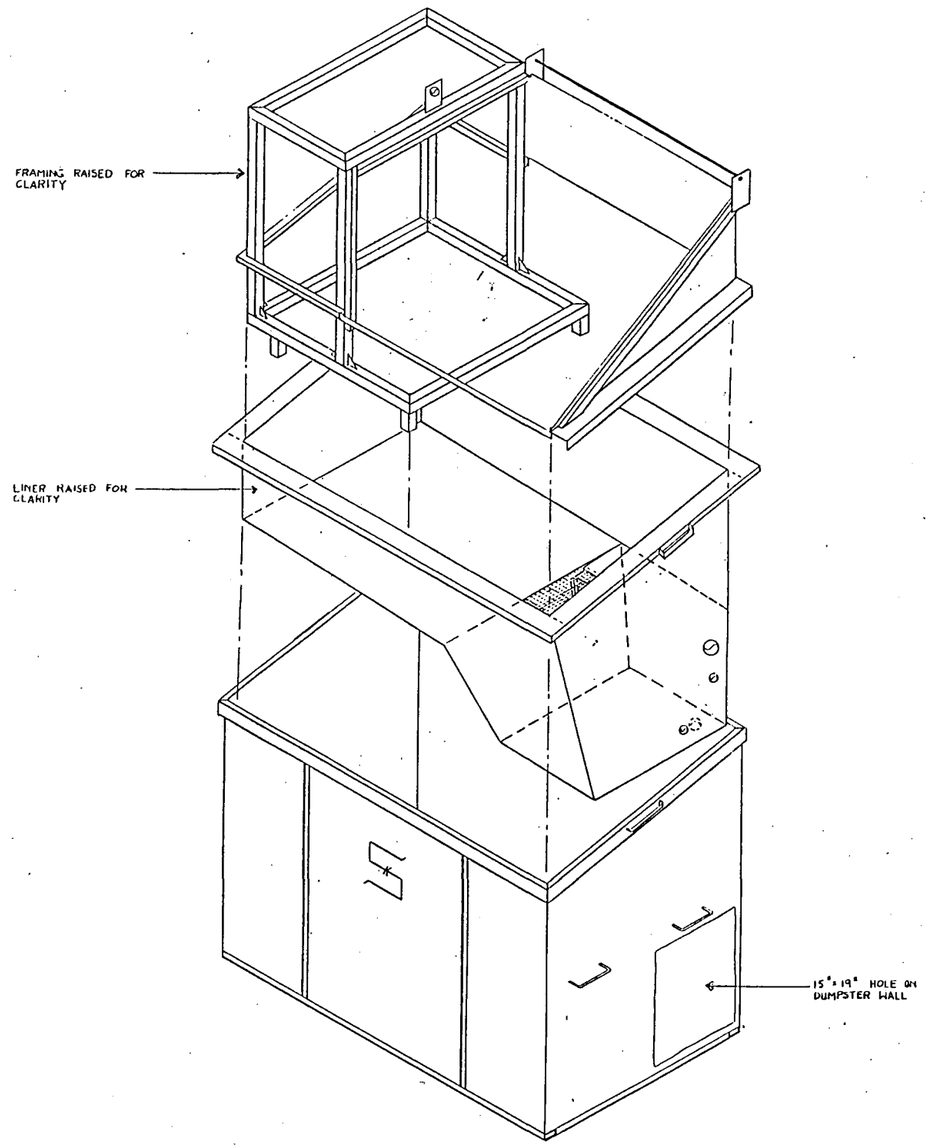

Figure II.C.2-2(c)

This drawing contains information proprietary to Southwest Industrial Constructors, Inc. Any reproduction, disclosure or use of this drawing is expressly prohibited except by Southwest Industrial Constructors or as Southwest Industrial Constructors may agree to in writing.

SOUTHWEST INDUSTRIAL CONSTRUCTORS INC

DATE: 1/19/90
JOB NO:
DWN: ALI
CHK:

SAFETY - KLEEN DRUM WASHER

SHEET NO. —

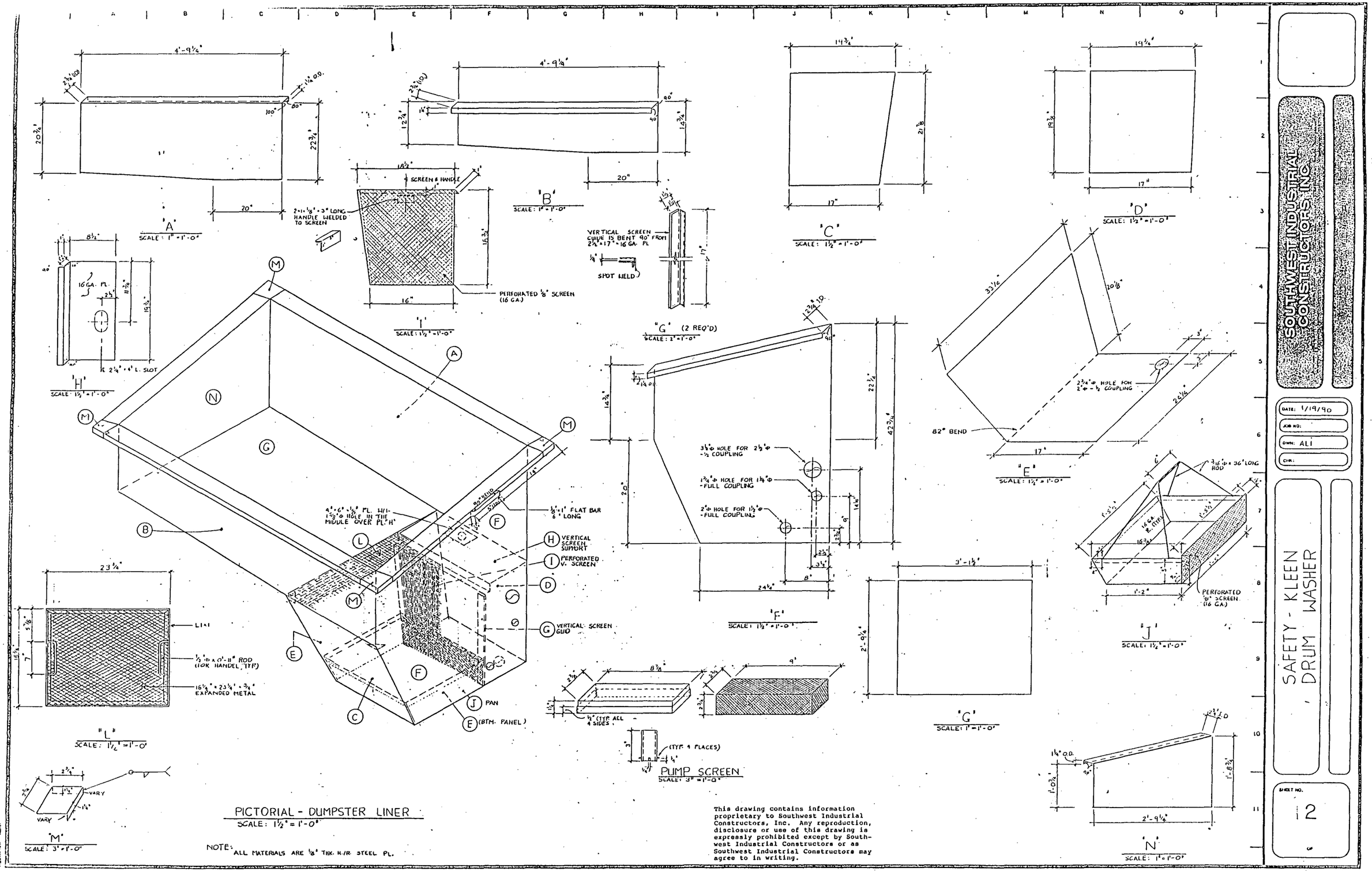

Figure II.C.2-2(d)

TT.C.2-2D

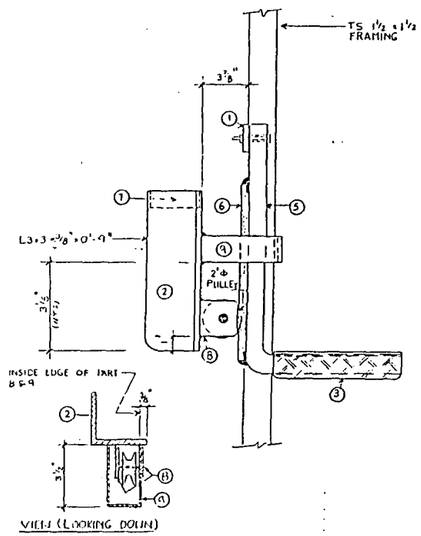

FRONT VIEW
SCALE 3" = 1'-0"

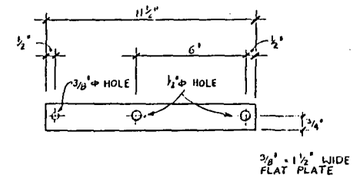

"1"
SCALE: 3" = 1'-0"

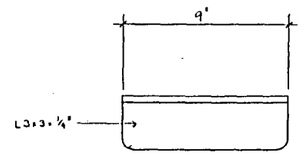

"2"
SCALE: 3" = 1'-0"

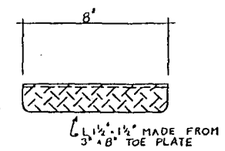

"3"
SCALE: 3" = 1'-0"

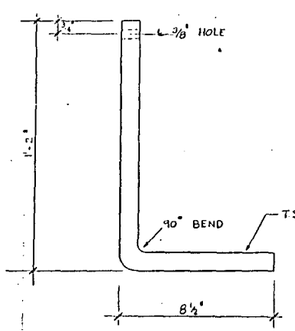

"5"
SCALE: 3" = 1'-0"

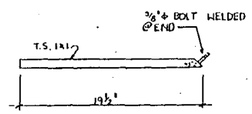

"4"
SCALE: 1½" = 1'-0"

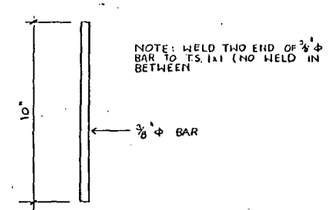

"6"
SCALE: 3" = 1'-0"

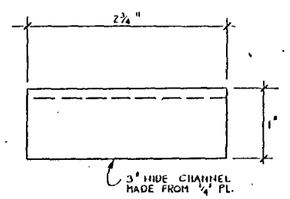

"7"
SCALE: 12" = 1'-0"

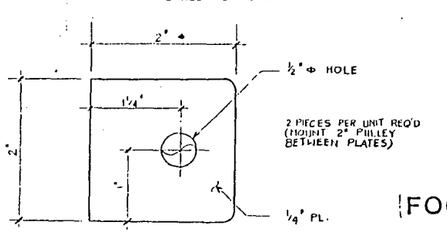

"8"
SCALE: 12" = 1'-0"

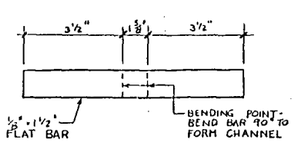

NOTE: TO FABRICATE THIS PART FIRST BEND ⅛" x 1½" x 12" LONG FLAT BAR. THEN THEN TRIM LEGS TO 3½"

"9"
SCALE: 3" = 1'-0"

FOOT PEDAL ASSEMBLY & DETAILS

MEMBER	NO. REQ'D	TYPE	LENGTH	CUT 1	CUT 2
10	2	T.S. 1½ x 1½	32⅞"	45°	45°
11	2		29⅞"	45°	45°
12	3		32½"	90°	90°
13	1		16¼"	90°	90°
14	2		33"	45°	45°
15	2		18"	45°	45°
16	1	T.S. 1x1	35⅝"	45°	45°
17	2		19"	45°	90°
18	1		26¼"	45°	90°
19	1		31¼"	45°	90°
20	4	T.S. 1½ x 1½	3"	90°	90°
21	1	L1x1	39¼"	90°	90°
22	1	T.S. 1x1	24"	90°	90°

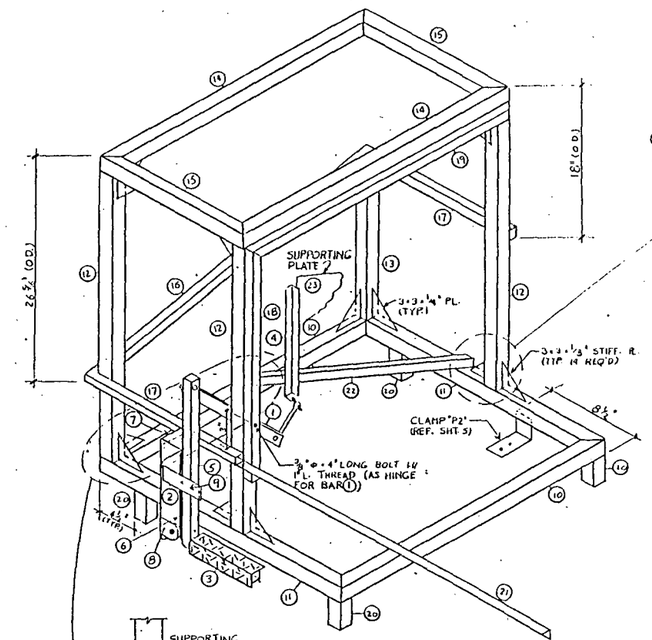

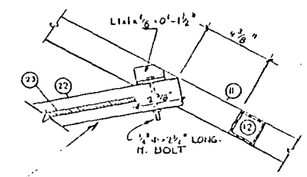

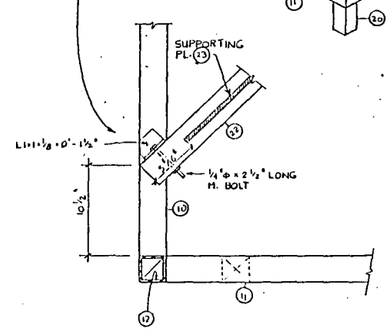

This drawing contains information proprietary to Southwest Industrial Constructors, Inc. Any reproduction, disclosure or use of this drawing is expressly prohibited except by Southwest Industrial Constructors or as Southwest Industrial Constructors may agree to in writing.

SOUTHWEST INDUSTRIAL CONSTRUCTORS INC.

DATE: 1/19/90
JOB NO:
DWN: ALI
CHK:

SAFETY - KLEEN DRUM WASHER

SHEET NO. 3 OF

Figure II.C.2-2(e)

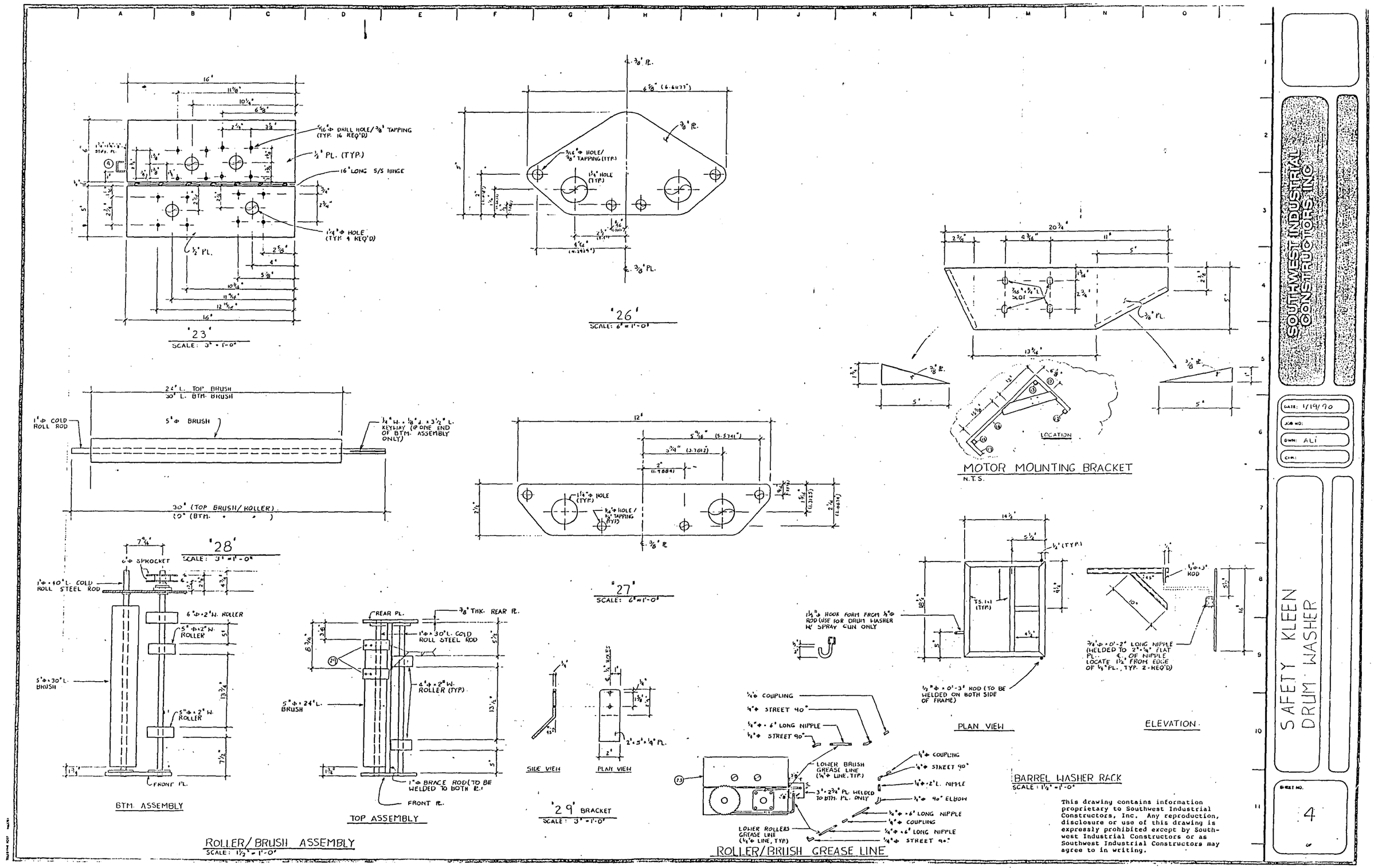

Figure II.C.2-2(f)

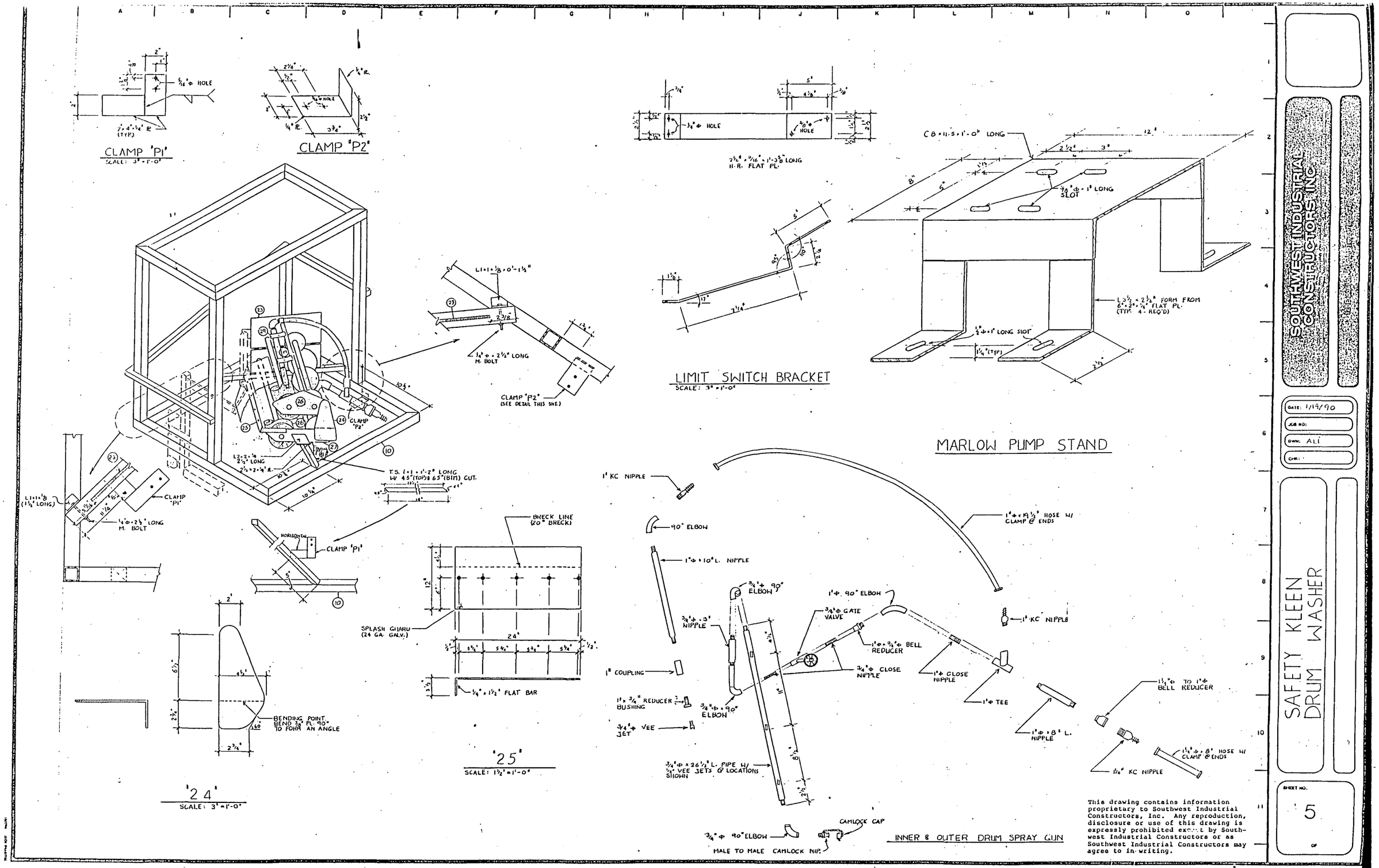

Figure II.C.2-2(g)

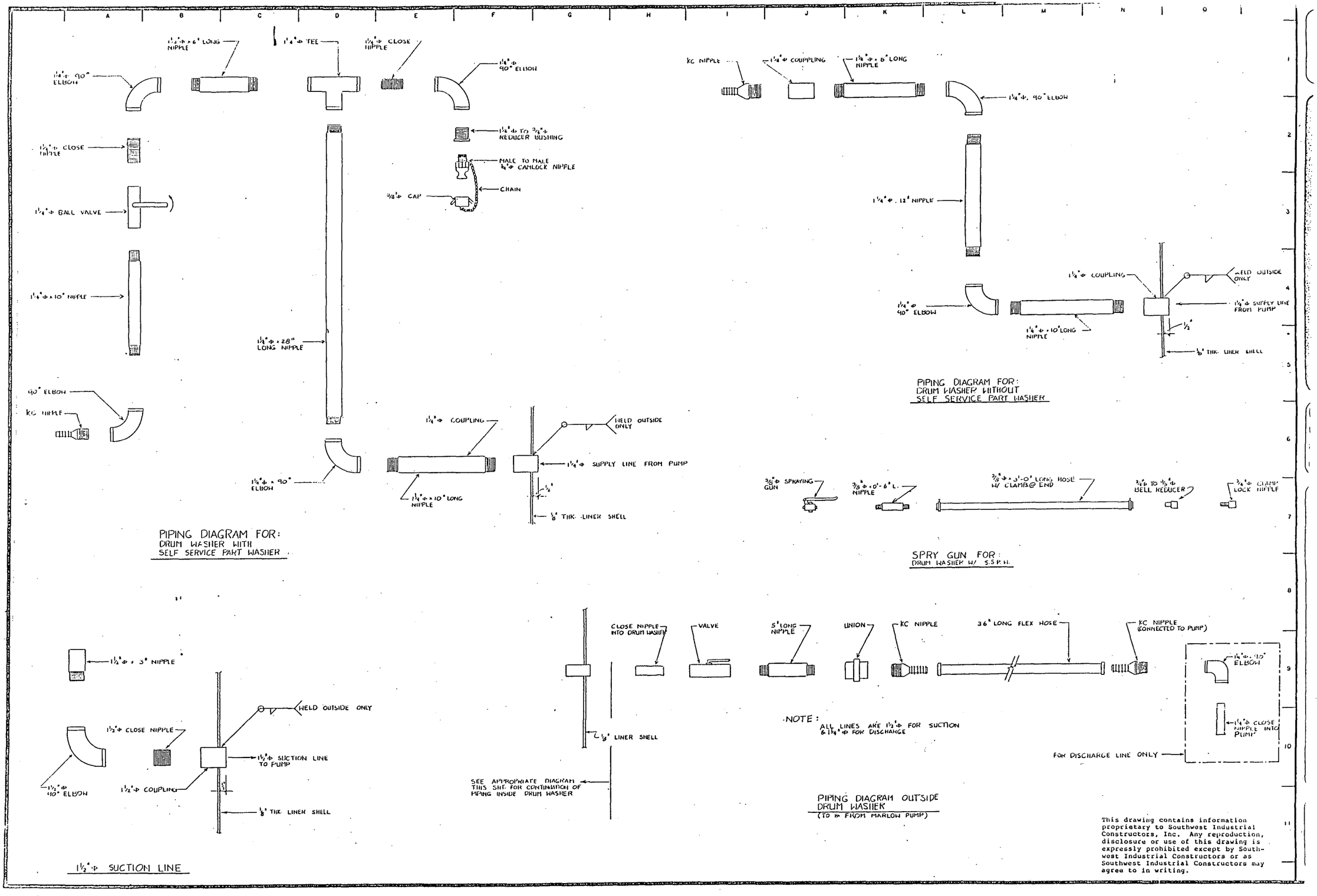

This drawing contains information proprietary to Southwest Industrial Constructors, Inc. Any reproduction, disclosure or use of this drawing is expressly prohibited except by Southwest Industrial Constructors or as Southwest Industrial Constructors may agree to in writing.

Figure II.C.2-2(h)

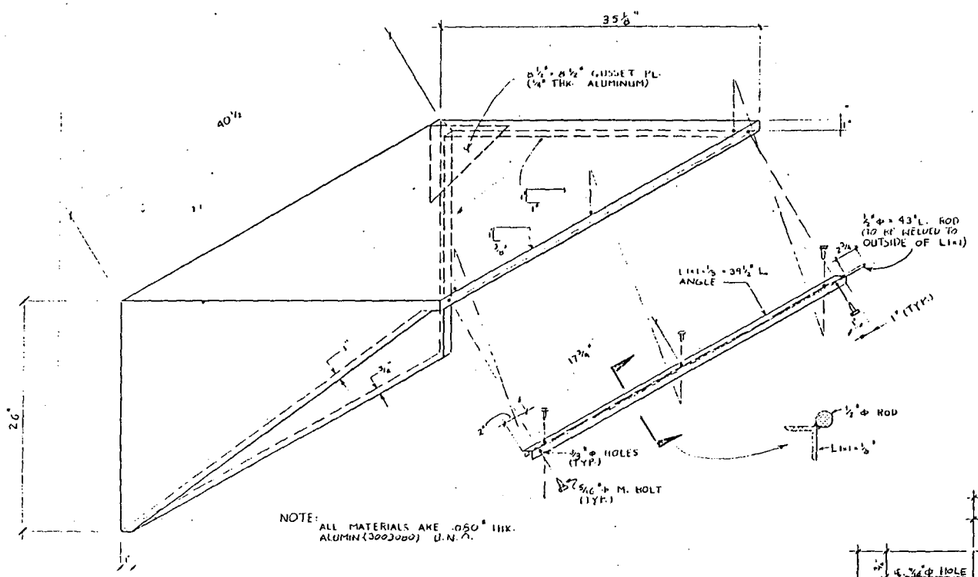

DRUM WASHER LID
SCALE: 1 1/2" = 1'-0"

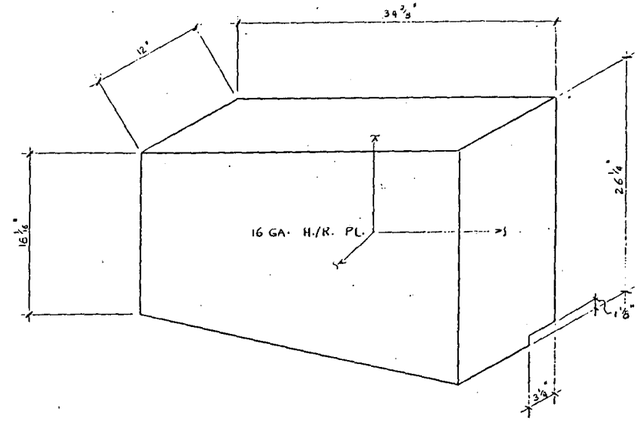

MOTOR COVER
SCALE: 1 1/2" = 1'-0"

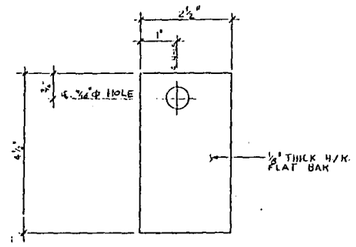

HINGE BRACKET
SCALE: 6" = 1'-0"

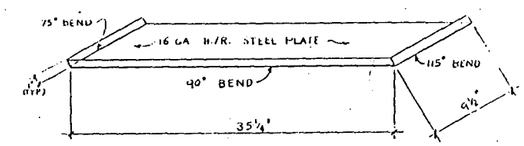

BOTTOM PAN FOR MOTOR COVER
SCALE: 1 1/2" = 1'-0"

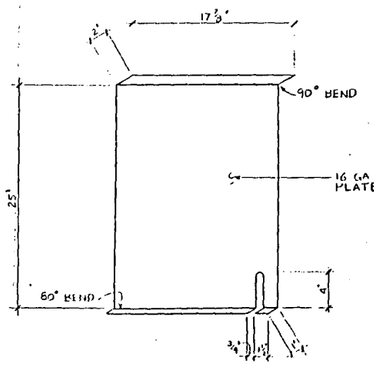

CABINET FRONT
SCALE: 1 1/2" = 1'-0"

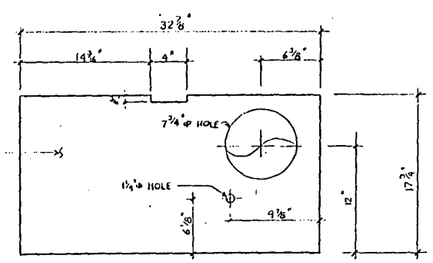

CABINET TOP
SCALE: 1 1/2" = 1'-0"

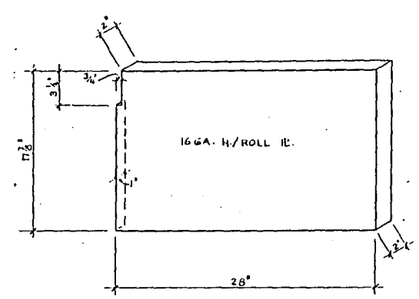

CABINET BACK
SCALE: 1 1/2" = 1'-0"

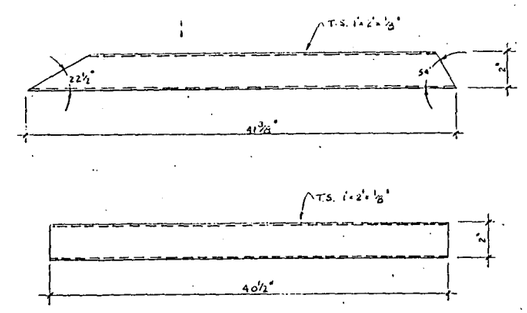

WOOD STIFFENER
N.T.S.

This drawing contains information proprietary to Southwest Industrial Constructors, Inc. Any reproduction, disclosure or use of this drawing is expressly prohibited except by Southwest Industrial Constructors or as Southwest Industrial Constructors may agree to in writing.

SOUTHWEST INDUSTRIAL CONSTRUCTORS, INC.

DATE: 1/ /90
JOB NO:
DWN: ALI
CHK:

SAFETY-KLEEN DRUM WASHER

SHEET NO. 7 OF

Figure II.C.2-2(i)

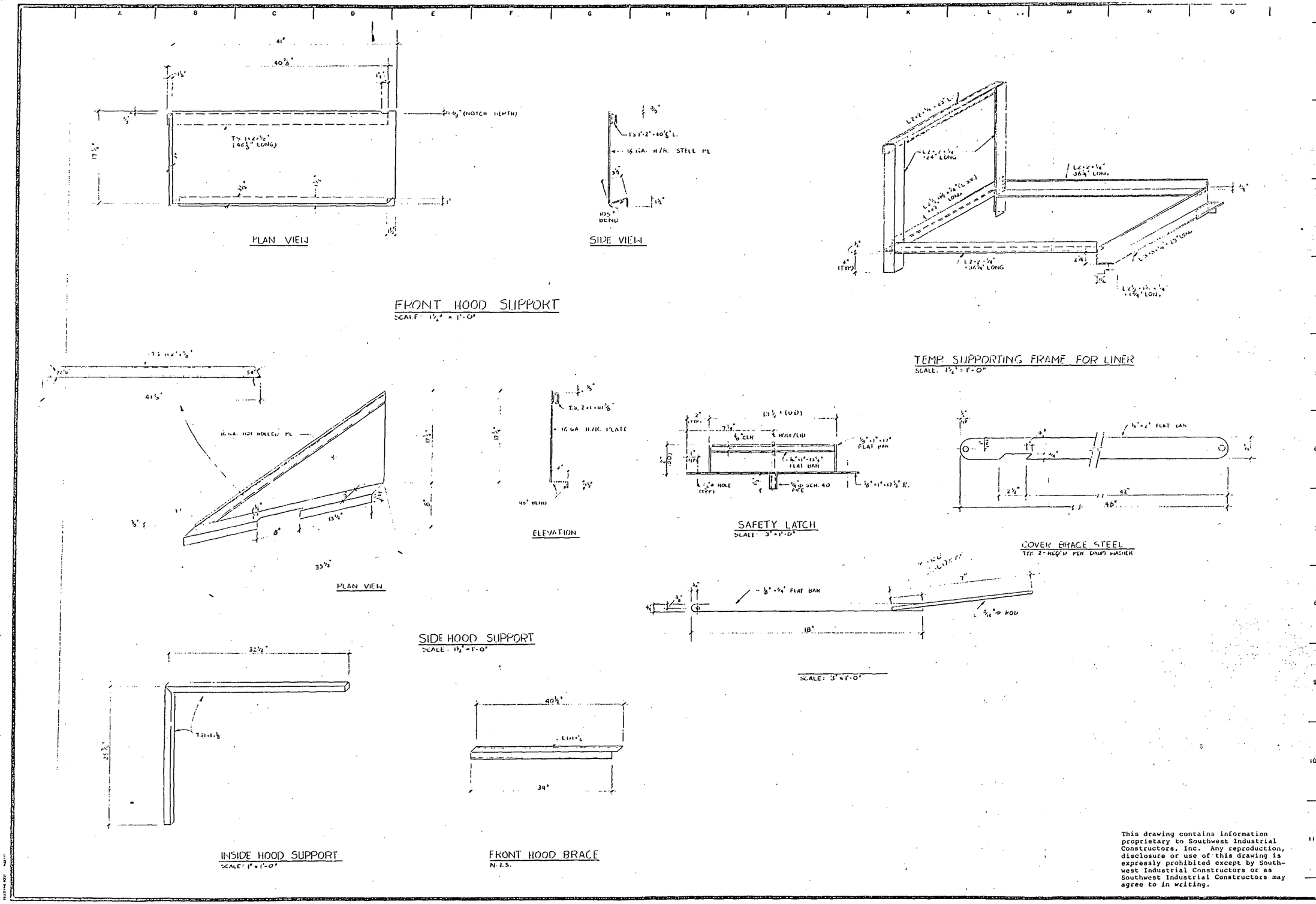

Figure II.C.2-2(j)

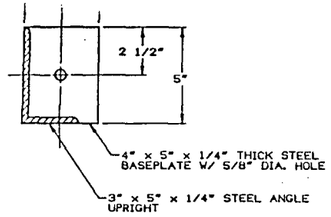

BASEPLATE DETAIL

SCALE: 3" = 1'-0"

NOTE:

SURPLUS HOSE LENGTH CAN BE COILED & STORED ON ARM PROVIDED AT SIDE OF NOZZLE STORAGE BRACKET.

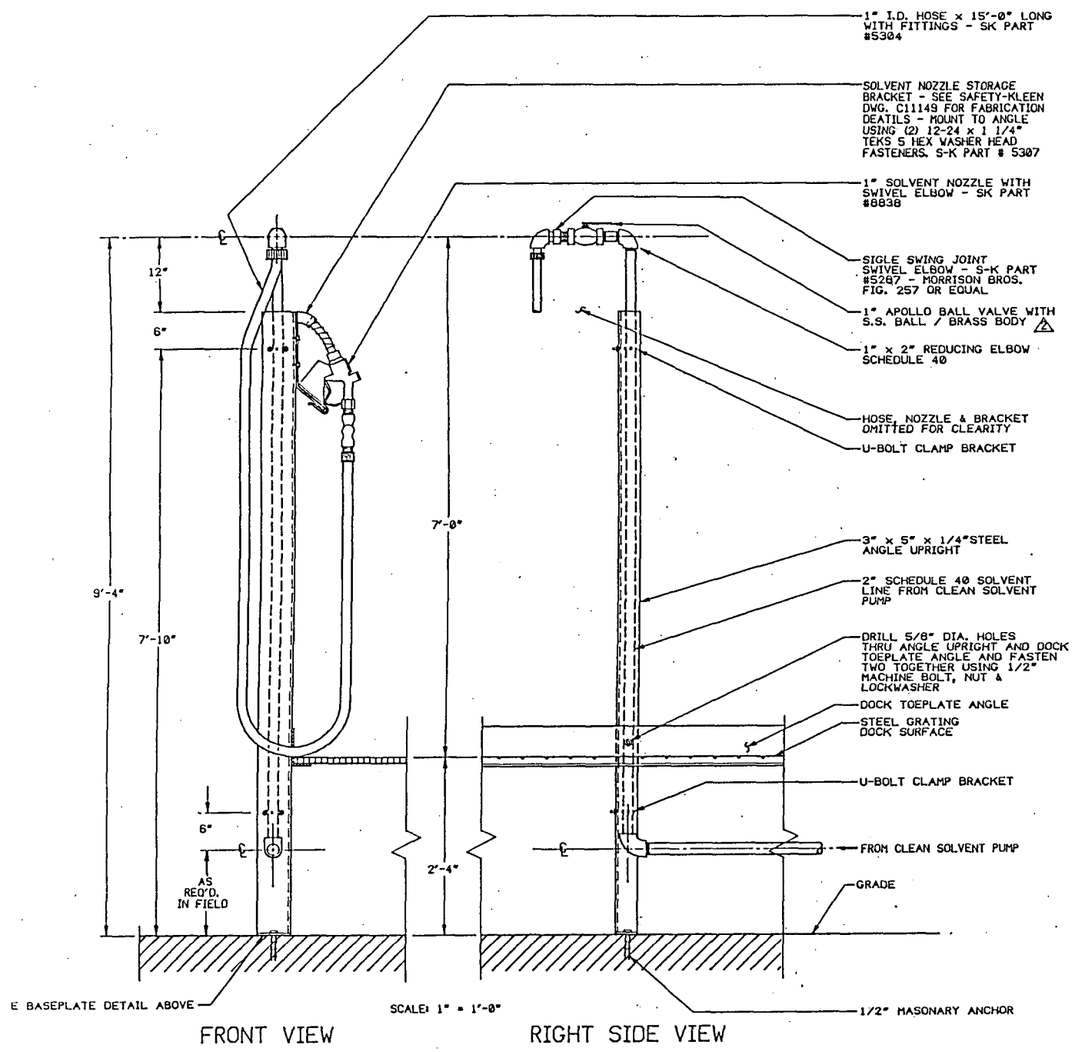

FRONT VIEW

RIGHT SIDE VIEW

INSTALLATION FOR STANDARD BUILDING PLAN

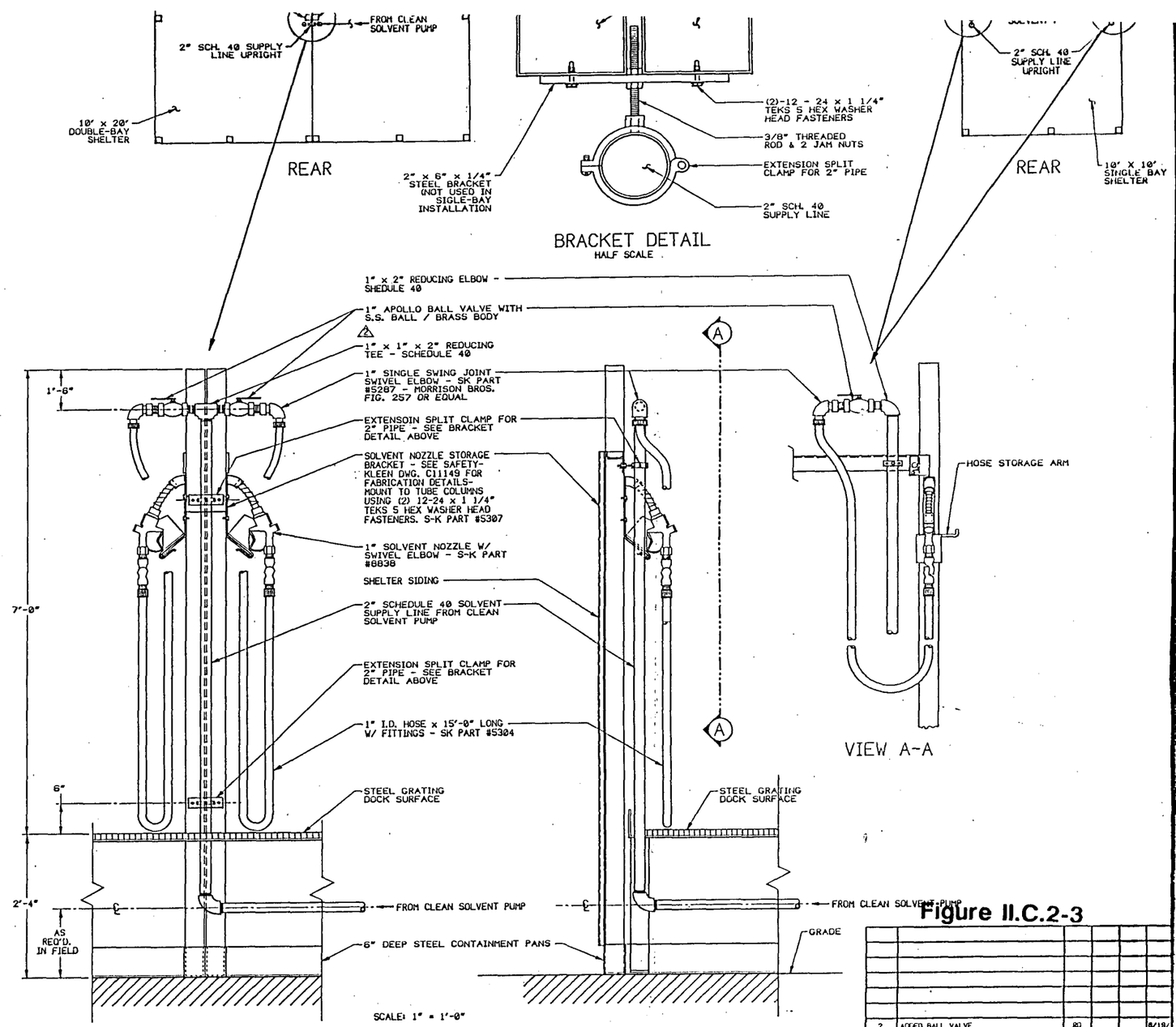

DOUBLE OR MULTIPLE BAY INSTALLATION

SINGLE BAY INSTALLATION

NOTES:

1. ALL ITEMS WITH SAFETY-KLEEN PART NO.,REFERENCES WILL BE SUPPLIED TO CONTRACTOR.
2. THIS DRAWING CONTAINS INFORMATION PROPRIETARY TO SAFETY-KLEEN CORP. ANY REPRODUCTION, DISCLOSURE OR USE OF THIS DRAWING IS EXPRESSLY PROHIBITED EXCEPT BY SAFETY-KLEEN OR AS SAFETY-KLEEN MAY AGREE IN WRITING.
3. THIS DRAWING SUPERCEDES SAFETY-KLEEN DRAWINGS C10219 & C10961.
4. SEE INDIVIDUAL SERVICE CENTER PLANS FOR LOCATION OF THESE DETAILS.

BJJ
2/20/09-GD

Figure II.C.2-3

NO.	DESCRIPTION	BY	CHKD	APPR	DATE
2	ADDED BALL VALVE	RD			8/19/
1	ADDED NOTE 1 & REFERENCED NOTES	W.J			8/23

REVISIONS

TITLE: SOLVENT DISPENSER TREE INSTALLATION DETAILS

SAFETY-KLEEN CORP.
777 BIG TIMBER ROAD, ELGIN, ILLINOIS 60123 PHONE 312/697-8460

PROJ. ENG. APPR.	OPERATIONS APPR.	SCALE	DRAWN	DATE
		AS SHOWN	NWD-GD	2/23/

BRANCH: FOR SERVICE CENTER BRANCH

DRAWING NO. D11223 REV. 2

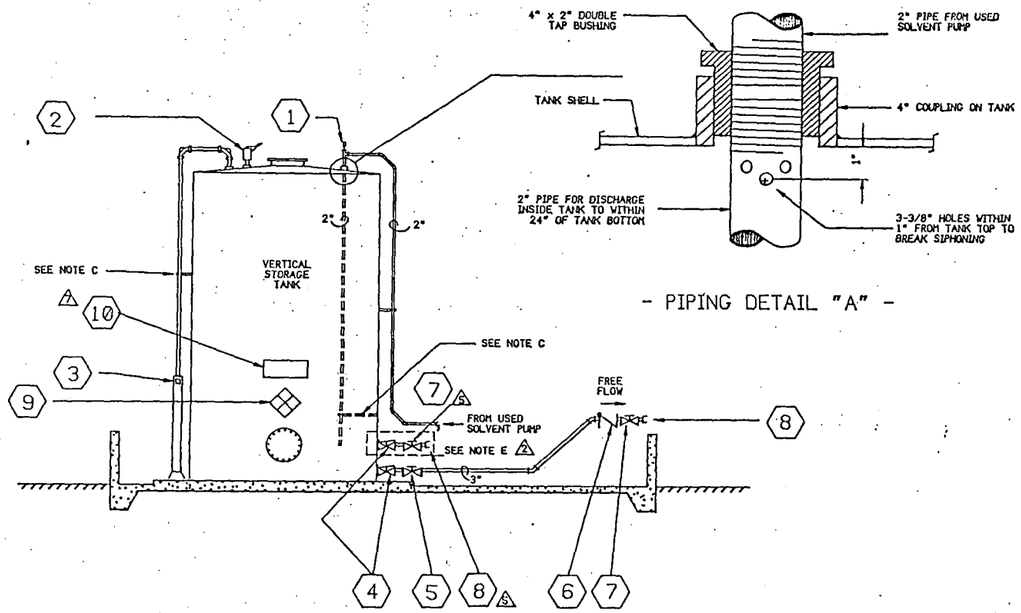

VERTICAL INSTALLATION

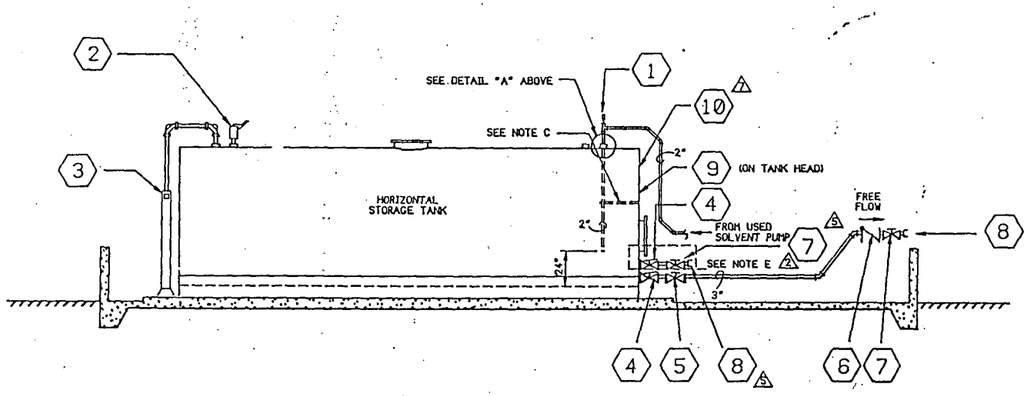

- HORIZONTAL INSTALLATION -

NOTE: WHEN HORIZONTAL TANKS ARE USED A 3" NIPPLE IS REQUIRED BETWEEN THE INTERNAL EMERGENCY & GATE VALVE

- EQUIPMENT/FIXTURE SCHEDULE -

MARK	SIZE	DESCRIPTION	SK PART NO.	REMARKS
1	3/8"	3/8" AUTOMATIC VACUUM BREAKERS MORRISON BROS. FIG. 134-A	5274	—
2	3"	3" SCREWED PRESSURE/VACUUM VENT MORRISON BROS. FIG. 548 (2 OZ. PRESSURE - 1 OZ. VACUUM)	5339	—
3		TANK GAUGE - MOORMAN BROS. MODEL NO. 7-S	5277	SEE INSTALLATION DETAILS ON SAFETY-KLEEN DWG. A10243
4	3"	3" INTERNAL EMERGENCY VALVE MORRISON BROS. FIG. 272-HO W/212°F FUSIBLE LINK	5267	SEE INSTALLATION DETAILS ON SAFETY-KLEEN DWG. C11302 5
5	3"	3" DUCTILE IRON GATE VALVE W/ROUND FLANGED ENDS - MORRISON BROS. FIG. 234-DI	5276	SEE INSTALLATION DETAILS ON SAFETY-KLEEN DWG. C11302 5
6	3"	3" BRONZE CHECK VALVE - MORRISON BROS. FIG. 246-A	5266	—
7	3"	3" BRONZE GATE VALVE - MORRISON BROS. FIG. 235-B LOCKING TYPE	5265	—
8	3"	3" ALUMINUM CAMLOCK QUICK COUPLING - MORRISON BROS. MALE ADAPTOR PART F W/DUST CAP & CHAIN	5264	COUPLING TO BE INSTALLED SIX (6) INCHES ABOVE DIKE WALL
4 9	—	NFPA MATERIAL IDENTIFICATION PLACARD	2452	DISPLAY IN PLAIN SIGHT ABOVE DIKE WALL
1 10	—	"COMBUSTIBLE-KEEP FIRE AWAY" SIGN	81207	DISPLAY IN PLAIN SIGHT ABOVE DIKE WALL

- GENERAL NOTES -

(A) THIS DRAWING SUPERCEDES SAFETY-KLEEN CORP. DRAWINGS C10235 & C10236.

(B) SEE INDIVIDUAL SERVICE CENTER SITE PLANS FOR DIKE DIMENSIONS AND RELATED INFORMATION AND ALSO LOCATION AND ARRANGEMENT OF THESE PIPING DETAILS.

(C) ALL PIPING TO BE SCHEDULE 40 GALVANIZED AND BE SUPPORTED EVERY (8) RUNNING FEET - CONTRACTOR TO SUPPLY ALL BRACKETS, CLAMPS, ETC. AS REQUIRED FOR SUPPORTING PIPE - ALL EXPOSED THREADS AT JOINTS TO BE PAINTED WITH A RUST RESISTANT EXTERIOR GRADE PAINT. PIPING SUPPORT HARDWARE TO BE UNISTRUT BRAND OR APPROVED EQUIVALENT.

(D) ALL DIRECTION CHANGES IN DIRTY SOLVENT LINES TO BE MADE USING A COMBINATION OF 45° ELBOWS OR LONG SWEEP 90° ELBOWS.

5 1 (E) THIS INSTALLATION TO BE MADE WHERE NEW TANKS ARE TO BE INSTALLED AT ANY LOCATIONS PRONE TO FREEZING. SEE INSTALLATION DETAILS ON SAFETY-KLEEN DWG. C11302.

3 (F) ALL ITEMS WITH SAFETY-KLEEN PART NO. REFERENCES WILL BE SUPPLIED TO CONTRACTOR.

Figure II.C.2-4

NO.	DESCRIPTION	BY	CHKD	APPR	DATE
9	ADDED NOTE	C.S.			6/13/00
8	CHANGED PART NO. 5273 TO 5339	J.S.H.			5/4/00
7	ADDED "COMBUSTIBLE" SIGN	R.O.			1/27/00
6	REV. GEN. NOTES NO. SYSTEM TO LETTERS	C.S.			3/30/97
5	REMOVED 3" PLUG-ADDED VALVE/CAMLOCK	V.L.J.			3/22/95
4	ADDED ITEM 8 TO SCHEDULE & DWG.	V.L.J.			11/5/84
3	ADDED NOTE F	V.L.J.			10/23/84
1	REVISED DETAIL IN NOTE E SHOWN ON DWG.	V.L.J.			12/5/83

REVISIONS

TITLE: USED SOLVENT STORAGE TANK INSTALLATION DETAILS

SAFETY-KLEEN CORP.
777 BIG TIMBER ROAD, ELGIN, ILLINOIS 60120 PHONE 312/697-6400

PROCESS APPR. | OPERATIONS APPR. | SCALE: NTS | DRAWN: R.S. | DATE: 11/22/8

FOR BRANCH SERVICE CENTER | DRAWING NO. D11124 | REV.

8D2
8-24-89 PBC

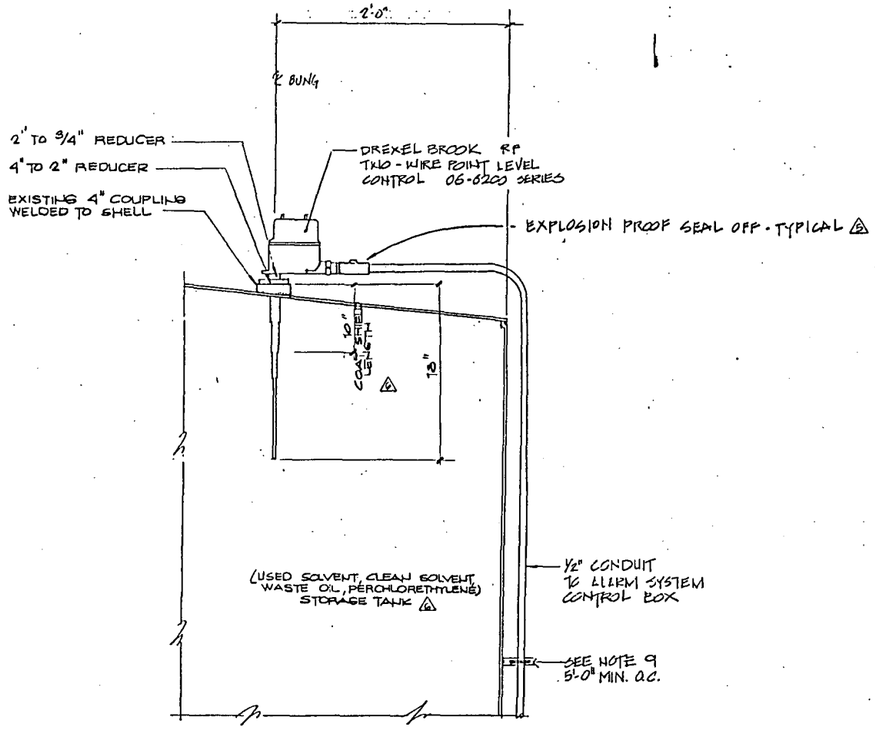

ABOVEGROUND VERTICAL TANK INSTALLATION

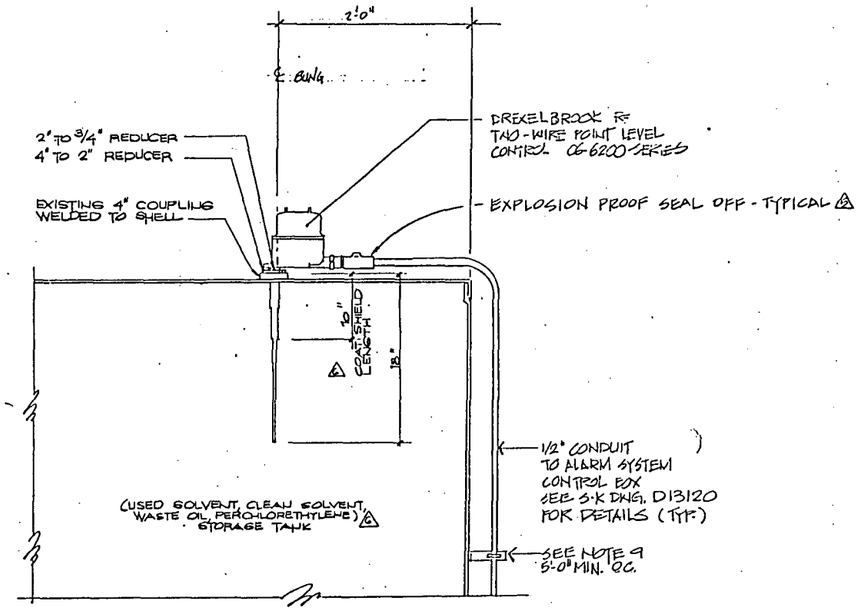

ABOVEGROUND HORIZONTAL TANK INSTALLATION

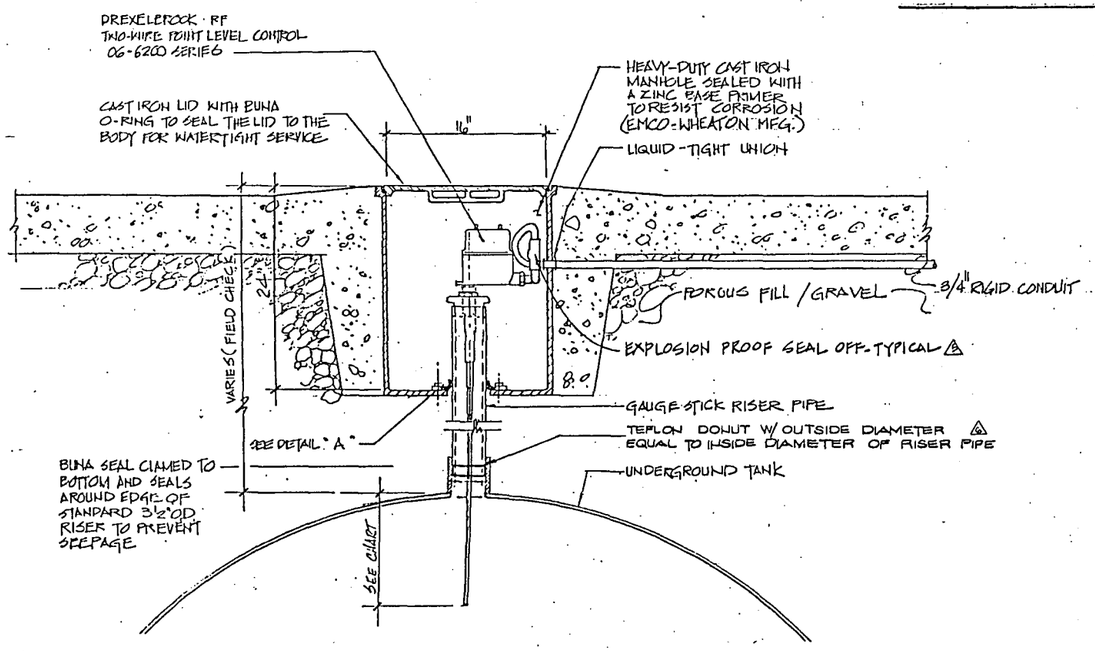

UNDERGROUND TANK RISER PIPE INSTALLATION

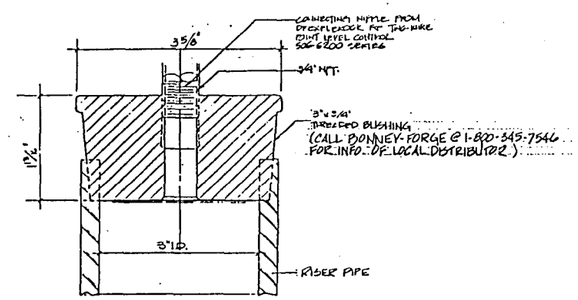

DETAIL A

GENERAL NOTES

1. POWER REQUIREMENT 13 TO 28 VDC
2. OUTPUT 4 - 10 ma (ALARM STATE)
   15 - 25 ma (NORMAL STATE)
3. OPERATING TEMP. -40°F TO +140°F
4. SHIELD-TO-GROUND LOADING: 25 ohm MIN. RESISTANCE
5. RFI EFFECT: LESS THAN 2 pF SHIFT IN OPERATING POINT FOR UNIT IN EXPLOSION-PROOF HOUSING FROM 5 W FIELD @ 27, 150, OR 450 mH, AT A DISTANCE OF 5 FT. FROM EXPOSED CABLE OR SIGNAL WIRE.
6. FAIL-SAFE: SWITCHABLE OR EITHER LOW-LEVEL FAIL-SAFE (LLFS) OR HIGH-LEVEL FAIL SAFE (HLFS).
7. HOUSING: NEMA 12-WATERPROOF EXPLOSION PROOF FOR CLASS I GROUPS A, B, C, D, AND CLASS II GROUPS E, F, G DIV. 1 OR 2.
8. SEE INDIVIDUAL SERVICE CENTER SITE PLANS FOR RELATIVE LOCATIONS OF THESE DETAILS.
9. CONTRACTOR TO SUPPLY & INSTALL CONDUIT SUPPORTS & BRACKETS AS REQUIRED.
10. THIS DRAWING CONTAINS INFORMATION PROPRIETARY TO SAFETY-KLEEN CORP. ANY REPRODUCTION, DISCLOSURE OR USE OF THIS DRAWING IS EXPRESSLY PROHIBITED BY SAFETY-KLEEN
11. ALL ITEMS SHOWN WITH A SAFETY-KLEEN PART NUMBER WILL BE SUPPLIED BY SAFETY-KLEEN CORP. (e.g. S-K - - - - -)
12. IF INDIVIDUAL SERVICE CENTER CONDITIONS ARE NOT COVERED BY DETAILS SHOWN HERE, PLEASE CONTACT TECHNICAL SERVICES AT THE CORPORATE OFFICE FOR ASSISTANCE.
13. 4 CALCULATIONS FOR LENGTH OF PROBE INSIDE OF TANK ARE SET TO ACTIVATE THE ALARM AT THE 95% VOLUME LEVEL.
14. 4 ALL CALIBRATION OF UNIT SHALL BE DONE IN ACCORDANCE WITH DREXELBROOK'S RECOMMENDATIONS. CALIBRATION SHALL BE DONE AFTER ALL COMPONENTS OF SYSTEM ARE IN PLACE.
15. ALL TANKS SHALL BE GROUNDED PRIOR TO INSTALLATION OF ALARM SYSTEM.

Figure II.C.2-5(a)

4 ADD NOTES AND MODIFY THE DWG. ON VERT. & HOR. TANK INSTALLATION.	MA	7-20-01
3 ADD "EXPLOSION PROOF SEAL OFF" NOTE	FLB	12-13-88
4 CHANGE: PROBE DEPTH, NOTE 13	FLB	11-23-88

safety-kleen corp.
777 BIG TIMBER ROAD • ELGIN, ILLINOIS 60123 PHONE 312/697-6160

HIGH LEVEL ALARM SYSTEM TRANSMITTER TO TANK INSTALLATION DETAILS

SCALE NONE	REVISIONS	BY	DATE
DATE 6-22-88	1 ADDED CHART (MISC. INFO.	RD	7/5/88
DR'N RD CHK'D	2 16"Φ WAS 18"; 24" WAS 18"	RD	9/23/88
APP'D	3 ADDED SEAL OFF	RD	11/3/88

TITLE for: SERVICE CENTER BRANCH DWG. D13102

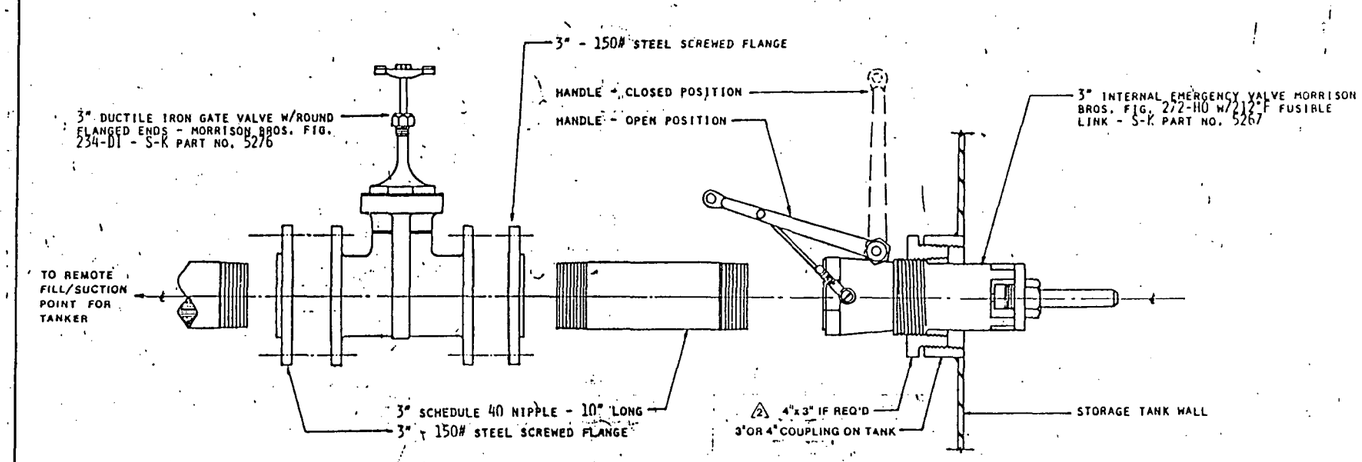

— STANDARD INSTALLATION FOR PIPING OF ALL STORAGE TANKS —

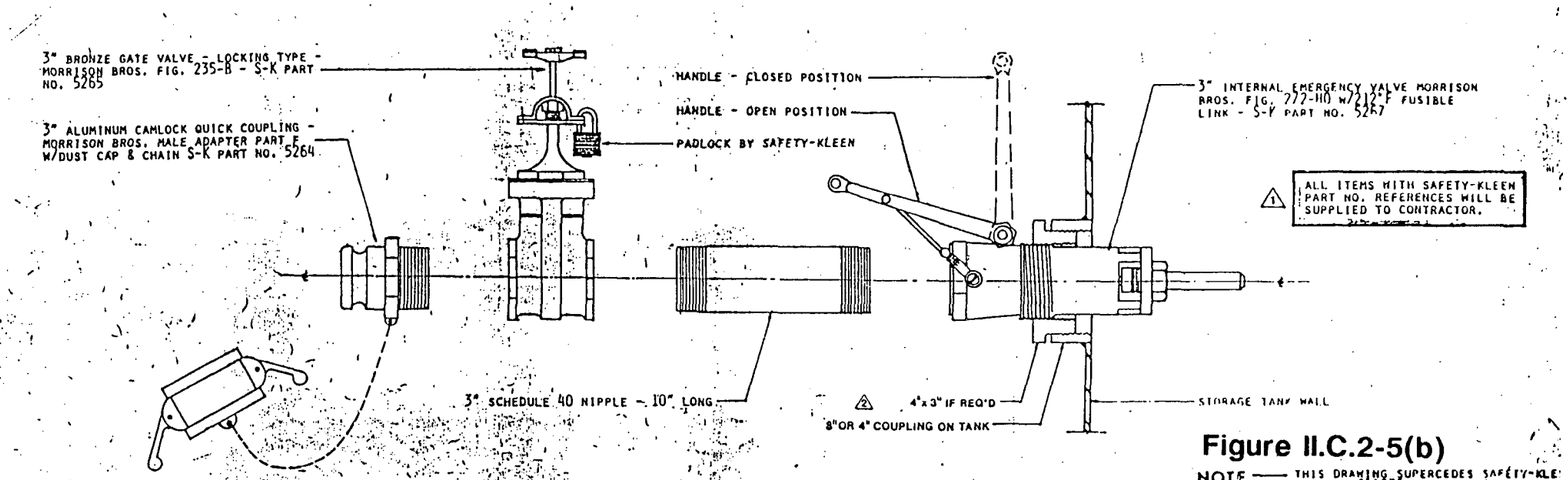

Figure II.C.2-5(b)

NOTE — THIS DRAWING SUPERCEDES SAFETY-KLEEN DRAWING C11036

— ADDITIONAL INSTALLATION FOR PIPING OF NEW TANKS FOR STORAGE OF USED SOLVENT —
(FOR LOCATIONS PRONE TO FREEZING ONLY - SEE SAFETY KLEEN DRAWING D11124 ——)

REV	DESCRIPTION	BY	
2	ADDED CLARIFICATION	RD	3/24/86
1	ADDED NOTE	WJ	10/23/84

safety-kleen corp.

EMERGENCY & GATE VALVE INSTALLATION DETAILS—
FOR: SERVICE CENTER BRANCH CONSTRUCTION & OR IMPROVEMENTS

SCALE: NO SCALE
DATE: 11-5-
DRAWN: WJ
DWG. NO.: C1130

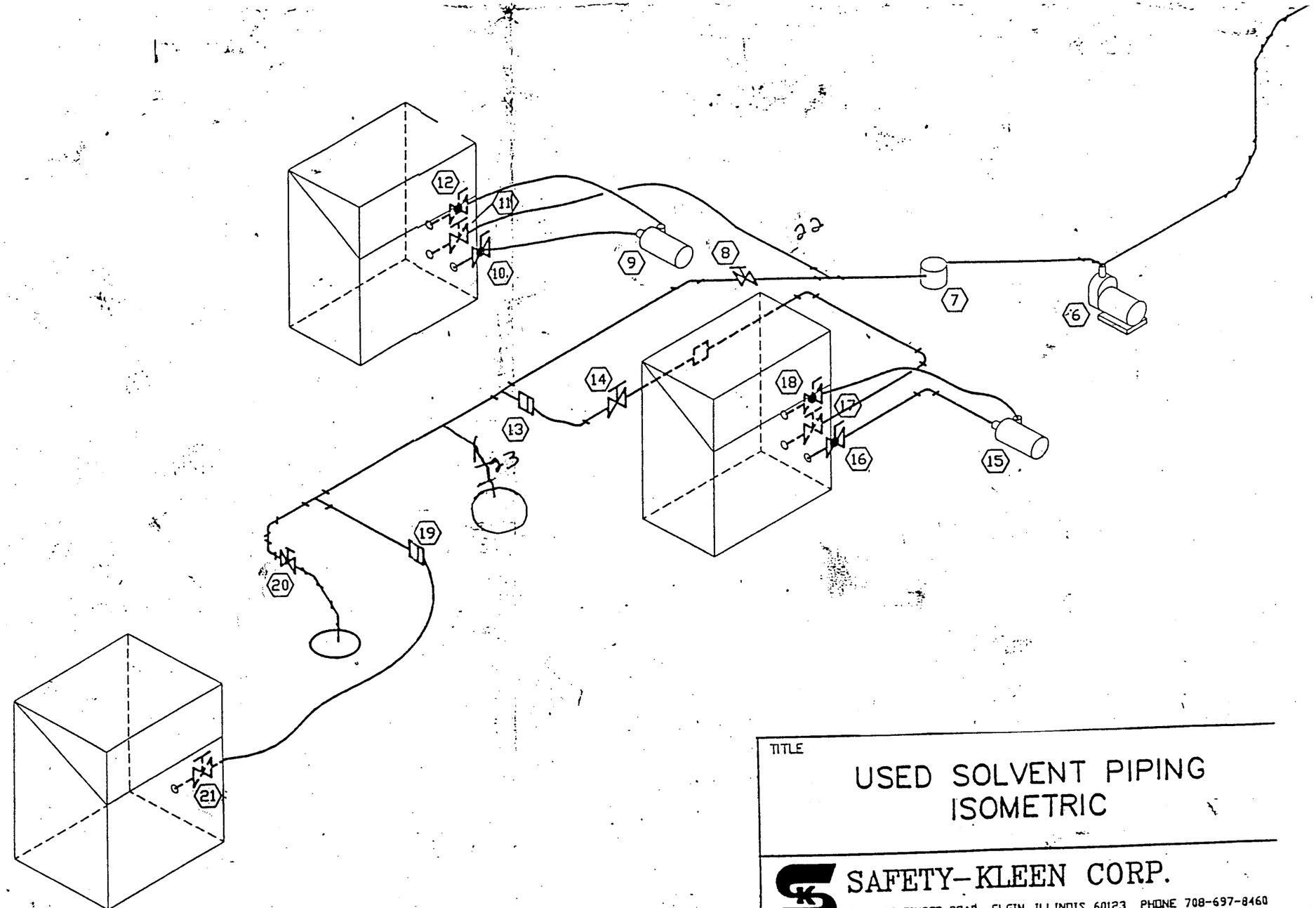

TITLE

USED SOLVENT PIPING ISOMETRIC

SAFETY-KLEEN CORP.

777 BIG TIMBER ROAD ELGIN, ILLINOIS 60123 PHONE 708-697-8460

SCALE	BY	CHKD	P.E. APPR	OP. APPR	DATE
NTS	MJP	–	–	–	12-27-

SERVICE CENTER LOCATION	SC-DWG-REV NO.
TAMPA, FL	316301-2002-(

2-27-90

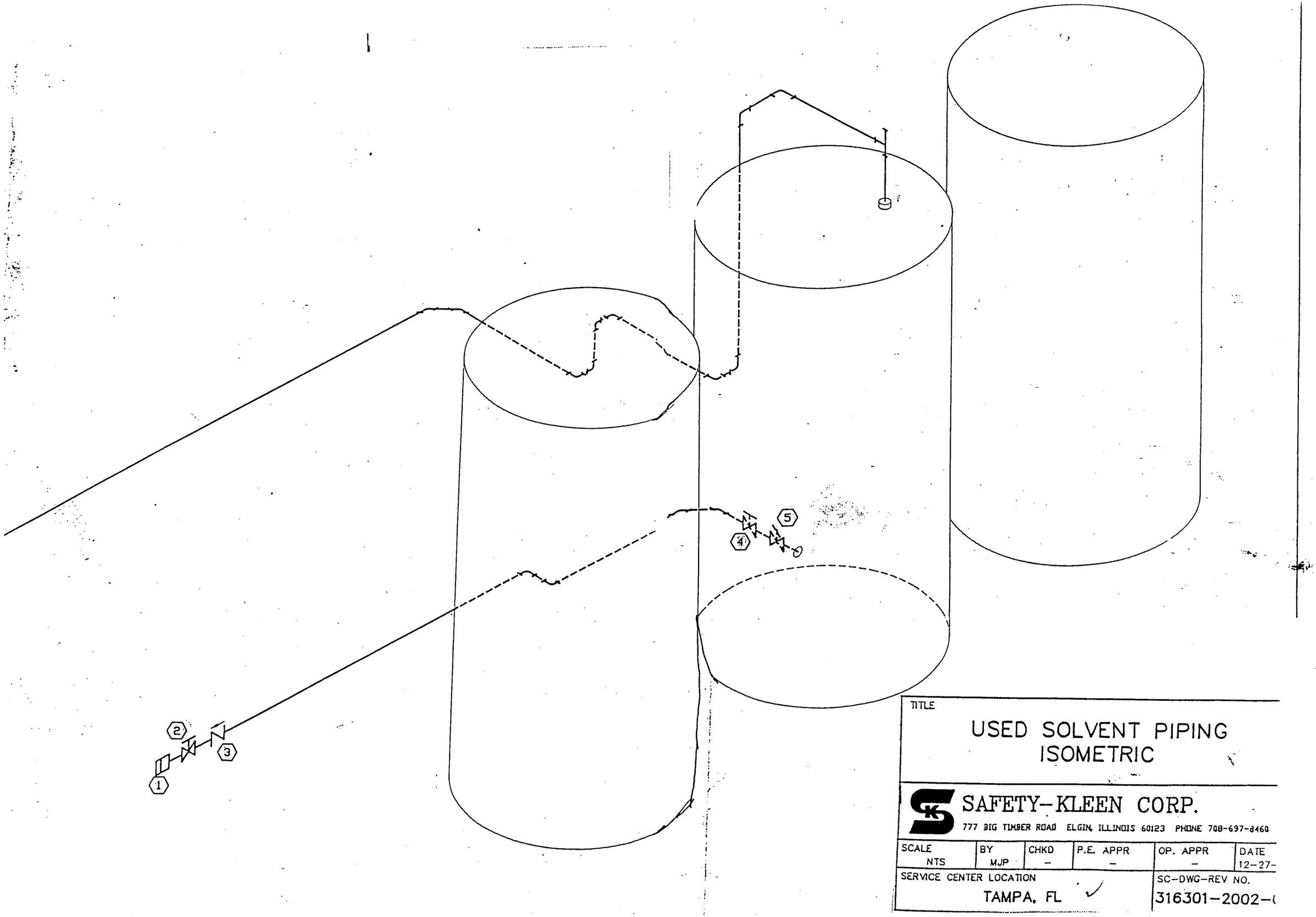

TITLE

USED SOLVENT PIPING ISOMETRIC

SAFETY-KLEEN CORP.

777 BIG TIMBER ROAD ELGIN, ILLINOIS 60123 PHONE 708-697-8460

SCALE	BY	CHKD	P.E. APPR	OP. APPR	DATE
NTS	MJP	–	–	–	12-27-

SERVICE CENTER LOCATION	SC-DWG-REV NO.
TAMPA, FL	316301-2002-(