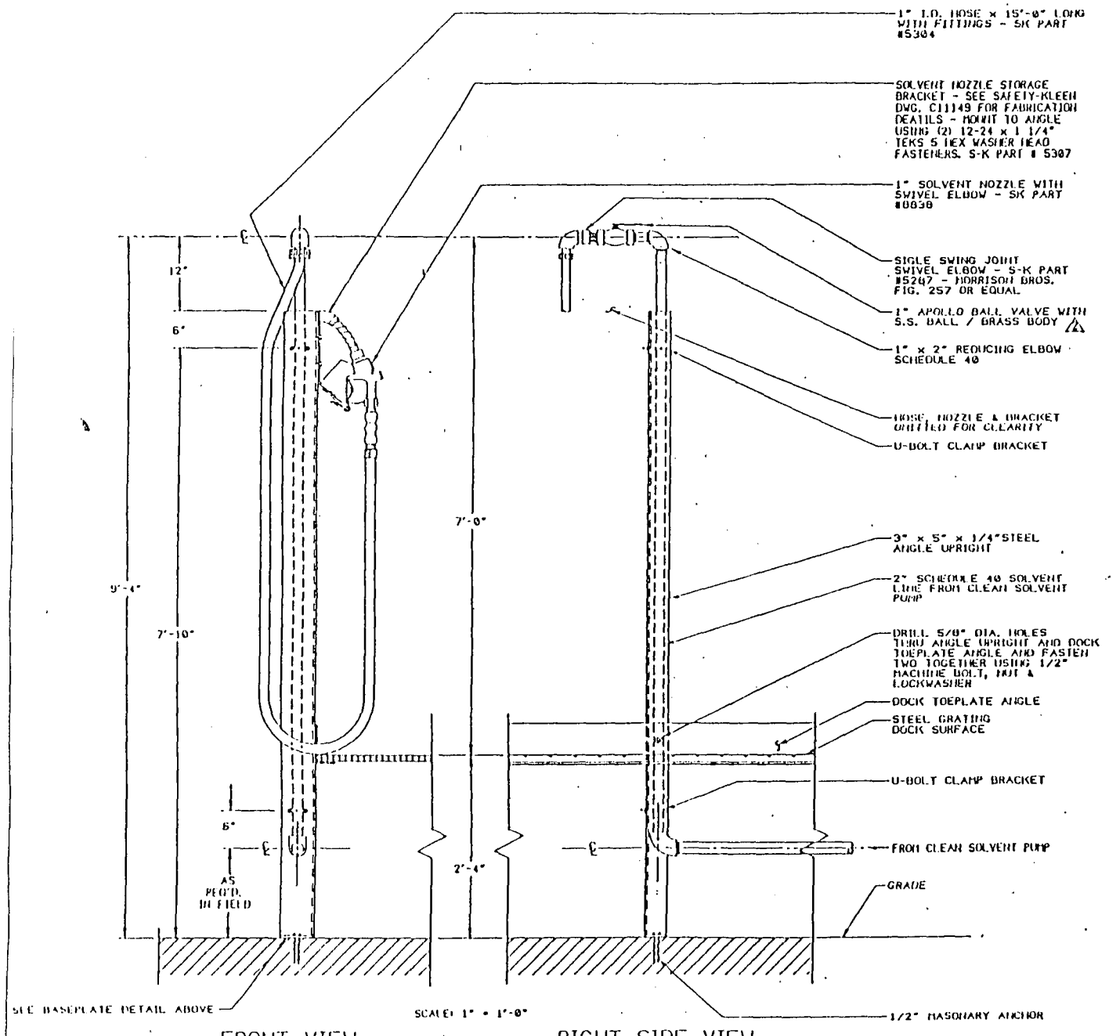



## NOTE:

SURPLUS HOSE LENGTH CAN BE COILED & STORED ON ARM PROVIDED AT SIDE OF NOZZLE STORAGE BRACKET.

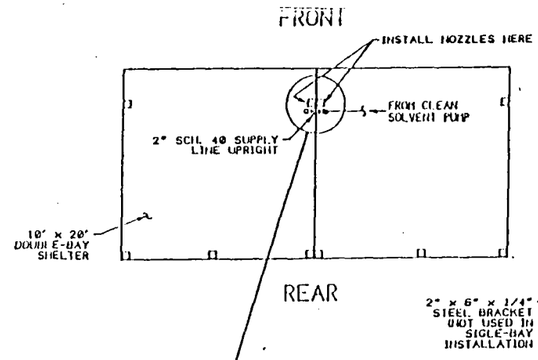
## BASEPLATE DETAIL

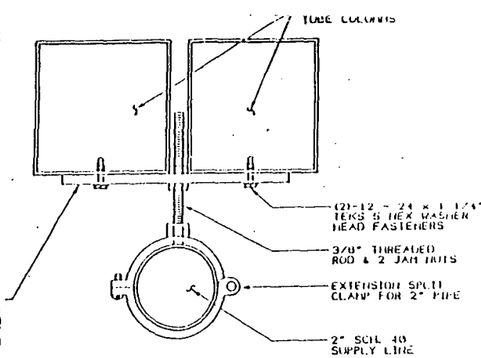
SCALE: 3" = 1'-0"

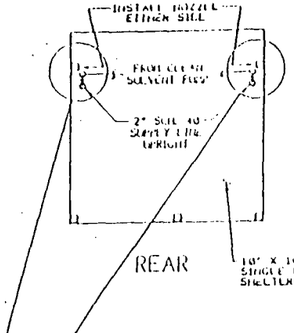



FRONT VIEW — SCALE: 1" = 1'-0" — RIGHT SIDE VIEW

## INSTALLATION FOR STANDARD BUILDING PLAN

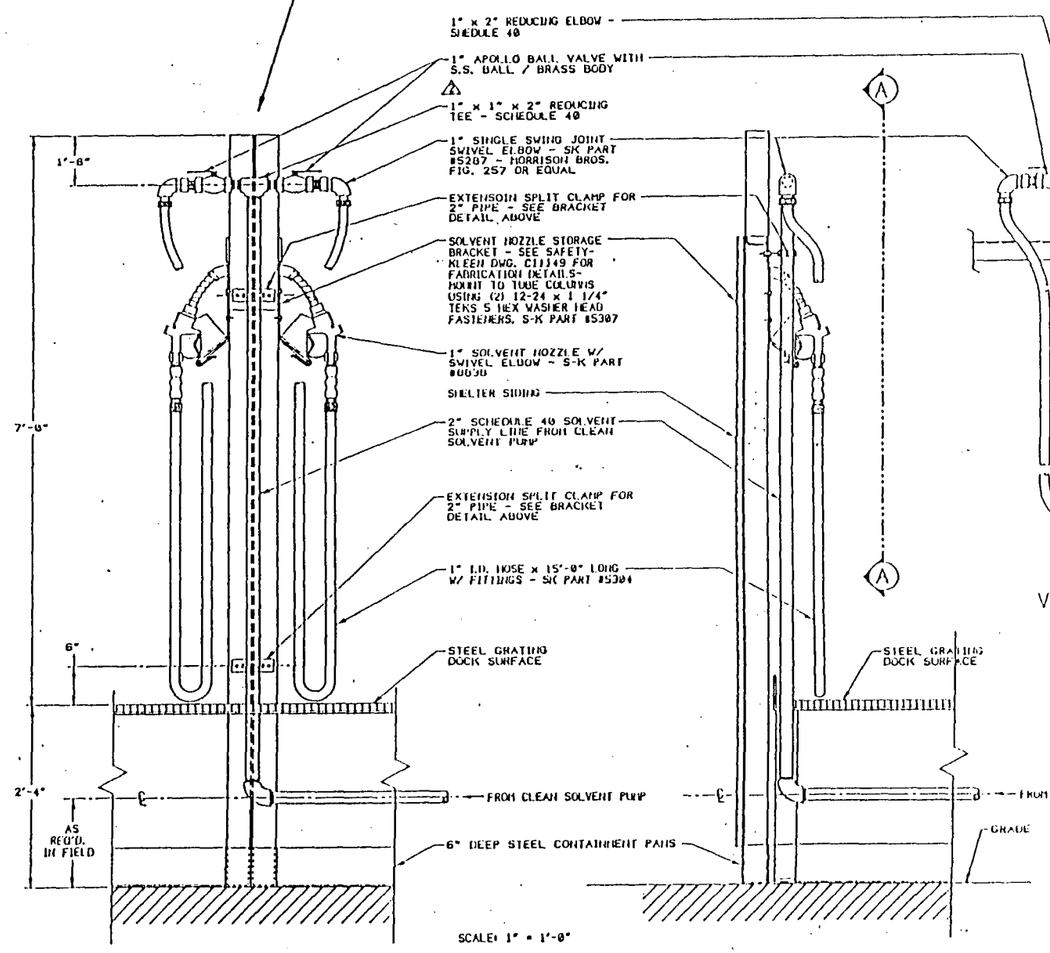



## BRACKET DETAIL

HALF SCALE




SCALE: 1" = 1'-0"

DOUBLE OR MULTIPLE BAY INSTALLATION — SINGLE BAY INSTALLATION

VIEW A-A

THIS DRAWING HAS BEEN PREPARED [illegible] FOR INCLUSION [illegible] IS NEITHER [illegible] TO BE USED [illegible] OR MATERIAL [illegible], CONSTRUCTION, OR ANY OTHER PURPOSE.

Figure II.C.2-3

## NOTES:

1. ALL ITEMS WITH SAFETY-KLEEN PART NO.,REFERENCES WILL BE SUPPLIED TO CONTRACTOR.
2. THIS DRAWING CONTAINS INFORMATION PROPRIETARY TO SAFETY-KLEEN CORP. ANY REPRODUCTION, DISCLOSURE OR USE OF THIS DRAWING IS EXPRESSLY PROHIBITED EXCEPT BY SAFETY-KLEEN OR AS SAFETY-KLEEN MAY AGREE IN WRITING.
3. THIS DRAWING SUPERCEDES SAFETY-KLEEN DRAWINGS C10219 & C10961.
4. SEE INDIVIDUAL SERVICE CENTER PLANS FOR LOCATION OF THESE DETAILS.

| | | | | |
|---|---|---|---|---|
| 2 | ADDED BALL VALVE | RD | | |
| 1 | ADDED NOTE 3 & REFERENCED NOTES | MJ | | |
| NO. | DESCRIPTION | BY | CHD | APP'D |

REVISIONS

TITLE: SOLVENT DISPENSER TREE INSTALLATION DETAILS

SAFETY-KLEEN CORP.

| | | | |
|---|---|---|---|
| DRAWN DATE: APR. | UPDATED: APR. | SCALE: AS SHOWN | DRAWN: 11-20-90 |
| BRANCH: FOR SERVICE CENTER BRANCH | | DRAWING NO.: 011223 | |

011
2222200-GD