RCRA CONSTRUCTION PERMIT APPLICATION
SAFETY-KLEEN CORP.
MEDLEY, FLORIDA

April 25, 1990
by
Safety-Kleen Corp.

Revised: 11/08/90 by ERM-South

Revised: 02/01/92 by ERM-South

Prepared for:

Safety-Kleen Corp.
777 Big Timber Road
Elgin, Illinois 60123

Prepared by:

Environmental Resources Management-South, Inc.
9501 Princess Palm Avenue, Suite 100
Tampa, Florida 33619
(813) 622-8727

Revision 3 - 02/01/92

safety-kleen.

VIA OVERNIGHT MAIL

January 31, 1992

RECEIVED
FEB 4 1992
DEPT. OF ENVIRONMENTAL REG.
WEST PALM BEACH

Mr. Robert Kukleski
Hazardous Waste Section
Florida Department of
Environmental Regulation
1900 South Congress Avenue, Suite A
West Palm Beach, FL 33406

RE: Modification to the Construction Permit Application, Safety-Kleen Corp., Medley, Florida; Permit No. HC13-175466; FLD #984171694

Dear Mr. Kukleski:

Enclosed is a major permit modification and the $15,000 modification fee for the Medley facility.

The major permit modification includes the following:

- Inclusion of a discussion of Fluid Recovery Service wastes which will be managed at the service center as transfer wastes;
- Inclusion of a 20,000-gallon spent ethylene glycol tank;
- Inclusion of TCLP;
- Inclusion of the new dumpster/barrel washers;
- Removal of references to color of containers;
- Removal of references to container sizes except in the container management section;
- Replacement of the Sika-Gard coating with Semstone or equivalent; and

13112.21/TSK10/01/KM013192.LTR/3

777 BIG TIMBER ROAD ELGIN, ILLINOIS 60123 PHONE 708/697-8460 FAX 708/697-4295

- Variations in dimensions and capacities between the final engineering drawings and the permit application as noted by Questec Corp., the construction contractor.

As has been previously discussed with FDER, Safety-Kleen has submitted detailed engineering plans to the appropriate building and permitting agencies in Dade County. Safety-Kleen is awaiting approval from the necessary agencies to commence construction.

If you have any questions or comments, please contact me at 813-682-8094.

Sincerely,

Victor L. San Agustin

Victor L. San Agustin, P.E.
Regional Environmental Engineer
Tampa Region

pjh/ksc

c: Cynthia Norton - ERM

INSTRUCTIONS FOR UPDATING THE CONSTRUCTION PERMIT APPLICATION FOR MEDLEY, FLORIDA

A new document (application) is being provided; however, some items from previous submittals need to be incorporated into this new document.

Sub-Attachment I.B.4-1 is the Surface Water Management Plan submitted November 8, 1990.

REMITTANCE ADVICE

ATTACHED IS OUR CHECK IN FULL SETTLEMENT OF ITEMS SHOWN HEREON

Invoice No.	Date	Voucher	Gross Amount	Discount	Net Amount
APPL FEE	010692	526723	15,000.00		15,000.00

Check No.	Date	Vendor No.	Vendor Name	Total Amount
353442	013192	000009172	FLORIDA DEPT OF ENVIR	15,000.00

SAFETY-KLEEN CORP. 777 Big Timber Road, Elgin, Illinois 60123 708-697-8460 DUNS NO. 05106-0408

70-2382
719

No. 353442

safety-kleen®

777 Big Timber Road
Elgin, Illinois 60123

Check No. 353442

Pay

FIFTEEN THOUSAND AND NO/100 DOLLARS ** DATE 01 31 92 *******15,000.00

To The Order Of

FLORIDA DEPT OF ENVIR REG
1900 S CONGRESS AVE SUITE A
WEST PALM BEACH FL 33406

SAFETY - KLEEN CORP.
AUTHORIZED SIGNATURE

Robert W. Weissenberger

NOT VALID OVER $20,000.

The Northern Trust Company
Payable Through Northern Trust Bank Du Page

⑈353442⑈ ⑆071923828⑆030199740⑈

13112.21/TSK10/02/PARTB.COV/KSC/PJH/1/012492

RCRA CONSTRUCTION PERMIT APPLICATION
SAFETY-KLEEN CORP.
MEDLEY, FLORIDA

April 25, 1990
by
Safety-Kleen Corp.

Revised: 11/08/90 by ERM-South

Revised: 02/01/92 by ERM-South

Prepared for:

Safety-Kleen Corp.
777 Big Timber Road
Elgin, Illinois 60123

Prepared by:

Environmental Resources Management-South, Inc.
9501 Princess Palm Avenue, Suite 100
Tampa, Florida 33619
(813) 622-8727

Revision 3 - 02/01/92

The ERM Group

Land Owner

This is to certify that I, as land owner, understand that this application is submitted for the purpose of obtaining a permit to construct, operate, or close a hazardous waste management facility on the property as described For hazardous waste disposal facilities, I further understand that I am responsible for providing the notice in the deed to the property required by 40 CFR §264.119 and §265.119, as adopted by reference in Chapter 17-730, FAC.

Scott E. Fore

Signature of the Land Owner or Authorized Representative*

SCOTT E. FORE
VICE PRESIDENT - ENVIRONMENT, HEALTH & SAFETY

Name and Title (Please type or print)

Date: 12/6/91 Telephone: (708) 468-2480

*Attach a letter of authorization

4. Professional Engineer Registered in Florida [Complete when required by Chapter 471, F.S. or not exempted by Rule 17-730.220(5), F.A.C.]

This is to certify that the engineering features of this hazardous waste management facility have been designed/examined by me and found to conform to engineering principles applicable to such facilities. In my professional judgment, this facility, when properly constructed, maintained and operated, or closed, will comply with all applicable statutes of the State of Florida and rules of the Department of Environmental Regulation.

Victor E. Hiatt

Signature

Victor E. Hiatt

Name (please type)

Florida Registration Number: 26787

Mailing Address: 9501 Princess Palm Ave. Suite 100
Street or P.O. Box

Tampa, FL 33169
City State Zip

Date: 12-23-91 Telephone (813) 622-8727

[PLEASE AFFIX SEAL]

APPLICATION FOR A HAZARDOUS WASTE FACILITY PERMIT
CERTIFICATION
TO BE COMPLETED BY ALL APPLICANTS

Facility name: Medley, FL EPA ID#

1. Operator

I certify under penalty of law that this document and all attachments were prepared under my direction or supervision in accordance with a system designed to assure that qualified personnel properly gathered and evaluated the information submitted. Based on my inquiry of the person or persons who manage the system, or those persons directly responsible for gathering the information, the information submitted is, to the best of my knowledge and belief, true, accurate, and complete. I am aware that there are significant penalties for submitting false information, including the possibility of fine and imprisonment for knowing violations. Further, I agree to comply with the provisions of Chapter 403, Florida Statutes, and all rules and regulations of the Department of Environmental Regulation. It is understood that the permit is only transferable in accordance with Section 17-730, FAC, and, if granted a permit, the Department of Environmental Regulation will be notified prior to the sale or legal transfer of the permitted facility.

Scott E. Fore

Signature of the Operator or Authorized Representative*

SCOTT E. FORE
VICE PRESIDENT - ENVIRONMENT, HEALTH & SAFETY

Name and Title (Please type or print)

Date: 12/6/91 Telephone: (708) 468-2480

2. Facility Owner

This is to certify that I understand this application is submitted for the purpose of obtaining a permit to construct, operate, or close a hazardous waste management facility on the property as described. As owner of the facility, I understand fully that the facility operator and I are jointly responsible for compliance with the provisions of Chapter 403, Florida Statutes, and all rules and regulations of the Department of Environmental Regulation.

Scott E. Fore

Signature of the Facility Owner or Authorized Representative*

SCOTT E. FORE
VICE PRESIDENT - ENVIRONMENT, HEALTH & SAFETY

Name and Title (Please type or print)

Date: 12/6/91 Telephone: (708) 468-2480

*Attach a letter of authorization

TABLE OF CONTENTS

TABLE OF CONTENTS (Continued)

LIST OF FIGURES

LIST OF FIGURES (Continued)

TABLE OF CONTENTS (Continued)

LIST OF TABLES

LIST OF TABLES

PART I

GENERAL FACILITY INFORMATION

APPLICATION FOR A HAZARDOUS WASTE FACILITY PERMIT
PART I - GENERAL
TO BE COMPLETED BY ALL APPLICANTS

Please Type or Print

A. General Information

1. Type of facility:

Disposal [ ]			
landfill	[ ]	land treatment	[ ]
surface impoundment	[ ]	miscellaneous units	[ ]
Storage [x]			
containers	[x]	tanks	[x]
piles	[ ]	surface impoundment	[ ]
miscellaneous units	[ ]		
Treatment [ ]			
tanks	[ ]	piles	[ ]
incineration	[ ]	surface impoundment	[ ]
miscellaneous units	[ ]		

2. Type of application: [ ] TOP [x] construction [ ] operation [ ] closure [ ] RD&D

3. Application submittal: [ ] new [x] revised

4. Date current operation began (or is expected to begin): 1/05/91

5. Facility name: Safety - Kleen Corp.

6. EPA/DER I.D. No.: Applied for

7. Facility location or street address: East of NW 89th Ave & NW 96th St. Medley, FL 3316

8. Facility mailing address: 777 Big Timber Rd. Elgin, IL 60123
Street or P.O. Box City State Zip

9. Contact person: Victor San Agustin Telephone: (708) 697-8460

Title: Environmental Regional Engineer

Mailing Address: 777 Big Timber Td. Elgin, IL 60123
Street or P.O. Box City State Zip

10. Operator's name: Safety-Kleen Corp. Telephone: (708) 697-8460

11. Operator's address: 777 Big Timber Rd. Elgin, IL 60123
Street or P.O. Box City State Zip

12. Facility owner's name Safety - Kleen Corp. Telephone: (708) 697-8460

13. Facility owner's address: 777 Big Timber Rd. Elgin, IL 60123
Street or P.O. Box City State Zip

14. Legal structure: [X] Corporation [ ] Non-profit Corporation [ ] Partnership [ ] Individual
[ ] Local Government [ ] State Government [ ] Federal Government [ ] Other

15. If an individual, partnership, or business is operating under an assumed name, specify the county and state where the name is registered.

County:_____ State: N/A

16. If the legal structure is a corporation, indicate the state of incorporation.

State of incorporation: Wisconsin

17. If the legal structure is an individual or partnership, list the owners.

Name:_____

Address:_____
Street or P.O. Box City State Zip

Name:_____

Address:_____
Street or P.O. Box City State Zip

Name:_____

Address:_____
Street or P.O. Box City State Zip

Name:_____

Address:_____
Street or P.O. Box City State Zip

18. Site ownership status: [X] owned [ ] to be purchased [ ] to be leased_____years
[ ] presently leased; the expiration date of the lease is:_____

If leased, indicate:

Land owner's name: Safety Kleen Corp.

Land owner's address: 777 Big Timber Rd. Elgin, IL 60123
Street or P.O. Box City State Zip

19. Name of engineer: Victor E. Hiatt Registration no.: 26787

Address: 9501 Princess Palm Ave. Ste. 100 Tampa, FL 33619
Street or P.O. Box City State Zip

Associated with: Environmental Resources Mgmt. - South

20. Facility located on Indian land: [ ] yes [X] no

21. Existing or pending environmental permits: (attach a separate sheet if necessary)

NAME OF PERMIT	AGENCY	PERMIT NUMBER	DATE ISSUED	EXPIRATION DATE
Haz. Waste Construction Permit	FDER	HC 13-175466	3-1-91	3-1-92

B. Site Information

1. Facility location County: Dade Nearest Community: Medley

Latitude: N 25° 51' 90" Longitude: W80° 20' 25"

2. Area of facility site (acres): 450

3. Attach a scale drawing and photographs of the facility showing the location of all past, present, and future treatment, storage and disposal areas. Also show the hazardous wastes traffic pattern including estimated volume and control.

4. Attach topographic map which show all the features indicated in the instruction sheet for this part.

5. Is the site located in a 100-year flood plain? [ ] yes [X] no

C. Land Use Information

1. Present zoning of the site M-1 Light Manufacturing/Industry

2. If a zoning change is needed, what should the new zoning be? N/A

3. Present land use of site Undeveloped - to be industrial

D. Operating Information

1. Is waste generated on site? [X] yes [ ] no

   List the SIC codes (4-digit)

   7399 5172 5084 5013 _____ _____ _____

2. Attach a brief description of the facility operation, nature of the business, and activities that generate, treat, store or dispose of hazardous waste. See Attachment I D 2

3. Using the following table and codes provided, specify, (1) each process used for treating, storing, or disposing of hazardous waste (including design capacities) at the facility, and (2) the hazardous waste (or wastes) listed or designated in 40 CFR Part 261, including the annual quantities, to be treated, stored, or disposed by each process at the facility. (See the instructions for the list of process codes and units).

   See Attachment 1

PROCESS CODE	PROCESS DESIGN CAPACITY AND UNITS OF MEASURE	HAZARDOUS WASTE CODE	ANNUAL QUANTITY OF HAZARDOUS WASTE AND UNITS OF MEASURE

ATTACHMENT I.A.21

PERMIT INFORMATION

MAR 0 4 1991

Florida Department of Environmental Regulation

Southeast District • 1900 S. Congress Ave., Suite A • West Palm Beach, Florida 33406

Lawton Chiles, Governor

Carol M. Browner, Secretary

CERTIFIED MAIL
RETURN RECEIPT REQUESTED
MAR 0 1 1991

Dade County
HW - Safety-Kleen/Medley

Mr. Scott E. Fore
Safety-Kleen Corporation
777 Big Timber Road
Elgin, IL 60123

Dear Mr. Fore:

Enclosed is Permit Number HC 13-175466, for the Construction of a Hazardous Waste Storage Facility, issued pursuant to Section 403.722, Florida Statutes.

Any party to this permit has the right to seek judicial review of the permit pursuant to Section 120.68, Florida Statutes, by the filing of a Notice of Appeal pursuant to Rule 9.110, Florida Rules of Appellate Procedure, with the Clerk of the Department in the Office of General Counsel, 2600 Blair Stone Road, Tallahassee, Florida 32399-2400; and by filing a copy of the Notice of Appeal accompanied by the applicable filing fees with the appropriate District Court of Appeal. The Notice of Appeal must be filed within 30 days from the date this Notice is filed with the Clerk of the Department.

Acceptance of the permit constitutes notice and agreement that the Department will periodically review this permit for compliance, including site inspections where applicable.

Executed in West Palm Beach, Florida.

STATE OF FLORIDA
DEPARTMENT OF ENVIRONMENTAL REGULATION

for B. Padin Ph.D

J. Scott Benyon
Deputy Assistant Secretary
1900 South Congress Avenue, Suite A
West Palm Beach, FL 33406
407/433-2650

FILING AND ACKNOWLEDGEMENT

FILED, on this date, pursuant to S120.52 Florida Statutes, with the designated Department Clerk, receipt of which is hereby acknowledged.

R Hilman — Clerk
3-1-91 — Date

JSB:jl:rh/23

Copies furnished to:

cc: Satish Kastury, DER/Tallahassee
DERM
Mayor Stephen P. Clark, Dade County
Rep. Ronald A. Silver
Rep. Elaine Gordon
Rep. Elaine Bloom
Rep. Jefferson Reaves, Sr.
Rep. Willie Logan, Jr.
Rep. Mario Diaz-Balart
Rep. Luis Morse
Rep. Ron Saunders
Rep. Susan Guber
Rep. Miguel DeGrandy
Rep. Daryl Jones
Sen. Lincoln Diaz-Balart
Sen. Carrie P. Meek
Sen. Larry H. Plummer
James Scarbrough/EPA Region IV, Atlanta
Tobie Wilson, Mayor, Town of Medley
Alexander Penelas
Rep. Michael I. Abrams
Rep. Michael Friedman
Rep. Alberto Gutman
Rep. James C. Burke
Rep. Luis E. Rojas
Rep. Carlos L. Valdes
Rep. Bruce Hoffman
Rep. Art Simon
Rep. John Cosgove
Rep. Rodolfo Garcia, Jr.
Sen. Roberto Casas
Sen. Jack D. Gordon
Sen. Gwen Margolis
Sen. Javier Souto

CERTIFICATE OF SERVICE

This is to certify that this NOTICE OF PERMIT and all copies were mailed before the close of business on MAR 0 1 1991 to the listed persons.

Florida Department of Environmental Regulation
Southeast District • 1900 S. Congress Ave. Suite A • West Palm Beach, Florida 33406
Lawton Chiles, Governor
Carol M. Browner, Secretary

PERMITTEE: I.D. NUMBER:
Safety-Kleen Corporation
777 Big Timber Road
Elgin, IL 60120
Attn: Scott E. Fore,
Vice President

PERMIT/CERTIFICATION NUMBER: HC 13-175466
DATE OF ISSUE: MAR 0 1 1991
EXPIRATION DATE: MAR 0 1 1992
COUNTY: Dade County
LATITUDE/LONGITUDE: N25°51'90"/W80°20'23"
SECTION/TOWNSHIP/RANGE:
PROJECT: Hazardous Waste Storage Facility

This permit is issued under the provisions of Chapter 403, Florida Statutes, and Florida Administrative Code Rules 17-4, 17-730 and in conformance with all existing regulations of the Florida Department of Environmental Regulation. The above named permittee is hereby authorized to perform the work or operate the facility shown on the application and approved drawing(s), plans, and other documents attached hereto or on file with the Department and made a part hereof and specifically described as follows:

TO CONSTRUCT: A Hazardous Waste Storage Facility consisting of a container storage area and an above-ground storage tank.

The container storage area will be equipped with the following features: impervious floors with slopes toward spill containment areas, fire suppression system and controlled access (inside fenced area with locked gate). The capacity of the container storage area will be 6912 gallons (432 16-gallon containers, or the equivalent). The hazardous waste to be stored in the containers is as follows:

Dumpster Sediment	D001, D006, D007, D008
Spent Immersion Cleaner	F002, F004
Dry Cleaning Wastes	F002 or D001
Paint Wastes	F003, F005, D001, D006, D007, D008

The capacity of the above-ground storage tank is 20,000 gallons and the waste to be stored in the tank is waste mineral spirits (D001, D006, D008). The tank will be constructed with secondary containment/leak detection system.

IN ACCORDANCE WITH: Application DER Form 17-730.900(2) dated January 26, 1990 and with additional information submitted May 1, 1990, November 12, 1990, and Public Notice dated January 11, 1991.

LOCATED AT: Safety-Kleen Corporation, N.W. 96 St. and N.W. 89th Avenue, Medley, Florida.

SUBJECT TO: General Conditions 1-16 and Specific Conditions 1-10.

ITEE:
cy-Kleen Corporation
/Big Timber Road
gin, IL 60120

I.D. NUMBER:
PERMIT/CERTIFICATION NUMBER: HC 13-175466
DATE OF ISSUE: MAR 0 1 1991
EXPIRATION DATE:
MAR 0 1 1992

ENERAL CONDITIONS:

1. The terms, conditions, requirements, limitations and restrictions set forth in this permit, are "permit conditions" and are binding and enforceable pursuant to Sections 403.141, 403.727, or 403.859 through 403.861, F.S. The permittee is placed on notice that the Department will review this permit periodically and may initiate enforcement action for any violation of these conditions.

2. This permit is valid only for the specific processes and operations applied for and indicated in the approved drawings or exhibits. Any unauthorized deviation from the approved drawings, exhibits, specifications, or conditions of this permit may constitute grounds for revocation and enforcement action by the Department.

3. As provided in subsections 403.087(6) and 403.722(5), F.S., the issuance of this permit does not convey any vested rights or any exclusive privileges. Neither does it authorize any injury to public or private property or any invasion of personal rights, nor any infringement of federal, state, or local laws or regulations. This permit is not a waiver of or approval of any other Department permit that may be required for other aspects of the total project which are not addressed in this permit.

4. This permit conveys no title to land or water, does not constitute State recognition or acknowledgement of title, and does not constitute authority for the use of submerged lands unless herein provided and the necessary title or leasehold interests have been obtained from the State. Only the Trustees of the Internal Improvement Trust Fund may express State opinion as to title.

5. This permit does not relieve the permittee from liability for harm or injury to human health or welfare, animal, or plant life, or property caused by the construction or operation of this permitted source, or from penalties therefore; nor does it allow the permittee to cause pollution in contravention of Florida Statutes and Department rules, unless specifically authorized by an order from the Department.

6. The permittee shall properly operate and maintain the facility and systems of treatment and control (and related appurtenances) that are installed and used by the permittee to achieve compliance with the conditions of this permit, are required by Department rules. This provision includes the operation of backup or auxiliary facilities or similar systems when necessary to achieve compliance with the conditions of the permit and when required by Department rules.

7. The permittee, by accepting this permit, specifically agrees to allow authorized Department personnel, upon presentation of credentials or other documents as may be required by law and at reasonable times, access to the premises where the permitted activity is located or conducted to:

(a) Have access to and copy any records that must be kept under conditions of the permit;
(b) Inspect the facility, equipment, practices, or operations regulated or required under this permit; and
(c) Sample or monitor any substances or parameters at any location reasonably necessary to assure compliance with this permit or Department rules.

Reasonable time may depend on the nature of the concern being investigated.

8. If, for any reason, the permittee does not comply with or will be unable to comply with any condition or limitation specified in this permit, the permittee shall immediately provide the Department with the following information:

(a) A description of and cause of noncompliance; and
(b) The period of noncompliance, including dates and times; or, if not corrected, the anticipated time the noncompliance is expected to continue, and steps being taken to reduce, eliminate, and prevent recurrence of the noncompliance. The permittee shall be responsible for any and all damages which may result and may be subject to enforcement action by the Department for penalties or for revocation of this permit.

9. In accepting this permit, the permittee understands and agrees that all records, notes, monitoring data and other information relating to the construction or operation of this permitted source which are submitted to the Department may be used by the Department as evidence in any enforcement case involving the permitted source arising under the Florida Statutes or Department rules, except where such use is prescribed by Section 403.111 and 403.73, F.S. Such evidence shall only be used to the extent it is consistent with the Florida Rules of Civil Procedure and appropriate evidentiary rules.

PERMITTEE:
Safety-Kleen Corporation
777 Big Timber Road
Elgin, IL 60120

I.D. NUMBER:
PERMIT/CERTIFICATION NUMBER: HC 13-175466
DATE OF ISSUE: MAR 0 1 1991
EXPIRATION DATE: MAR 0 1 1992

GENERAL CONDITIONS Cont'd:

10. The permittee agrees to comply with changes in Department rules and Florida Statutes after a reasonable time for compliance; provided, however, the permittee does not waive any other rights granted by Florida Statutes or Department rules.

11. This permit is transferable only upon Department approval in accordance with Rule 17-4.120 and 17-30.300, F.A.C., as applicable. The permittee shall be liable for any non-compliance of the permitted activity until the transfer is approved by the Department.

12. This permit or a copy thereof shall be kept at the work site of the permitted activity.

13. This permit also constitutes:

(a) Determination of Best Available Control Technology (BACT)

(b) Determination of Prevention of Significant Deterioration (PSD)

(c) Certification of compliance with state Water Quality Standards (Section 401, PL 92-500)

(d) Compliance with New Source Performance Standards

14. The permittee shall comply with the following:

(a) Upon request, the permittee shall furnish all records and plans required under Department rules. During enforcement actions, the retention period for all records will be extended automatically unless otherwise stipulated by the Department.
(b) The permittee shall hold at the facility or other location designated by this permit records of all monitoring information (including all calibration and maintenance records and all original strip chart recordings for continuous monitoring instrumentation) required by the permit, copies of all reports required by this permit, and records of all data used to complete the application for this permit. These materials shall be retained at least three years from the date of the sample, measurement, report, or application unless otherwise specified by Department rule.
(c) Records of monitoring information shall include:

1. the date, exact place, and time of sampling or measurements;
2. the person responsible for performing the sampling or measurements;
3. the dates analyses were performed;
4. the person responsible for performing the analyses;
5. the analytical techniques or methods used;
6. the results of such analyses.

15. When requested by the Department, the permittee shall within a reasonable time furnish any information required by law which is needed to determine compliance with the permit. If the permittee becomes aware the relevant facts were not submitted or were incorrect in the permit application or in any report to the Department, such facts or information shall be corrected promptly.

16. In the case of an underground injection control permit, the following permit conditions also shall apply:

(a) All reports or information required by the Department shall be certified as being true, accurate and complete.
(b) Reports of compliance or noncompliance with, or any progress reports on, requirements contained in any compliance schedule of this permit shall be submitted no later than 14 days following each schedule date.
(c) Notification of any noncompliance which may endanger health or the environment shall be reported verbally to the Department within 24 hours and again within 72 hours, and a final written report provided within two weeks.

1. The verbal reports shall contain any monitoring or other information which indicate that any contaminant may endanger an underground source of drinking water and any noncompliance with a permit condition or malfunction of the injection system which may cause fluid migration into or between underground sources of drinking water.

PERMITTEE:
Safety-Kleen Corporation
777 Big Timber Road
Elgin, IL 60120

I.D. NUMBER:
PERMIT/CERTIFICATION NUMBER: HC 13-175466
DATE OF ISSUE: MAR 0 1 1991
EXPIRATION DATE: MAR 0 1 1992

GENERAL CONDITIONS Cont'd:

16. The following conditions also shall apply to a hazardous waste facility permit.

(a) The following reports shall be submitted to the Department:

1. Manifest discrepancy report. If a significant discrepancy in a manifest is discovered, the permittee shall attempt to rectify the discrepancy. If not resolved within 15 days after the waste is received, the permittee shall immediately submit a letter report, including a copy of the manifest, to the Department.

2. Unmanifested waste report. The permittee shall submit an unmanifested waste report to the Department within 15 days of receipt of unmanifested waste.

3. Annual report. An annual report covering facility activities during the previous calendar year shall be submitted pursuant to Chapter 17-30, F.A.C.

(b) Notification of any noncompliance which may endanger health or the environment, including the release of any hazardous waste that may endanger public drinking water supplies or the occurrence of a fire or explosion from the facility which could threaten the environment or human health outside the facility, shall be reported verbally to the Department within 24 hours, and a written report shall be provided within 5 days. The verbal report shall include the name, address, I.D. number, and telephone number of the facility, its owner or operator, the name and quantity of materials involved, the extent of any injuries, an assessment of actual or potential hazards, and the estimated quantity and disposition of recovered material. The written submission shall contain:

1. A description and cause of the noncompliance.

2. If not corrected, the expected time of correction, and the steps being taken to reduce, eliminate, and prevent recurrence of the noncompliance.

(c) Reports of compliance or noncompliance with, or any progress reports on, requirements in any compliance schedule shall be submitted no later than 14 days after each schedule date.

(d) All reports or information required by the Department by a hazardous waste permittee shall be signed by a person authorized to sign a permit application.

PERMITTEE:
Safety-Kleen Corporation
777 Big Timber Road
Elgin, IL 60120

I.D. NUMBER:
PERMIT/CERTIFICATION NUMBER: HC 13-175466
DATE OF ISSUE: MAR 0 1 1991
EXPIRATION DATE: MAR 0 1 1992

SPECIFIC CONDITIONS:

1. This permit authorizes construction only of the facility described in the application. The Department shall be notified and prior approval shall be obtained of any changes or revisions made during construction.

2. The permittee shall retain the engineer of record for the inspection of the construction of the project. Upon completion, the engineer shall inspect for conformity to the permit application and additional information submitted and shall so certify to the Department. Such certification is to be submitted within 30 days after completion.

3. The permittee, in accordance with 40 CFR 264.192(b), shall provide a professional engineer registered in the State of Florida to monitor and/or visually inspect the tank installation in order to identify the presence of any of the following items:
(a) weld breaks
(b) punctures
(c) scrapes in the protective coatings
(d) cracks
(e) corrosion
(f) other structural damage or inadequate construction/installation

All discrepancies must be remedied before the tank system is placed in use.

4. Upon completion of construction of the tank, the permittee shall perform a tightness test using hydrostatic pressure by preloading the tank with water before hazardous waste storage.

5. At a minimum, the permittee shall equip the facility with the equipment specified in the application, as required by 40 CFR 264.32.

6. The completed construction of the container storage shall be in compliance with 40 CFR 264.175 and 40 CFR 264.176.

7. The completed construction of the above-ground tank system shall be in compliance with 40 CFR 264.193 and 40 CFR 264.198.

8. The permittee may <u>not</u> commence storage of hazardous waste at the facility until:
(a) The permittee has submitted the engineering certification of construction in compliance with the permit application;
(b) The Department has inspected the newly constructed facility and finds it in compliance with the conditions of the permit, and other applicable state regulations;
(c) The Department has issued an Operation Permit to the facility;
(d) Personnel training has been completed.

9. The permittee shall submit an application for an Operation Permit at least 90 days prior to expiration of this permit.

10. The Department may modify the conditions in this permit upon written request of the permittee in accordance with FAC Rule 17-730.290(3).

Issued this 1st day of March 1991

STATE OF FLORIDA
DEPARTMENT OF ENVIRONMENTAL REGULATION

for A. Padron Ph.D

J. Scott Benyon
Deputy Assistant Secretary

ATTACHMENT I.B.3

FACILITY LAYOUT AND PHOTOGRAPHS

ATTACHMENT I.B.3
FACILITY LAYOUT AND PHOTOGRAPHS

The service center (i.e., facility) layout and traffic patterns are illustrated in Figures I.B.3-1 and I.B.3-2, respectively.

The non-building areas of the facility will be paved with asphalt or concrete as noted on the site plan (Figure I.B.3-1). The stormwater retention areas and other unpaved areas will be vegetated with grass. The majority of the vehicular traffic and loading/unloading operations will occur at and near the return and fill (area A) and it will be paved with asphalt and concrete (Figure I.B.3-2). Approximately once per week a tractor trailer will bring fresh drummed solvents and remove used, drummed solvents for transfer to a recycle facility. This truck will back up to the eastern side of the concrete dock, located on the northern side of the facility in area B, to load and unload drums. Area C will be used for the loading/unloading of transfer wastes, and containerized permitted wastes from local area vans and trucks. Traffic from this facility is not expected to have a major effect on local traffic conditions.

Route 286 is the major access road to the facility. The access road is designed in accordance with engineering criteria appropriate for sustaining the traffic volume and loading for the industrial activities in this area. The vans that will travel the routes daily between the service center and Safety-Kleen customers will use the two-lane road within the industrial park. The trucks dispatched from the recycle center to deliver and pick up fresh and used mineral spirits and ethylene glycol will perform these activities at the aboveground tank area D approximately once per week. Traffic from this facility is not expected to have a major effect on local traffic conditions.

Photographs which depict the hazardous waste management units, security features, and general layout of the facility will be provided after the site is constructed as a part of the operating permit application.

Figure I.B.3-1
Site Layout Map
Safety-Kleen Corp. Facility
Medley, Florida

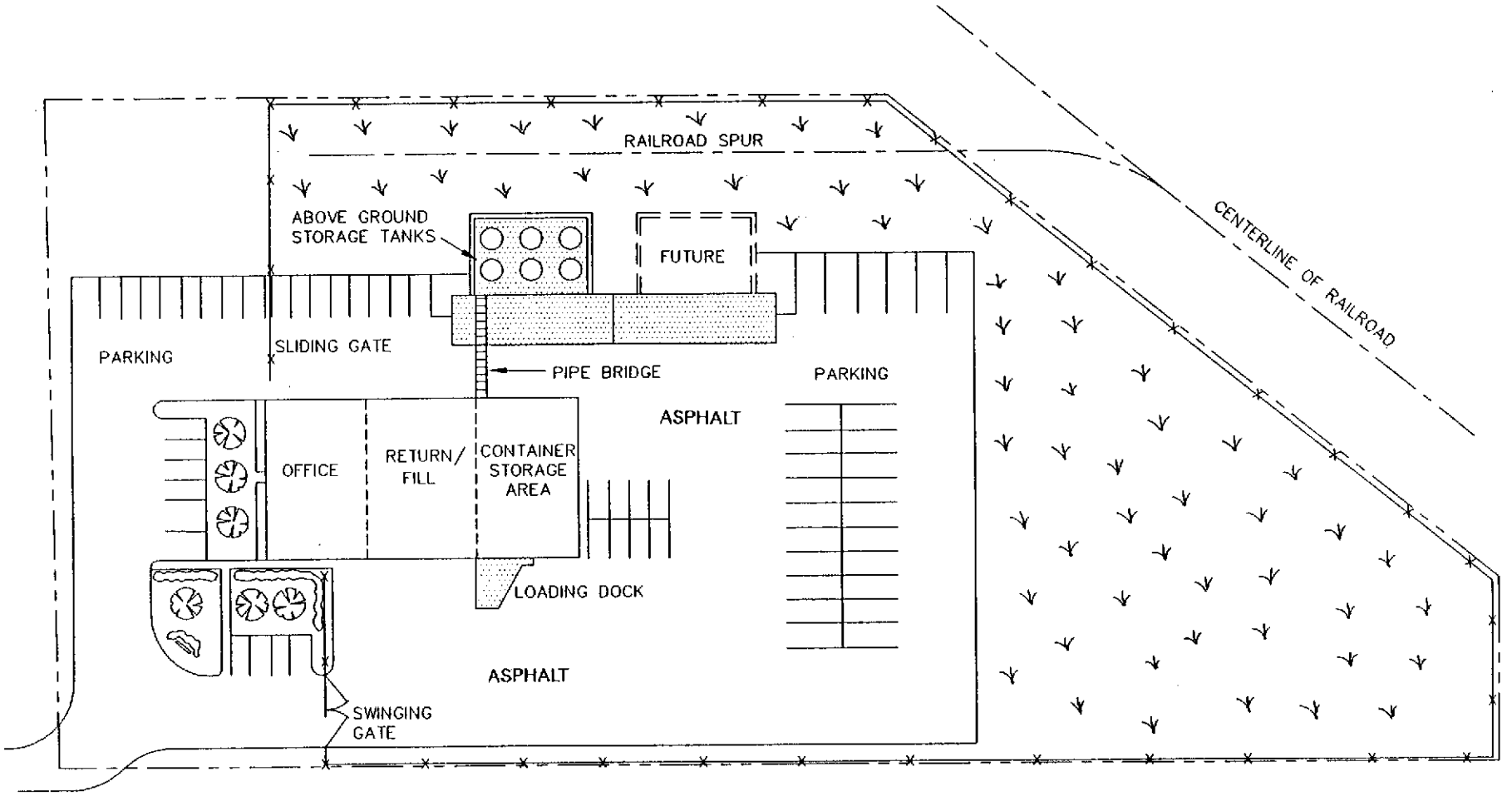

LEGEND

PROPERTY BOUNDARY

CHAIN-LINK FENCE

CONCRETE

GRASS

N

0 80

FEET

13112.21/31121BM/012792-2

I.B.3-1A

The ERM Group

Figure I.B.3-2
Loading/Unloading Locations
Safety-Kleen Corp. Facility
Medley, Florida

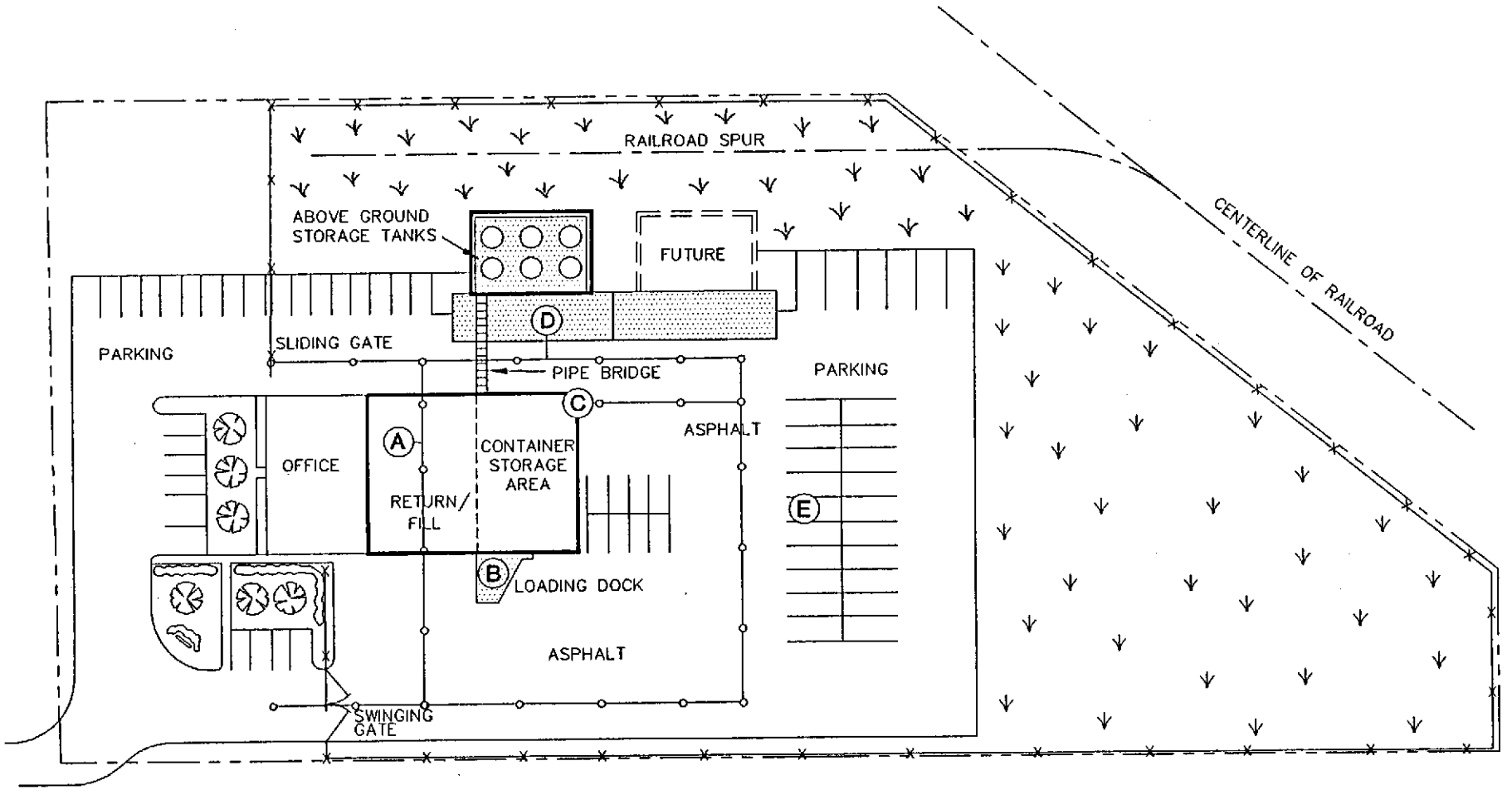

LEGEND

HAZARDOUS WASTE MANAGEMENT AREAS

ENTRANCE/EXIT ROUTE

(A) MINERAL SPIRIT DRUM DUMP/BARREL WASH/REFILL

(B) LOADING & UNLOADING OF DRUMS CONTAINING SOLVENTS FROM TRUCKS

(C) LOADING & UNLOADING OF CONTAINERIZED WASTE FROM LOCAL AREA VANS & TRUCKS

(D) LOADING & UNLOADING OF MINERAL SPIRITS AND ETHYLENE GLYCOL

(E) TRUCK TO TRUCK TRANSFER OF FRS WASTES
NOTE: THIS OCCURS ON ANY ASPHALT SURFACE EAST OR SOUTH OF THE WAREHOUSE

N

0 80
FEET

The ERM Group ®

ATTACHMENT I.B.4

TOPOGRAPHIC MAP OF THE SITE

ATTACHMENT I.B.4
TOPOGRAPHIC MAP OF THE SITE

A USGS topographic map is supplied in this section to provide information requested (Figure I.B.4-1). However, due to the small size of the site, all of the information requested under I.B.4 of the application form cannot be placed on one map. Therefore, additional maps are referenced that provide information requested.

1. Map scale and dates:
   Supplied on all maps.

2. 100-year floodplain area:
   Based on information available from the Federal Emergency Management Agency (Figure I.B.4-2), the facility does not lie within the 100-year flood plain. The site is located in a Zone AH(EL6). AH areas are areas of 100-year shallow flooding where depths are between one and three feet. Base flood elevations are shown, but no flood hazard factors are determined. This site does not require any special flood management procedures.

3. Orientation of map:
   Supplied on all maps.

4. Surface water bodies within one-quarter mile of the facility property boundary (e.g., intermittent streams and springs):
   There are no known surface water bodies within one-quarter mile of the facility.

5. Surrounding land uses:
   See Figure I.B.4-3.

HIALEAH, FLA.
N2545—W8015/7.5
1962
PHOTOREVISED 1969
AMS 4935 IV SE-SERIES V847

FIGURE I.B.4-1

QUADRANGLE LOCATION

SCALE 1:24000

1 MILE

1000 0 1000 2000 3000 4000 5000 6000 7000 FEET

1 .5 0 1 KILOMETER

CONTOUR INTERVAL 5 FEET
DATUM IS MEAN SEA LEVEL

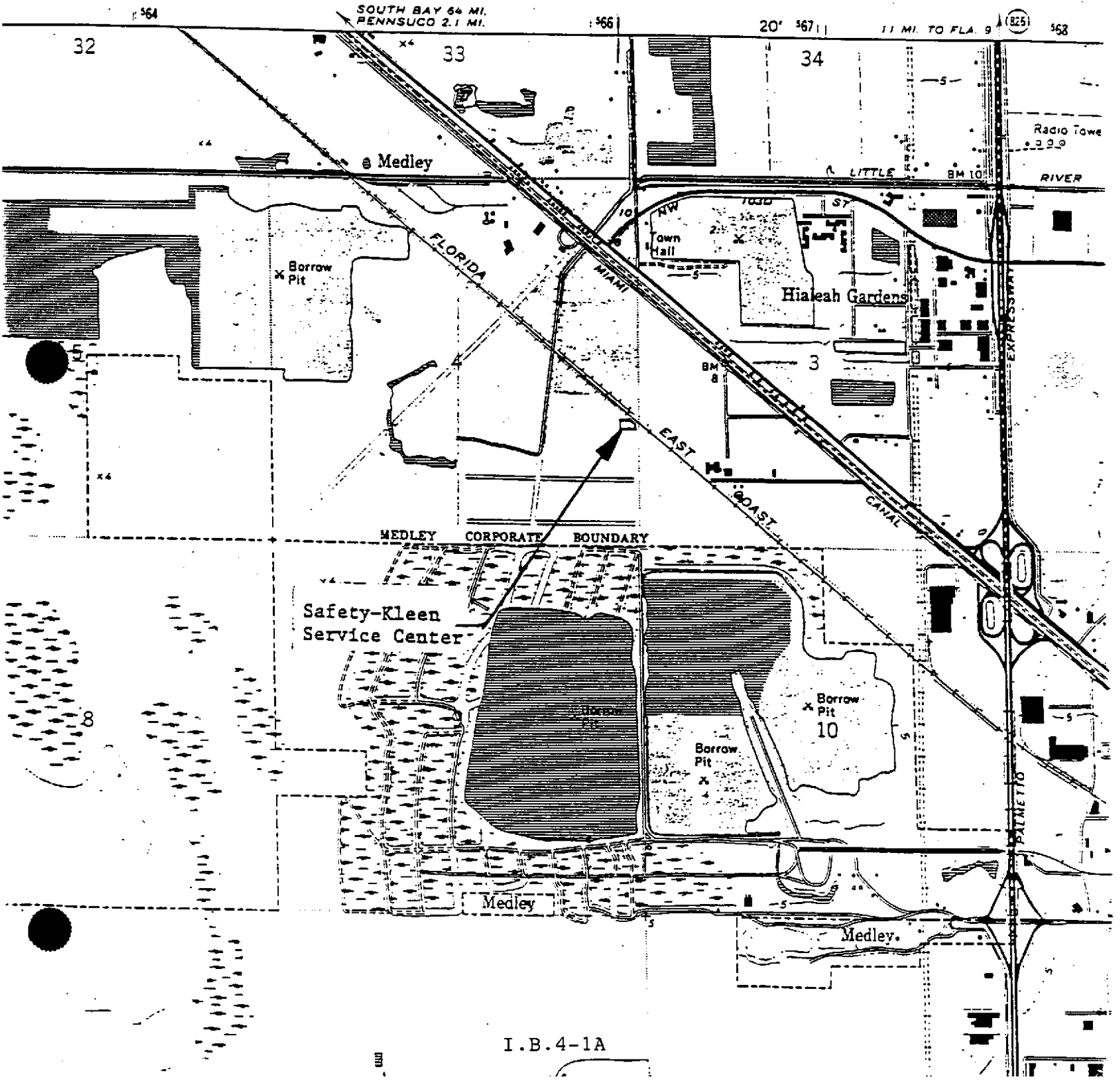

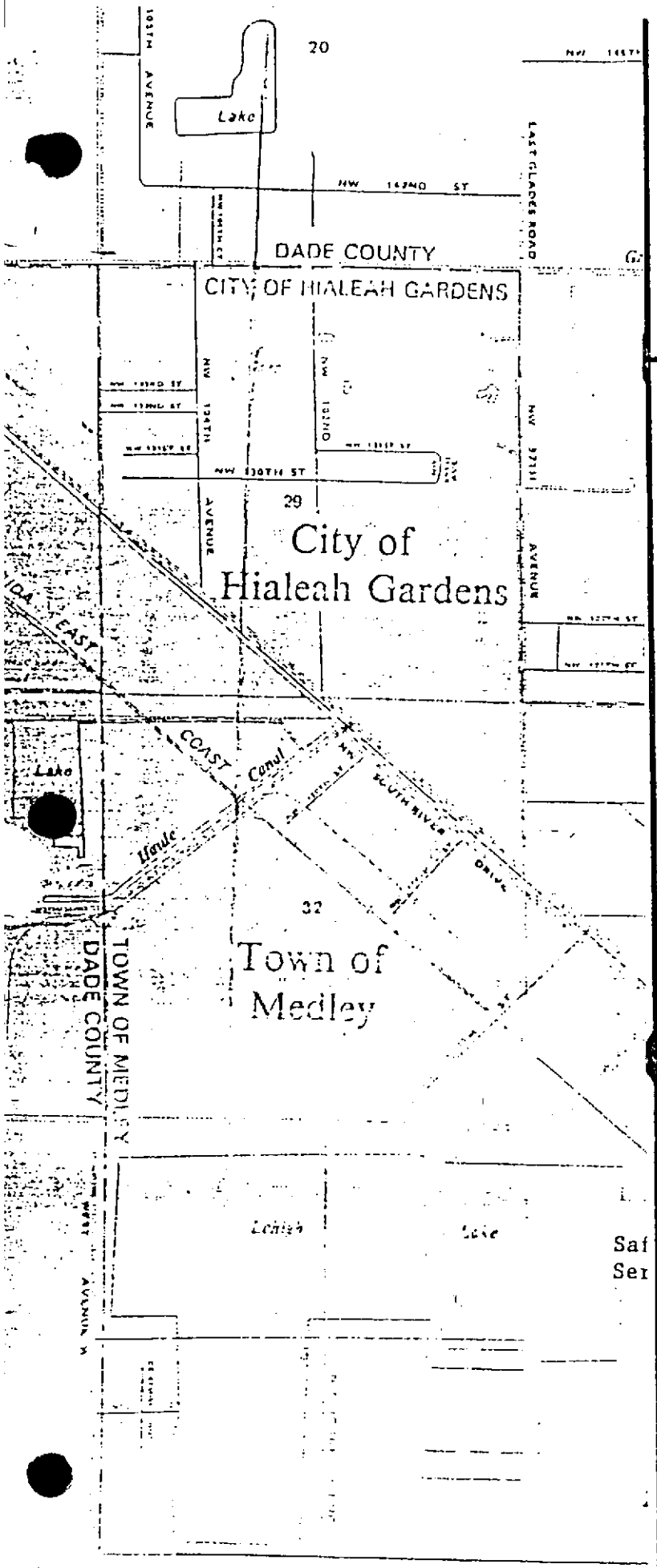

designations to add streets and street names and to revise corporate limits

To determine if flood insurance is available, contact an insurance agent or call the National Flood Insurance Program at (800) 638-6620.

APPROXIMATE SCALE IN FEET

2000 0 2000

NATIONAL FLOOD INSURANCE PROGRAM

FIRM
FLOOD INSURANCE RATE MAP

DADE COUNTY,
FLORIDA
AND INCORPORATED AREAS

PANEL 75 OF 575
(SEE MAP INDEX FOR PANELS NOT PRINTED)

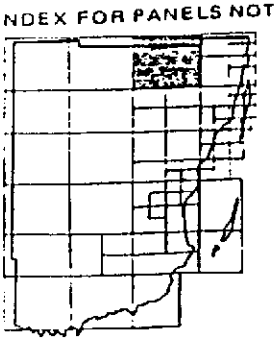

PANEL LOCATION

COMMUNITY-PANEL NUMBER
125098 0075 F

MAP REVISED:
NOVEMBER 4, 1987

FIGURE I.B.4-2

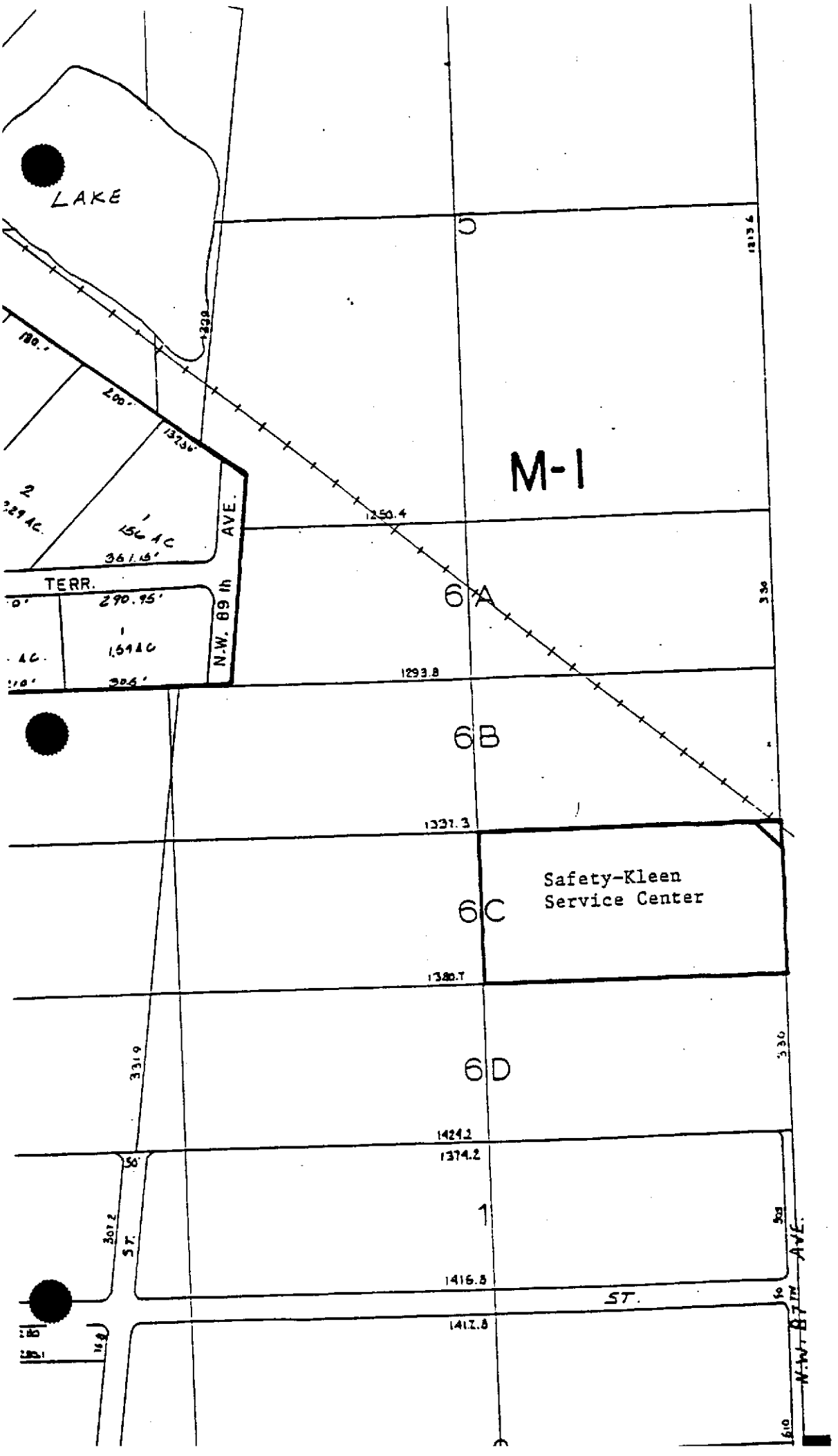

ZONING MAP

MEDLEY

M-1	LIGHT MANUFACTURIN INDUSTRIAL DISTRICT
M-3	HEAVY MANUFACTURIN INDUSTRIAL DISTRICT
R-1	SINGLE FAMILY RESIDENTIAL DISTRICT
R-3	MULTIPLE FAMIL RESIDENTIAL DI.

FIGURE I.B.4-3

6. Legal boundaries of the facility:
   Figure I.B.4-4 shows the property boundaries.

7. Injection wells:
   No injection wells are used by the facility.

8. Drinking water wells listed in public records or otherwise known to the applicant within one-quarter mile of the facility property boundary:
   According to information obtained from the Southeast Florida Water Management District, information regarding water wells in this area have not been computerized (as in other Water Management Districts). Information obtained from a site inspection indicates, that to the best of Safety-Kleen's knowledge, there are no known wells within a one-quarter mile radius of the facility.

9. Intake and discharge structures within one mile:
   There are no known intake or discharge structures within one mile.

10. Run-off control system:
    This facility will be connected to the city water sewer system. The entire industrial park is currently under construction and plans showing how the sewer system will be developed are not finalized. A surface water management plan certified by the design engineer is included as Sub-Attachment I.B.4-1.

Figure I.B.4-4
Legal Boundary of the Facility
Safety-Kleen Corp. Facility
Medley, Florida

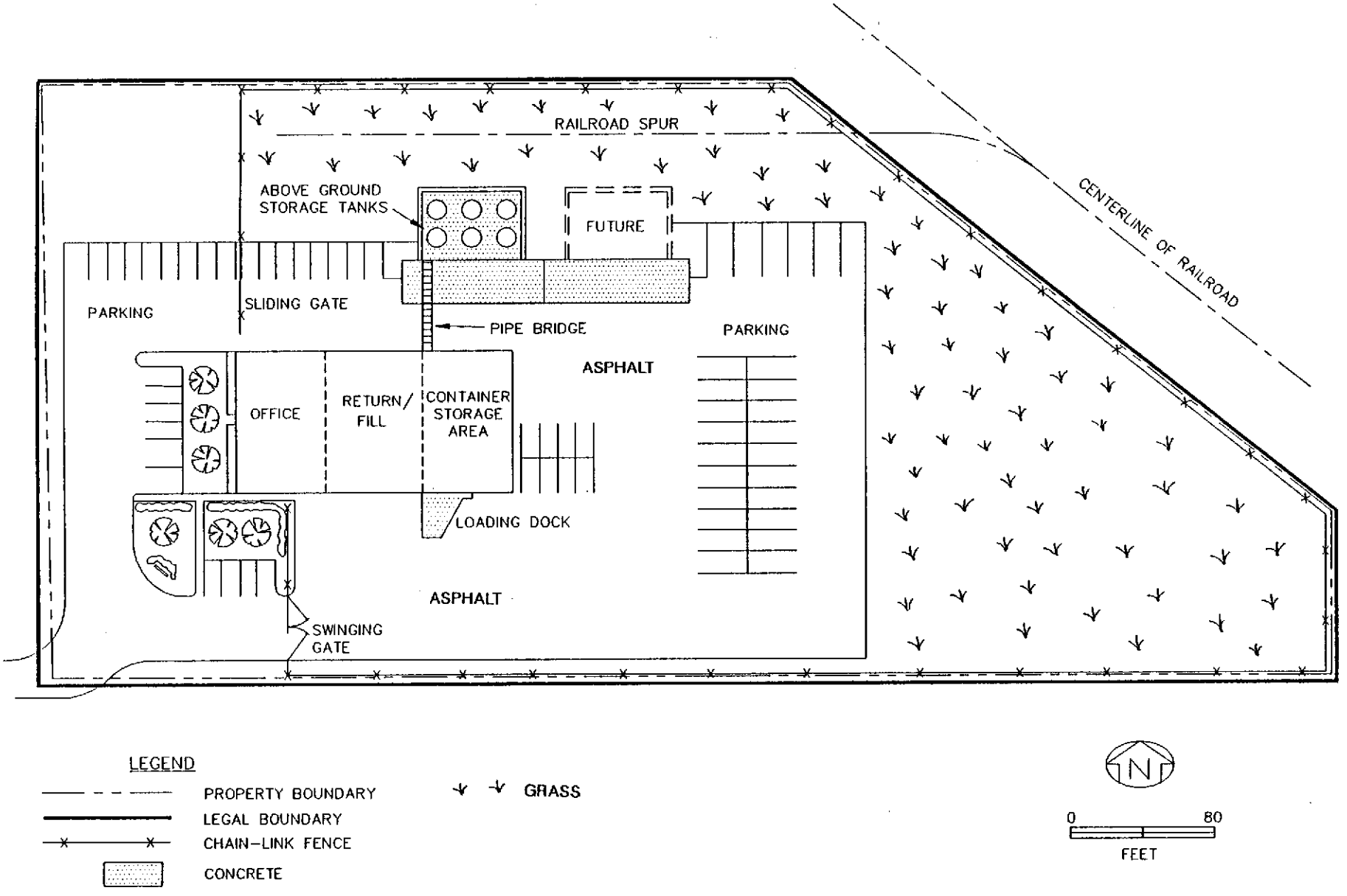

The ERM Group

SUB-ATTACHMENT I.B.4-1

SURFACE WATER MANAGEMENT PLAN

ATTACHMENT I.D.2

DESCRIPTION OF FACILITY OPERATION

ATTACHMENT I.D.2
DESCRIPTION OF FACILITY OPERATION

DESCRIPTION OF THE BUSINESS

Safety-Kleen Corp. of Elgin, Illinois is an international, service-oriented company whose customers are primarily engaged in automotive repair and industrial maintenance. Since 1968, Safety-Kleen has been offering a leasing service for hydrocarbon and chlorinated solvents and small parts washing equipment. A unique feature of this business concept is that the solvent is produced through recycling the used solvent that is leased to the customers. Approximately two-thirds of the clean solvent leased has been previously used by the customers.

The Safety-Kleen parts washing equipment, together with the solvents, are leased to customers; the leasing charge includes regularly scheduled solvent changes and machine maintenance. The business is conducted from local service centers (sales branches) located in 45 states domestically that warehouse the products and equipment required to service the customers in their sales areas. On a regular basis, service representatives furnish clean solvent to the customers, pick up the used solvent, and ensure that the leased equipment is in good working order. In 1979, Safety-Kleen expanded their scope of operations to make their solvent leasing service available to owners of parts cleaning equipment, regardless of manufacturer, using Safety-Kleen's solvents.

Basically, Safety-Kleen handles three types of parts washer solvents: a mineral spirits solvent, and old and new formulations of immersion cleaner. The old formulation immersion cleaner solvent is labeled under the trade name of Immersion Cleaner and Carburetor and Cold Parts Cleaner #609. It is a two-phase system consisting of an upper aqueous (water) layer and lower non-aqueous (solvent) layer. The water phase consists of water and Dresinate TX (sodium soap of tall oil). The solvent phase is composed of methylene chloride, orthodichlorobenzene, cresylic acid, and an amines additive. A new formulation immersion cleaner is being marketed under the name #699 and will

eventually replace the old immersion cleaner. The new solvent is composed of heavy aromatic naphtha, N-methyl-2-pyrolidone dipropylene glycol methyl ether, monoethanolamine and oleic acid. It contains a maximum of one percent total chlorinated solvents.

The solvents are distributed and collected by Safety-Kleen service representatives. Containers are transported in specially-equipped, enclosed route trucks. Clean mineral spirits (MS) are distributed from and used MS returned to the service center where the MS are stored in separate aboveground tanks for the clean and used mineral spirits. Warehouse space is dedicated for the storage of both clean and used immersion cleaner containers. Safety-Kleen leases parts washing equipment, including partially filled containers, which double as the solvent reservoir of the parts washer. During servicing, the quantity of used solvent removed from each machine ranges from 5 to 20 gallons.

Periodically, a company truck is dispatched from one of Safety-Kleen's nationwide solvent recycle facilities to the service center to deliver a load of clean solvent and pick up a load of used solvent. Mineral spirits are transported in bulk tank trucks between the service centers and the recycle facilities. The immersion cleaner remains in the covered containers during transfer between the service centers and the recycle facilities. Approximately 97 percent of the solvent handled in the parts washer business is mineral spirits, while the remainder is immersion cleaner.

Safety-Kleen's solvent cycle is essentially a closed loop, moving from the service center to the customer, from the customer to the service center, from the service center to the recycle facility and then from the recycle center back to the service center. The small quantities of residue remaining in the storage tanks at the service centers and after distillation of the used solvent at Safety-Kleen's solvent recycling facilities are disposed of in accordance with applicable laws and regulations.

This closed loop supplies Safety-Kleen with most of its solvent requirements; the resultant stabilized cost benefits are passed on to its customers. Ownership of the solvent remains with Safety-Kleen; the service center managers are accountable for the quantities of clean and used solvents handled by their branch operations. The service center is basically a temporary storage and transfer facility. By FDER definition, however, these centers are considered to be the waste generator.

Safety-Kleen also provides a dry cleaning waste reclamation service where containers of dry cleaning wastes (chlorinated) are collected and stored temporarily at the service centers before shipment to the recycle centers for reclamation and residue disposal.

In addition, Safety-Kleen provides a paint waste reclamation service. Wastes containing various thinners and paints are collected in containers and are stored at the service centers. These wastes are periodically shipped to a reclaimer, and the regenerated solvent is distributed to Safety-Kleen customers for use as a product.

Fluid Recovery Services (FRS) is a program managed by the Safety-Kleen Service Centers. Under this program, waste types similar to the FRS wastes provided by Safety-Kleen are collected by the service center and processed by the recycle centers. It should be noted, although the FRS wastes will be permitted wastes, the service center will manage the wastes as transfer wastes. The manifest will not be terminated at the service center. These wastes may or may not have originally been obtained from Safety-Kleen by the industrial customer. Examples of the types of waste that may be received from FRS customers include:

1. Spent hydrocarbon distillates, such as waste fuel, oil, petroleum, naphtha, etc.

2. Lubricating, hydraulic oils, and machine oils.

3. Industrial halogenated solvents such as 1,1,1-trichloroethane, tetrachloroethylene, freon, and trichloroethane.

4. Paint and lacquer thinners and paint wastes.

5. Other hazardous and non-hazardous halogenated and non-halogenated solvents.

In 1990, Safety-Kleen began offering a service for the collection of spent antifreeze (ethylene glycol) from automobile service stations. These wastes are deposited into a carboy or containers by the customer, which are located on the customer's premises. The contents of carboy are pumped into a tanker truck or into containers by a Safety-Kleen sales representative. At the service center, it is then pumped into a 20,000-gallon storage tank (if handled in bulk) or placed in the container storage warehouse (if handled in containers) for shipment to a Safety-Kleen recycle center.

ATTACHMENT I.D.3

ESTIMATED ANNUAL QUANTITIES OF HAZARDOUS WASTE AND STORAGE METHODS

TABLE I.D.3-1
SAFETY-KLEEN CORP.
MEDLEY, FLORIDA
PART 1 ATTACHMENT

Waste Type	Process Code(s)	Estimated Annual Amounts (Tons)	Waste Codes
Spent Mineral Spirits	S01* S02**	813	D001 and D-Codes Listed in Note Below
Dumpster Sediment	S01*	Included Above	D001 and D-Codes Listed in Note Below
Tank Bottoms	S01*	Included Above	D001 and D-Codes Listed in Note Below
Spent Ethylene Glycol	S01* S02***	5,000	D-Codes Listed in Note Below
Spent Immersion Cleaner (Old Formula)	S01*	28	F002, F004, and D-Codes Listed in Note Below
(New Formula)	S01*	Included Above	D-Codes Listed in Note Below
Dry Cleaning Waste	S01*	271	D001 or F002 and D-Codes Listed in Note Below
Paint Waste	S01*	69	D001, F003, F005 and D-Codes Listed in Note Below
Fluid Recovery Service (FRS Waste)	S01****	250	D001, D002, and D-Codes, F-Codes, K-Codes, and U-Codes Listed in Note Below

NOTES:

D-Codes: D004, D005, D006, D007, D008, D009, D010, D011, D018, D019, D021, D022, D023, D024, D025, D026, D027, D028, D029, D030, D032, D033, D034, D035, D036, D037, D038, D039, D040, D041, D042, D043

F-Codes: F001, F002, F003, F004, F005, F006, F019, F024, F039

TABLE I.D.3-1 (Continued)

K-Codes: K006, K016, K019, K022, K029, K030, K031, K048, K049, K050, K051, K052, K085, K086, K095, K096, K009, K010, K011, K013, K014, K015, K002, K003, K004, K005

U-Codes: U001, U002, U003, U009, U031, U037, U043, U044, U051, U052, U055, U056, U057, U068, U069, U070, U071, U072, U075, U077, U078, U079, U080, U083, U084, U107, U108, U110, U112, U113, U117, U118, U121, U125, U140, U154, U159, U161, U162, U165, U169, U171, U188, U191, U196, U210, U211, U213, U220, U226, U227, U228, U239, U359

* These wastes will be stored in containers in the container storage area. The maximum drum capacity in the container storage area for hazardous waste and product is 29,400 gallons with 6,912 gallons being waste.

** The mineral spirits storage tank has a maximum storage capacity of 20,000 gallons.

*** The ethylene glycol storage tank has a maximum storage capacity of 20,000 gallons.

****FRS wastes are transfer wastes only.

PART II A

GENERAL

ATTACHMENT II.A.1(a)

TOPOGRAPHIC MAP

ATTACHMENT II.A.1(a)
TOPOGRAPHIC MAP

FDER requires submission of a topographic map showing a distance of 1,000 feet around the waste management area and having a scale of one inch equals 200 feet. Contours must be on the map with intervals sufficient to clearly show the pattern of surface water flow in the vicinity of and from each operational unit of the facility. Because this is a small site, multiple maps were created to display required information in a legible format. Map figure numbers are referenced for the following FDER requirements:

1. Map scale and date:
   All maps have a scale and dated indicated.

2. 100-year floodplain area:
   Based on information available from the Federal Emergency Management Agency (Figure II.A.1(a)-1), the facility does not lie within the 100-year flood plain. The site is located in a Zone AH(EL6). AH areas are areas of 100-year shallow flooding where depths are between one and three feet. Base flood elevations are shown, but no flood hazard factors are determined. This site does not require any special flood management procedures.

3. Orientation of the map:
   All maps show orientation.

4. Access control (fences, gates, etc.):
   Figure II.A.1(a)-2 shows access control features.

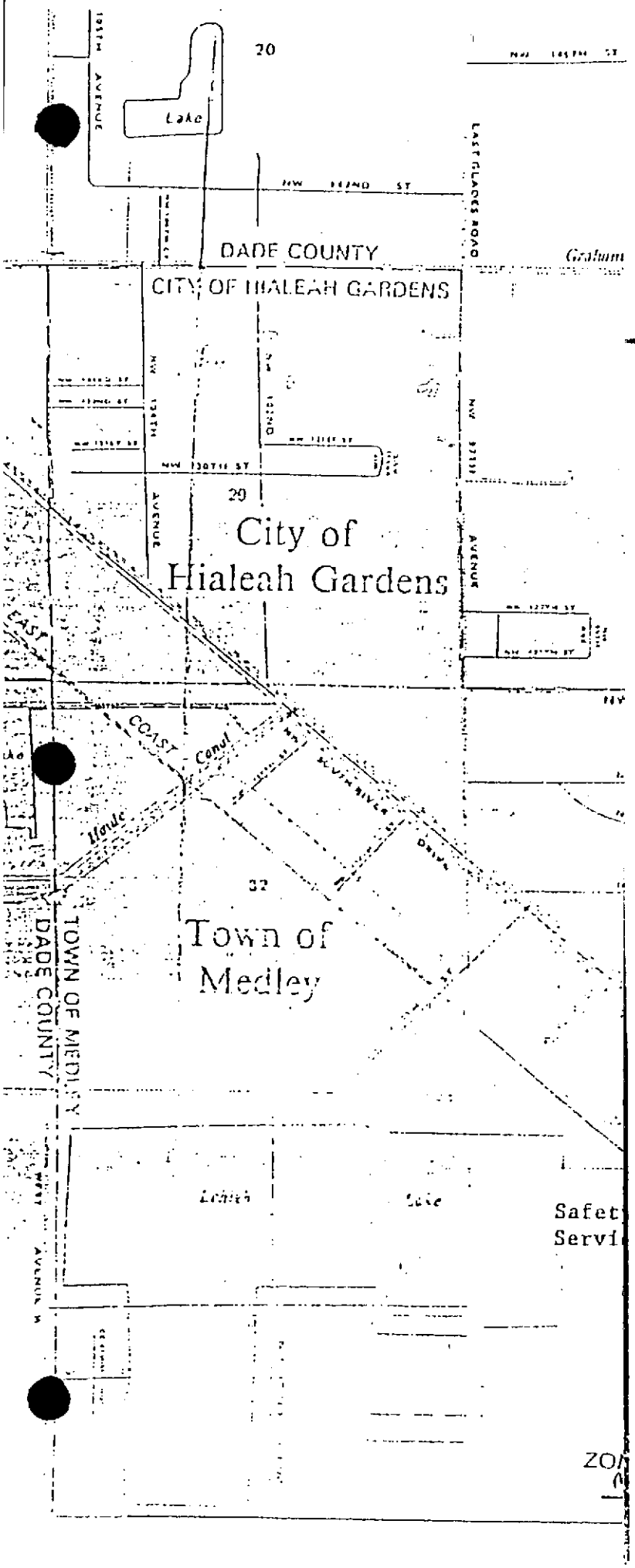

designations, local streets and street names, and flood elevations.

To determine if flood insurance is available, contact an insurance agent or call the National Flood Insurance Program at (800) 638-6620.

APPROXIMATE SCALE IN FEET

2000 0 2000

NATIONAL FLOOD INSURANCE PROGRAM

FIRM
FLOOD INSURANCE RATE MAP

DADE COUNTY,
FLORIDA
AND INCORPORATED AREAS

PANEL 75 OF 575
(SEE MAP INDEX FOR PANELS NOT PRINTED)

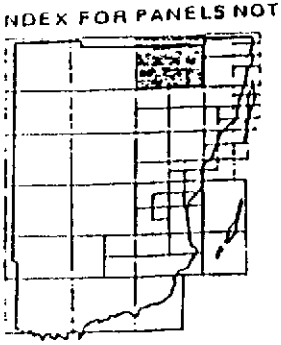

PANEL LOCATION

COMMUNITY-PANEL NUMBER
125098 0075 F

MAP REVISED:
NOVEMBER 4, 1987

FIGURE II.A.1(a)-1

Figure I.A.(a)-2
Loading/Unloading Locations
Safety-Kleen Corp. Facility
Medley, Florida

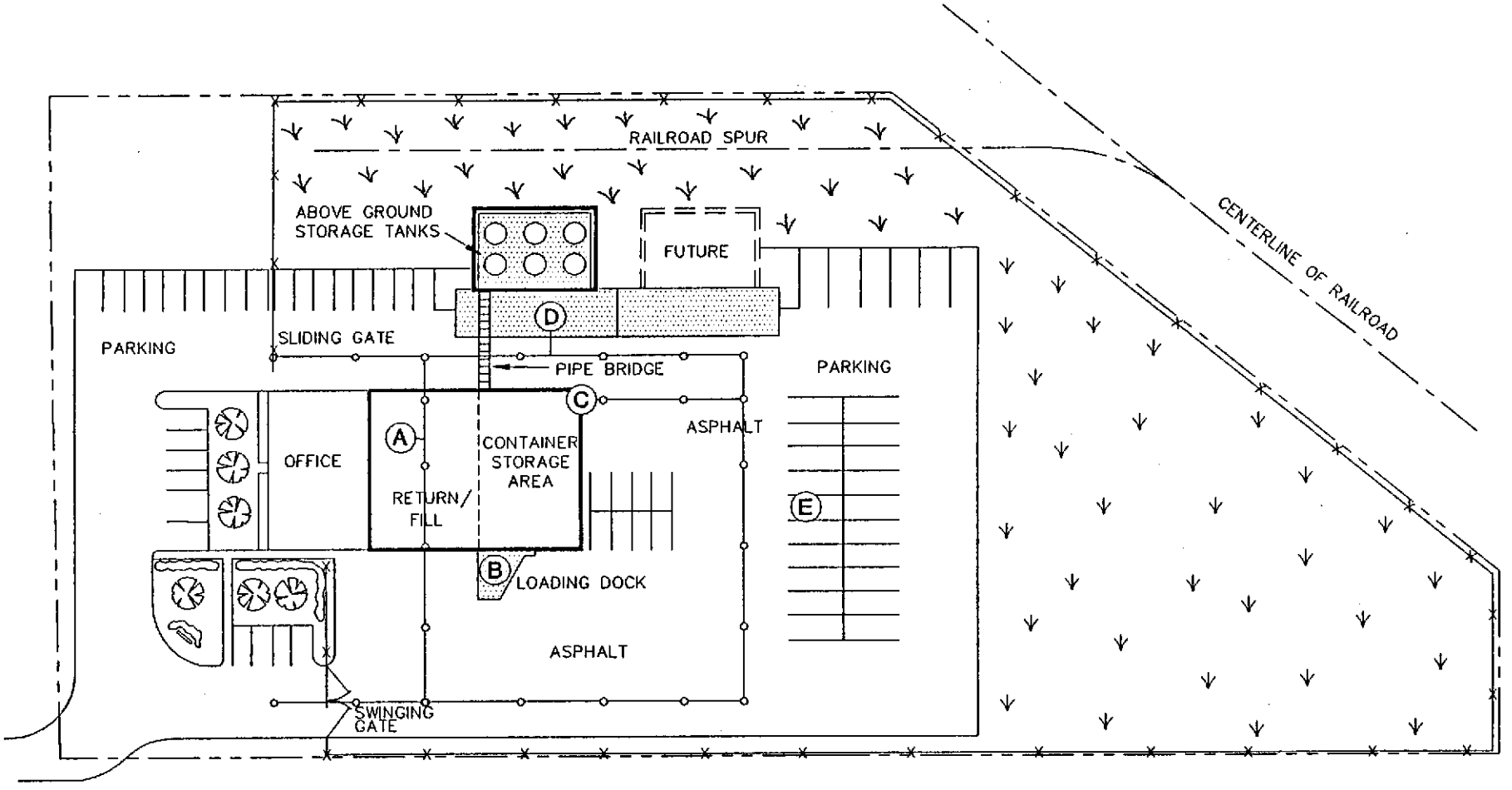

LEGEND

HAZARDOUS WASTE MANAGEMENT AREAS

ENTRANCE/EXIT ROUTE

(A) MINERAL SPIRIT DRUM DUMP/BARREL WASH/REFILL

(B) LOADING & UNLOADING OF DRUMS CONTAINING SOLVENTS FROM TRUCKS

(C) LOADING & UNLOADING OF CONTAINERIZED WASTE FROM LOCAL AREA VANS & TRUCKS

(D) LOADING & UNLOADING OF MINERAL SPIRITS AND ETHYLENE GLYCOL

(E) TRUCK TO TRUCK TRANSFER OF FRS WASTES
NOTE: THIS OCCURS ON ANY ASPHALT SURFACE EAST OR SOUTH OF THE WAREHOUSE

N

0 80
FEET

The ERM Group

13112.21/31121LUL/013192-4

II.A.1(a)-1B

5. Injection and withdrawal wells both onsite and offsite:

   There are no injection or withdrawal wells onsite. According to information obtained from the Southeast Florida Water Management District, information regarding water wells in this area have not been computerized (as other Water Management Districts). Information obtained from a site inspection indicate, that to the best of Safety-Kleen's knowledge, there are no known wells within a one-quarter mile radius of the facility.

6. Buildings and other structures:

   Buildings and other structures are shown in Figure II.A.1(a)-2.

7. Elevations and contours sufficient to show surface water flow:

   This facility will be connected to the city water sewer system. The entire industrial park is currently under construction and plans showing how the sewer system will be developed are not finalized. Once these plans become available, they will be forwarded to your office upon receipt.

8. Loading and unloading areas:

   Figure II.A.1(a)-2 shows loading and unloading areas in relation to the waste management areas. Additional details regarding traffic patterns are in Attachment II.A.1(c).

9. Drainage or flood control barriers:

   The surface water management plan for the facility is presented in Sub-Attachment I.B.4-1.

10. Hazardous waste units:

    Figure II.A.1(a)-3 shows hazardous waste management areas. These are 1) a tank area, 2) a container storage area, and 3) return/fill shelters.

Figure II.A.1(a)-3
Locations of Hazardous Waste Management Areas
Safety-Kleen Corp. Facility
Medley, Florida

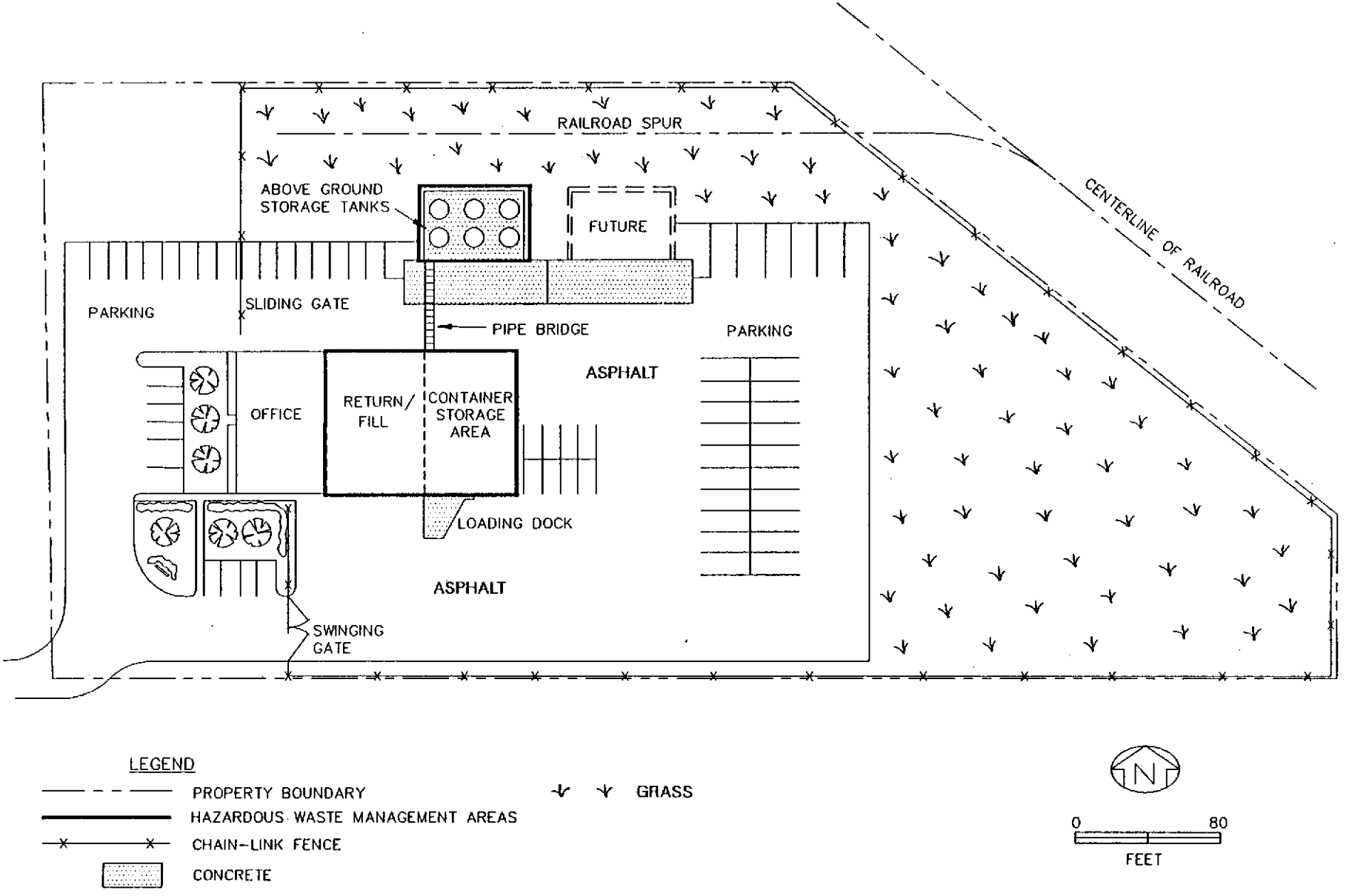

13112.21/31121LHW/012792-2

II.A.1(a)-2A

The ERM Group

11. Run-off control system:

    This facility will be connected to the city water sewer system. The entire industrial park is currently under construction and plans showing how the sewer system will be developed are not finalized. The surface water management plan is presented in Sub-Attachment I.B.4-1.

ATTACHMENT II.A.1(b)

WIND ROSE

FIGURE II.A.1(b)-1

MIAMI, FLORIDA

CEILING-VISIBILITY

WIND GRAPH

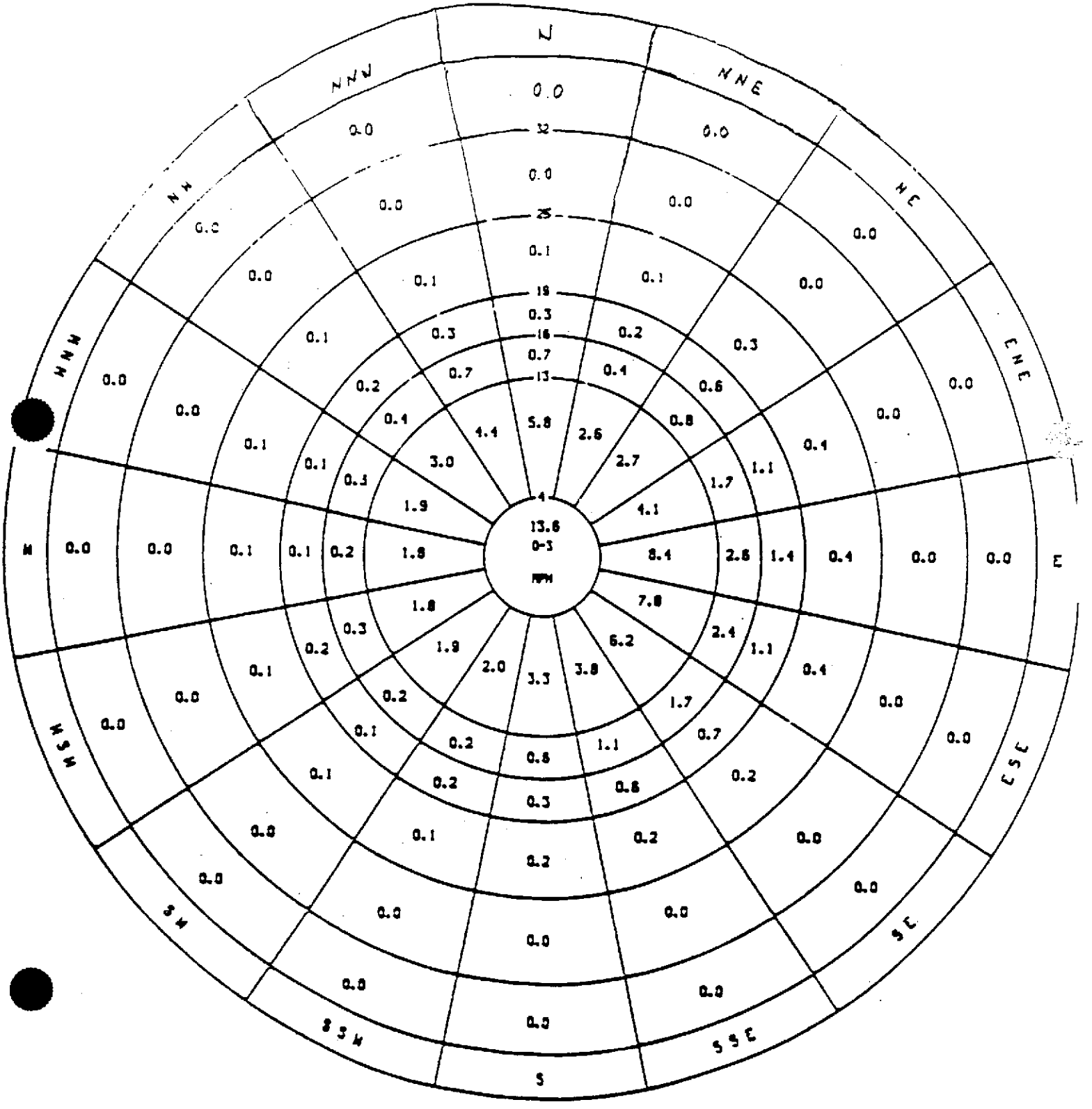

II.A.1(b)-1A

ATTACHMENT II.A.1(c)

TRAFFIC INFORMATION

ATTACHMENT II.A.1(c)
TRAFFIC INFORMATION

The service center (i.e., facility) layout and traffic patterns are illustrated in Figure II.A.1(c)-1.

The non-building areas of the facility will be paved with asphalt, concrete, or gravel as noted on the site plan (Figure II.A.1(c)-1). The stormwater retention areas will be vegetated with grass. The majority of the vehicular traffic and loading/unloading operations will occur at and near the return and fill (area A) and it will be paved with asphalt and concrete (Figure II.A.1(c)-1). Approximately once per week a tractor trailer will bring fresh drummed solvents and remove used, drummed solvents for transfer to a recycle facility. This truck will back up to the eastern side of the concrete-loading dock, located on the northern side of the facility in area B to load and unload drums. Area C will be used for the loading/unloading of transfer wastes and containerized permitted wastes from local area vans and trucks. Area E will be used for the truck-to-truck transfer of FRS wastes.

Route 286 is the major access road to the facility. The access road is designed in accordance with engineering criteria appropriate for sustaining the traffic volume and loading for the industrial activities in this area. The vans that will travel the routes daily between the service center and Safety-Kleen customers will use the two-lane road within the industrial park. The trucks dispatched from the recycle center to deliver and pick up fresh and used mineral spirits and ethylene glycol will perform these activities at the aboveground tank (area C) approximately once per week. Traffic from this facility is not expected to have a major effect on local traffic conditions.

Figure II.A.(c)-1
Loading/Unloading Locations
Safety-Kleen Corp. Facility
Medley, Florida

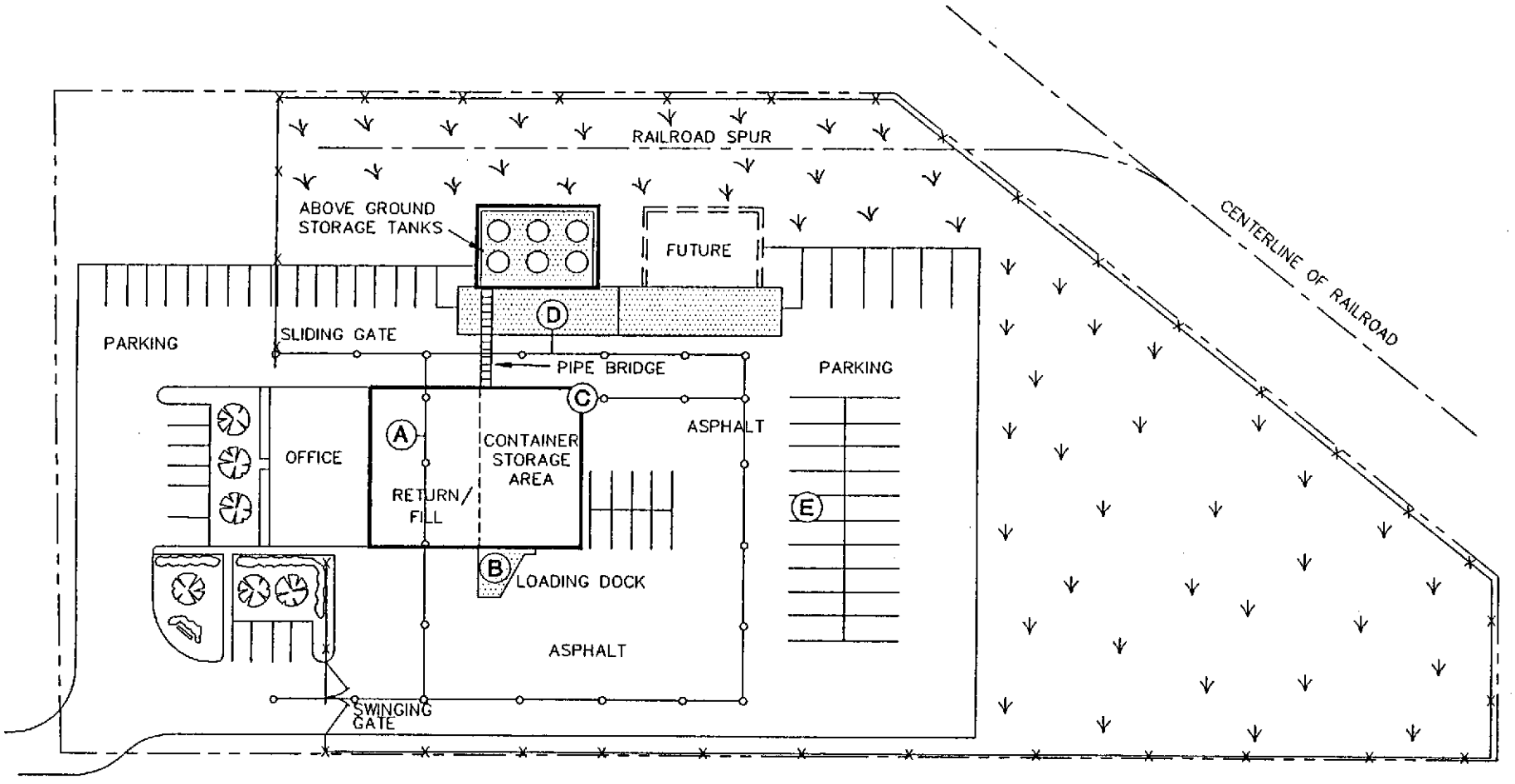

LEGEND

HAZARDOUS WASTE MANAGEMENT AREAS

ENTRANCE/EXIT ROUTE

(A) MINERAL SPIRIT DRUM DUMP/BARREL WASH/REFILL

(B) LOADING & UNLOADING OF DRUMS CONTAINING SOLVENTS FROM TRUCKS

(C) LOADING & UNLOADING OF CONTAINERIZED WASTE FROM LOCAL AREA VANS & TRUCKS

(D) LOADING & UNLOADING OF MINERAL SPIRITS AND ETHYLENE GLYCOL

(E) TRUCK TO TRUCK TRANSFER OF FRS WASTES
NOTE: THIS OCCURS ON ANY ASPHALT SURFACE EAST OR SOUTH OF THE WAREHOUSE

N

0 80
FEET

The ERM Group

13112.21/31121LUL/013192-4

II.A.1(c)-1A

ATTACHMENT II.A.2

FINANCIAL RESPONSIBILITY INFORMATION

ATTACHMENT II.A.2
FINANCIAL ASSURANCE FOR CLOSURE

Safety-Kleen Corp. will be the operator of the Medley, Florida Service Center. The cost for closure of the facility, as estimated herein, is assured through the use of the financial test specified in Subpart H of 40 CFR Part 264. The letter from the Chief Financial Officer of Safety-Kleen Corp. to demonstrate the financial responsibility for closure through the financial test is attached.

MEDLEY, FLORIDA SERVICE CENTER
CLOSURE COST ESTIMATE

1. TANK CLOSURE - Open, remove contents of, clean, remove, and dispose of two 20,000-gallon aboveground storage tanks

Phase I - Remove Contents and Clean

a. Ship contents to a reclaimer

Crew:

6 truck drivers @ $17.56/hr. x 8 hrs.	$ 842.88
6 trucks - $500.00 lump sum 2 20,000-gallon tanks = 40,000 gal. 40,000 ÷ 7,500 gal/truck = 6 trucks	$ 500.00
8 trucks x 80 miles x 1.75/mile	$ 1,120.00
Reclamation cost ($0.30/gal.)	$12,000.00

b. Squeegie clean tanks

Crew:

1 foreman @ $18.30/hr. x 24 hrs.	$ 439.20
2 laborers ($17.00/hr. & $3.00/hr. hazard pay) x 24 hrs.	$ 960.00
c. Use of high pressure water for 2 days	$ 800.00
d. Disposal and transportation of wash water (4,000 gal. @ $0.12/gal.)	$ 480.00
e. Transportation of wastewater (1,250 miles x $1.75/mile)	$ 2,187.50
f. Analysis of 2 rinsate samples	$ 400.00
TOTAL PHASE I	**$19,729.58**

Phase II - Remove and Dispose of Tanks

a. Disconnect and remove appurtenant equipment

Crew:

1 foreman @ $18.30/hr x 8 hrs.	$ 146.00
4 laborers @ $17.00/hr x 8 hrs.	$ 544.00

b. Torch tanks

Crew:

1 foreman @ $18.30/hr. x 8 hrs.	$ 146.40
2 laborers @ $17.00/hr. x 8 hrs.	$ 272.00

c. Remove tanks

Crew:

1 foreman	$18.30/hr. x 2 hrs.	$ 36.60
8 laborers	$16.80/hr. x 2 hrs.	$ 268.80
1 backhoe	$28.97/hr. x 4 hrs.	$ 115.88
1 oiler	$25.47/hr. x 4 hrs.	$ 101.88
1 truck driver	$17.56/hr. x 4 hrs.	$ 70.24
Equipment	$200.00 lump sum	$ 200.00
	TOTAL PHASE II	**$ 2,195.40**

Phase III - Backfilling, Regrading, Soil Testing

a. Tests for soil contamination (1 per tank)

2 samples x $640.00/each		$ 1,280.00

b. Regrading

Crew:

1 front-end loader	$27.38/hr x 2 hrs.	$ 54.76
Equipment	$2.00/c.y. x 20 c.y.	$ 40.00
	TOTAL PHASE III	**$ 1,375.00**

Summary of Closure Costs for 2 20,000-Gallon Tanks

Phase I		$19,730.00
Phase II		$ 2,195.00
Phase III		$ 1,375.00
	TOTAL	**$23,300.00**

2. CLOSURE OF DRUM STORAGE AREA - Remove and return drums to a reclaimer, clean the drum storage area, and dispose of wash water generated

a. 3 truck drivers @ $17.56/hr. x 8 hrs.	$ 421.44
3 trucks @ $750.00 lump sum	$ 750.00
Hauling cost - 180 miles x $1.75/mile	$ 312.00
b. Clean drum storage area	
Crew:	
1 foreman @ $18.30/hr. x 10 hrs.	$ 183.00
1 laborer ($17.00/hr. & $3.00/hr. hazard pay) x 10 hrs.	$ 183.00
c. Dispose of wash water - 700 gal. x $0.12/gal.	$ 84.00
d. Dispose of used solvents - 432 drums x $30.00/drum	$12,960.00
e. Testing for contamination - 2 samples x $640.00/each	$ 1,280.00
TOTAL DRUM CLOSURE COST	**$16,173.00**

3. CLOSURE OF DUMPSTER AND DOCK AREA - Remove, package, and dispose of sludge; clean the dumpster and dock area; remove dumpster and dock structure for reuse

a. 1 truck - $250.00 lump sum	$ 250.00
Hauling cost - 30 miles x $1.75/mile	$ 52.50
1 truck driver @ $17.56/hr. x 8 hrs.	$ 140.48
Crew:	
1 foreman @ $18.30/hr. x 4 hrs.	$ 73.20
1 laborer ($17.00/hr. & $3.00/hr. hazard pay) x 4 hrs.	$ 80.00
b. Clean dumpster and dock area	
Crew:	
1 foreman @ $18.30/hr. x 16 hrs.	$ 292.80
1 laborer ($17.00/hr. & $3.00/hr. hazard pay) x 16 hrs.	$ 320.00
Use of high pressure water for one day	$ 400.00
c. Disposal of wash water - 100 gal. x $0.12/gal.	$ 12.00
d. Dispose of dumpster mud - 16 55-gal. drums x $300/drum	$ 4,800.00
e. Testing for contamination - 3 samples x $320.00/each	$ 960.00
f. Torch, disassemble, and remove dumpster and dock	
Crew:	
1 foreman @ $18.30/hr. x 16 hrs.	$ 292.80
2 laborers @ $17.00/hr. x 16 hrs.	$ 578.00
Equipment @ $5.20/hr. x 8 hrs.	$ 41.60
1 truck driver @ $17.56/hr. x 2 hrs.	$ 35.12
TOTAL DOCK CLOSURE COSTS	**$ 8,329.00**

5. PROFESSIONAL ENGINEER CERTIFICATION $ 1,500.00

6. TOTAL CLOSURE COSTS

Two 20,000-Gallon Tanks	$23,300.00
Drum Storage Area	$16,173.00
Dock and Dumpster Area	$ 8,329.00
Professional Engineer Certification	$ 1,500.00
TOTAL	**$49,302.00**

NOTE: These estimates are based on third-party costs.

HAZARDOUS WASTE FACILITY CERTIFICATE OF LIABILITY INSURANCE

1. National Union Fire Insurance Company (the "Insurer") of Pittsburgh, PA hereby certifies that it has issued liability insurance covering bodily injury and property damage to Safety-Kleen Corp., (the "Insured"), of 777 Big Timber Road, Elgin, Illinois 60123 in connection with the Insured's obligation to demonstrate financial responsibility under 40 CFR 264.147 or 265.147, as adopted by reference in Section 17-30.18, Florida Administrative Code (FAC). The coverage applies at:

   (SEE ATTACHED LIST) (FLORIDA)

   for sudden and nonsudden accidental occurrences. The amounts of liability are $4 million per each occurrence with annual aggregate of $8 million, exclusive of legal defense costs. The coverage is provided under policy number RMGL2498750 issued on October 1, 1990. The effective date of said policy is October 1, 1990.

2. The Insurer further certifies the following with respect to the insurance described in Paragraph 1:

   (a) Bankruptcy or insolvency of the Insured shall not relieve the Insurer of its obligations under the policy.

   (b) The Insurer is liable for the payment of amounts within any deductible applicable to the policy, with a right of reimbursement by the Insured for any such payment made by the Insurer. This provision does not apply with respect to that amount of any deductible for which coverage is demonstrated as specified in 40 CFR 264.147(f) or 265.147(f) as adopted by reference in Section 17-30.18, FAC.

   (c) Whenever requested by the Secretary of the Florida Department of Environmental Regulation (FDER), the Insurer agrees to furnish to the Secretary a signed duplicate original of the policy and all endorsements.

   (d) Cancellation of the insurance, whether by the Insurer or the Insured, will be effective only upon written notice and only after the expiration of sixty (60) days after a copy of such written notice is received by the Secretary of the FDER.

   (e) Any other termination of the insurance (e.g., expiration, non-renewal) will be effective only upon written notice and only after the expiration of thirty (30) days after a copy of such written notice is received by the Secretary of the FDER.

I hereby certify that the wording of this instrument is identical to the wording specified in 40 CFR 264.151(j), as adopted by reference in Section 17-30.18, FAC, as such regulation was constituted on the date first above written, and that the Insurer is licensed to transact the business of insurance, or eligible to provide insurance as an excess or surplus lines Insurer, in one or more states including Florida.

Bernard M. Dunne

Bernard M. Dunne, Manager
Authorized Representative
National Union Fire Insurance Company
500 West Madison
Chicago, IL 60606

Date Printed: 10/16/90

STATE OF FLORIDA

EPA/DER I.D. NO.	NAME	ADDRESS
FLD 097837983	Safety-Kleen Corp.	505 Plumosa Dr. Altamonte Springs, FL 32701
FLD 984167791	Safety-Kleen Corp.	Lot 46B Quantum Industrial Park Boynton Beach, FL
FLD 980847214	Safety-Kleen Corp.	161 Industrial Loop South Orange Park, FL 32073
FLD 980840086	Safety-Kleen Corp.	7875 NW 54th Street Miami, FL 33166
FLD 984171694	Safety-Kleen Corp.	E. of NW 89th Ave. & NW 96th St. Medley, FL
FLD 000776716	Safety-Kleen Corp.	19200 Peachland Blvd. Port Charlotte, FL 33949
FLD 000776773	Safety-Kleen Corp.	3082 W. Tharpe St. (Rear) Tallahassee, FL 32303
FLD 982133159	Safety-Kleen Corp.	Entrepot Blvd. Airport Ind. Park Tallahassee, FL 32303
FLD 980847271	Safety-Kleen Corp.	5809 24th Avenue South Tampa, FL 33619

ARTHUR ANDERSEN & CO.
CHICAGO, ILLINOIS

REPORT OF INDEPENDENT PUBLIC ACCOUNTANTS

To Safety-Kleen Corp.:

We have audited, in accordance with generally accepted auditing standards, the consolidated financial statements of SAFETY-KLEEN CORP. (a Wisconsin corporation) AND SUBSIDIARIES (the "Company") for the fiscal years ended December 29, 1990, and December 30, 1989, and have issued our report thereon dated February 8, 1991. We have not performed any auditing procedures since that date.

At your request, we have read the letter dated March 20, 1991, from your chief financial officer to the Environmental Protection Agency ("EPA") and compared the data therein that are specified as having been derived from the audited consolidated financial statements for the year ended December 29, 1990, referred to above, with the corresponding amounts in those financial statements. In connection with this procedure, no matters came to our attention that caused us to believe that the specified data should be adjusted.

This report is furnished solely for the use of the Company and the EPA and should not be used for any other purpose.

Arthur Andersen & Co.

Chicago, Illinois,
March 27, 1991.

ARTHUR ANDERSEN & CO.

CHICAGO, ILLINOIS

REPORT OF INDEPENDENT PUBLIC ACCOUNTANTS

To the Board of Directors
and Shareholders of
Safety-Kleen Corp.:

We have audited the accompanying consolidated balance sheets of SAFETY-KLEEN CORP. (a Wisconsin corporation) AND SUBSIDIARIES as of December 29, 1990, and December 30, 1989, and the related consolidated statements of earnings, shareholders' equity and cash flows for each of the three fiscal years in the period ended December 29, 1990. These financial statements are the responsibility of the Company's management. Our responsibility is to express an opinion on these financial statements based on our audits.

We conducted our audits in accordance with generally accepted auditing standards. Those standards require that we plan and perform the audit to obtain reasonable assurance about whether the financial statements are free of material misstatement. An audit includes examining, on a test basis, evidence supporting the amounts and disclosures in the financial statements. An audit also includes assessing the accounting principles used and significant estimates made by management, as well as evaluating the overall financial statement presentation. We believe that our audits provide a reasonable basis for our opinion.

In our opinion, the financial statements referred to above present fairly, in all material respects, the financial position of Safety-Kleen Corp. and Subsidiaries as of December 29, 1990, and December 30, 1989, and the results of their operations and their cash flows for each of the three fiscal years in the period ended December 29, 1990, in conformity with generally accepted accounting principles.

Arthur Andersen & Co.

Chicago, Illinois,
February 8, 1991.

STATE OF FLORIDA

HAZARDOUS WASTE FACILITY LETTER FROM CHIEF FINANCIAL OFFICER TO DEMONSTRATE CLOSURE AND/OR POST-CLOSURE FINANCIAL ASSURANCE

_____, Secretary
Florida Department of Environmental Regulation
Twin Towers Office Building
2600 Blair Stone Road
Tallahassee, Florida 32399-2400

I am the chief financial officer of Safety-Kleen Corp. located at
[Name and Address of Firm]
777 Big Timber Rd., Elgin, IL 60123.
This letter is in support of this firm's use of the financial test to demonstrate financial assurance, as specified in Subpart H of 40 CFR Parts 264 and 265, as adopted by reference in Section 17-30.180, Florida Administrative Code (F.A.C.).

(Fill out the following five paragraphs regarding facilities and associated cost estimates. If your firm has no facilities that belong in a particular paragraph, write "NONE" in the space indicated. For each facility, include its EPA/DER Identification Number, name, address, and current closure and/or post-closure cost estimates. Identify each cost estimate as to whether it is for closure or post-closure care.)

1. This firm is the owner or operator of the following facilities in the State of Florida for which financial assurance for closure or post-closure care is demonstrated through the financial test specified in Subpart H of 40 CFR Parts 264 and 265, as adopted by reference in Section 17-30.180, F.A.C. The current closure and/or post-closure cost estimates covered by the test are shown for each facility:

total per attached listing: closure,$1,035,585; post-closure $1,513,615

2. This firm guarantees, through the corporate guarantee specified in Subpart H of 40 CFR Parts 264 and 265, as adopted by reference in Section 17-30.180, F.A.C., the closure or post-closure care of the following facilities in the State of Florida owned or operated by subsidiaries of this firm. The current cost estimates for the closure or post-closure care so guaranteed are shown for each facility:

none

3. In States other than Florida where EPA is administering the financial requirements of Subpart H of 40 CFR Parts 264 and 265, this firm, as owner or operator or guarantor is demonstrating financial assurance for the closure or post-closure care of the following facilities through the use of a test equivalent or substantially equivalent to the financial test specified in Subpart H of 40 CFR Parts 264 and 265. The current closure and/or post-closure cost estimates covered by such test are shown for each facility:

Total per attached listing: closure, $2,412,017; post-closure, $555,819

4. In States other than Florida where EPA is not administering the financial requirements of Subpart H of 40 CFR Parts 264 and 265, this firm, as owner or operator or guarantor, is demonstrating financial assurance for the closure or post-closure care of the following facilities through the use of a test equivalent or substantially equivalent to the financial test specified in Subpart H of 40 CFR Parts 264 and 265. The current closure and/or post-closure cost estimates covered by such a test are shown for each facility:

   Total per attached listing: closure, $15,657,338; post-closure $4,048,501

5. This firm is the owner or operator of the following hazardous waste management facilities for which financial assurance for closure or, if a disposal facility, post-closure care, is <u>not</u> demonstrated either to EPA or a State through the financial test or any other financial assurance mechanism specified in Subpart H of 40 CFR Parts 264 and 265, or equivalent or substantially equivalent State mechanisms. The current closure and/or post-closure cost estimates not covered by such financial assurance are shown for each facility:

   none

6. This firm is the owner or operator of the following UIC facilities for which financial assurance for plugging and abandonment is required under 40 CFR Part 144 and/or Section 17-28.27(9), F.A.C. The current plugging and abandonment cost estimates as required by 40 CFR 144.62 and/or Section 17-28.27(9), F.A.C. are shown for each facility:

   none

This firm is required [insert "is required" or "is not required"] to file a Form 10K with the Securities and Exchange Commission (SEC) for the latest fiscal year.

The fiscal year of this firm ends on the Saturday closest to December 31. [Month, Day] The figures for the following items marked with an asterisk are derived from this firm's independently audited, year-end financial statements and footnotes for the latest completed fiscal year, ended December 29,1991. [Date]

[Fill in Alternative I if the criteria of paragraph (f)(1)(i) of §§264.143 or 264.145, or of paragraph (e)(1)(i) of §§265.143 or 265.145, as adopted by reference in Section 17-30.180, F.A.C., are used. Fill in Alternative II if the criteria of paragraph (f)(1)(ii) of §§264.143 or 264.145, or of paragraph (e)(1)(ii) of §§265.143 or 264.145, as adopted by reference in Section 17-30.180, F.A.C., are used.]

ALTERNATIVE I

N/A

1. Sum of current closure and post-closure cost estimates [total of all cost estimates shown in the five paragraphs above] $_____

*2. Total liabilities [if any portion of the closure or post-closure cost estimates is included in total liabilities, you may deduct the amount of that portion from this line and add that amount to lines 3 and 4] $_____

*3. Tangible net worth $_____

*4. Net worth $_____

*5. Current assets $_____

*6. Current liabilities $_____

*7. Net working capital [line 5 minus line 6] $_____

*8. The sum of net income plus depreciation, depletion, and amortization $_____

*9. Total assets in U.S. (required only if less than 90 percent of firm's assets are located in the U.S.) $_____

	YES	NO
10. Is line 3 at least $10 million?	____	____
11. Is line 3 at least 6 times line 1?	____	____
12. Is line 7 at least 6 times line 1?	____	____
13. Are at least 90 percent of firm's assets located in the U.S.? If not, complete line 14.	____	____
14. Is line 9 at least 6 times line 1?	____	____
15. Is line 2 divided by line 4 less than 2.0?	____	____
16. Is line 8 divided by line 2 greater than 0.1?	____	____
17. Is line 5 divided by line 6 greater than 1.5?	____	____

ALTERNATIVE II

1.	Sum of current closure and post-closure cost estimates [total of all cost estimates shown in the five paragraphs above]	$ 25,222,875
2.	Current bond rating of most recent issuance of this firm and name of rating service	A - Standard & Poors
3.	Date of issuance of bond	September 15, 1989
4.	Date of maturity of bond	September 15, 1999
*5.	Tangible net worth [if any portion of the closure and post-closure cost estimates is included in "total liabilities" on your firm's financial statements, you may add the amount of that portion to this line]	$ 375,766,000
*6.	Total assets in U.S. (required only if less than 90 percent of firm's assets are located in the U.S.)	$ 594,116,000

		YES	NO
7.	Is line 5 at least $10 million?	X	
8.	Is line 5 at least 6 times line 1?	X	
*9.	Are at least 90 percent of firm's assets located in the U.S.? If not, complete line 10.		N
10.	Is line 6 at least 6 times line 1?	X	

I hereby certify that the wording of this letter is substantially identical to the wording specified in 40 CFR 264.151(f), as adopted by reference in Section 17-30.180, FAC, as such regulations were constituted on the date shown immediately below.

Robert W. Willmschen
[Signature]

Robert W. Willmschen
[Type Name]

Vice President - Finance
[Type Title]

March 20,1991
[Date]

PARAGRAPH #1

STATE OF FLORIDA

Casselberry ($52,050)	(0)	(3-130-01)	464 A Pulmosa Drive Casselberry, FL 32707	FLD 097837983
Sanford ($52,050)	(0)	(3-130-01)	North Star Business Park, Lot 10 Sanford, FL 32771	FLD 984171165
Delray Beach ($207,159)	(733,905)	(3-097-01)	16086 SW 4th Ave., Bldg. B Delray Beach, FL 33444	FLD 000776757
Boynton Beach ($52,050)	(0)	(3-097-01)	Lot 46B Boynton Beach Park of Commerce Boynton Beach, FL	Applied For
Orange Park ($52,050)	(0)	(3-079-01)	161 Industrual Loop South Orange Park, FL 32073	FLD 980847214
Miami ($52,050)	(0)	(3-097-02)	7875 NW 54th Street Miami, FL 33166	FLD 980840086
Medley ($52,050)	(0)	(3-097-02)	Palmetto Dr. & NW South River Dr. Medley, FL	Applied For
Port Charlotte ($52,050)	(0)	(3-163-02)	19200 Peachland Blvd. Bachman Blvd. Port Charlotte, FL 33949	FLD 000776716
Tallahassee ($52,050)	(40,600)	(3-079-02)	3082 West Tharpe Street (Rear) Tallahassee, FL 32303	FLD 000776773
Tallahassee ($52,050)	(0)		Entrepot Blvd.-Airport Ind. Park Tallahassee, FL 32303	Applied For
Tampa ($234,225)	(739,110)	(3-163-01)	4701 North Manhattan Tampa, FL 33614	FLD 049557408
Tampa AC ($125,751)	(0)	(0-007-50)	5309 24th Avenue South Tampa, FL 33619	FLD 980847271
$ 1,035,585	$ 1,513,615			

Closure Post Closure

PARAGRAPH #2

None

PARAGRAPH #3 (See Transmittal Letter for Description)

STATE OF CALIFORNIA

El Monte ($52,050)	(0)	(7-088-06)	10625 Hickson Street Unit A El Monte, CA 91731	CAT 000613893

Fresno ($52,050)	(0)	(7-015-01)	3561 S. Maple Street Fresno, CA 93725	CAD 066113465
Gardena ($150,000)	(0)	(7-088-04)	139 E. 157th Street Gardena, CA 90248	CAT 000613919
Highland ($52,050)	(0)	(7-172-01)	7979 Palm Ave., Unit E Highland, CA 92346	CAT 000613927
Los Alamitos ($52,050)	(0)	(7-088-05)	3876 Florista Street Los Alamitos, CA 90270	CAD 066177783
Los Angeles ($52,050)	(0)	(7-088-02)	2918 Worthen Avenue Los Angeles, CA 90039	CAT 000613935
Oakland ($411,612)	(0)	(7-178-01)	404 Market Street Oakland, CA 94607	CAD 053044053
Reedley Recycle Center ($106,182)	(61,419)		1000 South I Street Reedley, CA 93654	CAD 093459485
Rohnert Park ($52,050)	(0)	(7-178-03)	5750 Commerce Blvd. Rohnert Park, CA 94928	CAT 000613943
Rancho Cordova ($52,050)	(0)	(7-157-01)	2576 Mercantile Drive Rancho Cordova, CA 95670	CAT 000613950
Salida ($52,050)	(0)	(7-185-01)	5050 Salida Blvd. Salida, CA 95368	CAT 000613968
San Diego ($52,050)	(0)	(7-175-01)	6306 Federal Blvd. San Diego, CA 92114	CAD 080916968
Santa Ana ($52,050)	(0)	(7-088-07)	2120 South Yale Street Santa Ana, CA 92704	CAT 000613976
Santa Barbara ($375,000)	(0)	(7-177-01)	214 E. Montecito Street Santa Barbara, CA 93103	CAT 000613984
Goleta ($52,050)	(0)	(7-177-01)	5310 Overpass Road Goleta, CA 93103	CAD 981374077
Santa Clara ($52,050)	($332,000)	(7-178-02)	3461 Woodward Ave. Santa Clara, CA 95054	CAD 077187888
San Jose ($52,050)	(0)	(7-178-02)	1147 N. 10th Street San Jose, CA 95112	CAD 980817159
Sylmar ($52,050)	(0)	(7-088-01)	13024 Bradley Avenue Sylmar, CA 91342	CAT 000613992

STATE OF CONNECTICUT

Branford ($52,050)	(0)	(2-112-01)	11 Tipping Drive Branford, CT 06405	CTD 980667927
West Hartford ($52,050)	(40,600)	(2-070-01)	24 Brixton Street West Hartford, CT 06110	CTD 000845982

Plainsfield ($104,100)	(0)		Community Avenue Plainsfield, CT 06374	CTD 001156009

STATE OF IDAHO

Boise ($52,050)	(40,600)	(1-183-08)	514 E. 45th Street Boise, ID 83704	IDD 000712026
Pocatello ($52,050)	(40,600)	(1-183-28)	2610 Garrettway Pocatello, ID 83201	IDD 991281270
Boise ($52,050)	(0)	(1-183-01)	Supply Way and Gowan Road Boise, ID 83705	IDD 981770498

STATE OF IOWA

Davenport ($52,050)	(0)	(5-047-01)	3035 West 73rd Street Davenport, IA 52806	IAD 098027592
Grimes ($52,050)	(40,600)	(5-053-21)	5318 NW 111 Drive, RR #2 Grimes, IA 50111	IAD 083489773
Des Moines ($52,050)	(0)	(5-053-01)	4705 NE 22nd Street Des Moines, IA 50317	IAD 981718000
Mason City ($120,023)	(0)	(5-093-01)	16 SW 11th Street Mason City, IA 50401	IAD 000678326
2,412,017	$555,819			
Closure	Post Closure			

PARAGRAPH #4 (See Transmittal Letter for Description)

STATE OF ALABAMA

Dolomite ($59,503)	(0)	(3-019-01)	1002 Hoke Avenue Dolomite, AL 35061	ALD 077640001
Gurley ($52,050)	(40,600)	(3-019-02)	201 Section Line Street Gurley, AL 35748	ALD 000776807
Huntsville ($142,237)	(0)	(0-007-49)	Colemont Ind. Site U.S. 72 East Huntsville, AL	ALD 981028798
Montgomery ($52,050)	(0)	(3-019-21)	4815 N. Birmingham Montgomery, AL 36308	ALT 020010997
Whistler ($52,050)	(0)	(6-133-01)	3023 Dials Street Whistler, AL 36612	ALD 071951628

STATE OF ARIZONA

Phoenix ($52,050)	(40,600)	(7-142-01)	4401 E. University Phoenix, AZ 85034	AZD 089308803

Tucson ($52,050)	(0)	(7-142-02)	4161 E. Tennessee Tucson, AZ 85714	AZD 980892897
Chandler ($52,050)	(0)	(7-142-01)	Lot 42, Beck Avenue Williams Field Rd. Ind. Park Chandler, AZ 05224	AZD 981969504

STATE OF ARKANSAS

Little Rock ($52,050)	(40,600)	(6-086-01)	11727 Arch St. Pike Little Rock, AR 72206	ARD 054575238
Fort Smith ($52,050)	(40,600)	(6-063-01)	2511 Johnson Street Fort Smith, AR 72904	ARD 000709733
West Memphis ($52,050)	(0)	(6-094-01)	309 Mound City Road Between I 55 and 40 West Memphis, AR 72301	ARD 056855232

STATE OF COLORADO

Commerce City ($52,050)	(0)	(6-052-01)	4980 Locust Street Commerce City, CO 80022	COD 000716613
Englewood AC ($171,765)	(0)	(6-052-02)	2801 S. Tejon Englewood, CO 80110	COD 000716621
Grand Junction ($52,050)	(0)	(6-052-21)	368 Bonny Grand Junction, CO 81501	COT 090010851
Pueblo ($52,050)	(0)	(6-052-04)	2841 East Fourth Street Pueblo, CO 81001	COD 000716639
Denver ($104,100)	(0)		1345 Bayoud Avenue Denver, CO 80223	COD 980954101

STATE OF GEORGIA

Columbus ($52,050)	(0)	(3-106-01)	5920 Coca Cola Blvd. Columbus, GA 31909	GAD 000823096
Garden City ($52,050)	(0)	(3-179-01)	5217 Augusta Road P.O. Box 7036 Garden City, GA 31408	GAD 000776781
Hapeville ($52,050)	(0)	(3-013-01)	3440 Lang Avenue Hapeville, GA 30354	GAD 000823070
Morrow ($52,050)	(0)	(3-013-01)	South Lake Com. PK- Commercial Dr. Morrow, GA 30260	GAD 981265424
Macon ($52,050)	(0)	(3-106-21)	6850 Hawkinsville Road Macon, GA 31207	GAD 980709257
Norcross ($170,000)	(0)	(3-013-02)	480 S. Old Peachtree Road Norcross, GA 30071	GAD 980842777

Ringgold ($52,050)	(0)	(3-019-22)	RR #5, Dietz Road Ringgold, GA 30736	GAD 980842835

STATE OF ILLINOIS

Arlington Heights ($52,050)	(0)	(5-034-03)	306 Campus Drive Arlington Heights, IL 60004	ILD 000805929
Elgin Recycle Center ($206,115)	(2,236,900)		1500 E. Villa Street Elgin, IL 60120	ILD 000805911
Caseyville ($165,000)	(0)	(5-160-02)	20 Tucker Drive Caseyville, IL 62232	ILD 981097819
Chicago Plant ($329,422)	(0)		1445 W. 42nd Street Chicago, IL 60609	ILD 005450697
Franklin Park ($52,050)	(0)	(5-034-04)	412 Domenic Court Franklin Park, IL 60131	ILD 000665869
Mokena ($52,050)	(0)	(5-034-05)	9631 West 194th Place Mokena, IL 60448	ILD 000665851
Pekin ($74,916)	(0)	(5-136-01)	RR #3 Pekin, IL 61554	ILD 093862811
Schaumburg ($52,050)	(0)	(5-034-01)	728 Morse Avenue Schaumburg, IL 60193	ILD 079749073
Urbana ($52,050)	(0)	(5-033-01)	500 Anthony Drive Urbana, IL 61801	ILD 981088388
Dolton ($460,000)	(0)	(0-006-54)	633 E. 138th St. P.O. Box 100 Dolton, IL 60419	ILD 980613913

STATE OF INDIANA

Evansville ($52,050)	(0)	(5-060-01)	4417 St. Joe Street Evansville, IN 47712	IND 000815894
Fort Wayne ($54,271)	(40,600)	(5-068-01)	2112 Production Road Ft. Wayne, IN 46808	IND 000715466
Indianapolis ($52,050)	(40,600)	(4-076-02)	8418-26 Brookville Road Indianapolis, IN 46239	IND 000815886
Portage ($52,050)	(40,600)	(5-034-06)	6050 Eagle Drive Portage, IN 46368	IND 000714428
South Bend ($52,050)	(40,600)	(5-082-01)	2217 Western Avenue South Bend, IN 46628	IND 000715474
Freslube USA ($298,585)	(0)		601 Riley Road E. Chicago, IN 46312	IND 077042034

STATE OF KANSAS

Kansas City ($58,289)	(0)	(5-085-01)	11565 K-32 Highway Kansas City, KS 66111	KSD 000687681
Dodge City ($52,050)	(0)	(6-195-21)	600 East Trail Dodge City, KS 67801	KSD 980686844
Wichita ($63,311)	(40,600)	(6-195-01)	1311 South Anna Wichita, KS 67209	KSD 000809723
Edwardsville ($52,050)	(40,600)	(5-085-01)	9317 Woodend Road Edwardsville, KS 66022	KSD 980973515
Bonner Springs ($ 0)	(428,137)	(5-085-01)	11565 K 32 Highway Bonner Springs, KS	KSD 000687681

STATE OF KENTUCKY

Ashland ($52,050)	(0)	(4-075-01)	1592 Wolohan Drive Ashland, KY 41101	KYD 000776724
Ashland ($52,050)	(0)	(4-075-01)	West Virginia & Kevin Aves. Ashland, KY 41105	KYD 981027451
Lexington ($52,050)	(0)	(4-090-01)	264 Big Run Road Lexington, KY 40503	KYD 020440459
Lexington ($52,050)	(0)	(4-090-01)	550 Blue Sky Parkway Lexington, KY 40509	KYD 981027469
Louisville ($52,050)	(0)	(4-091-01)	751 Grade Lane Louisville, KY 40213	KYD 091514653
New Castle ($311,586)	(0)	(0-006-54)	State Highway 146 New Castle, KY 40050	KYD 053348108

STATE OF LOUISIANA

Pineville ($52,050)	(0)	(6-073-04)	4200 Shreveport Highway Pineville, LA 71360	LAD 000757708
Tioga AC ($171,765)	(0)	(6-073-04)	518 Ryder Drive Pineville, LA 71360	LAD 981057441
Kenner ($52,050)	(40,600)	(6-115-01)	14 26th Street Kenner, LA 70062	LAD 089841902

STATE OF MAINE

Leeds ($52,050)	(0)	(2-011-01)	Route 202, RFD 3, Box 1990 Leeds, ME 04263	MED 980667810

STATE OF MARYLAND

Baltimore ($52,050)	(0)	(2-016-01)	1448 Desoto Road Baltimore, MD 21230	MDD 981034291

Glen Burnie ($52,050)	(40,600)	(2-016-02)	150 Penrod Court Section G & H Glen Burnie, MD 21061	MDD 000737106
Silver Springs ($52,050)	(40,600)	(2-058-01)	12164 Tech Road Silver Springs, MD 20904-1980	MDD 000737395
Odenton ($52,050)	(0)	(2-016-01)	Betson Court Odenton, MD 21230	MDD 982678385

STATE OF MASSACHUSETTS

Bridgewater ($52,050)	(0)	(2-022-03)	128 Elm Street Bridgewater, MA 02324	MAD 000846006
Marlborough ($52,050)	(0)	(2-022-02)	50A Brigham Marlborough, MA 01752	MAD 088978143
Salisbury ($52,050)	(0)	(2-022-01)	189A Willow Street Salisbury, MA 01950	MAD 060095569
West Brookfield ($52,050)	(0)	(2-184-01)	P.O. Box C Route 9 West Brookfield, MA 01585	MAD 096287354

STATE OF MICHIGAN

Saginaw ($84,253)	(0)	(4-059-01)	3899 Wolf Road Saginaw, MI 48601	MID 981000607
Grand Rapids ($84,253)	(0)	(5-061-01)	2700 Mullins Grand Rapids, MI 49505	MID 981000615
Mt. Clemens ($62,460)	(0)	(4-055-01)	44043 North Grosebeck Mt. Clemens, MI 48043	MID 981091838
Pontiac ($62,460)	(0)	(4-055-02)	751 Orchard Lake Road Pontiac, MI 48053	MID 000722686
Romulus ($62,460)	(0)	(4-055-03)	35201 Crane Road Romulus, MI 48174	MID 000772694
Mason ($120,513)	(0)	(4-010-01)	700 Zimmerman Road Mason, MI 48854	MID 981000359

STATE OF MINNESOTA

Cloquet ($52,050)	(0)	(5-050-01)	1302 18th Street Cloquet, MN 55720	MND 000686170
St. Paul ($80,000)	(0)	(5-103-01)	180 Ryan Drive St. Paul, MN 55117	MND 000823823
Blaine ($52,050)	(0)	(5-103-01)	Lot 1 and Hokanson Ind. Park Isanti St. NE Blaine, MN 55434	MND 981953045

Eagan AC ($171,765)	(40,600)	(5-103-02)	3227 Terminal Drive Eagan, MN 55121	MND 981097884
rnsville 52,050)	(0)	(5-103-02)	1401 Cliff Rd. Burnsville, MN 55337	MND 000686188

STATE OF MISSISSIPPI

Jackson ($52,050)	(0)	(6-078-01)	120 Richardson Drive Jackson, MS 39209	MSD 000776765
Southhaven AC ($171,765)	(0)	(0-007-44)	7217 Airways Avenue Southhaven, MS 38671	MSD 981030894

STATE OF MISSOURI

Blue Springs ($179,721)	(0)	(5-085-02)	24016 East 40 Highway Blue Springs, MO 64015	MOD 000669077
Cape Girardeau ($99,535)	(0)	(5-030-01)	Route 2, Box 549-D Cape Girardeau, MO 63701	MOD 000669051
Columbia ($52,050)	(0)	(5-042-01)	610 Big Bear Blvd. Columbia, MO 65201	MOD 980971626
St. Charles ($52,050)	(0)	(5-160-03)	4526 Towne Court, Lot #22 Harvestowne Industrial Park St. Charles, MO 63301	MOD 095486312
Springfield ($104,310)	(0)	(6-193-02)	734 Northwest Bypass 66 Springfield, MO 65802	MOD 000669069
Independence AC ($171,765)	(0)	(5-085-02)	901 Yuma Independence, MO 64056	MOD 980973564
Holnam/Safety-Kleen - Clarksville, MO ($204,296)	(0)		Hwy. 79 North P.O. Box 456 Clarksville, MO 63336	MOD 029729688

STATE OF NEBRASKA

Gering ($52,050)	(0)	(6-052-03)	RR 1, Box 15E Gering, NE 69341	NED 000687178
Grand Island ($52,050)	(0)	(5-065-01)	Highway 281 South Behind Grand Island Dodge Grand Island, NE 68801	NED 000687186
Grand Island ($52,050)	(0)	(5-065-01)	2700 W. 2nd Avenue Grand Island, NE 68801	NED
maha $52,050)	(0)	(5-127-01)	14564 Grover Street Omaha, NE 68144	NED 020185138
Omaha AC ($195,621)	(0)	(5-127-01)	Lamont & 139th St. Omaha, NE 68144	NED 981495724

STATE OF NEVADA

rth Las Vegas 52,050)	(0)	(7-087-01)	1655 Stocker Street North Las Vegas, NV 89030	NVD 007096761

STATE OF NEW MEXICO

Albuquerque ($52,050)	(40,600)	(7-008-01)	2720 Girard NE Albuquerque, NM 87107	NMD 000804294
Farmington ($52,050)	(40,600)	(7-008-21)	4200A Hawkins Road Farmington, NM 87401	NMD 980698849

STATE OF NEW YORK

Avon ($52,050)	(0)	(2-028-02)	1525 West Henrietta Road Avon, NY 14414	NYD 980753784
Colonie ($52,050)	(0)	(2-004-01)	Green Mountain Drive Colonie, NY 12110	APPLIED FOR
Congers ($52,050)	(0)	(2-118-01)	68 North Harrison Avenue Congers, NY 10920	NYD 000708164
Amityville ($52,050)	(0)	(2-118-08)	80 Seabro No. Amityville, NY 11701	NYD 000708198
atham ($52,050)	(0)	(2-004-01)	72 Sicker Road Latham, NY 12110	NYD 000708206
Mattydale ($52,050)	(0)	(2-187-01)	Factory & Mitchell P.O. Box 56 Mattydale, NY 13211	NYD 000824581
Lackawanna ($52,050)	(0)	(2-028-01)	75 N. Gates Avenue P.O. Box A Lackawanna, NY 14218	NYD 981556541
Thornwood ($52,050)	(0)	(2-118-05)	9 Walnut Place Thornwood, NY 10594	NYD 000708172
Waverly ($52,050)	(0)	(2-074-01)	Route 34 North Road #1 Waverly, NY 14892	NYD 000708156
Woodside ($52,050)	(0)	(2-118-06)	58-05 52nd Avenue Woodside, NY 11377	NYD 980785760

STATE OF NORTH CAROLINA

Charlotte ($78,100)	(0)	(3-031-01)	2320 Yadkin Avenue Charlotte, NC 28205	NCD 079060059
Raleigh ($52,050)	(0)	(3-171-01)	Sommerville Industrial Building Route 3, 6225 Old State Road Raleigh, NC 27603	NCD 000776740

High Point AC ($208,200)	(0)	(3-064-01)	High Point Building, Inc. Mendenhall Road High Point, NC 27263	NCD 077840148
St. Pauls ($78,100)	(0)	(3-031-02)	Hwy. 301 North St. Pauls, NC 28384	NCD 980846935

STATE OF NORTH DAKOTA

Fargo ($52,050)	(0)	(1-183-03)	1537-1/2 First Avenue South Fargo, ND 58103	NDD 000716738
Bismarck ($52,050)	(0)	(1-183-23)	3704 Saratoga Bismarck, ND 58501	NDD 980957070

STATE OF OHIO

Kent ($170,651)	(0)	(4-040-03)	4341 Mogadore Road Kent, OH 44240	OHD 981099401
Brunswick ($52,050)	(40,600)	(4-040-02)	1169 Industrial Parkway Brunswick, OH 44212	OHD 000720987
Hamilton ($173,722)	(0)	(4-037-01)	4579 Port Union Road Hamilton, OH 45011	OHD 084750579
Hebron Recycle Center ($762,572)	(0)		581 Milliken Drive SE Hebron, OH 43025	OHD 980587364
Groveport ($52,050)	(0)	(4-046-01)	4465 Marketing Place Groveport, OH 43125	OHD 981000664
Oregon ($173,920)	(0)	(4-190-01)	161 North Lallendorf Oregon, OH 43616	OHD 000721001
Tallmadge ($131,117)	(0)	(4-040-03)	2929 Mogadore Road Tallmadge, OH 44278	OHD 000720136
Warrensville Heights ($52,050)	(40,600)	(4-040-01)	26309 Miles Road, Unit M1 Warrensville Heights, OH 44128	OHD 000810275
Tipp City ($52,050)	(0)	(4-037-02)	4205 Lisa Drive Tipp City, OH 45371	OHD 980683155
Toledo ($52,050)	(0)	(4-190-01)	5148 Tractor Road Toledo, OH 43616	OHD 981097876
Youngstown ($52,050)	(0)	(4-196-01)	1171-1/2 N. Meridian Road Youngstown, OH 44509	OHD 980990162
Sharonville ($52,050)	(0)	(4-037-01)	11919 Tramway Drive Sharonville, OH 45241	OHD 981187313

STATE OF OKLAHOMA

Wheatland ($52,050)	(0)	(6-124-01)	7825 State Hwy. 152 Wheatland, OK 73097-0128	OKD 980878474

Tulsa ($74,127)	(40,600)	(6-193-01)	16215 East Marshall Street Tulsa, OK 74138	OKD 000763821

STATE OF OREGON

Springfield ($52,050)	(40,600)	(7-054-01)	550 Shelley Street Space C & D Springfield, OR 97477	ORD 000712067
Clackamas ($52,050)	(40,600)	(7-148-01)	11843 SE Highway 212 Clackamas, OR 97015	ORD 092895481
Clackamas AC ($124,413)	(0)	(7-148-01)	16540 SE 130th Street Clackamas, OR 97015	ORD 981766124

STATE OF PENNSYLVANIA

Kuhnsville ($171,765)	(0)	(2-007-01)	SEMA Building, Main Street Kuhnsville, PA 18104	PAD 980552020
Clairton ($52,050)	(0)	(4-145-02)	670 Cochran Mill Road Clairton, PA 15025	PAD 000738815
Erie ($52,050)	(0)	(4-057-01)	1606 Pittsburgh Avenue Erie, PA 16505	PAD 086673407
Malvern ($52,050)	(0)	(2-139-02)	Rear 147 West King Street Malvern, PA 19355	PAD 099081812
Athens ($52,050)	(0)	(2-074-01)	Industrial Park Rd. Rd 1 Box 19F Athens, PA 18810	PAD 987266673
Wilkes Barre ($52,050)	(40,600)	(2-180-01)	Hanover Industrial Park 600 Stewart Road Wilkes Barre, PA 18706	PAD 981737109
Fairless Hills ($52,050)	(0)	(2-139-01)	77 Canal Road Fairless Hills, PA 19030	PAD 987266715
Johnstown ($52,050)	(0)	(4-077-01)	150 Allenbille Drive Johnstown, PA 15904	PAD 981736143
West Mifflin ($52,050)	(0)	(4-145-02)	650 Noble Drive West Mifflin, PA 15122	PAD 982576258
New Kingstown ($52,050)	(0)	(2-067-01)	10 Eleanor Drive New Kingstown, PA 17072	PAD 000738823
Stoystown ($52,050)	(0)	(4-077-01)	Rt. 30, 1 Mile East of Stoystown Stoystown, PA 15563	PAD 000738831
Tullytown ($52,050)	(0)	(2-139-01)	Bldg. PP, #9 River Road Tullytown, PA 19007	PAD 065716813
Westchester ($52,050)	(0)	(2-139-03)	1142 Greenhill Road Westchester, PA 19380	PAD 000738849

Wilkes-Barre ($52,050)	(0)	(2-180-01)	131 Second Street Plains Township Wilkes-Barre, PA 18705	PAD 084872043

PUERTO RICO

Safety-Kleen Envirosystems Company of Puerto Rico, Inc. - Manati ($331,267)	(0)	Manati, PR 00701	KM 51, Hwy. 2 (P.O. Box 1098)	PRD 090399718
Safety-Kleen Envirosystems of Puerto Rico, Inc. - Dorado ($87,730)	(0)		KM 267, Hwy. 2 Dorado, PR 00646	PRD 981182421

STATE OF SOUTH CAROLINA

Greer ($52,050)	(0)	(3-066-01)	Old Gilreath Road Greer, SC 29651	SCD 981031040
Lexington Recycle Center & Branch ($398,738)	(0)		Route 5, Box 319 A Lexington, SC 29072	SCD 077995488
Florence ($52,050)	(0)	(3-043-21)	Highway 301 South Florence, SC 29501	SCD 980842785
Summerville ($52,050)	(0)	(3-179-21)	P.O. Box 2053 Rt. 17 A South Summerville, SC 29483	SCD 980709299
Holly Hill ($354,226)	(0)	(0-006-61	Rt. 2 Box 418 Hwy 453 South Holly Hill, SC 29059	SCD 003368891

STATE OF SOUTH DAKOTA

Sioux Falls ($52,050)	(0)	(1-183-05)	2000 North Westport Avenue Sioux Falls, SD 57107	SDD 000716696

STATE OF TENNESSEE

Dyersburg ($52,050)	(0)	(6-051-01)	2010 Brewer Road Dyersburg, TN 38024	TND 981027410
Knoxville ($52,050)	(42,132)	(3-080-01)	826 Stewart Knoxville, TN 37917	TND 079025698
Knoxville (52,505)	(0)	(3-080-01)	NW Industrial Park Pleasant Ridge Rd. Knoxville, TN 37921	Applied For
Nashville ($52,050)	(42,132)	(3-109-01)	215 Whitsett Road Nashville, TN 37210	TND 981474125

STATE OF TEXAS

Abilene ($52,050)	(40,600)	(6-002-01)	4234 Oil Belt Lane Abilene, TX 79605	TXD 062287883

Amarillo ($52,050)	(40,600)	(6-009-02)	3811 Interstate 40 East Amarillo, TX 79104	TXD 000747410
Corpus Christi ($52,050)	(0)	(6-048-01)	3820 Bratton Road Corpus Christi, TX 78415	TXD 000747402
Denton Recycle Center ($365,369)	(0)		1722 Cooper Creek Road Denton, TX 76201	TXD 077603371
El Paso ($52,050)	(0)	(6-056-01)	900A Hawkins Blvd. El Paso, TX 79905	TXD 000747394
Ft. Worth ($53,445)	(0)	(6-049-02)	6529 Midway Road Haltom City, TX 76117	TXD 981053416
Irving ($59,414)	(0)	(6-049-01)	2130A East Grauwyler Irving, TX 75061	TXD 981052061
Longview ($52,050)	(0)	(6-194-01)	202 Michael Place Longview, TX 75602	TXD 000747378
Lubbock ($52,050)	(0)	(6-009-01)	1 Mile East of Loop 289 On Highway 62 & 82 Lubbock, TX 79408	TXD 000747436
McAllen ($52,050)	(40,600)	(6-048-02)	1/4 Mile North Jackson Road 1/8 Mile West International McAllen, TX 78501	TXD 083145656
Midland ($52,050)	(0)	(6-002-02)	10043-B County Rd. 125-W Midland, TX 79711	TXD 981054617
Missouri City ($176,878)	(0)	(6-073-02)	1580 Industrial Road Missouri City, TX 77459	TXD 010803203
Orange ($52,050)	(0)	(6-073-03)	3304 Womack Road Orange, TX 77630	TXD 061290276
Pasadena ($52,050)	(0)	(6-073-01)	3333 Federal Road Pasadena, TX 77504	TXD 000747386
San Antonio ($58,042)	(0)	(6-169-01)	5243 Sinclair Road San Antonio, TX 78222	TXD 000729400
Waco ($52,050)	(0)	(6-049-03)	Rt. 12, Box 911 Highway 84 West Waco, TX 76710	TXD 980876015
Wichita Falls ($52,050)	(0)	(6-049-04)	1606 Missile Road Wichita Falls, TX 76306	TXD 000747428

STATE OF UTAH

Salt Lake City ($52,050)	(0)	(7-166-01)	394 Ironwood Drive Salt Lake City, UT 84115	UTD 052430741
Salt Lake City ($52,050)	(0)	(7-166-01)	1066 Pioneer Road Salt Lake City, UT 84104	UTD 980957088

STATE OF VERMONT

Barre ($58,900)	(0)	(2-105-01)	23 West Second Street Barre, VT 05641	VTD 000791699

STATE OF VIRGINIA

Bristol ($52,050)	(0)	(3-026-01)	2146 King Mill Road Bristol, VA 24201	VAD 981042955
Chesapeake ($52,050)	(0)	(3-121-01)	4545 Bainbridge Blvd. Chesapeake, VA 23320	VAD 000737346
Chester ($52,050)	(0)	(3-154-01)	1200 West 100 Road Chester, VA 23831	VAD 981043011
Vinton ($52,050)	(0)	(3-155-01)	Route 24 East of Vinton at O'Neal Drive Vinton, VA 24179	VAD 000737361

STATE OF WASHINGTON

Auburn ($52,050)	(40,600)	(1-181-01)	3210 C Street NE, Unit G Auburn, WA 98002	WAD 000712059
Lynwood ($52,050)	(40,600)	(7-092-01)	6303 212th Street SW, Suite C Lynwood, WA 98036	WAD 000712042
Pasco ($52,050)	(0)	(1-183-02)	814 E. Ainsworth Pasco, WA 99301	WAD 980978746
Spokane ($52,050)	(40,600)	(1-183-01)	9516 East Montgomery, Unit 16 Spokane, WA 99206	WAD 000712034

STATE OF WEST VIRGINIA

Nitro ($52,050)	(40,600)	(4-075-02)	Rock Branch Industrial Park Nitro, WV 25143	WVD 000737387
Fairmont ($52,050)	(40,600)	(4-145-23)	345 Locust Fairmont, WV 26554	WVD 980510895
Wheeling ($52,050)	(0)	(4-145-03)	10 Industrial Park Dr. Wheeling, WV 26003 Waukesha, WI 53186	WVD 981034101

STATE OF WISCONSIN

La Crosse ($52,050)	(0)	(5-150-01)	2109-1/2 Ward Avenue La Crosse, WI 54601	WID 980896641
North Prairie ($52,050)	(40,600)	(5-100-01)	113 Oakridge Drive, Lot 7 North Prairie, WI 53153	WID 045130713
Shawano ($52,050)	(40,600)	(5-176-01)	P.O. Box 266 Shawano, WI 54166	WID 000668822

Madison ($52,050)	(0)	(5-197-01)	2325 Daniels Street Madison, WI 53704	WID 980896633
Kaukauna ($52,050)	(0)	(5-176-01)	Kaukauna Ind. Park Kaukauna, WI 54130	WID 981187297
Waukesha ($52,050)	(0)	(5-100-01)	2200 S. West Avenue Waukesha, WI 53186	WID 981097769
$15,657,338	$4,048,501			

Closure Post-Closure

WILLIS CORROON

Willis Corroon
Corporation of
Illinois
135 South LaSalle Stree
Suite 1800
Chicago, IL 60603
Telephone 312-621-4700
Fax 312-372-0385
Telex 910-2214199
Cable ALEXANCO

January 6, 1992

Ms. Terri J. Chasteen
Environmental Specialist
Florida Department of
Environmental Regulation
Twin Towers Office Bldg.
2600 Blair Stone Road
Tallahassee, Florida 32399-2400

Re: Safety-Kleen Corp.
Hazardous Waste Transporter Certificate

Dear Terri:

In accordance with your letter of November 18, 1991 addressed to Melissa Hlebasko of Safety-Kleen Corp., enclosed are the following:

1. Completed Hazardous Waste Transporter Certificate of Liability Insurance with attached listing of locations.

2. Hazardous Waste Transporter Status Sheets for each location.

3. Status Report dated December 30, 1991 prepared by Victor San Augustin.

Should you have any questions or require additional information, please let me know.

Sincerely,

Joyce Henrickson
312/621-4965

cc: Ms. Julie Schmitz, Safety-Kleen Corp., 777 Big Timber Rd., Elgin, IL 60123
cc: Mr. Victor San Augustin, Safety-Kleen Corp., 129 Kentucky Ave.,S., Lakeland, FL 33801

encl

STATE OF FLORIDA

HAZARDOUS WASTE TRANSPORTER CERTIFICATE OF LIABILITY INSURANCE

1. National Union Fire Insurance Company
(Name of Insurer)
(the "Insurer"), of Pittsburgh, Pennsylvania
(Address of Insurer)
hereby certifies that it has issued liability insurance covering bodily injury and property damage including environmental restoration for sudden accidental occurrences to Safety-Kleen Corp.
(Name of Insured)
(the "Insured"), of 777 Big Timber Rd., Elgin, IL 60123
(Address of Insured)
in connection with the insured's obligation to demonstrate financial responsibility under Florida Administrative Code Rule 17-730.170. The coverage applies at:

EPA/DER I.D. No.	Name	Address

(See Attached List - Florida)

(If coverage is for multiple facilities, identify each facility insured.)

This insurance is primary and the company shall not be liable for amounts in excess of $ 2,000,000 for each accident, exclusive of legal defense costs. The coverage is provided under policy number RMCA1428019, issued on 10/1/91 (Date). The effective date of said policy is 10/1/91 (Date).

This insurance is excess and the company shall not be liable for amounts in excess of $_____ for each accident in excess of the underlying limit of $_____ for each accident, exclusive of legal defense costs. The coverage is provided under policy number _____, issued on _____ (Date). The effective date of said policy is _____ (Date).

2. The Insurer further certifies the following with respect to the insurance described in Paragraph 1:

(a) Bankruptcy or insolvency of the insured shall not relieve the Insurer of its obligations under the policy.

(b) The Insurer is liable for the payment of amounts within any deductible applicable to the policy, with a right of reimbursement by the insured for any such payment made by the Insurer.

(c) Whenever requested by the Secretary (or designee) of the Florida Department of Environmental Regulation (FDER), the Insurer agrees to furnish to the Department a signed duplicate original of the policy and all endorsements.

(d) Cancellation of the insurance, whether by the Insurer or the insured and any other termination of the insurance (e.g., expiration, non-renewal), will be effective only upon written notice and only after the expiration of thirty-five (35) days after a copy of such written notice is received by the Secretary of the FDER as evidenced by certified mail return receipt.

(e) The Insurer shall not be liable for the payment of any judgement or judgements against the Insured for claims resulting from accidents which occur after the termination of the insurance described herein, but such termination shall not affect the liability of the Insurer for the payment of any such judgement or judgements resulting from accidents which occur during the time the policy is in effect.

I hereby certify that the Insurer is licensed to transact the business of insurance, or eligible to provide insurance as an excess or surplus lines insurer, in one or more States including Florida.

Bernard M. Dunne

[Signature of Authorized Representative of Insurer

Bernard M. Dunne

[Type name] [Social Security Number]

Vice President

[Title]

Authorized Representative of

National Union Fire Insurance Company

[Name of Insurer]

500 W. Madison St.
Chicago, IL 60606

[Address of Representative]

STATE OF FLORIDA

EPA/DER I.D. NO.	NAME	ADDRESS
FLD 09787983	Safety-Kleen Corp.	505 Plumosa Dr. Altamonte Springs, FL 37201
FLD 984167791	Safety-Kleen Corp.	Lot 46B Quantum Industrial Park Boynton Beach, FL
FLD 980847214	Safety-Kleen Corp.	161 Industrial Loop South Orange Park, FL 32073
FLD 980840086	Safety-Kleen Corp.	7875 NW 54th Street Miami, FL 33166
FLD 984171694	Safety-Kleen Corp.	E. of NW 89th Ave. & NW 96th St. Medley, FL
FLD 000776716	Safety-Kleen Corp.	19200 Peachland Blvd. Port Charlotte, FL 33949
FLD 982133159	Safety-Kleen Corp.	Entrepot Blvd. Airport Ind. Park Tallahassee, FL 32303
FLD 980847271	Safety-Kleen Corp.	5809 24th Avenue South Tampa, FL 33619
FLD 984171165	Safety-Kleen Corp.	Lot 10 Northstar Business Park Sanford, FL 32771

safety-kleen corp

December 30, 1991

STATUS REPORT: Per Victor San Augustin, Regional Engineer

FLD 000 776 757	Delray Beach, FL This facility is no longer operational and is undergoing closure. All hazardous waste transportation is operated out of the Boynton Beach facility. Liability insurance for hazardous waste transportation is no longer needed.
FLD 049 557 408 ILD 051 060 408	Tampa, FL Elgin, IL These two facilities are no longer operational. Liability insurance for hazardous waste transportation is not needed.
FLD 984 171 165	Sanford, FL This site is not yet built. Hazardous waste will be transported from out of this facility once it is allowed to operate. It is projected that Sanford will commence operations in the later part of next year. Until this happens, hazardous waste will be transported out of the Altamonte Springs branch.
FLD 982 133 159	Tallahassee, FL (3082 W. Tharpe St. [Rear] 32303) This site is not operational. All hazardous waste transportation is operated out of the Entrepot Boulevard, Tallahassee facility. Liability insurance for hazardous waste transportation is no longer needed.

FLORIDA DEPARTMENT OF ENVIRONMENTAL REGULATION

HAZARDOUS WASTE TRANSPORTER STATUS SHEET

Transporter Name: SAFETY-KLEEN CORP.

Mailing Address: 777 BIG TIMBER ROAD
ELGIN, ILLINOIS 60123

Contact Person: STEVE BECKER

Title: BRANCH MANAGER

Telephone number: (904) 576-9764

Facility Address: 4426 ENTREPOT BLVD.
TALLAHASSEE, FLORIDA 32310

Facility EPA ID: FLD 982133159

Insurance Company:

Address:

Contact Person:

Telephone number:

Policy Number:

Expiration Date:

Completed by: Joyce Henrickson
Willis Corroon Corporation of Illinois Date: 1/6/92
(Please print or type)

Signature: Joyce Henrickson

FLORIDA DEPARTMENT OF ENVIRONMENTAL REGULATION

HAZARDOUS WASTE TRANSPORTER STATUS SHEET

Transporter Name: SAFETY-KLEEN CORP.

Mailing Address: 777 BIG TIMBER ROAD
ELGIN, ILLINOIS 60123

Contact Person: RUSS GIAMBRONE

Title: BRANCH MANAGER

Telephone number: (904) 264-2607

Facility Address: 161 INDUSTRIAL LOOP SOUTH
ORANGE PARK, FLORIDA 32073

Facility EPA ID: FLD 980847214

==========

Insurance Company:

Address:

Contact Person:

Telephone number:

Policy Number:

Expiration Date:

==========

Completed by: Joyce Henrickson
Willis Corroon Corporation of Illinois Date: 1/6/92
(Please print or type)

Signature: Joyce Henrickson

HWT STATUS FORM REV. 0 (OCT 91)

FLORIDA DEPARTMENT OF ENVIRONMENTAL REGULATION

HAZARDOUS WASTE TRANSPORTER STATUS SHEET

Transporter Name: SAFETY-KLEEN CORP.

Mailing Address: 777 BIG TIMBER ROAD
ELGIN, ILLINOIS 60123

Contact Person: FRANK TAYLOR

Title: BRANCH MANAGER

Telephone number: (813) 626-1203

Facility Address: 5809 24th AVENUE SOUTH
TAMPA, FLORIDA 33619

Facility EPA ID: FLD 980847271

==========

Insurance Company:

Address:

Contact Person:

Telephone number:

Policy Number:

Expiration Date:

==========

Completed by: Joyce Henrickson
Willis Corroon Corporation of Illinois Date: 1/6/92
(Please print or type)

Signature: Joyce Henrickson

FLORIDA DEPARTMENT OF ENVIRONMENTAL REGULATION

HAZARDOUS WASTE TRANSPORTER STATUS SHEET

Transporter Name: SAFETY-KLEEN CORP.

Mailing Address: 777 BIG TIMBER ROAD
ELGIN, ILLINOIS 60123

Contact Person: PAUL JOHNSON

Title: BRANCH MANAGER

Telephone number: (407) 830-6906

Facility Address: 505 PLUMOSA DRIVE
ALTAMONTE SPRINGS, FLORIDA 32701

Facility EPA ID: FLD 097837983

Insurance Company:

Address:

Contact Person:

Telephone number:

Policy Number:

Expiration Date:

Completed by: Joyce Henrickson
Willis Corroon Corporation of Illinois Date: 1/6/92
(Please print or type)

Signature: Joyce Henrickson

FLORIDA DEPARTMENT OF ENVIRONMENTAL REGULATION

HAZARDOUS WASTE TRANSPORTER STATUS SHEET

Transporter Name: SAFETY-KLEEN CORP.

Mailing Address: 777 BIG TIMBER ROAD
ELGIN, ILLINOIS 60123

Contact Person: PAUL JOHNSON

Title: BRANCH MANAGER

Telephone number: (407) 830-6906

Facility Address: LOT 10
NORTHSTAR BUSINESS PARK
SAMFORD, FLORIDA 32771

Facility EPA ID: FLD 984171165

Insurance Company:

Address:

Contact Person:

Telephone number:

Policy Number:

Expiration Date:

Completed by: Joyce Henrickson
Willis Corroon Corporation of Illinois Date: 1/6/92
(Please print or type)

Signature: Joyce Henrickson

HWT STATUS FORM REV. 0 (OCT 91)

FLORIDA DEPARTMENT OF ENVIRONMENTAL REGULATION

HAZARDOUS WASTE TRANSPORTER STATUS SHEET

Transporter Name: SAFETY-KLEEN CORP.

Mailing Address: 777 BIG TIMBER ROAD
ELGIN, ILLINOIS 60123

Contact Person: DON MURPHY

Title: BRANCH MANAGER

Telephone number: (813) 629-4711

Facility Address: 19200 PEACHLAND BLVD.
PORT CHARLOTTE, FLORIDA 33949

Facility EPA ID: FLD 000776716

Insurance Company:

Address:

Contact Person:

Telephone number:

Policy Number:

Expiration Date:

Completed by: Joyce Henrickson
Willis Corroon Corporation of Illinois Date: 1/6/92
(Please print or type)

Signature: Joyce Henrickson

FLORIDA DEPARTMENT OF ENVIRONMENTAL REGULATION

HAZARDOUS WASTE TRANSPORTER STATUS SHEET

Transporter Name: SAFETY-KLEEN CORP.

Mailing Address: 777 BIG TIMBER ROAD
ELGIN, ILLINOIS 60123

Contact Person: TOM SANDS

Title: BRANCH MANAGER

Telephone number: (407) 736-1339

Facility Address: LOT 46B
QUANTUM INDUSTRIAL PARK
BOYNTON BEACH, FLORIDA 33426

Facility EPA ID: FLD 984167791

Insurance Company:

Address:

Contact Person:

Telephone number:

Policy Number:

Expiration Date:

Completed by: Joyce Henrickson
Willis Corroon Corporation of Illinois Date: 1/6/92
(Please print or type)

Signature: Joyce Henrickson

HWT STATUS FORM REV. 0 (OCT 91)

FLORIDA DEPARTMENT OF ENVIRONMENTAL REGULATION

HAZARDOUS WASTE TRANSPORTER STATUS SHEET

Transporter Name: SAFETY-KLEEN CORP.

Mailing Address: 777 BIG TIMBER ROAD
ELGIN, ILLINOIS 60123

Contact Person: JORGE CARVAJAL

Title: BRANCH MANAGER

Telephone number: (305) 591-9409

Facility Address: 7875 NW 54TH STREET
MIAMI, FLORIDA 33166

Facility EPA ID: FLD 980840086

Insurance Company:

Address:

Contact Person:

Telephone number:

Policy Number:

Expiration Date:

Completed by: Joyce Henrickson
Willis Corroon Corporation of Illinois Date: 1/6/92
(Please print or type)

Signature: Joyce Henrickson

HWT STATUS FORM REV. 0 (OCT 91)

FLORIDA DEPARTMENT OF ENVIRONMENTAL REGULATION

HAZARDOUS WASTE TRANSPORTER STATUS SHEET

Transporter Name: SAFETY-KLEEN CORP.

Mailing Address: 777 BIG TIMBER ROAD
ELGIN, ILLINOIS 60123

Contact Person: JORGE CARVAJAL

Title: BRANCH MANAGER

Telephone number: (305) 591-9409

Facility Address: EAST OF NW 89TH AVE., AND NW 96TH STREET
MEDLEY, FLORIDA 33166

Facility EPA ID: FLD 984171694

Insurance Company:

Address:

Contact Person:

Telephone number:

Policy Number:

Expiration Date:

Completed by: Joyce Henrickson
Willis Corroon Corporation of Illinois Date: 1/6/92
(Please print or type)

Signature: Joyce Henrickson

HWT STATUS FORM REV. 0 (OCT 91)

ATTACHMENT II.A.3

FLOOD INFORMATION

ATTACHMENT II.A.4

FACILITY SECURITY INFORMATION

Figure II.A.4(a)-1
Security Signage
Safety-Kleen Corp. Facility
Medley, Florida

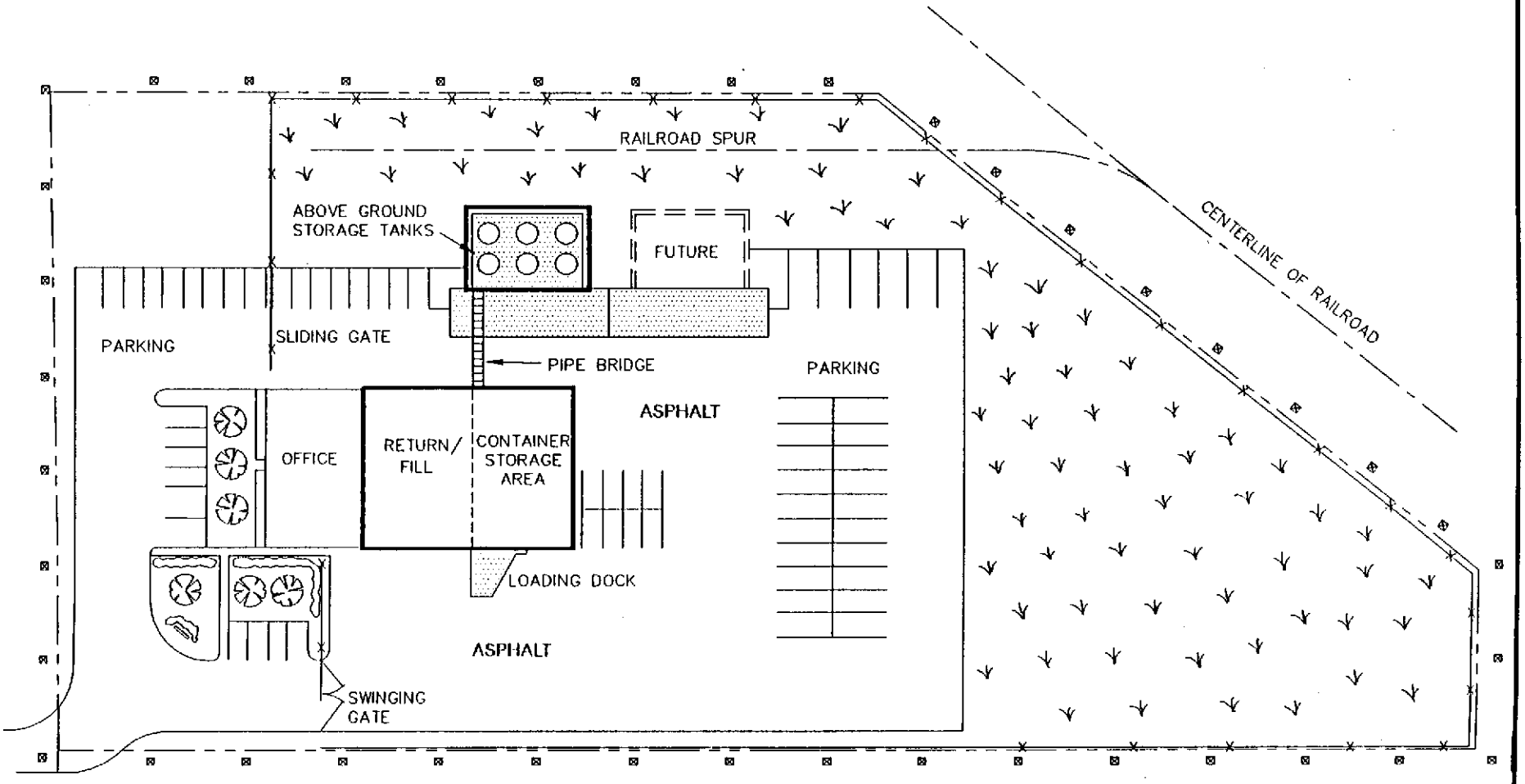

LEGEND

- PROPERTY BOUNDARY
- HAZARDOUS WASTE MANAGEMENT AREAS
- CHAIN-LINK FENCE
- CONCRETE
- WARNING SIGNS
- GRASS

NOTE: ALL AREAS WHICH ARE NOT CONCRETE OR LANDSCAPED ARE ASPHALT

N

0 80
FEET

The ERM Group ®

13112.21/31121SS/012792-2

II.A.4(a)-1A

ATTACHMENT II.A.4(b)

CONTINGENCY PLAN AND EMERGENCY PROCEDURES FOR DAILY BUSINESS OPERATIONS

TABLE OF CONTENTS

LIST OF FIGURES

LIST OF TABLES

ATTACHMENT II.A.4(b)

CONTINGENCY PLAN AND EMERGENCY PROCEDURES FOR DAILY BUSINESS OPERATIONS

GENERAL FACILITY INFORMATION

Purpose

The contingency plan and emergency procedures are designed to ensure that Safety-Kleen is prepared to address emergency situations rapidly and in a manner to prevent or minimize hazards to human health or the environment from fire, explosion, or any unplanned sudden or non-sudden release of hazardous material constituents to the air, soil, surface water, or ground water at the facility.

The provisions of the contingency plan are to be carried out immediately if there is a fire, explosion, or release of hazardous materials that could threaten human health or the environment. All contingency plan responses must conform with the procedures contained in this plan.

General Description of Activities

The business activities conducted at the Medley Service Center will relate to the leasing and servicing of Safety-Kleen Parts Cleaning Equipment, including the provisions of a solvent leasing service for the customers. Clean solvents will be distributed from, and the used solvents returned to, the service center, where separate storage tanks will be utilized for the storage of clean and used mineral spirits (solvent), spent antifreeze, and where warehouse space will be designated for the storage of containers of both clean and used immersion cleaner, mineral spirits sludge, antifreeze, paint waste, fluid recovery service wastes (FRS), and dry cleaning wastes (chlorinated solvent).

The mineral spirits will be transported in covered containers between the service center and customers. Upon returning to the service center, the used mineral spirits will be

transferred from the containers into a wet dumpster (solvent return receptacle) in which coarse solids in the mineral spirits are retained. Used mineral spirits from the wet dumpster will flow into a 20,000-gallon aboveground tank for storage. Used mineral spirits solvent will be picked up periodically by a bulk tank truck from the recycle facility which at the same time will deliver clean mineral spirits. The sludge in the wet dumpster will be periodically cleaned out, containerized, and temporarily stored in the container storage area for later shipment to the recycle facility for reclamation. Satellite accumulation of mineral spirits occurs int he return/fill area. These satellite accumulation points are associated with the operation of the dumpsters.

The immersion cleaner will remain in covered containers at all times during transportation and storage. The solvent will not be transferred to another container while being used by the customers or while in storage at the service center. Dry cleaning wastes will be picked up at commercial dry cleaning establishments in containers and stored temporarily at the service center. The containers will be picked up periodically for recycling at the recycle facility.

Dry cleaning wastes consist of spent filter cartridges, powder residue from diatomaceous or other powder filter systems, and still bottoms. The still bottoms, powder residue, and filters are packaged on the customer's premises in containers. All containers are DOT-approved.

The antifreeze waste is approximately one-third water and two-thirds antifreeze (ethylene glycol) and contaminants. These wastes are deposited into a carboy or containers by the customer, which are located on the customer's premises. The contents of the carboy are pumped into a tanker truck or containers by a Safety-Kleen sales representative. At the service center, they are then pumped into a 20,000-gallon storage tank (if handled in bulk) or placed in the container warehouse (if handled in containers) for shipment to a Safety-Kleen recycle center.

Paint wastes consist of various lacquer thinners and paints. The waste will be collected in containers at the customer's place of business and the containers will then be palletized and stored in the container storage area of the warehouse.

FRS wastes received at the facility are classified as characteristic wastes (D-waste codes), non-specific source wastes (F-waste codes), listed wastes from specific sources (K-wastes), commercial chemical products, manufacturing intermediates or off-specification chemical commercial products (U-waste codes). Most of the time, a waste stream will be some combination of specific components, and be categorized as a D- or F-waste. The FRS wastes are collected in containers. The FRS wastes are transfer wastes only.

Containers will be palletized whenever possible (four 55-gallon, five 20- or 30-gallon, nine 16-gallon, or twelve 5-gallon containers, or 16 boxes per pallet) to facilitate shipping and storage. Pallets may be stacked up to six feet high or two high (whichever is higher) while in storage and during transport. This will prevent the containers from contacting any standing liquid while they are in storage.

The waste products exhibit essentially the same biological, physical, and chemical properties as the fresh product. Used products are basically fresh products with impurities of dirt and metals. The MSDSs provided in Appendix A represent the biological, physical, and chemical properties of the fresh products.

Figures II.A.4(b)-1 and II.A.4(b)-2 show the basic, proposed site and floor plans.

EMERGENCY NOTIFICATION

Emergency Coordinator

The Branch Manager or his designate is the emergency coordinator. Table II.A.4(b)-1 includes the names, home addresses, and both office and home phones of the primary emergency coordinator and his alternates. At least one employee will be either present

Figure II.A.4(b)-1
Site Layout Map
Safety-Kleen Corp. Facility
Medley, Florida

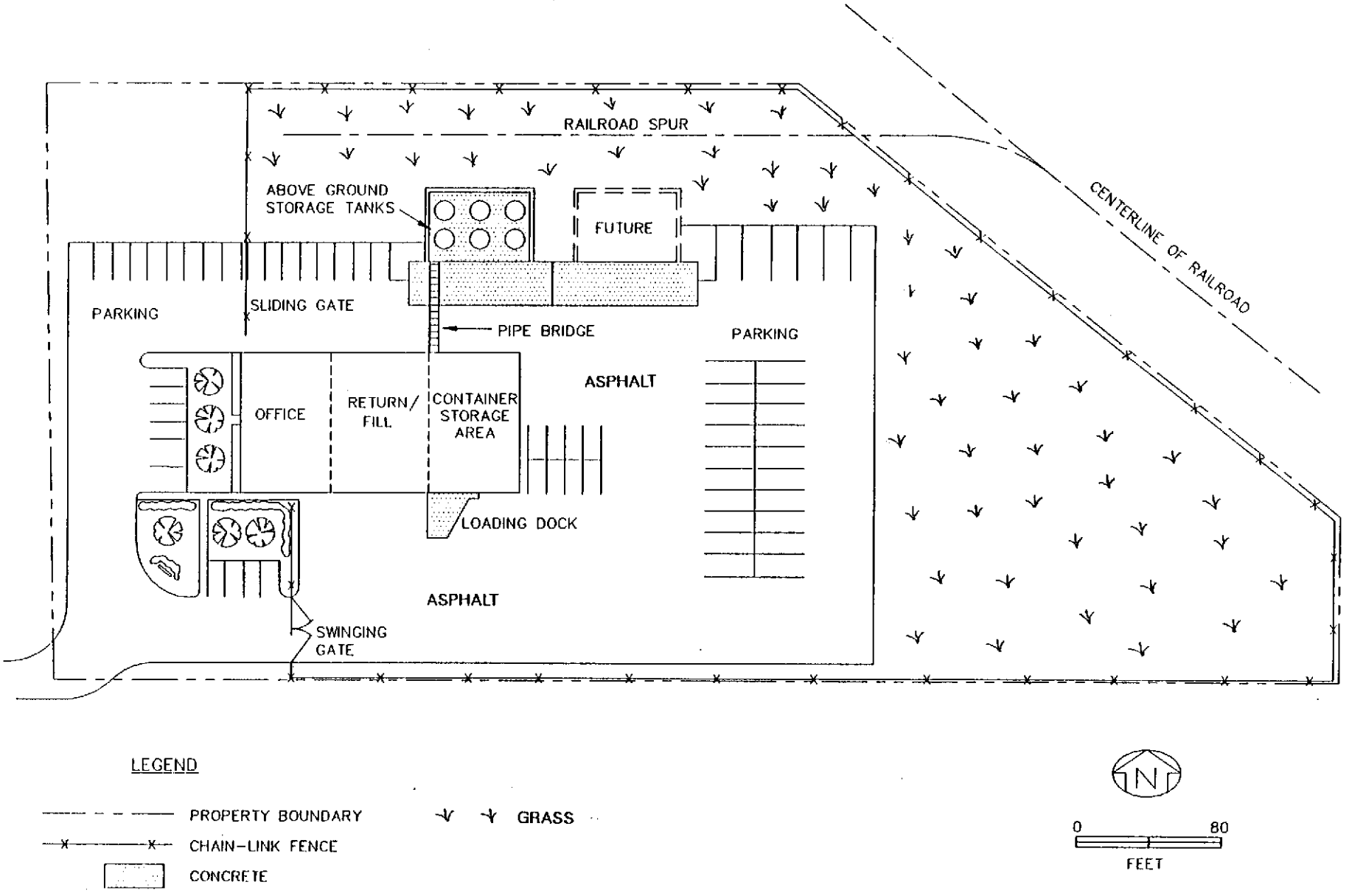

13112.21/31121BM/012792-2

II.A.4(b)-3A

The ERM

FIGURE II.A.4(b)-2

Container Storage Location

Safety-Kleen Corp. Facility
Medley, Florida

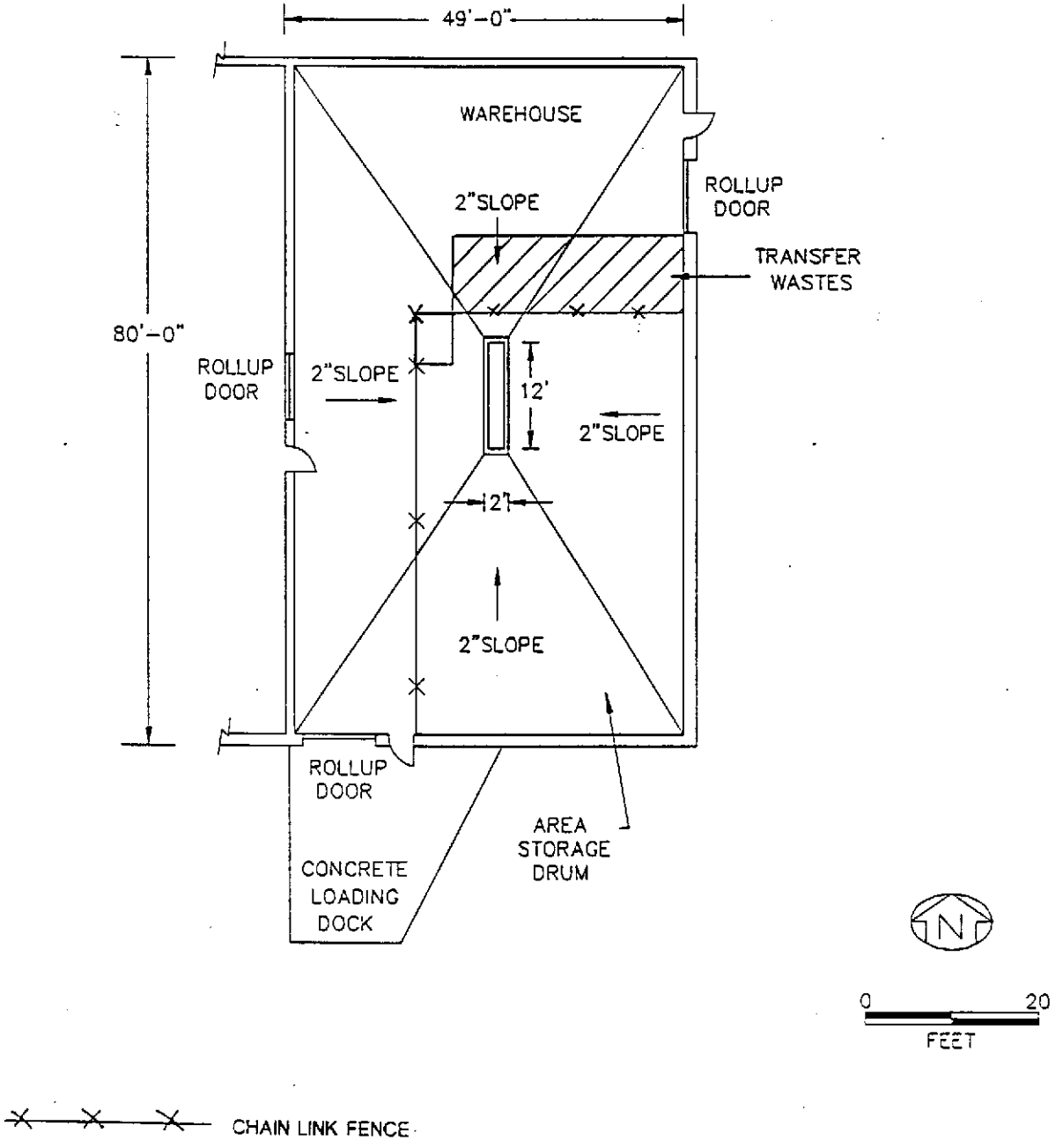

TABLE II.A.4(b)-1

EMERGENCY NOTIFICATION

Emergency Coordinators

Primary: Jorge Carvajal
14802 SW 69th Street
Miami, FL 33193
Home: (305) 386-1955
Office: (305) 891-9409

Alternate: Gary Alfonso
5230 SW 98th Court
Miami, FL 33165
Home: (305)279-7902
Office: (305) 891-9409

Emergency Notification Phone Numbers

Safety-Kleen Environmental, Health and Safety Department
Telephone: (708) 888-4660 (24-hour number)

National Response Center
Telephone: (800) 424-8802

Florida Department of Emergency Management
Telephone: (904) 488-1324

FDER-Southeast District, 1900 South Congress Avenue, West Palm Beach, FL 33406
Telephone: (407) 433-2650

Emergency Team to be Notified

Metro Dade Fire Department
6000 SW 87th Avenue
Miami, FL 33173
911 or (305) 596-8000

Metro Dade Police Department
1850 NW 86th Avenue
Miami, FL 33166
911 or (305) 596-8000

Palmetto General Hospital
2001 West 68th Street
Hialeah, FL 33016
(305) 823-5000

O.H. Materials Company
P.O. Box 551
Findley, OH 45840
(800) 537-9540
(Primary Clean-Up Contractor)

AMO Pollution Services, Inc.
P.O. Box 311B
Canonsburg, PA 15317
(800) 325-1398
(Secondary Clean-Up Contractor)

Ryckman's Emergency Action and Consulting Team
P.O. Box 27310
St. Louis, MO 63141
(800) 325-1398
(Secondary Clean-Up Contractor)

on the facility premises or on call with responsibility for coordinating all emergency response measures at all times. This primary emergency coordinator and alternate emergency coordinator will be thoroughly familiar with all aspects of the facility's contingency plan, all operations and activities at the facility, the location and characteristics of materials handled, the location of all records within the facility, and the facility layout. In addition, these coordinators have the authority to commit the resources needed to carry out the contingency plan.

EMERGENCY RESPONSE AGENCIES AND TEAM MEMBERS

The agencies and response team members to be notified whenever an imminent or actual emergency occurs are presented in Table II.A.4(b)-1. A Field Spill Report Form is shown in Table II.A.4(b)-2.

ACTIONS OF THE EMERGENCY COORDINATOR

Whenever there is an imminent or actual emergency situation, the emergency coordinator (or his or her designee when the emergency coordinator is on call) must immediately:

a. Activate internal or communication systems to notify all facility personnel. The relatively small size of this Service Center makes direct verbal communication the most expedient form of emergency notification. The emergency coordinator may also elect to proceed to the front of the building and repeatedly sound a car horn to notify building occupants of an emergency. A head count will be performed by the emergency coordinator.

b. Notify appropriate state or local agencies with designated response roles if their help is needed.

c. Summon the primary emergency coordinator, if he is absent.

Table II.A.4(b)-2
SAFETY-KLEEN CORP.
Field Spill Report Form

Report all spills to the Safety-Kleen Environment, Health and Safety Dept. immediately.

1. Facility Number_____ Facility Location_____
2. Date of spill_____ Time_____ a.m./p.m.
3. Report from:_____ Title_____
4. Location of spill:_____
5. Material spilled:_____ Quantity_____
6. Any injuries or property damage? Yes or No If yes, explain._____
7. Cause of spill? (Explain in detail.)_____
8. Describe the scene in detail (including nearby surface water or sewer and distance, type of surface spilled on, was spill contained)._____
9. Describe clean-up action taken in detail. How much material was not recovered?_____
10. Person involved in incident._____
11. Vehicle #_____ Company_____
12. Accident resulted from activities involving (circle all that apply):

    SK Fleet Branch Personnel Outside Carrier Customer Other
13. List any emergency agencies at scene._____
14. Are there homes or businesses nearby? Yes or No Distance?_____
15. Notification:

	S-K Environment Dept. 1-800-669-5740 1-312-888-4660 (24 hr.)*	Nat'l Response Center 1-800-424-8802	State 1- - -
Date/time:	_____	_____	_____
Contact name:	_____	_____	_____
Comments rec'd:	_____	_____	_____
	_____	_____	_____
	_____	_____	_____
Report Number:	_____	_____	_____

16. Action taken to prevent recurrence._____

Use back of form if additional space is needed for any item.

7. Signature_____

After completing this form, file copy 1 in the Spill Incident File at the branch, and send copy 2 to the SK Environment, Health and Safety Department in Elgin and copy 3 to the Regional Environmental Engineer.

*NOTE: After 11/11/89 telephone number will be (708) 888-4660

Whenever a release, fire, or explosion occurs, the emergency coordinator must immediately identify the character, exact source, amount, and areal extent of any released materials. Because of the limited types of chemicals in storage, the identification processes can easily be performed visually.

Procedure for Assessing Possible Hazard to the Environment and Human Health:

a. After identification of the character, source, amount, and extent of a release, fire, or explosion, the emergency coordinator must decide whether the situation can be contained or cleaned up by plant personnel and equipment.

b. If a fire or explosion is determined uncontrollable by plant personnel or threatening neighboring establishments or population, assistance from a local emergency response agency shall be summoned immediately and an evacuation order be requested.

c. In case of a release outside of the containment area that is deemed immediately uncontainable or unrecoverable, the local emergency response agency and/or specialty cleanup contractor shall be called in.

d. After termination of a fire or explosion, containment and preliminary cleanup of a spill, evaluate whether residues in the form of gas or liquid have become airborne, seeped into ground water, and/or flowed into surface water bodies.

e. Expert assistance should be requested to determine whether the escaped materials are potentially harmful and whether the receiving medium ultimately will be a populated area, public water supply source, a private well, or an environmentally sensitive area.

f. Additional steps shall then be taken to mitigate the potential impact on the environment and human health, in accordance with expert recommendations.

If the emergency coordinator determines that the facility has had a release, fire, or explosion that could threaten human health, or the environment outside the facility, the coordinator must report those findings, as follows:

a. If the assessment indicates that evacuation of local areas may be advisable, the coordinator must immediately notify appropriate authorities. The coordinator must be available to help appropriate officials decide whether local areas should be evacuated.

b. The coordinator must immediately notify the Southeast District of the FDER, (407) 954-9668 and the government designated emergency coordinator (Florida Department of Emergency Management (904) 488-1324) and/or the National Response Center (800) 424-8802, by telephone.

The report must include:

(1) Name and telephone number of notifier;

(2) Name and address of facility;

(3) Time and type of incident (e.g., release, fire);

(4) Name and quantity of material(s) involved, to the extent known;

(5) The extent of injuries, if any; and

(6) The possible hazards to human health, or the environment outside the facility.

Immediate assistance in assessing and responding to an emergency is obtained by the emergency coordinator by calling the 24-hour emergency number of the Safety-Kleen Corporation Environmental, Health and Safety Department ((708) 888-4660).

During an emergency, the emergency coordinator must take all reasonable measures necessary to ensure that fires, explosions, and releases do not occur, recur, or spread to other hazardous waste at the facility. These measures must include, where applicable, stopping processes and operations, collecting and containing released waste, and removing or isolating containers.

If the facility stops operations in response to a fire, explosion, or release, the emergency coordinator must monitor for leaks, pressure buildup, gas generation, or ruptures in valves, pipes, or other equipment, wherever this is appropriate.

Immediately after an emergency, the emergency coordinator must provide for treating, storing, or disposing of recovered waste, contaminated soil or surface water, or any other material that results from a release, fire, or explosion at the facility.

The emergency coordinator must ensure that, in the affected area(s) of the facility:

a. No waste that may be incompatible with the released material is treated or stored until cleanup procedures are completed; and

b. All emergency equipment listed in the contingency plan is cleaned and fit for its intended use before operations are resumed.

The owner or operator must notify the appropriate state and local authorities that the facility is in compliance with the requirements of the preceding paragraph, before operations are resumed in the affected area(s) of the facility.

The owner or operator must note in the operating record the time, date, and details of any incident that requires implementing the contingency plan. Within 15 days after the incident, the owner must submit a written report on the incident to the Southeast District of the FDER, 1900 South Congress Avenue, Suite A, West Palm Beach, Florida 33406 (407) 954-9668. The report must include:

a. Name, address, and telephone number of the owner or operator;

b. Name, address, and telephone number of the facility;

c. Date, time, and type of incident (e.g., fire, explosion);

d. Name and quantity of material(s) involved;

e. The extent of injuries, if any;

f. An assessment of actual or potential hazards to human health or the environment, where this is applicable; and

g. Estimated quantity and disposition of recovered material that resulted from the incident.

POTENTIAL SPILL SOURCES

The following is a list of activities that have the potential for a small scale (less than 30 gallons of waste) pollution incident.

a. Moving of containers.

Every time a container is moved, the possibility exists that it could tip over or be dropped. To minimize the possibility of spillage of solvent under those conditions, all container lids must be secured before the container is moved.

b. Delivery truck container transfers.

(1) Individual delivery containers house from 5 to 30 gallons of waste, a quantity which can be contained by oil sorbent clay or pads, if accidentally spilled.

(2) Each vehicle is equipped with a hoist and hand cart for ease of moving clean solvent off the truck and into the customer's shop and returning the dirty solvent to the truck.

(3) Clamp type lids are on containers during movement to prevent a spill.

(4) Each truck should contain a shovel and a quantity of sorbent material to contain a minor spill.

(5) The cargo should be secured in the route vehicle before transit.

Spills Inside Buildings

In the event of a spill indoors, the doors and windows should be opened to improve the ventilation in the confined area. Following the instructions of the Material Safety Data Sheet (MSDS), the worker would enter the area wearing rubber gloves, boots, and respirator and mop up the liquid and return it to dirty storage. The cleanup is completed only when the workers have cleaned themselves and the emergency equipment with soap and water.

Spills on Concrete Pads

Concrete pads in loading and unloading areas are, in most cases, equipped with emergency containment. Under most spill conditions, product can be totally contained on the concrete surface and in the catchment system. Upon containment, arrangements must be immediately undertaken to recover the material. Any soil that may be involved must be removed and treated as a hazardous waste.

Tank Spills or Leakage

Aboveground tanks are underlain by a concrete slab and surrounded by a concrete dike to contain any spilled or leaked solvent. The containment system has been sized in accordance with the regulations, and the product will be totally contained under most spill conditions. Should a spill occur, arrangements must be immediately undertaken to recover the material. In the event of leakage, tank repair or replacement will be initiated. Any soil that may be involved must be removed and treated as hazardous waste.

Spill Control Procedures

If a harmful discharge occurs:

a. Stop the discharge, if possible, by immediately transferring the liquid to a good container.

b. Retain, contain, or slow the flow of the material, if possible, by diking with sorbent pad or dirt. Appropriate personal protective equipment should be worn. Pump and mop up the liquid from the floor into a good container, and return the container to storage and then later to the recycle center for reclamation/disposal. The area and equipment that comes in contact with the spill must be decontaminated with soap and water. All residues resulting from containment and decontamination should be collected for proper disposal at a Safety-Kleen recycle center.

c. If the material escapes the containment efforts, immediately call the cleanup contractor with response time less than two hours (Table II.A.4(b)-1). Record the date, time, and name of person taking the message. Call the primary emergency coordinator, if he is absent.

d. Immediately recover spilled solvent to reduce property and environmental damage using the emergency and safety equipment stored onsite for such situations (Figure II.A.4(b)-3) and Table II.A.4(b)-3 or call in emergency response contractors (Table II.A.4(b)-1). Start recovery operations immediately.

After recovery of spilled solvent, wash all contaminated impervious surfaces and equipment with soap and water. The residue of spill- or fire-contaminated soils and waste waters must be removed and disposed of at a Safety-Kleen recycle center. In addition, the recovered solvent will be sent to a Safety-Kleen recycle center for reclamation.

e. Report any incident as soon as possible to Safety-Kleen Corporate Environmental Department on the 24-hour telephone line: (708) 888-4660. If the Environmental Department does not respond within 30 minutes, call the Florida Department of Emergency Management (telephone: (904) 488-1324) or the National Response Center (telephone: (800) 424-8802) and Southeast District of the FDER, 1900 Congress Avenue, Suite A, West Palm Beach, Florida 33406, (407) 954-9668.

f. The person reporting a spill should be prepared to give his name, position, company name, address, and telephone number. The person reporting also should give the nature of the material spilled (e.g., immersion cleaner, etc.) and, if possible, some estimate of the amount, and whether it is near a stream or could enter a stream by flowing through ditches or storm sewers.

Figure II.A.4(b)-3
Location of Emergency Equipment
Safety-Kleen Corp. Facility
Sanford, Florida

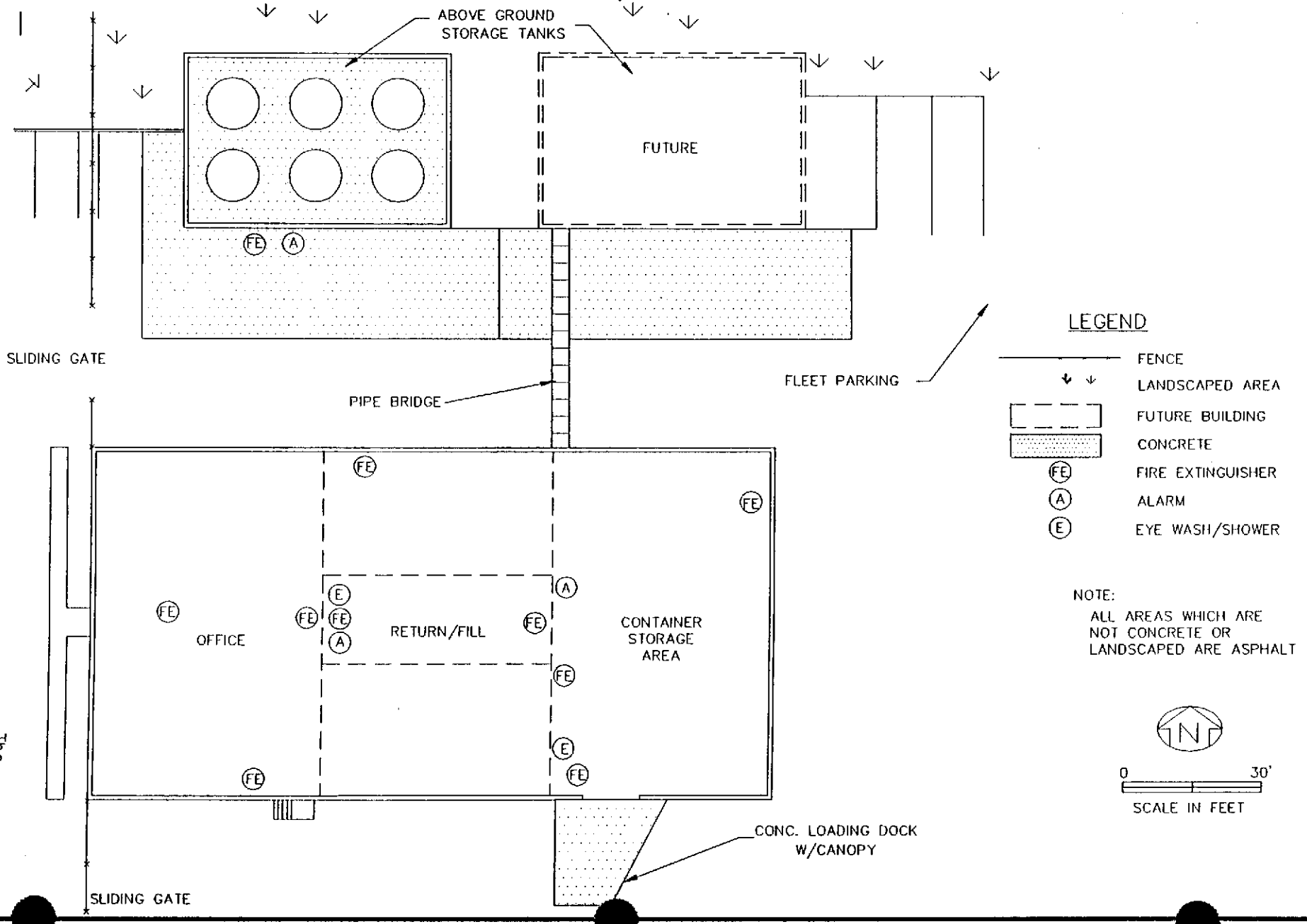

TABLE II.A.4(b)-3

EMERGENCY RESPONSE EQUIPMENT

Description	Type/Capacity	Location	Quantity
Fire Extinguisher	ABC (10 lb)	Container Storage Area	9
Fire Extinguisher	ABC	Tank Storage Area	1
Eyewash	Fountain	Container Storage Area	1
Eyewash	Fountain	Return/Fill Shelter	1
First-Aid		Container Storage Area	1
Telephones	Standard	Manager's Office	1
Telephones	Standard	Secretary's Desk	1
Telephones	Standard	Container Storage Area	2
Gloves	Rubber	Emergency Equip. Area	Min. 3
Boots (optional)	Rubber	Emergency Equip. Area	Min. 3
Protective Clothing	Apron	Emergency Equip. Area	Min. 3
Eye Protection	Goggles/Safety Glasses	Emergency Equip. Area	Min. 3
Sorbent Material	Oil Absorbing	Emergency Equip. Area	Min. 1 bale
Shovel	Standard	Emergency Equip. Area	Min. 1
Mop and Bucket	Standard	Emergency Equip. Area	Min. 1
Pump	Hand-held, Electric	Emergency Equip. Area	Min. 1
Wet/Dry Vacuum	Portable, Electric	Emergency Equip. Area	1
Empty Drums for Overpack	30, 55, and 85 gallons	Container Storage Area	9
Alarm	N/A	Tank Storage Area	1
Alarm	N/A	Container Storage Area	1
Alarm	N/A	Return/Fill Shelter	1

If assistance is needed, the emergency coordinator should describe the containment status and specify any additional equipment needed. When reporting a spill, record the date and time of the call and the name of the person answering the call at the above number.

Spill prevention plans are reviewed with facility personnel every year, and records of the training are kept at the facility.

Every spill must be recorded on the attached form with the revision of the contingency plan to prevent similar spills in the future. A copy of this report will be sent to the Corporate Environment Health and Safety Department.

Reports of emergency incidents will be transmitted to the Secretary of the FDER or his designee within 15 days of occurrence. This report shall include:

a. Name, address, and telephone number of the owner of operator;

b. Name, address, and telephone number of the facility;

c. Date, time, and type of incident (e.g., fire, explosion);

d. Name and quantity of materials involved;

e. The extent of injuries, if any;

f. An assessment of actual or potential hazards to human health or the environment, where this is applicable;

g. Estimated quantity and disposition of recovered material that resulted from the incident; and

h. Provide a sketch depicting the location and extent of the spill, if applicable.

DECONTAMINATION

Once the spilled material has been cleaned-up, the spill area and equipment used during the spill clean-up must be decontaminated and/or disposed.

Equipment

The equipment used to clean the area includes mops, pails, scrub brushes, and a wet/dry vacuum. Equipment which is considered reusable (i.e., pails, wet/vac, hoses) will be washed with detergent and the wash water and rinsate collected. All non-reusable equipment and/or equipment which is not capable of being decontaminated will be containerized and disposed of as hazardous waste.

Wash Water and Rinsate

If the rinsate or other wastes generated in the clean-up process is determined to be hazardous, it will be properly disposed of as a hazardous waste; otherwise, the material will be disposed of as an industrial waste. It should be noted that wash water and rinsate will not be allowed to drain to the waterway.

EMERGENCY RESPONSE EQUIPMENT AND COMMUNICATION

Due to the small size of the facility, routine communication will be accomplished by voice communication. Emergency alarms will be available at the tank farm, return/fill shelter, and warehouse. Telephones are used in case of a spill or fire emergency to summon assistance. Emergency numbers will be posted by each phone in the office. Included with these phone numbers is the 24-hour spill number for the Corporate Environmental Department at the corporate office in Elgin, Illinois. Figure II.A.4(b)-3 provides the proposed locations of telephones, fire extinguishers, the first-aid kits, and the emergency eye washes. Other emergency response equipment (Table II.A.4(b)-3)

will be kept in a small storage area inside the warehouse near the return/fill dock. This equipment will include mops and buckets, soap, shovels, and spill sorbent pads. Rubber gloves, boots, pumps, and a wet/dry vacuum cleaner will be stored in an emergency supply area near the container storage area. Descriptions and uses of the equipment are provided in Table II.A.4(b)-4. Adequate aisle space will be provided in the container storage area for movement in an emergency situation. The City of Medley will be supplying water for domestic use, decontamination, and fire fighting. The exact water pressure and volume has not been determined at this time. The fire protection system will be installed and certified by the installation contractor in accordance with applicable fire codes.

The equipment available at the facility for emergency situations will be adequate for most cases. Large or serious emergency situations will be remediated by local emergency response teams or special emergency response or cleanup contractors. The facility will be constructed and operated in accordance with National Fire Protection Association (NFPA) standards and applicable local ordinances. Applicable health and safety standards will also be observed at the service center. A recent air quality survey conducted by an independent industrial hygienist at the Los Angeles service center has shown that air quality at a typical service center is within Threshold Limit Values (TLV) as specified by OSHA and local air pollution control criteria; no respirator or special protection unit is deemed mandatory.

FIRE CONTROL PROCEDURES

Call the Fire Department.

Center aisles are available in container storage areas to permit fire department personnel to pass with fire fighting equipment.

Act quickly with the fire extinguisher to put out the fire before it spreads.

TABLE II.A.4(b)-4

DESCRIPTION AND USES OF EMERGENCY EQUIPMENT

Item	Location	Use/Description
Gloves	Locker Room	The rubber or plastisol gloves sold by Safety-Kleen are to be used when handling the solvents.
Safety Glasses or Face Mask	Locker Room	Whichever the worker prefers is to be worn when loading or unloading solvent.
Plastic Aprons	Locker Room	For situations where a solvent may get on the worker's clothing.
Eyewash Stand	Centrally for smaller centers	The workers should operate the stand and become familiar with its operation.
Showers	Locker Room	
Fire Extinguisher	Points where solvent is transferred	An ABC extinguisher is a universal system used on paper, wood, and electrical, as well as solvent fires. The extinguishers must be full and carry an inspection tag. The accepted extinguisher is available as S-K Part No. 4009.
Absorbent Material	Loading/Unloading Area and Warehouse	An adequate supply will be on hand to handle small spills. S-K Part No. 8890 A 50-pound bag will also be kept in the warehouse to remediate and prevent the spread of large spills.

TABLE II.A.4(b)-4 - Continued

DESCRIPTION AND USES OF EMERGENCY EQUIPMENT

Item	Location	Use/Description
Portable Pumps Wet/Dry Vacuum	Warehouse	For use in picking up liquid spills in the drum containment area, or other paved areas, and to transfer materials associated with a spill.
Recovery Drums	Warehouse	Emergency storage of spilled product, cleaning fluids, or other materials associated with a spill.
Plastic	Warehouse	To be used for containment of decontamination zones.
Duct Tape	Warehouse	Taping of protective clothing, containment plastic, and other miscellaneous uses.
First-Aid Supplies	Locker Room	Minor first-aid needs and health problems.
Shovels and Mops	Warehouse	To be used to collect spills and spill residue.
Communication Equipment	Throughout the Facility	Six telephones with paging/loudspeaker systems are available in the office and warehouse for internal and external communications.
Decontamination Equipment	Warehouse	Two brushes, a box of detergent and cloth rags are available for decontamination of clean-up equipment.

Call the Police Department and local hospital (Table II.A.4(b)-1) when injury occurs, and/or the order of on-lookers and traffic is to be maintained.

AVAILABILITY AND REVISION OF THE CONTINGENCY PLAN

This plan and all revisions to the plan are kept at the facility and regularly updated throughout the operating life of the facility.

Copies of this document are provided to local authorities and organizations listed under the Preparedness and Prevention Plan, which may be called upon to provide emergency services.

This plan and all revisions to the plan are made readily available to employees working at the facility.

This plan is reviewed and updated, if necessary, whenever:

a. The facility license is modified to allow new process wastes to be stored or treated, or applicable regulations are revised;

b. The list or location of emergency equipment changes;

c. The facility changes in its design, construction, operation maintenance, or other circumstances in a way that:

   (1) Materially increase the potential for fires, explosions, or releases of hazardous waste or hazardous waste constituents, or

   (2) Changes in response necessary in an emergency.

d. The names, addresses, or phone numbers of emergency coordinators change;

e. The employee assigned to each emergency task changes, or

f. The plan fails when implemented in an emergency.

ARRANGEMENTS WITH LOCAL AUTHORITIES

Once the facility is constructed, arrangements will be made to familiarize the Police Department, Fire Department, and local emergency response teams with the layout of the facility, properties of hazardous materials handled (Material Safety Data Sheets) at the facility and associated hazards, places where facility personnel would normally be working, entrances to and roads inside the facility, and possible evacuation routes.

Potential primary and secondary spill control contractors as well as sorbent suppliers are identified in the Contingency Plan and Emergency Procedures.

Arrangements will be made to familiarize the local hospital with the properties of hazardous waste handled at the facility and the types of injuries or illnesses which would result from fires, explosions, or releases at the facility.

Appendix B includes examples of letters which will be transmitted, after the site is constructed, to local authorities for emergency response in the event of an incident where pubic health or environment is threatened.

EVACUATION PLAN

In an uncontrolled emergency, all persons are to be evacuated from the area by means of a verbal cry and assemble across from the entrance drive to the facility. Assure that all personnel are accounted for and out of the area. The emergency coordinator may elect to use a car horn as a means of emergency notification. A head count will be performed by the emergency coordinator.

The Fire Department must be notified at the time of evacuation either from a safe onsite building or neighboring facilities.

Clearly marked exits exist in warehouse and office areas.

APPENDIX A

MATERIAL SAFETY DATA SHEETS FOR KNOWN HAZARDOUS CONSTITUENTS

SAFETY-KLEEN 105 SOLVENT

MATERIAL SAFETY DATA SHEET FOR U.S.A. AND CANADA

SECTION I – PRODUCT INFORMATION

Safety-Kleen Corp. - 777 Big Timber Road - Elgin, IL, U.S.A. 60123
Safety-Kleen Canada Inc. - 3090 Blvd. Le Carrefour - Suite 300 - Chomedy Laval Quebec, Canada H7T 2J7
For Product Technical Information Call 312-694-2700 (U.S.A.);
800-363-2260 (Eastern Canada); 514-686-2040 (Western Provinces/Call Collect)

24-HOUR EMERGENCY TELEPHONE	*MEDICAL:*	*TRANSPORTATION:*
These numbers are for emergency use only. If you desire non-emergency information about this product, please call a telephone number listed above.	800-752-7869 (U.S.A.) 312-942-5969 (CANADA) RUSH POISON CONTROL CENTER CHICAGO, ILLINOIS, U.S.A.	708-888-4660 (U.S.A.) SAFETY-KLEEN ENVIRONMENT, HEALTH AND SAFETY DEPARTMENT 613-996-6666 (CANADA) CANUTEC

IDENTITY (TRADE NAME): SAFETY-KLEEN 105 SOLVENT

SYNONYMS: PETROLEUM DISTILLATES, PETROLEUM NAPHTHA, MINERAL SPIRITS, STODDARD SOLVENT

SK PART NUMBER: 6617

FAMILY/CHEMICAL NAME: HYDROCARBON SOLVENT

PRODUCT USAGE: SOLVENT FOR CLEANING AND DEGREASING PARTS

SECTION II – HAZARDOUS COMPONENTS

NAME	SYNONYM	Wt. %	CAS NO.	OSHA PEL TWA (ppm)	OSHA PEL STEL (ppm)	ACGIH TLV TWA (ppm)	ACGIH TLV STEL (ppm)	LD50[a]	LC50[b]
Parts Washer Solvent (Consists predominantly of C9-C13 Saturated Hydrocarbons)	Mineral Spirits	85.0	64741-41-9	100 **	N.Av.	100 **	N.Av.	> 5000**	3400**
C8+ Aromatics		12.0	Mixture	N.Av.	N.Av.	N.Av.	N.Av.	N.Av.	N.Av.
*Toluene		0.5	108-88-3	100	150	100	150	5000	4000
*Xylene		1.0	1330-20-7	100	150	100	150	4300	5000
*Ethyl Benzene		0.5	100-41-4	100	125	100	125	3500	4000[c]
*1,1,1 Trichloroethane	Methyl Chloroform	0-0.5***	71-55-6	350	450	350	450	10300	18000
*Perchloroethylene	Tetrachloroethylene	0-0.5***	127-18-4	25	N.Av.	50	200	2629	4000[c]
Total Chlorinated Solvents		0-1.0***							

N.Av. = Not available.
* See Section X - Other Regulatory Information
**For Stoddard Solvent
***Even though the concentration range does not fall under the ranges prescribed by WHMIS, this is the actual range which varies with each batch of the product.

[a] Oral-Rat LD50 (mg/kg)
[b] Inhalation-Rat LC50 (ppm/4 hours)
[c] Inhalation-Rat LCLo (ppm/4 hours)

SECTION III – PHYSICAL DATA

PHYSICAL STATE, APPEARANCE AND ODOR:	Combustible liquid, clear, green, with characteristic hydrocarbon odor.
ODOR THRESHOLD:	Not available.
BOILING POINT:	304–435°F (151-224°C).
VAPOR PRESSURE:	2 mm Hg at 68°F (20°C).
FREEZING POINT:	Not available.
EVAPORATION RATE:	0.1 (Butyl Acetate = 1).
VOLATILE:	99.9%
VOLATILE ORGANIC COMPOUNDS:	6.4 to 6.7 lbs/gal; 770 to 800 g/l
DENSITY:	Not available.
VAPOR DENSITY:	4.9 (Air = 1).
SOLUBILITY IN WATER:	Negligible.
pH:	Not applicable.
SPECIFIC GRAVITY:	0.77 to 0.80 at 60/60°F (16/16°C) (Water = 1).
COEFFICIENT OF WATER/OIL DISTRIBUTION:	Not available.
MOLECULAR WEIGHT:	142 (Approximately).

SECTION IV -- FIRE AND EXPLOSION HAZARD DATA

FLASH POINT:	105°F (41°C) SETA
AUTOIGNITION TEMPERATURE:	473°F (245°C).
CONDITIONS OF FLAMMABILITY:	Materials must be moderately heated before ignition can occur.
FLAMMABLE LIMITS IN AIR:	*LOWER:* 0.7 Vol. % *UPPER:* 6.0 Vol. %
UNUSUAL FIRE AND EXPLOSION HAZARDS:	Decomposition and combustion products may be toxic. Heated containers may rupture, explode or be thrown into the air. Vapors are heavier than air and may travel great distances to ignition source and flash back. Not sensitive to mechanical impact. Material may be sensitive to static discharge, which could result in fire or explosion.
EXTINGUISHING MEDIA:	Carbon dioxide, foam, dry chemical, water (mist only).
FIRE FIGHTING PROCEDURES -- SPECIAL:	NFPA 704 Rating 0-2-0 Keep storage containers cool with water spray. Use self-contained breathing apparatus (SCBA).
HAZARDOUS COMBUSTION PRODUCTS:	Thermal decomposition and burning may produce carbon monoxide.

SECTION V – REACTIVITY DATA

STABILITY: Stable under normal temperatures and pressures, and not reactive with water.

INCOMPATIBILITY (MATERIALS AND CONDITIONS TO AVOID): Avoid oxidizing agents, flames, sparks and high temperatures.

HAZARDOUS POLYMERIZATION: Not known to occur under normal temperatures and pressures.

HAZARDOUS DECOMPOSITION PRODUCTS: Normally none.

SECTION VI – HEALTH HAZARD DATA AND TOXICOLOGICAL PROPERTIES

PRIMARY ROUTES OF EXPOSURE: Eye and skin contact; inhalation.

EXPOSURE LIMITS: See Section II.

SIGNS AND SYMPTOMS OF EXPOSURE:

ACUTE:

Eyes: Contact may cause slight to moderate irritation. High vapor concentrations (> 500 ppm) are irritating to the eyes.

Skin: Prolonged or repeated contact tends to remove skin oils, possibly leading to irritation and dermatitis. No significant skin absorption hazard.

Inhalation (Breathing): High concentrations of vapor or mist may be irritating to the respiratory tract, cause headaches, dizziness, nausea, impaired coordination, anesthesia and may have other central nervous system effects.

Ingestion (Swallowing): Low order of acute oral toxicity. May cause irritation of the throat, nausea, vomiting and symptoms of central nervous system depression. Aspiration into the lungs during ingestion or vomiting may cause mild to severe pulmonary injury and possibly death.

CHRONIC: Prolonged and/or repeated skin contact may cause drying and cracking or dermatitis.

MEDICAL CONDITIONS AGGRAVATED BY EXPOSURE: Individuals with pre-existing central nervous system dysfunction may have increased susceptibility to the effects of exposure. Contact with skin may aggravate pre-existing dermatitis.

CARCINOGENICITY: IARC classifies chemicals by their carcinogenic risk, including agents that are known, probable, or possible carcinogens. NTP classifies chemicals as either known carcinogens or for which there is a limited evidence of carcinogenicity in humans or sufficient evidence of carcinogenicity in experimental animals.

Perchloroethylene is listed by IARC as a possible carcinogen and is classified by NTP as having limited evidence of carcinogenicity in humans or sufficient evidence of carcinogenicity in experimental animals.

OTHER POTENTIAL HEALTH HAZARDS: The following information is required by Canadian WHMIS regulations. Irritancy is covered in Signs and Symptoms of Exposure in Section VI. There is no known human sensitization or toxicologically synergistic product. Xylene has demonstrated experimental effects for reproductive toxicity, mutagenicity and teratogenicity. Studies indicate Ethylbenzene and 1,1,1-Trichloroethane are experimental teratogens.

SECTION VII -- EMERGENCY AND FIRST AID PROCEDURES

EYES: For direct contact, flush eyes with water for 15 minutes lifting upper and lower lids occasionally. If irritation or redness from exposure to vapors or mists develops, move victim away from exposure into fresh air. Consult physician if irritation or pain persists.

SKIN: Remove contaminated clothing. Wash skin twice with soap and water. If irritation or pain develops and persists, consult a physician.

INHALATION: (Breathing)	Remove to fresh air immediately. Use oxygen if there is difficulty breathing or artificial respiration if breathing has stopped. Do not leave victim unattended. Seek immediate medical attention if necessary.
INGESTION: (Swallowing)	If conscious, drink 4 to 8 ounces of water and seek immediate medical attention. DO NOT induce vomiting.

SECTION VIII – PRECAUTIONS FOR SAFE USE AND HANDLING AND PREVENTIVE MEASURES

SPILL PROCEDURES:	Remove all ignition sources. Ventilate area and avoid breathing vapors. For large spills, isolate area and deny entry. If possible, contain as a liquid for possible re-refining. Absorb with compatible absorbent material. Shovel into closable container for disposal. Wear protective equipment specified in Section IX. Contain away from surface waters and sewers.
WASTE DISPOSAL METHODS:	Dispose in accordance with Federal, State, Provincial and local regulations. Contact Safety-Kleen regarding recycling or proper disposal.
HANDLING PRECAUTIONS:	Avoid contact with eyes, skin or clothing. Use in well ventilated area and avoid breathing vapors or mists. Keep away from heat, sparks and flames.
SHIPPING AND STORING PRECAUTIONS:	Keep container tightly closed when not in use and during transport. Empty product containers may contain product residue. Do not pressurize, cut, heat, weld, grind or expose containers to flame or other sources of ignition.
PERSONAL HYGIENE:	Use good personal hygiene. Wash thoroughly with soap and water after handling and before eating, drinking or using tobacco products. Launder contaminated clothing and clean protective equipment before reuse.

SECTION IX – CONTROL MEASURES AND OTHER PREVENTIVE MEASURES

EYE PROTECTION:	Where there is likelihood of spill or splash, wear chemical goggles and faceshield. Contact lenses should not be worn.
PROTECTIVE GLOVES:	Use nitrile or neoprene gloves to prevent contact with skin.
RESPIRATORY PROTECTION:	Use NIOSH/MSHA-approved respiratory protective equipment when concentration of vapors or mists exceeds applicable exposure limit. Depending on the airborne concentration, use a respirator or gas mask with appropriate cartridges and canisters. A self-contained breathing apparatus (SCBA) is required for large spills and emergencies. Selection and use of respiratory protective equipment should be in accordance in the U.S.A. with OSHA General Industry Standard 29 CFR 1910.134 and in Canada with CSA Standard Z94.4-M1982.
ENGINEERING CONTROLS:	Provide local exhaust or general dilution ventilation needed to maintain concentrations of vapors or mists below applicable exposure limits. Where explosive mixtures may be present, systems safe for such locations should be used.
OTHER PROTECTIVE EQUIPMENT:	Wear appropriate solvent-resistant boots, apron or other protective clothing where spills and splashes are possible. A source of clean water should be available in work areas for flushing the eyes and skin.

SECTION X – OTHER REGULATORY INFORMATION

DOT PROPER SHIPPING NAME:	PETROLEUM NAPHTHA
DOT CLASS:	COMBUSTIBLE LIQUID
DOT ID NUMBER:	UN1255

SARA TITLE III:

Product contains toxic chemicals subject to the reporting requirements of Section 313 of Title III of the Superfund Amendments and Reauthorization Act of 1986 and 40 CFR Part 372. Toxic constituents are listed with an asterisk in Section II of this Material Safety Data Sheet.

Product poses the following physical and/or health hazards as defined in 40 CFR 370.3 (Sections 311, 312 of SARA Title III):

Immediate (Acute) Health Hazard
Delayed (Chronic) Health Hazard
Fire Hazard

TDGA:

NAPHTHA, PETROLEUM
CLASS 3.3, UN1255, P.G. III

WHMIS CLASSIFICATION:

Class B3, Combustible Liquid;
Class D2A, Other Toxic Effects, Very Toxic Material;
Class D2B, Other Toxic Effects, Toxic Material

SECTION XI -- PREPARATION INFORMATION

PREPARED BY: Product MSDS Coordinator

FORM PART NO. 82310

ORIGINAL ISSUE DATE: July 20, 1989 *REVISED:* December 14, 1990 *SUPERSEDES:* March 12, 1990

PERCHLOROETHYLENE

MATERIAL SAFETY DATA SHEET FOR U.S.A. AND CANADA

SECTION 1 -- PRODUCT INFORMATION

Safety-Kleen Corp. - 777 Big Timber Road - Elgin, IL, U.S.A. 60123
Safety-Kleen Canada Inc. - 3090 Blvd. Le Carrefour - Suite 300 - Chomedy Laval Quebec, Canada H7T 2J7
For Product Technical Information Call 312-694-2700 (U.S.A.);
800-363-2260 (Eastern Canada); 514-686-2040 (Western Provinces/Call Collect)

24-HOUR EMERGENCY TELEPHONE	*MEDICAL:*	*TRANSPORTATION:*
These numbers are for emergency use only. If you desire non-emergency information about this product, please call a telephone number listed above.	800-752-7869 (U.S.A.) 312-942-5969 (CANADA) RUSH POISON CONTROL CENTER CHICAGO, ILLINOIS, U.S.A.	708-888-4660 (U.S.A.) SAFETY-KLEEN ENVIRONMENT, HEALTH AND SAFETY DEPARTMENT 613-996-6666 (CANADA) CANUTEC

IDENTITY (TRADE NAME): PERCHLOROETHYLENE

SYNONYMS: TETRACHLOROETHYLENE

SK PART NUMBER: 775, 10778, 30778

FAMILY/CHEMICAL NAME: CHLORINATED HYDROCARBON

PRODUCT USAGE: DRY CLEANING SOLVENT

MSDS FORM PART NO.: 82342

SECTION 2 -- HAZARDOUS COMPONENTS

NAME	SYNONYM	Wt. %	CAS NO.	OSHA PEL TWA ppm	OSHA PEL STEL ppm	ACGIH TLV TWA ppm	ACGIH TLV STEL ppm	LD50[a]	LC50[b]
*Perchloroethylene	Tetrachloroethylene	99.5-100	127-18-4	25	N.Av.	50	200	2629	34200

N.Av. = Not Available
*See Section 10-Other Regulatory Information

[a]Oral-Rat LD50 (mg/kg)
[b]Inhalation-Rat LC50 (mg/m^3/8 hours)

SECTION 3 -- PHYSICAL DATA

PHYSICAL STATE, APPEARANCE AND ODOR: Clear, colorless, liquid with a mild ether-like odor.

ODOR THRESHOLD: 50ppm (For Perchloroethylene).

BOILING POINT: 250°F (121°C) (For Perchloroethylene).

VAPOR PRESSURE: 14mm Hg at 68°F (20°C) (For Perchloroethylene).

FREEZING POINT: -7.6°F (-22°C) (For Perchloroethylene).

EVAPORATION RATE: 2.3 (Butyl Acetate = 1) (For Perchloroethylene).

VOLATILE: 100%

VOLATILE ORGANIC COMPOUNDS: 13.5 lbs/gal; 1623 g/l

DENSITY: 13.5 lbs/gal (For Perchloroethylene).

VAPOR DENSITY:	5.7 (Air = 1) (For Perchloroethylene).
SOLUBILITY IN WATER:	Slight (For Perchloroethylene).
pH:	7-10
SPECIFIC GRAVITY:	1.623 (Water = 1) (For Perchloroethylene).
COEFFICIENT OF WATER/OIL DISTRIBUTION:	Not available.
MOLECULAR WEIGHT:	165.8 (For Perchloroethylene).

SECTION 4 -- FIRE AND EXPLOSION HAZARD DATA

FLASH POINT:	Not applicable.
AUTOIGNITION TEMPERATURE:	Not applicable.
CONDITIONS OF FLAMMABILITY:	Heat, sparks and flame.
FLAMMABLE LIMITS IN AIR:	*LOWER:* Not applicable. *UPPER:* Not applicable.
UNUSUAL FIRE AND EXPLOSION HAZARDS:	Decomposition and combustion products may be toxic. Heated containers may rupture, explode or be thrown into the air. Not sensitive to mechanical impact or static discharge.
EXTINGUISHING MEDIA:	Carbon dioxide, dry chemical.
FIRE FIGHTING PROCEDURES -- SPECIAL:	Perchloroethylene NFPA 704 Rating 2-0-0 Keep storage containers cool with water spray. Use self-contained breathing apparatus (SCBA).
HAZARDOUS COMBUSTION PRODUCTS:	Thermal decomposition and burning may produce phosgene, chloride fumes and carbon monoxide.

SECTION 5 -- REACTIVITY DATA

STABILITY:	Stable under normal temperatures and pressures, and not reactive with water.
INCOMPATIBILITY (MATERIALS AND CONDITIONS TO AVOID):	Avoid alkalies. May form explosive mixtures with metals and alkaline materials.
HAZARDOUS POLYMERIZATION:	Not known to occur under normal temperatures and pressures.
HAZARDOUS DECOMPOSITION PRODUCTS:	None under normal temperatures and pressures. However, thermal decomposition may produce phosgene chloride fumes and carbon monoxide.

SECTION 6 -- HEALTH HAZARD DATA AND TOXICOLOGICAL PROPERTIES

PRIMARY ROUTES OF EXPOSURE:	Eye and skin contact; inhalation.
EXPOSURE LIMITS:	See Section 2.

SIGNS AND SYMPTOMS OF EXPOSURE:

ACUTE: *Eyes:* Contact may cause slight to moderate irritation.

Skin: Prolonged or repeated contact tends to remove skin oils, possibly leading to irritation and dermatitis. No significant skin absorption hazard.

Inhalation (Breathing): High concentrations of vapor or mist may be irritating to the respiratory tract, cause headaches, dizziness, nausea, impaired coordination, anesthesia and may have other central nervous system effects.

Ingestion (Swallowing): May cause irritation of the throat, nausea, vomiting and symptoms of central nervous system depression. Aspiration into the lungs during ingestion or vomiting may cause mild to severe pulmonary injury and possibly death.

CHRONIC: Repeated or prolonged exposure may cause conjunctivitis. Prolonged and/or repeated skin contact may cause drying and cracking or dermatitis. Repeated inhalation may cause respiratory tract irritation, central nervous system depression, liver and kidney damage.

MEDICAL CONDITIONS AGGRAVATED BY EXPOSURE: Individuals with pre-existing skin, eye, liver, kidney, cardiovascular or central nervous system dysfunction may have increased susceptibility to the effects of exposure. Contact with skin may aggravate pre-existing dermatitis.

CARCINOGENICITY: IARC classifies chemicals by their carcinogenic risk, including agents that are known, probable or possible carcinogens. NTP classifies chemicals as either known carcinogens or for which there is a limited evidence of carcinogenicity in humans or sufficient evidence of carcinogenicity in experimental animals.

Perchloroethylene is listed by IARC as a possible carcinogen. Perchloroethylene is classified by NTP as having limited evidence of carcinogenicity in humans or sufficient evidence of carcinogenicity in experimental animals.

Also see Section 10.

OTHER POTENTIAL HEALTH HAZARDS: The following information is required by Canadian WHMIS regulations. Irritancy is covered in Signs and Symptoms of Exposure in Section 6. There is no known human sensitization, toxicologically synergistic product, reproductive toxicity, mutagenicity, or teratogenicity associated with this product.

SECTION 7 -- EMERGENCY AND FIRST AID PROCEDURES

EYES: For direct contact, flush eyes with water for 15 minutes lifting upper and lower lids occasionally. If irritation or redness from exposure to vapors or mists develops, move victim away from exposure into fresh air. Consult physician if irritation or pain persists.

SKIN: Remove contaminated clothing and shoes. Wash skin twice with soap and water. Consult physician if irritation or pain persists.

INHALATION: (Breathing) Remove to fresh air immediately. Use oxygen if there is difficulty breathing or artificial respiration if breathing has stopped. Do not leave victim unattended. Seek immediate medical attention if necessary.

INGESTION: (Swallowing) If conscious, drink 4 to 8 ounces of water and seek immediate medical attention. DO NOT induce vomiting.

SECTION 8 -- PRECAUTIONS FOR SAFE USE AND HANDLING AND PREVENTIVE MEASURES

SPILL PROCEDURES: Remove all ignition sources. Ventilate area and avoid breathing vapors. For large spills, isolate area and deny entry. If possible, contain as a liquid for possible re-refining. Absorb with compatible absorbent material. Shovel into closable container for disposal. Wear protective equipment specified in Section 9. Contain away from surface waters and sewers.

WASTE DISPOSAL METHODS: Dispose in accordance with federal, state, provincial and local regulations. Contact Safety-Kleen regarding recycling or proper disposal.

HANDLING PRECAUTIONS: Avoid contact with eyes, skin, clothing or shoes. Use in well ventilated area and avoid breathing vapors or mists. Keep away from heat, sparks and flames.

SHIPPING AND STORING PRECAUTIONS: Keep container tightly closed when not in use and during transport. Empty product containers may contain product residue. Do not pressurize, cut, heat, weld, grind or expose containers to flame or other sources of ignition. See Section 10 for Packing Group information.

PERSONAL HYGIENE: Use good personal hygiene. Wash thoroughly with soap and water after handling and before eating, drinking or using tobacco products. Clean contaminated clothing, shoes and protective equipment before reuse.

SECTION 9 -- CONTROL MEASURES AND OTHER PREVENTIVE MEASURES

EYE PROTECTION:	Where there is likelihood of spill or splash, wear chemical goggles and faceshield. Contact lenses should not be worn.
PROTECTIVE GLOVES:	Use polyvinyl alcohol, Teflon or Viton® gloves to prevent contact with skin.
RESPIRATORY PROTECTION:	Use NIOSH/MSHA-approved respiratory protective equipment when concentration of vapors or mists exceeds applicable exposure limit. Depending on the airborne concentration, use a full-face respirator or gas mask with appropriate cartridges and canisters. A self-contained breathing apparatus (SCBA) is required for large spills and emergencies. Selection and use of respiratory protective equipment should be in accordance in the U.S.A. with OSHA General Industry Standard 29 CFR 1910.134 and in Canada with CSA Standard Z94.4-M1982.
ENGINEERING CONTROLS:	Provide local exhaust or general dilution ventilation needed to maintain concentrations of vapors or mists below applicable exposure limits. Where explosive mixtures may be present, systems safe for such locations should be used.
OTHER PROTECTIVE EQUIPMENT:	Wear appropriate solvent-resistant boots, apron or other protective clothing where spills and splashes are possible. A source of clean water should be available in work areas for flushing the eyes and skin.

SECTION 10 -- OTHER REGULATORY INFORMATION

DOT PROPER SHIPPING NAME:	TETRACHLOROETHYLENE
DOT CLASS:	Class 6.1
DOT ID NUMBER:	UN1897, Packing Group III (Reportable Quantity = 100 lbs/container)
SARA TITLE III:	Product contains a toxic chemical subject to the reporting requirements of Section 313 of Title III of the Superfund Amendments and Reauthorization Act of 1986 and 40 CFR Part 372. Toxic constituent is listed with an asterisk in Section 2 of this Material Safety Data Sheet. Product poses the following physical and/or health hazards as defined in 40 CFR 370.3 (Sections 311, 312 of SARA Title III): Immediate (Acute) Health Hazard Delayed (Chronic) Health Hazard
CALIFORNIA:	This product contains detectable amounts of Perchloroethylene CAS No. 127-18-4 and Trichloroethylene CAS No. 79-01-6. These materials are listed by the State of California as known carcinogens.
TDGA:	Tetrachloroethylene, Class 6.1, UN1897, Packing Group III
WHMIS CLASSIFICATION:	D1B (Poisonous and Infectious Materials, Immediate and Serious Toxic Effects, Toxic Material); D2A (Poisonous and Infectious Materials, Other Toxic Effects, Very Toxic Material); D2B (Poisonous and Infectious Materials, Other Toxic Effects, Toxic Material)

SECTION 11 -- PREPARATION INFORMATION

PREPARED BY: Product MSDS Coordinator

REVISED: March 20, 1991

ORIGINAL ISSUE DATE: July 20, 1989

SUPERSEDES: December 1, 1989

SAFETY-KLEEN 140 SOLVENT-MS

MATERIAL SAFETY DATA SHEET

SECTION I -- PRODUCT INFORMATION

Safety-Kleen Corporation - 777 Big Timber Road - Elgin, IL 60123
For Product/Sales Information Call 708/697-8460

EMERGENCY TELEPHONE	*MEDICAL:*	*TRANSPORTATION:*
These numbers are for emergency use only. If you desire non-emergency information about this product, please call the telephone number listed above.	800/942-5969 or 312/942-5969 RUSH POISON CONTROL CENTER CHICAGO, ILLINOIS (24 HOURS)	800/424-9300 CHEMTREC

IDENTITY (TRADE NAME): SAFETY-KLEEN 140 SOLVENT-MS

SYNONYMS: PETROLEUM DISTILLATES, PETROLEUM NAPHTHA

SK PART NUMBER: 6616

FAMILY/CHEMICAL NAME: HYDROCARBON SOLVENT

PRODUCT USAGE: SOLVENT FOR CLEANING AND DEGREASING PARTS

SECTION II -- HAZARDOUS COMPONENTS

NAME	SYNONYM	%	CAS NO.	OSHA PEL (ppm)	ACGIH TLV (ppm)
Mineral Spirits	Petroleum Distillates	99.9	64742-88-7	100 (Stoddard Solvent)	100 (Stoddard Solvent)
*Dye (contains Xylene)		.003	1330-20-7	100 150 STEL	100 150 STEL
*Anti-Static Agent (contains Xylene)		0.0001	1330-20-7	100 150 STEL	100 150 STEL

* See Section X - Other Regulatory Information

SECTION III -- PHYSICAL DATA

PHYSICAL STATE, APPEARANCE AND ODOR: Combustible liquid - clear, green, with characteristic hydrocarbon odor.

BOILING POINT: 360 - 400 F

MELTING POINT: Not Available

EVAPORATION RATE: (Butyl Acetate = 1) 0.08

PERCENT VOLATILE: 99.9%

VAPOR DENSITY: 5.48 (Air = 1)

VAPOR PRESSURE: 0.5 mm of Hg at 68 F

SOLUBILITY IN WATER: Negligible

pH: Not Applicable

SPECIFIC GRAVITY: 0.770 to 0.811

MOLECULAR WEIGHT: Approximately 142

VOLATILE ORGANIC COMPOUNDS: 770 g/L

SECTION IV -- FIRE AND EXPLOSION HAZARD DATA

FLASH POINT: 140 F (TCC)

AUTOIGNITION TEMPERATURE: 473 F

CONDITIONS OF FLAMMABILITY: Materials must be moderately heated before ignition can occur.

FLAMMABLE LIMITS IN AIR - LOWER: 1.0% *UPPER:* 7.0%

EXTINGUISHING MEDIA: Carbon dioxide, foam, dry chemical, water (mist only).

FIRE FIGHTING PROCEDURES -- SPECIAL: NFPA 704 Rating 0-2-0

Keep storage tanks cool with water spray. Use self-contained breathing apparatus (SCBA).

UNUSUAL FIRE AND EXPLOSION HAZARDS:

Decomposition and combustion products may be toxic. Heated tanks may rupture, explode or be thrown into the air. Vapors are heavier than air and may travel great distances to ignition source and flashback.

HAZARDOUS COMBUSTION PRODUCTS:

Thermal decomposition and burning may produce carbon monoxide.

SECTION V -- REACTIVITY DATA

STABILITY: Normally stable even under fire exposure conditions and is not reactive with water. Normal firefighting procedures may be used.

INCOMPATIBILITY (CONDITIONS TO AVOID): Strong oxidizing agents (e.g. chlorine, peroxides, strong acids).

HAZARDOUS POLYMERIZATION: Not known to occur under normal conditions.

HAZARDOUS DECOMPOSITION PRODUCTS: Normally none; however, incomplete burning may yield carbon monoxide.

SECTION VI -- HEALTH HAZARD DATA

PRIMARY ROUTES OF EXPOSURE: Skin and eye contact; inhalation.

HEALTH HAZARD DATA/SIGNS AND SYMPTOMS OF EXPOSURE:

ACUTE: *Skin:* Prolonged or repeated contact tends to remove skin oils, possibly leading to irritation and dermatitis. No significant skin absorption hazard.

Eyes: Contact may cause slight to moderate irritation. High vapor concentrations (> 500 ppm) are irritating to the eyes.

Inhalation: High concentrations of vapor or mist may be irritating to the respiratory tract, cause headaches, dizziness, nausea, impaired coordination, anesthesia anesthetic and may have other central nervous system effects.

Ingestion: Low order of acute oral toxicity. May cause irritation of the throat, nausea, vomiting and symptoms of central nervous system depression. Aspiration into the lungs during ingestion or vomiting may cause mild to severe pulmonary injury and possibly death.

CHRONIC: Prolonged and/or repeated contact may cause drying and cracking of the skin or dermatitis.

OTHER POTENTIAL HEALTH HAZARDS: None Known

MEDICAL CONDITIONS AGGRAVATED BY EXPOSURE: Individuals with pre-existing central nervous system dysfunction may have increased susceptibility to the effects of exposure. Contact with skin may aggravate pre-existing dermatitis.

CARCINOGENICITY: None of the ingredients are known or suspected carcinogens.

SECTION VII -- EMERGENCY AND FIRST AID PROCEDURES

EYES: For direct contact, flush eyes with water for 15 minutes lifting upper and lower lids occasionally. Consult physician if irritation or pain persists. If irritation or redness from exposure to vapors or mists develop, move victim away from exposure into fresh air.

SKIN: Remove contaminated clothing. Wash skin twice with soap and water. If irritation develops and persists, consult a physician.

INGESTION: If conscious, dilute with 4 to 8 ounces of water and seek immediate medical attention. DO NOT induce vomiting.

INHALATION: Remove to fresh air immediately. Use oxygen if there is difficulty breathing or artificial respiration if respiration has stopped. Do not leave victim unattended. Seek immediate medical attention if necessary.

SECTION VIII -- PRECAUTIONS FOR SAFE USE AND HANDLING

SPILL PROCEDURES: Remove all ignition sources. Ventilate area and avoid breathing vapors. For large spills, isolate area and deny entry. If possible, contain as a liquid for possible re-refining. Absorb onto sand or other absorbent material. Shovel into closable container for disposal. Wear protective equipment specified below. Contain away from surface waters and sewers.

WASTE DISPOSAL METHODS: Dispose in accordance with Federal, State, and local regulations. Contact Safety-Kleen regarding recycling.

HANDLING PRECAUTIONS: Avoid contact with eyes, skin or clothing. Use in well ventilated area and avoid breathing vapors or mists. Keep away from heat, sparks and open flames.

SHIPPING AND STORING PRECAUTIONS: Empty product containers may contain product residue. Do not pressurize, cut, heat, weld, grind or expose containers to flame or other sources of ignition. Keep container tightly closed when not in use and during transport.

PERSONAL HYGIENE: Use good personal hygiene. Wash thoroughly with soap and water after handling and before eating, drinking or using tobacco products. Launder contaminated clothing and clean protective equipment before reuse.

SECTION IX -- CONTROL MEASURES

VENTILATION: Provide local exhaust or general dilution ventilation as determined necessary to maintain concentrations of vapors or mists below applicable exposure limits. Where explosive mixtures may be present, systems safe for such locations should be used.

PROTECTIVE GLOVES: Use nitrile or neoprene gloves to prevent contact with skin.

EYE PROTECTION: Where there is likelihood of spill or splash, wear chemical goggles or faceshield. Contact lenses should not be worn.

RESPIRATORY PROTECTION: Use NIOSH-approved respiratory protective equipment when concentration of vapors or mists exceeds applicable exposure limit. Depending on the airborne concentration, use a respirator or gas mask with appropriate cartridges and canisters (for organic vapor with mist prefilter). A self-contained breathing apparatus (SCBA) is required for large spills and emergencies. Selection and use of respiratory protective equipment should be in accordance with OSHA General Industry Standard 29 CFR 1910.134 - Respiratory Protection.

OTHER PROTECTIVE EQUIPMENT: Wear solvent-resistant boots, apron or other protective clothing where spills and splashes are possible. A source of clean water should be available in work areas for flushing the eyes and skin.

SECTION X -- OTHER REGULATORY INFORMATION

DOT PROPER SHIPPING NAME: Petroleum Naphtha

DOT CLASS: Combustible Liquid

DOT NUMBER: UN 1255

SARA TITLE III: Product does not contain a toxic chemical or chemicals subject to the reporting requirements of Section 313 of Title III of the Superfund Amendments and Reauthorization Act of 1986 and 40 CFR Part 372.

Product poses the following physical and/or health hazard(s) as defined in 40 CFR 370.3 (Sections 311, 312 of SARA Title III):

Immediate (Acute) Health Hazard
Delayed (Chronic) Health Hazard
Fire Hazard

SECTION XI -- PREPARATION INFORMATION

PREPARED BY: SK Product Review Committee *FORM NO.* 82418 (was 900-14-004)

ORIGINAL ISSUE DATE: July 20, 1989 *REVISED:* December 1, 1989 *SUPERSEDES:* July 20, 1989

HEAVY DUTY LACQUER THINNER

MATERIAL SAFETY DATA SHEET FOR U.S.A. AND CANADA

SECTION I -- PRODUCT INFORMATION

Safety-Kleen Corp. - 777 Big Timber Road - Elgin, IL, U.S.A. 60123
Safety-Kleen Canada Inc. - 3090 Blvd. Le Carrefour - Suite 300 - Chomedy Laval Quebec, Canada H7T 2J7
For Product Technical Information Call 312-694-2700 (U.S.A.);
800-363-2260 (Eastern Canada); 514-686-2040 (Western Provinces/Call Collect)

24-HOUR EMERGENCY TELEPHONE	*MEDICAL:*	*TRANSPORTATION:*
These numbers are for emergency use only. If you desire non-emergency information about this product, please call a telephone number listed above.	800-752-7869 (U.S.A.) 312-942-5969 (CANADA) RUSH POISON CONTROL CENTER CHICAGO, ILLINOIS, U.S.A.	708-888-4660 (U.S.A.) SAFETY-KLEEN ENVIRONMENT, HEALTH AND SAFETY DEPARTMENT 613-996-6666 (CANADA) CANUTEC

IDENTITY (TRADE NAME): HEAVY DUTY LACQUER THINNER

SYNONYMS: NONE

SK PART NUMBER: 5820, 5825, 15820, 15825, 95825

FAMILY/CHEMICAL NAME: NONE

PRODUCT USAGE: LACQUER THINNER

SECTION II -- HAZARDOUS COMPONENTS

NAME	SYNONYM	Wt. %	CAS NO.	OSHA PEL TWA ppm	OSHA PEL STEL ppm	ACGIH TLV TWA ppm	ACGIH TLV STEL ppm	LD50[a]	LC50[b]
*Toluene	Methyl benzene	9.6-62.7**	108-88-3	100	150	100	150	5000	4000[c]
*Xylene	Dimethyl benzene	0-10.4**	1330-20-7	100	150	100	150	4300	5000
*Ethyl benzene	Phenylethane	0-10.4**	100-41-4	100	125	100	125	3500	4000[c]
*Acetone	Dimethyl ketone	0-19.2**	67-64-1	750	1000	750	1000	5800	50100[c]
*Methyl ethyl ketone	MEK	9.8-39.3**	78-93-3	200	300	200	300	2737	23500[c]
Ethyl acetate	Acetic ether	0-18.4**	141-78-6	400	N.Av.	400	N.Av.	5620	1600[d]
Methyl propyl ketone	2-Pentanone	0-29.5**	107-87-9	200	250	200	250	3730	2000
*Methyl isobutyl ketone	4-Methyl-2-pentanone	0-29.5**	108-10-1	50	75	50	75	2080	3000
Isobutyl acetate	2-Methyl propyl acetate	0-18.4**	110-19-0	150	N.Av.	150	N.Av.	13400	3000[c]
N-Butyl acetate	Butyl ethanoate	0-18.4**	122-86-4	150	200	150	200	13100	[illegible]
Propylene glycol methyl ether acetate	1-Methoxy-2-propanol acetate	[illegible]	[illegible]	N.Av.	N.Av.	N.Av.	N.Av.	[illegible]	[illegible]
*Methyl alcohol	Methanol	3-2.9**	67-56-1	200 (Skin)	250 Skin)	200 (Skin)	250 (Skin)	5628	[illegible]
Ethyl alcohol	Ethanol	0-9.6**	64-17-5	1000	N.Av.	1000	N.Av.	7060	[illegible]
Isopropyl alcohol	Isopropanol	0-9.6**	67-63-0	400	500	400	500	5045	16000[c]

*N-Butyl alcohol	Butanol	0-9.6**	71-36-3	50 (Skin) (Ceiling)	N.Av.	50 (Skin) (Ceiling)	N.Av.	790	8000
C5 to C8 Aliphatic hydrocarbons	N.Av.	0-42.1**	109-66-0[c]	600[c]	750[c]	600[c]	750[c]	N.Av.[c]	325[c,l]
C5 to C20 Aliphatic hydrocarbons	N.Av.	0-9.6**	64741-41-9[d]	100[d]	N.Av.	100[d]	N.Av.	>5000[d]	N.Av.
*1,1,1-Trichloroethane	Methyl chloroform	0-1.0**	71-55-6	350	450	350	450	10300	18000
*Methylene chloride	Dichloromethane	0-1.0**	75-09-2	500	2000[m]	50	174	1600	88000[k]
*Perchloroethylene	Tetrachloro-ethylene	0-1.0**	127-18-4	25	N.Av.	50	200	2629	34200[f]
Total chlorinated compounds		0-1.0**							

N.Av. = Not Available
*See Section X-Other Regulatory Information
**Even though the concentration range does not fall under the ranges prescribed by WHMIS, this is the actual range which varies with each batch of the product.

[a]Oral-Rat LD50 (mg/kg)
[b]Inhalation-Rat LC50 (ppm/4 hours)
[c]For Pentane
[d]For Stoddard Solvent
[e]Inhalation-Rat LCLo (ppm/4 hours)
[f]Inhalation-Rat LC50 (mg/m^3/8 hours)
[g]Inhalation-Rat LC50 (ppm/8 hours)
[i]Inhalation-Rat LC50 (ppm/6 hours)
[j]Inhalation-Rat LC50 (ppm/10 hours)
[k]Inhalation-Rat LC50 (mg/m^3/30 minutes)
[l]Inhalation-Mus LCLo (gm/m^3/2 hours)
[m]5 minutes in any 2 hours

SECTION III -- PHYSICAL DATA

PHYSICAL STATE, APPEARANCE AND ODOR:	Clear, colorless liquid with a solvent odor.
ODOR THRESHOLD:	Not available.
BOILING POINT:	133°F to 342°F (56°C to 172°C) (based on a similar UNOCAL® product) (Approximately).
VAPOR PRESSURE:	94.7 mm Hg at 68°F (20°C) (based on a similar UNOCAL® product) (Approximately).
FREEZING POINT:	-200°F to -8°F (-129°C to -22°C) (Approximately).
EVAPORATION RATE:	3.7 (Butyl Acetate = 1) (based on a similar UNOCAL® product) (Approximately).
VOLATILE:	100%
VOLATILE ORGANIC COMPOUNDS:	6.9 lbs/gal; 830 g/l
DENSITY:	6.9 lbs/gal
VAPOR DENSITY:	2.2 to 3.9 (Air = 1) (Approximately).
SOLUBILITY IN WATER:	Partial.
pH	Not applicable.
SPECIFIC GRAVITY:	0.83 (Water = 1).
COEFFICIENT OF WATER/OIL DISTRIBUTION:	Not available.
MOLECULAR WEIGHT:	65 to 114 (Approximately).

SECTION IV -- FIRE AND EXPLOSION HAZARD DATA

FLASH POINT:	<100°F (<37°C) Tag Closed Cup

AUTOIGNITION TEMPERATURE:	Not available.
CONDITIONS OF FLAMMABILITY:	Heat, sparks and flame.
FLAMMABLE LIMITS IN AIR:	*LOWER:* 1.0 Vol.% (based on a similar UNOCAL® product) (Approximately). *UPPER:* 13.2 Vol.% (based on a similar UNOCAL® product) (Approximately).
UNUSUAL FIRE AND EXPLOSION HAZARDS:	Decomposition and combustion products may be toxic. Heated containers may rupture, explode or be thrown into the air. Vapors are heavier than air and may travel great distances to ignition source and flash back. Not sensitive to mechanical impact. Material may be sensitive to static discharge, which could result in fire or explosion.
EXTINGUISHING MEDIA:	Carbon dioxide, foam, dry chemical, water (mist only).
FIRE FIGHTING PROCEDURES -- SPECIAL:	NFPA 704 Rating 2-3-0 Product could float on water and spread fire. Keep storage containers cool with water spray. Use self-contained breathing apparatus (SCBA).
HAZARDOUS COMBUSTION PRODUCTS:	Thermal decomposition and burning may produce carbon monoxide.

SECTION V -- REACTIVITY DATA

STABILITY:	Stable under normal temperatures and pressures, and not reactive with water.
INCOMPATIBILITY (MATERIALS AND CONDITIONS TO AVOID):	Avoid acids, alkalies, oxidizing agents, heat, sparks and flame.
HAZARDOUS POLYMERIZATION:	Not known to occur under normal temperatures and pressures.
HAZARDOUS DECOMPOSITION PRODUCTS:	None under normal temperatures and pressures. Thermal decomposition may produce carbon monoxide.

SECTION VI -- HEALTH HAZARD DATA AND TOXICOLOGICAL PROPERTIES

PRIMARY ROUTES OF EXPOSURE: Eye and skin contact; inhalation.

EXPOSURE LIMITS: See Section II.

SIGNS AND SYMPTOMS OF EXPOSURE:

ACUTE: *Eyes:* Contact may cause severe irritation. Vapors may cause noticeable redness, tearing, irritation and pain.

Skin: Prolonged or repeated contact tends to remove skin oils, possibly leading to irritation and dermatitis. No significant skin absorption hazard.

Inhalation (Breathing): Vapor or mist can be irritating to the respiratory tract, cause headaches, dizziness, confusion, nausea, vomiting, impaired coordination, anesthesia and may have other central nervous system effects, including unconsciousness in extreme cases.

Ingestion (Swallowing): Can cause burning of the mouth, throat and abdomen, nausea, vomiting, diarrhea, symptoms of central nervous system depression, including weakness, dizziness, slow and shallow respiration, unconsciousness and convulsions. Aspiration into the lungs during ingestion or vomiting may cause mild to severe pulmonary injury and possibly death.

CHRONIC:	Conjunctivitis may occur upon chronic exposure. Prolonged and/or repeated skin contact may cause drying and cracking or dermatitis and inhalation may cause damage to the liver, kidney, spleen, lungs or nervous system.
MEDICAL CONDITIONS AGGRAVATED BY EXPOSURE:	Individuals with pre-existing liver, kidney, spleen, lungs or nervous system dysfunction may have increased susceptibility to the effects of exposure. Contact with skin may aggravate pre-existing dermatitis.

CARCINOGENICITY: IARC classifies chemicals by their carcinogenic risk, including agents that are known, probable or possible carcinogens. NTP classifies chemicals as either known carcinogens or for which there is a limited evidence of carcinogenicity in humans or sufficient evidence of carcinogenicity in experimental animals. ACGIH recognizes two categories of carcinogens, confirmed or suspected human carcinogens.

Methylene chloride and Perchloroethylene are listed by IARC as possible carcinogens. Methylene chloride and Perchloroethylene are classified by NTP as having limited evidence of carcinogenicity in humans or sufficient evidence of carcinogenicity in experimental animals. Methylene chloride is recognized by ACGIH as a suspected human carcinogen.

Also see Section X.

OTHER POTENTIAL HEALTH HAZARDS: Reports have associated prolonged and repeated occupational exposure to solvents with permanent brain and/or central nervous system damage. Intentional misuse by deliberately concentrating and inhaling this material may be harmful or fatal. Observe all appropriate control measures

The following information is required by Canadian WHMIS regulations. Irritancy is covered in Signs and Symptoms of Exposure in Section VI. There is no known human sensitization or toxicologically synergistic product associated with this product. Toluene and Xylene have demonstrated experimental effects for reproductive toxicity, mutagenicity and teratogenicity. Ethyl benzene and Ethyl alcohol have demonstrated experimental effects for teratogenicity and mutagenicity. Methyl ethyl ketone and 1,1,1-Trichloroethane have shown experimental effects for teratogenicity. There is limited experimental evidence of reproductive toxicity and bacterial mutagenicity associated with Methylene chloride.

SECTION VII -- EMERGENCY AND FIRST AID PROCEDURES

EYES: For direct contact, flush eyes with water for 15 minutes lifting upper and lower lids occasionally. If irritation or redness from exposure to vapors or mists develops, move victim away from exposure into fresh air. Consult physician if irritation or pain persists.

SKIN: Remove contaminated clothing and shoes. Wash skin twice with soap and water. Consult physician if irritation or pain persists.

INHALATION: (Breathing) Remove to fresh air immediately. Use oxygen if there is difficulty breathing or artificial respiration if breathing has stopped. Do not leave victim unattended. Seek immediate medical attention if necessary.

INGESTION: (Swallowing) If conscious, drink 4 to 8 ounces of water and seek immediate medical attention. DO NOT induce vomiting.

SECTION VIII -- PRECAUTIONS FOR SAFE USE AND HANDLING AND PREVENTIVE MEASURES

SPILL PROCEDURES: Remove all ignition sources. Ventilate area and avoid breathing vapors. For large spills, isolate area and deny entry. If possible, contain as a liquid for possible re-refining. Absorb with compatible absorbent material. Shovel into closable container for disposal. Wear protective equipment specified in Section IX. Contain away from surface waters and sewers.

WASTE DISPOSAL METHODS: Dispose in accordance with federal, state, provincial and local regulations. Contact Safety-Kleen regarding recycling or proper disposal.

HANDLING PRECAUTIONS: Avoid contact with eyes, skin, clothing or shoes. Use in well ventilated area and avoid breathing vapors or mists. Keep away from heat, sparks and flames.

SHIPPING AND STORING PRECAUTIONS: Keep container tightly closed when not in use and during transport. Empty product containers may contain product residue. Do not pressurize, cut, heat, weld, grind or expose containers to flame or other sources of ignition. See Section X for Packing Group information.

PERSONAL HYGIENE: Use good personal hygiene. Wash thoroughly with soap and water after handling and before eating, drinking or using tobacco products. Clean contaminated clothing, shoes and protective equipment before reuse.

SECTION IX -- CONTROL MEASURES AND OTHER PREVENTIVE MEASURES

EYE PROTECTION:	Where there is likelihood of spill or splash, wear chemical goggles and faceshield. Contact lenses should not be worn.
PROTECTIVE GLOVES:	Use polyethylene, ethylene vinyl or similar gloves to prevent contact with skin.
RESPIRATORY PROTECTION:	Use NIOSH/MSHA-approved respiratory protective equipment when concentrations of vapors or mists exceeds applicable exposure limit. A self-contained breathing apparatus (SCBA) is required for large spills and emergencies. Selection and use of respiratory protective equipment should be in accordance in the U.S.A. with OSHA General Industry Standard 29 CFR 1910.134 and in Canada with CSA Standard Z94.4-M1982.
ENGINEERING CONTROLS:	Provide local exhaust or general dilution ventilation needed to maintain concentrations of vapors or mists below applicable exposure limits. Where explosive mixtures may be present, systems safe for such locations should be used.
OTHER PROTECTIVE EQUIPMENT:	Wear appropriate solvent-resistant boots, apron or other protective clothing where spills and splashes are possible. A source of clean water should be available in work areas for flushing the eyes and skin.

SECTION X -- OTHER REGULATORY INFORMATION

DOT PROPER SHIPPING NAME:	PAINT RELATED MATERIAL
DOT CLASS:	Class 3
DOT ID NUMBER:	UN1263, Packing Group II
SARA TITLE III:	Product contains toxic chemicals subject to the reporting requirements of Section 313 of Title III of the Superfund Amendments and Reauthorization Act of 1986 and 40 CFR Part 372. Toxic constituents are listed with an asterisk in Section II of this Material Safety Data Sheet. Product poses the following physical and/or health hazards as defined in 40 CFR 370.3 (Sections 311, 312 of SARA Title III): Immediate (Acute) Health Hazard Delayed (Chronic) Health Hazard Fire Hazard
CALIFORNIA:	This product contains detectable amounts of Methylene chloride CAS No. 75-09-2 and Perchloroethylene CAS No. 127-18-4. These materials are listed by the State of California as known carcinogens.
TDGA:	PAINT RELATED MATERIAL, Class 3.2, UN1263, Packing Group II
WHMIS CLASSIFICATION:	Class B2 (Flammable and Combustible Materials, Flammable Liquid): Class D1B (Poisonous and Infectious Materials, Immediate and Serious Toxic Effects, Toxic Material): Class D2A (Poisonous and Infectious Materials, Other Toxic Effects, Very Toxic Material): Class D2B (Poisonous and Infectious Materials, Other Toxic Effects, Toxic Material)

SECTION XI -- PREPARATION INFORMATION

PREPARED BY: Product MSDS Coordinator *FORM PART NO.* 82343

ORIGINAL ISSUE DATE: July 20, 1989 *REVISED:* February 28, 1991 *SUPERSEDES:* December 1, 1989

safety-kleen

SAFETY-KLEEN IMMERSION CLEANER AND COLD PARTS CLEANER 699

MATERIAL SAFETY DATA SHEET

SECTION I -- PRODUCT INFORMATION

Safety-Kleen Corporation - 777 Big Timber Road - Elgin, IL 60123
For Product/Sales Information Call 708/697-8460

EMERGENCY TELEPHONE	*MEDICAL:*	*TRANSPORTATION:*
These numbers are for emergency use only. If you desire non-emergency information about this product, please call the telephone number listed above.	800/942-5969 or 312/942-5969 RUSH POISON CONTROL CENTER CHICAGO, ILLINOIS (24 HOURS)	800/424-9300 CHEMTREC

IDENTITY (TRADE NAME): SAFETY-KLEEN IMMERSION CLEANER AND COLD PARTS CLEANER 699

SK PART NUMBER: 6861, 699

FAMILY/CHEMICAL NAME: N/A

PRODUCT USAGE: REMOVING CARBON RESIDUE FROM PARTS

SECTION II -- HAZARDOUS COMPONENTS

NAME	SYNONYM	TYPICAL % BY WT.	CAS NO.	OSHA PEL (ppm)	ACGIH TLV (ppm)
Aromatic 150	Heavy Aromatic Naphtha Cleaning Solvent, 140 (60) Class		64742-94-5	100 (Exxon)	100 (Exxon)
*(May contain up to 5% Naphthalene)			91-20-3	10 15 STEL	10 15 STEL
N-Methyl-2-Pyrrolidone	NMP		872-50-4	100 (BASF)	100 (BASF)
Dipropylene Glycol Methyl Ether	Dipropylene Glycol Monomethyl Ether		34590-94-8	100 150 STEL	100 150 STEL
Monoethanolamine	Ethanolamine		141-43-5	3 6 STEL	3 6 STEL
Oleic Acid	Red Oil		112-80-1	N/E	N/E
Water			7732-18-5	—	—
**(Total chlorinated solvents)		1.0 (Max)			

N/E = Not Established
* See Section X - Other Regulatory Information
**May contain methylene chloride and/or tetrachloroethylene in concentrations > 0.1%

SECTION III -- PHYSICAL DATA

PHYSICAL STATE, APPEARANCE AND ODOR: Clear, reddish brown liquid with hydrocarbon odor.

BOILING RANGE: 210° - 439° F

MELTING POINT: < 10° F

EVAPORATION RATE: 1.0 (Water = 1)

PERCENT VOLATILE:	92 Wt. %
VAPOR DENSITY:	2.6 (Air = 1.0)
VAPOR PRESSURE:	10.9 mm Hg at 25° C
SOLUBILITY IN WATER:	Completely miscible in all proportions.
pH:	10.8, 50/50 (Water/Solvent)
SPECIFIC GRAVITY:	0.95 (Water = 1.0)
MOLECULAR WEIGHT:	127, Average molecular weight of components.
VOLATILE ORGANIC COMPOUNDS:	N/E

SECTION IV -- FIRE AND EXPLOSION HAZARD DATA

FLASH POINT:	SETA, 142° F (Min.)
AUTOIGNITION TEMPERATURE:	Not Known
CONDITIONS OF FLAMMABILITY:	Ignitable, if material is heated above its flash point.
FLAMMABLE LIMITS IN AIR - LOWER:	0.8 ***UPPER:*** 7.0
EXTINGUISHING MEDIA:	None Special
FIRE FIGHTING PROCEDURES - SPECIAL:	NFPA 704 Rating 2-2-0

UNUSUAL FIRE AND EXPLOSION HAZARDS:

Decomposition and combustion products may be toxic. Heated tanks may rupture, explode or be thrown into the air. Vapors are heavier than air and may travel great distances to ignition source and flashback.

HAZARDOUS COMBUSTION PRODUCTS:

Thermal decomposition and burning may produce carbon monoxide, oxides of nitrogen and acrid smoke.

SECTION V -- REACTIVITY DATA

STABILITY:	Normally stable.
INCOMPATIBILITY: (CONDITIONS TO AVOID)	Strong oxidizing agents (e.g. chlorine, peroxides, strong acids)
HAZARDOUS POLYMERIZATION:	Not known to occur under normal conditions, oxides of nitrogen and acrid smoke. Glycol ethers have been shown to form explosive peroxides.
HAZARDOUS DECOMPOSITION PRODUCTS:	Normally none; however, incomplete burning may yield carbon monoxide.

SECTION VI -- HEALTH HAZARD DATA

PRIMARY ROUTES OF EXPOSURE: Inhalation, skin and eye contact, skin absorption.

HEALTH HAZARD DATA/SIGNS AND SYMPTOMS OF EXPOSURE:

ACUTE: *Skin*: Corrosive to living tissue and is absorbed through the skin causing systemic poisoning. Contact with unprotected skin can cause discoloration, irritation, blistering and slow healing chemical burns.

Eyes: Contact with liquid may cause severe chemical burns and produce permanent damage.

Inhalation: May result in severe respiratory irritation; gastrointestinal distress (nausea, vomiting), central nervous system depression (headache, drowsiness, dizziness, confusion) and tingling or numbness of the extremities. Severe exposures may lead to respiratory failure, coma and death.

Ingestion: May produce burning pain in the mouth and stomach, severe abdominal pain with nausea, vomiting, slow respiration and irregular pulse. Symptoms similar to those for inhalation also may occur.

CHRONIC: Exposure to high concentrations may lead to damage to the liver, kidneys and lungs. Contact with skin may cause dermatitis, gastrointestinal disorders and produce symptoms similar to those for inhalation.

OTHER POTENTIAL HEALTH HAZARDS:

Dipropylene glycol methyl ether is a mild allergen.

MEDICAL CONDITIONS AGGRAVATED BY EXPOSURE: Individuals with pre-existing liver, kidney, lung or cardiovascular dysfunction may have increased susceptibility to the effects of exposure. Contact with skin may aggravate pre-existing dermatitis.

CARCINOGENICITY: Naphthalene is an experimental tumorigen. Mutagenic data exists and Naphthalene is included in EPA Genetic Toxicology Program. Oleic acid is an experimental tumorigen. Methylene Chloride and Tetrachloroethylene are listed by IARC and NTP as suspected carcinogens.

SECTION VII -- EMERGENCY AND FIRST AID PROCEDURES

EYES: For direct contact, flush eyes with clean water for 20 minutes lifting upper and lower lids occasionally. Consult physician if irritation persists. If irritation or redness from exposure to vapors or mists develop, move victim away from exposure and into fresh air.

SKIN: Remove contaminated clothing. Wash skin twice with soap and water. If irritation develops and persists, consult a physician.

INGESTION: Aspiration hazard. If conscious, dilute with 4 to 8 ounces of water and seek immediate medical attention. DO NOT induce vomiting.

INHALATION: Remove to fresh air immediately. Use oxygen if there is difficulty breathing or artificial respiration if respiration has stopped. Do not leave victim unattended. Seek immediate medical attention if necessary.

SECTION VIII -- PRECAUTIONS FOR SAFE USE AND HANDLING

SPILL PROCEDURES: Ventilate area and avoid breathing vapors. Absorb spill with oil absorbent or soda ash. Catch and collect for recovery as soon as possible. Shovel into closable container for disposal. Wear protective equipment specified below. Contain away from surface waters and sewers.

WASTE DISPOSAL METHODS: Dispose in accordance with Federal, State and local regulations. Contact Safety-Kleen regarding recycling.

HANDLING PRECAUTIONS: Keep away from heat, sparks and open flames. Use adequate ventilation. Avoid contact with skin, eyes and clothing. Avoid breathing vapors.

SHIPPING AND STORING PRECAUTIONS: Empty product containers may contain product residue. Do not pressurize, cut, heat, weld, grind or expose containers to flame or other sources of ignition. Keep container tightly closed when not in use and during transport.

PERSONAL HYGIENE: Use good personal hygiene. Wash thoroughly with soap and water after handling and before eating, drinking or using tobacco products.

SECTION IX - CONTROL MEASURES

VENTILATION: Provide local exhaust or general dilution ventilation, as determined necessary, to maintain concentrations of vapors below applicable exposure limits.

PROTECTIVE GLOVES: Wear neoprene gloves to prevent skin contact.

EYE PROTECTION: Where there is a likelihood of contact with the face and/or eyes, wear a faceshield and chemical goggles. Contact lenses should not be worn.

RESPIRATORY PROTECTION: Use NIOSH-approved respiratory protective equipment when concentration of vapors exceeds applicable exposure limit. Depending on the airborne concentration, use a respirator or gas mask with appropriate cartridges or canisters (for organic vapors). A self-contained breathing apparatus (SCBA) is required for large spills and emergencies. Selection and use of respiratory protective equipment should be in accordance with OSHA General Industry Standard 29 CFR 1910.134 - Respiratory Protection.

OTHER PROTECTIVE EQUIPMENT: A source of clean water should be available in the work area for flushing eyes and skin. Wear solvent-resistant boots, apron or other protective clothing where spills or splashes are possible.

SECTION X -- OTHER REGULATORY INFORMATION

DOT PROPER SHIPPING NAME: Compound, Cleaning Liquid

DOT CLASS: Corrosive Liquid

DOT ID NUMBER: NA1760

SARA TITLE III: Product contains a toxic chemical or chemicals subject to the reporting requirements of Section 313 of Title III of the Superfund Amendments and Reauthorization Act of 1986 and 40 CFR Part 372. Toxic constituents are listed with an asterisk in Section II of this Material Safety Data Sheet.

Product poses the following physical and/or health hazard(s) as defined in 40 CFR 370.3 (Sections 311, 312 of SARA Title III):

Immediate (Acute) Health Hazard
Delayed (Chronic) Health Hazard
Fire Hazard
Reactivity Hazard

SECTION XI -- PREPARATION INFORMATION

PREPARED BY: SK Technical Services ***FORM NO.*** 900-14-057

ORIGINAL ISSUE DATE: December 1, 1989 ***REVISED:*** July 13, 1990 ***SUPERSEDES:*** April 6, 1990

IMMERSION CLEANER/CARBURETOR AND COLD PARTS CLEANER 609

MATERIAL SAFETY DATA SHEET

SECTION I -- PRODUCT INFORMATION

Safety-Kleen Corporation - 777 Big Timber Road - Elgin, IL 60123
For Product/Sales Information Call 708/697-8460

EMERGENCY TELEPHONE	*MEDICAL:*	*TRANSPORTATION:*
These numbers are for emergency use only. If you desire non-emergency information about this product, please call the telephone number listed above.	800/942-5969 or 312/942-5969 RUSH POISON CONTROL CENTER CHICAGO, ILLINOIS (24 HOURS)	800/424-9300 CHEMTREC

IDENTITY (TRADE NAME): IMMERSION CLEANER/CARBURETOR AND COLD PARTS CLEANER 609

SK PART NUMBER: 609, 6631, 50

FAMILY/CHEMICAL NAME: N/A

PRODUCT USAGE: REMOVING CARBON RESIDUE FROM PARTS

SECTION II -- HAZARDOUS COMPONENTS

NAME	SYNONYM	%	CAS NO.	OSHA PEL (ppm)	ACGIH TLV (ppm)
*Cresylic Acid	Mixed Cresols	11.9	1319-77-3	5 (Skin)	5 (Skin)
Petroleum Sulfonate	Surfactant Blend	7.4			
Contains:					
Hexylene Glycol			107-41-5	25(C)	25(C)
Diethylene Glycol			111-46-6	N/E	N/E
*Methylene Chloride	Dichloromethane	31.7	75-09-2	500 1000(C)	50
*Di-chlorobenzenes:					
*(o-dichlorobenzene)	ODCB	10.5	95-50-1	50(C)	50(C)
*(p-dichlorobenzene)		10.5	106-46-7	75 110 STEL	75 110 STEL
*(m-dichlorobenzene)		10.5	541-73-1	N/E	N/E
Complex Amines	Rust Inhibitor	0.4			
Contains:					
Propargyl Alcohol			107-19-7	1 (Skin)	1 (Skin)
*Isopropyl Alcohol			67-63-0	400 500 STEL	400 500 STEL
Triethanolamine	TEA	0.4	102-71-6	N/E	N/E
Water		16.8	7732-18-5	N/E	N/E

* See Section X - Other Regulatory Information
N/E = Not Established
(C) = Ceiling Concentration

SECTION III -- PHYSICAL DATA

PHYSICAL STATE, APPEARANCE AND ODOR: Liquid - clear, dark amber, with aromatic odor. Two distinct layers comprise the product; top layer water, lower layer solvent.

BOILING POINT: 102° - 395° F

MELTING POINT:	Not known
EVAPORATION RATE:	1.0 (Water = 1)
PERCENT VOLATILE:	Majority
VAPOR DENSITY:	Same as Water
VAPOR PRESSURE:	Same as Water
SOLUBILITY IN WATER:	Completely miscible in all proportions.
pH:	9-10 in water phase
SPECIFIC GRAVITY:	1.19 (Water = 1.0)
MOLECULAR WEIGHT:	Use molecular weights of individual components.
VOLATILE ORGANIC COMPOUNDS:	750 g/L

SECTION IV -- FIRE AND EXPLOSION HAZARD DATA

FLASH POINT:	Non-Flammable
AUTOIGNITION TEMPERATURE:	Not Known
CONDITIONS OF FLAMMABILITY:	Non-Flammable
FLAMMABLE LIMITS IN AIR - LOWER:	Non-Flammable *UPPER:* Non-Flammable
EXTINGUISHING MEDIA:	None Special
FIRE FIGHTING PROCEDURES - SPECIAL:	None; product is non-flammable. NFPA 704 Rating 3-2-0

UNUSUAL FIRE AND EXPLOSION HAZARDS:

Although product is non-flammable, flames, welding arcs or other high temperature sources can cause decomposition. This decomposition can yield corrosive and toxic gases, vapors mists or fumes. Use a self-contained breathing apparatus (SCBA).

HAZARDOUS COMBUSTION PRODUCTS:

Although product is non-flammable, flames, welding arcs or other high temperature sources can cause decomposition. This decomposition can yield corrosive and toxic gases, vapors, mists or fumes (e.g. hydrogen chloride, phosgene, carbon monoxide, etc.)

SECTION V -- REACTIVITY DATA

STABILITY:	Normally stable.
INCOMPATIBILITY: (CONDITIONS TO AVOID)	Strong oxidizing agents (e.g. chlorine, peroxides, strong acids)
HAZARDOUS POLYMERIZATION:	Not known to occur under normal conditions.
HAZARDOUS DECOMPOSITION PRODUCTS:	Normally none; however, flames and welding arcs can produce corrosive and toxic gases, vapors and fumes (e.g. hydrogen chloride, phosgene, carbon monoxide).

SECTION VI – HEALTH HAZARD DATA

PRIMARY ROUTES OF EXPOSURE:	Inhalation, skin and eye contact, skin absorption.

HEALTH HAZARD DATA/SIGNS AND SYMPTOMS OF EXPOSURE:

ACUTE: ***Skin***: Corrosive to living tissue and is rapidly absorbed through the skin causing systemic poisoning. Contact with unprotected skin can cause discoloration, irritation, blistering and slow healing chemical burns. Partial anesthetic properties may mask affects.

Eyes: Contact with liquid may cause severe chemical burns and produce permanent damage.

Inhalation: May result in severe respiratory irritation; gastrointestinal distress (nausea, vomiting), central nervous system depression (headache, drowsiness, dizziness, confusion) and tingling or numbness of the extremities. Severe exposures may lead to respiratory failure, coma and death.

Ingestion: May produce burning pain in the mouth and stomach, severe abdominal pain with nausea, vomiting, slow respiration and irregular pulse, and dark blue skin discoloration. Symptoms similar to those for inhalation also may occur.

CHRONIC: Exposure to high concentrations may lead to damage to the liver, kidneys and lungs. Contact with skin may cause dermatitis, gastrointestinal disorders and produce symptoms similar to those for inhalation.

OTHER POTENTIAL HEALTH HAZARDS:

Metabolism of methylene chloride may elevate carboxyhemoglobin levels.

MEDICAL CONDITIONS AGGRAVATED BY EXPOSURE: Individuals with pre-existing liver, kidney, lung or cardiovascular dysfunction may have increased susceptibility to the effects of exposure. Contact with skin may aggravate pre-existing dermatitis.

CARCINOGENICITY: Methylene chloride is listed by NTP and IARC as a suspected carcinogen. P-dichlorobenzene is listed by IARC as a suspected carcinogen.

SECTION VII -- EMERGENCY AND FIRST AID PROCEDURES

EYES: For direct contact, flush eyes with clean water for 15 minutes lifting upper and lower lids occasionally. Consult physician if irritation persists. If irritation or redness from exposure to vapors or mists develop, move victim away from exposure and into fresh air.

SKIN: Remove contaminated clothing. Wash skin twice with soap and water. If irritation develops and persists, consult a physician.

INGESTION: Aspiration hazard. If conscious, dilute with 4 to 8 ounces of water and seek immediate medical attention. DO NOT induce vomiting.

INHALATION: Remove to fresh air immediately. Use oxygen if there is difficulty breathing or artificial respiration if respiration has stopped. Do not leave victim unattended. Seek immediate medical attention if necessary.

SECTION VIII -- PRECAUTIONS FOR SAFE USE AND HANDLING

SPILL PROCEDURES: Ventilate area and avoid breathing vapors. Absorb spill with oil absorbent or soda ash. Catch and collect for recovery as soon as possible. Shovel into closable container for disposal. Wear protective equipment specified below. Contain away from surface waters and sewers.

WASTE DISPOSAL METHODS: Dispose in accordance with Federal, State and local regulations. Contact Safety-Kleen regarding recycling.

HANDLING PRECAUTIONS: Keep away from heat, sparks and open flames. Use adequate ventilation. Avoid contact with skin, eyes and clothing. Avoid breathing vapors.

SHIPPING AND STORING PRECAUTIONS: Empty product containers may contain product residue. Do not pressurize, cut, heat, weld, grind or expose containers to flame or other sources of ignition. Keep container tightly closed when not in use and during transport.

PERSONAL HYGIENE: Use good personal hygiene. Wash thoroughly with soap and water after handling and before eating, drinking or using tobacco products.

SECTION IX - CONTROL MEASURES

VENTILATION: Provide local exhaust or general dilution ventilation, as determined necessary, to maintain concentrations of vapors below applicable exposure limits.

PROTECTIVE GLOVES: Wear Viton gloves to prevent skin contact.

EYE PROTECTION: Where there is a likelihood of contact with the face and/or eyes, wear a faceshield and chemical goggles. Contact lenses should not be worn.

RESPIRATORY PROTECTION: Use NIOSH-approved respiratory protective equipment when concentration of vapors exceeds applicable exposure limit. Depending on the airborne concentration, use a respirator or gas mask with appropriate cartridges or canisters (for organic vapors). A self-contained breathing apparatus (SCBA) is required for large spills and emergencies. Selection and use of respiratory protective equipment should be in accordance with OSHA General Industry Standard 29 CFR 1910.134 - Respiratory Protection.

OTHER PROTECTIVE EQUIPMENT: A source of clean water should be available in the work area for flushing eyes and skin. Wear solvent-resistant boots, apron or other protective clothing where spills or splashes are possible.

SECTION X -- OTHER REGULATORY INFORMATION

DOT PROPER SHIPPING NAME: Compound, Cleaning Liquid

DOT CLASS: Corrosive Liquid

DOT ID NUMBER: NA1760

SARA TITLE III: Product contains a toxic chemical or chemicals subject to the reporting requirements of Section 313 of Title III of the Superfund Amendments and Reauthorization Act of 1986 and 40 CFR Part 372. Toxic constituents are listed with an asterisk in Section II of this Material Safety Data Sheet.

Product poses the following physical and/or health hazard(s) as defined in 40 CFR 370.3 (Sections 311, 312 of SARA Title III):

Immediate (Acute) Health Hazard
Delayed (Chronic) Health Hazard

SECTION XI -- PREPARATION INFORMATION

PREPARED BY: SK Product Review Committee ***FORM NO.*** 900-14-002

ORIGINAL ISSUE DATE: July 20, 1989 ***REVISED:*** December 1, 1989 ***SUPERSEDES:*** July 20, 1989

MATERIAL SAFETY DATA SHEET

SECTION I -- PRODUCT INFORMATION

Safety-Kleen Corporation - 777 Big Timber Road - Elgin, IL 60123
For Product/Sales Information Call 708/697-8460

EMERGENCY TELEPHONE	*MEDICAL:*	*TRANSPORTATION:*
These numbers are for emergency use only. If you desire non-emergency information about this product, please call the telephone number listed above.	800/942-5969 or 312/942-5969 RUSH POISON CONTROL CENTER CHICAGO, ILLINOIS (24 HOURS)	800/424-9300 CHEMTREC

IDENTITY (TRADE NAME): SAFETY-KLEEN DRY CLEANING GRADE SOLVENT F 780

SK PART NUMBER: 780

FAMILY/CHEMICAL NAME: CHLORINATED/FLUORINATED HYDROCARBON

PRODUCT USAGE: DRY CLEANING SOLVENT

SECTION II -- HAZARDOUS COMPONENTS

NAME	SYNONYM	%	CAS NO.	OSHA PEL (ppm)	ACGIH TLV (ppm)
*Trichlorotrifluoroethane	Fluorocarbon 113	~100	76-13-1	1000 1250 STEL	1000

* See Section X - Other Regulatory Information

SECTION III -- PHYSICAL DATA

PHYSICAL STATE, APPEARANCE AND ODOR: Liquid - clear, colorless liquid with slight ethereal odor.

BOILING POINT: 117.6° F

MELTING POINT: Not Applicable

EVAPORATION RATE: 0.1 (CCl_4 = 1)

PERCENT VOLATILE: 100%

VAPOR DENSITY: 6.5 (Air = 1)

VAPOR PRESSURE: 334 mm Hg @ 77° F

SOLUBILITY IN WATER: 0.02% by weight (77° F)

pH: Not Applicable

SPECIFIC GRAVITY: 1.57 (Water = 1, @ 77° F)

MOLECULAR WEIGHT: 187

VOLATILE ORGANIC COMPOUNDS: None

MEDICAL CONDITIONS AGGRAVATED BY EXPOSURE:

Individuals with pre-existing lung, skin and cardiovascular system dysfunction may have increased susceptibility to effects of the exposure. Contact with skin may aggravate pre-existing dermatitis.

CARCINOGENICITY: No components are listed by OSHA, NTP or IARC as known or suspected carcinogens.

SECTION VII -- EMERGENCY AND FIRST AID PROCEDURES

EYES: Flush eyes with water for 20 minutes lifting upper and lower lids occasionally. Consult physician if irritation persists. If irritation or redness from exposure to vapors or mists develop, move victim away from exposure and into fresh air.

SKIN: Remove contaminated clothing. Wash skin twice with soap and water. If irritation persists, consult a physician.

INGESTION: Aspiration hazard. If conscious, dilute with 4 to 8 ounces of water and seek immediate medical attention. DO NOT induce vomiting.

INHALATION: Remove to fresh air immediately. Use oxygen if there is difficulty breathing or artificial respiration if breathing has stopped. Do not leave victim unattended. Seek immediate medical attention if necessary.

SECTION VIII -- PRECAUTIONS FOR SAFE HANDLING AND USE

SPILL PROCEDURES: Isolate area and deny entry. Ventilate area and avoid breathing vapors. Remove residue with inert sorbent such as sand, oil dry or other absorbent material. Shovel into closable container for disposal. Wear protective equipment specified below. Contain away from surface waters and sewers.

WASTE DISPOSAL METHODS: Dispose in accordance with Federal, State and local regulations. Contact Safety-Kleen regarding recycling.

HANDLING PRECAUTIONS: Do not get into eyes, on skin or clothing. Avoid breathing vapors or mists.

SHIPPING AND STORING PRECAUTIONS: Empty product containers may contain product residue. Do not pressurize, cut, heat, weld, grind or expose containers to flame or other sources of ignition. Keep container tightly closed when not in use and during transport. Do not store above 125° F.

PERSONAL HYGIENE: Use good personal hygiene. Wash thoroughly with soap and water after handling and before eating, drinking or using tobacco products.

SECTION IX -- CONTROL MEASURES

VENTILATION: Provide local exhaust or general dilution ventilation as determined necessary to maintain concentrations of vapors below applicable exposure limits.

PROTECTIVE GLOVES: Wear neoprene or nitrile gloves for repeated or prolonged contact.

EYE PROTECTION: Where there is likelihood of spill or splash, wear chemical goggles or faceshield. Contact lenses should not be worn.

RESPIRATORY PROTECTION: Use NIOSH-approved respiratory protective equipment when concentration of vapors exceeds applicable exposure limit. Depending on the airborne concentration, use a respirator or gas mask with appropriate cartridges and canisters (chemical cartridge for organic vapors). A self-contained breathing apparatus (SCBA) is required for large spills and emergencies. Selection and use of respiratory protective equipment should be in accordance with OSHA General Industry Standard 29 CFR 1910.134 - Respiratory Protection.

OTHER PROTECTIVE EQUIPMENT: A source of clean water should be available in work area for flushing eyes and skin. Wear rubber boots, apron and other protective clothing as need to protect against contact with skin.

SECTION X -- OTHER REGULATORY INFORMATION

DOT PROPER SHIPPING NAME: Cleaning Compound N.O.I.

DOT CLASS: None

DOT ID NUMBER: None

SARA TITLE III: Product contains a toxic chemical or chemicals subject to the reporting requirements of Section 313 of Title III of the Superfund Amendments and Reauthorization Act of 1986 and 40 CFR Part 372. Toxic constituents are listed with an asterisk in Section II of this Material Safety Data Sheet.

Product poses the following physical and/or health hazard(s) as defined in 40 CFR 370.3 (Sections 311, 312 of SARA Title III):

Immediate (Acute) Health Hazard
Delayed (Chronic) Health Hazard

SECTION XI -- PREPARATION INFORMATION

PREPARED BY: SK Product Review Committee *FORM NO.* 900-14-021

ORIGINAL ISSUE DATE: July 20, 1989 *REVISED:* December 1, 1989 *SUPERSEDES:* July 20, 1989

SAFETY-KLEEN MULTI-USE LACQUER THINNER 6801

MATERIAL SAFETY DATA SHEET

SECTION I -- PRODUCT INFORMATION

Safety-Kleen Corporation - 777 Big Timber Road - Elgin, IL 60123
For Product/Sales Information Call 708/697-8460

EMERGENCY TELEPHONE	*MEDICAL:*	*TRANSPORTATION:*
These numbers are for emergency use only. If you desire non-emergency information about this product, please call the telephone number listed above.	800/942-5969 or 312/942-5969 RUSH POISON CONTROL CENTER CHICAGO, ILLINOIS (24 HOURS)	800/424-9300 CHEMTREC

IDENTITY (TRADE NAME): SAFETY-KLEEN MULTI-USE LACQUER THINNER 6801

SK PART NUMBER: 6301

FAMILY/CHEMICAL NAME: N/A

PRODUCT USAGE: LACQUER THINNER

SECTION II -- HAZARDOUS COMPONENTS

NAME	SYNONYM	%	CAS NO.	OSHA PEL (ppm)	ACGIH TLV (ppm)
*Toluene	Toluol	11-43	108-88-3	100 150 STEL	100 150 STEL
*Xylene	Xylol	3-4	1330-20-7	100 150 STEL	100 150 STEL
*Methyl Ethyl Ketone	MEK	-5	78-93-3	200 300 STEL	200 300 STEL
*Methyl Isobutyl Ketone	MIBK	-3	108-10-1	50 75 STEL	50 75 STEL
*Acetone	2-Propanone	20-30	67-64-1	750 1000 STEL	750 1000 STEL
*Isopropanol	Isopropyl Alcohol	5-15	67-63-0	400 500 STEL	400 500 STEL
Special Latent Spirits	VM & P Naphtha	0.5-32	8030-30-6	300 400 STEL	300 STEL
Isobutyl Acetate	Isobutyl Ester Acetic Acid	0.1-15	110-19-0	150	150
Ethyl 3-Ethoxypropionate	3-Ethoxypropionic Acid Ethyl Ester	-5	763-69-9	N/E	N/E

N/E = Not Established
* See Section X - Other Regulatory Information

SECTION III -- PHYSICAL DATA

PHYSICAL STATE, APPEARANCE AND ODOR: Liquid - colorless, clear, with a characteristic solvent odor.

BOILING POINT: -131 - 347° F

MELTING POINT: Not Applicable

EVAPORATION RATE: 3.30 (N-Butyl = 1)

APOR DENSITY:	[illegible] (Air = 1)
APOR PRESSURE:	78.6 mm Hg @ 20° C
OLUBILITY IN WATER:	Appreciable
H:	Not Applicable
PECIFIC GRAVITY:	– 0.8000 - 0.8438 (Water = 1)
OLECULAR WEIGHT:	Use molecular weight of individual components.
OLATILE ORGANIC COMPOUNDS:	800 - 844 g/L

SECTION IV -- FIRE AND EXPLOSION HAZARD DATA

LASH POINT:	< 20° F (TCC)
UTOIGNITION TEMPERATURE:	Not Available
CONDITIONS OF FLAMMABILITY:	Normal temperatures and pressures.
FLAMMABLE LIMITS IN AIR - LOWER:	1.0% *UPPER:* 13.2%
EXTINGUISHING MEDIA:	Carbon dioxide, foam, dry chemical, water (mist only)
FIRE FIGHTING PROCEDURES – SPECIAL:	NFPA 704 Rating 2-3-0

Water may be used to cool containers and fire fighters. However, water could cause free solvent to float and spread fire.

UUAL FIRE AND EXPLOSION HAZARDS:

Flammable liquid. Most components are Class 1B with flash point below 73° F and boiling point above 100° F.

HAZARDOUS COMBUSTION PRODUCTS: Carbon Monoxide

SECTION V -- REACTIVITY DATA

STABILITY:	Stable under normal temperatures and conditions.
INCOMPATIBILITY: (CONDITIONS TO AVOID)	Heat sparks, flames, fire, strong oxidizing agents.
HAZARDOUS POLYMERIZATION:	Not known to occur under normal conditions.
HAZARDOUS DECOMPOSITION PRODUCTS:	Normally none. Incomplete burning may yield carbon monoxide.

SECTION VI – HEALTH HAZARD DATA

PRIMARY ROUTES EXPOSURE: Inhalation, skin and eye contact.

HEALTH HAZARD DATA/SIGNS AND SYMPTOMS OF EXPOSURE:

ACUTE: *Skin:* Contact may cause irritation, dryness and cracking. Prolonged or repeated contact may remove skin oils, possibly leading to irritation and dermatitis. Material is readily absorbed through skin.

Eyes: Direct contact may cause severe irritation and temporary corneal damage. Vapors may cause noticeable redness, tearing, irritation and pain. Conjunctivitis may occur upon chronic exposure.

Inhalation: Can cause headache, dizziness, confusion, nausea, vomiting, irritation of the respiratory system and other central nervous system effects including unconsciousness in extreme cases.

Ingestion: Can cause burning of the mouth, throat and abdomen, nausea, vomiting, diarrhea, symptoms of the central nervous system depression, including weakness, dizziness, slow and shallow respiration, unconsciousness and convulsions. Aspiration into the lungs during ingestion or vomiting may cause mild to severe pulmonary injury and possible death.

CHRONIC: *Inhalation*: Prolonged overexposure may cause damage to the liver, kidney, spleen, lungs or nervous system.

OTHER POTENTIAL HEALTH HAZARDS:

Reports have associated prolonged and repeated occupational exposure to solvents with permanent brain and/or central nervous system damage. Intentional misuse by deliberately concentrating and inhaling this material may be harmful or fatal. Observe all appropriate control measures.

MEDICAL CONDITIONS AGGRAVATED BY EXPOSURE:

Individuals with pre-existing liver, kidney, spleen, lungs, skin or nervous system dysfunction may have increased susceptibility to the effects of the exposure. Contact with skin may aggravate pre-existing dermatitis.

CARCINOGENICITY: No components are known or suspected carcinogens.

SECTION VII -- EMERGENCY AND FIRST AID PROCEDURES

EYES: For direct contact, flush eyes with clean water for 15 minutes lifting upper and lower lids occasionally. Consult physician if irritation persists. If irritation or redness from exposure to vapors or mists develop, move victim away from exposure and into fresh air.

SKIN: Remove contaminated clothing. Wash skin twice with soap and water. If irritation develops and persists, consult a physician.

INGESTION: Aspiration hazard. If conscious, dilute with 4 to 8 ounces of water and seek immediate medical attention. DO NOT induce vomiting.

INHALATION: Remove to fresh air immediately. Use oxygen if there is difficulty breathing or artificial respiration if respiration has stopped. Do not leave victim unattended. Seek immediate medical attention if necessary.

SECTION VIII -- PRECAUTIONS FOR SAFE USE AND HANDLING

SPILL PROCEDURES: Remove all ignition sources. Isolate area and deny entry. If possible, contain as a liquid for possible recycling. Absorb onto sand or other absorbent material. Shovel into closable container for disposal. Wear protective equipment specified below. Contain away from surface waters and sewers.

WASTE DISPOSAL METHODS: Dispose in accordance with Federal, State and local regulations. Contact Safety-Kleen regarding recycling.

HANDLING PRECAUTIONS: Do not get into eyes, on skin or clothing. Avoid breathing vapors. DO NOT smoke when handling this product.

SHIPPING AND STORING PRECAUTIONS: Empty product containers may contain product residue. Do not pressurize, cut, heat, weld, grind or expose containers to flame or other sources of ignition. Keep container tightly closed when not in use and during transport.

PERSONAL

VENTILATION:	Provide local exhaust or general dilution ventilation as determined necessary, when concentrations of vapors exceed applicable exposure limits. Where explosive mixtures may be present, systems safe for such locations should be used.
PROTECTIVE GLOVES:	To protect against contact with skin, wear nitrile gloves.
EYE PROTECTION:	Where there is likelihood of eye contact, wear chemical goggles. Contact lenses should not be worn.
RESPIRATORY PROTECTION:	Use NIOSH-approved respiratory protective equipment when concentration of vapors exceeds applicable exposure limit. Depending on the airborne concentration, use a respirator or gas mask with appropriate cartridges and canisters (for organic vapors). A self-contained breathing apparatus (SCBA) is required for large spills and emergencies. Selection and use of respiratory protective equipment should be in accordance with OSHA General Industry Standard 29 CFR 1910.134 - Respiratory Protection.
OTHER PROTECTIVE EQUIPMENT:	A source of clean water should be available in the work area for flushing eyes and skin. Wear rubber apron or other protective clothing as needed to protect against spills or splash.

SECTION X – OTHER REGULATORY INFORMATION

DOT PROPER SHIPPING NAME:	Paint-Related Material
DOT CLASS:	Flammable Liquid
DOT ID NUMBER:	NA1263
SARA TITLE III:	Product contains a toxic chemical or chemicals subject to the reporting requirements of Section 313 of Title III of the Superfund Amendments and Reauthorization Act of 1986 and 40 CFR Part 372. Toxic constituents are listed with an asterisk in Section II of this Material Safety Data Sheet. Product poses the following physical and/or health hazard(s) as defined in 40 CFR 370.3 (Sections 311, 312 of SARA Title III): Immediate (Acute) Health Hazard Delayed (Chronic) Health Hazard Fire Hazard

SECTION XI – PREPARATION INFORMATION

PREPARED BY: SK Product Review Committee *FORM NO.* 900-14-056

ORIGINAL ISSUE DATE: July 20, 1989 *REVISED:* December 1, 1989 *SUPERSEDES:* July 20, 1989

APPENDIX B

EXAMPLE LETTERS TO LOCAL AUTHORITIES

safety-kleen.

January 31, 1992

CERTIFIED MAIL - RETURN RECEIPT REQUESTED

Metro Dade Police Department
1850 NW 86th Avenue
Miami, FL 33173

RE: Safety-Kleen Corp. Medley, Florida Facility

Dear Sir:

Under terms of U.S.E.P.A. Regulation 40 CFR 264.37, Safety-Kleen Corp. must make arrangements to familiarize police and fire departments with the layout of the facility, places where facility personnel would be working, entrances to roads inside the facility, and possible evacuation routes.

Material Safety Data Sheets are enclosed for Mineral Spirits, Immersion Cleaner (chlorinated solvents), and Perchloroethylene (dry cleaning solvent). These documents describe the properties and associated hazards of the materials at the facility.

A copy of the Contingency Plan and Emergency Procedures is also attached for your file.

As required by law, Safety-Kleen will need your acknowledgment of receipt of this letter and indications that you have been familiarized with the action necessary in the event of an emergency and that you are willing to provide assistance.

If you have any questions or desire to visit the facility, please contact the branch manager, Mr. Jorge Carvajal (305) 891-9409.

Sincerely,

Victor L. San Agustin

Victor L. San Agustin, P.E.
Regional Environmental Engineer
Tampa Region

CHN/mmm/pjh

Enclosure(s)

13112.21/TSK10/EXHIBITS.IE

777 BIG TIMBER ROAD ELGIN, ILLINOIS 60123 PHONE 708/697-8460 FAX 708/697-4295

safety-kleen.

January 31, 1992

CERTIFIED MAIL - RETURN RECEIPT REQUESTED

Metro Dade Fire Department
6000 SW 87th Avenue
Miami, FL 33173

RE: Safety-Kleen Corp. Medley, Florida Facility

Dear Sir:

Under terms of U.S.E.P.A. Regulation 40 CFR 264.37, Safety-Kleen Corp. must make arrangements to familiarize police and fire departments with the layout of the facility, places where facility personnel would be working, entrances to roads inside the facility, and possible evacuation routes.

Material Safety Data Sheets are enclosed for Mineral Spirits, Immersion Cleaner (chlorinated solvents), and Perchloroethylene (dry cleaning solvent). These documents describe the properties and associated hazards of the materials at the facility.

A copy of the Contingency Plan and Emergency Procedures is also attached for your file.

As required by law, Safety-Kleen will need your acknowledgment of receipt of this letter and indications that you have been familiarized with the action necessary in the event of an emergency and that you are willing to provide assistance.

If you have any questions or desire to visit the facility, please contact the branch manager, Mr. Jorge Carvajal (305) 891-9409.

Sincerely,

Victor L. San Agustin

Victor L. San Agustin, P.E.
Regional Environmental Engineer
Tampa Region

CHN/mmm/pjh

Enclosure(s)

13112.21/TSK10/EXHIBITS.IE

777 BIG TIMBER ROAD ELGIN, ILLINOIS 60123 PHONE 708/697-8460 FAX 708/697-4295

safety-kleen.

January 31, 1992

CERTIFIED MAIL - RETURN RECEIPT REQUESTED

Palmetto General Hospital
2001 West 68th Street
Hialeah, FL 33016

RE: Safety-Kleen Corp. Medley, Florida Facility

Dear Sir:

Under terms of U.S.E.P.A. Regulation 40 CFR 264.37, Safety-Kleen Corp. is required to familiarize local hospitals with the properties of the materials handled at their facilities and the types of injuries or illnesses which could result from fires, explosions, or releases at this facility.

Material Safety Data Sheets are enclosed for Mineral Spirits, Immersion Cleaner (chlorinated solvents), and Perchloroethylene (dry cleaning solvent). These documents describe the properties and associated hazards of the materials at the facility.

As required by law, Safety-Kleen will need your acknowledgment of receipt of this letter and indications that you have been familiarized with the action necessary in the event of an emergency and that you are willing to provide assistance.

If you have any questions or desire to visit the facility, please contact the branch manager, Mr. Jorge Carvajal (305) 891-9409

Sincerely,

Victor L. San Agustin, P.E.
Regional Environmental Engineer
Tampa Region

CHN/mmm/pjh

Enclosure(s)

13112.21/TSK10/EXHIBITS.IE

777 BIG TIMBER ROAD ELGIN, ILLINOIS 60123 PHONE 708/697-8460 FAX 708/697-4295

ATTACHMENT II.A.4(d)

PREPAREDNESS AND PREVENTION PROCEDURES

TABLE OF CONTENTS

LIST OF FIGURES

LIST OF TABLES

ATTACHMENT II.A.4(d)
PREPAREDNESS AND PREVENTION PROCEDURES

OPERATING FACILITY PROCEDURES

Inspection of Waste Management Facilities

1. The purpose of the inspection plan is to establish a procedure and schedule for the systematic monitoring and inspection of hazardous waste management and other material management facilities to ensure proper operation and maintain compliance. Table II.A.4(d)-1 provides an Inspection Schedule.

2. The Branch Manager or his designate will be responsible for carrying out the inspections of all hazardous waste management facilities in accordance with the following procedure and schedule.

3. The Branch Manager or his designate will inspect the security features of the facility daily (e.g., gates and locks), looking for and any evidence of sticking, corrosion, or uncommon activity. The facility fence will be checked weekly for deterioration, gaps, and broken wire ties.

4. Daily inspections will include the following:

   a. Physically examine the container storage area to verify that leaks have not occurred since the last inspection.

   b. Verify that the tanks and containers have not been damaged or rusted to the point of near leakage.

   c. Replace or adjust damaged, missing, or loose equipment.

TABLE II.A.4(d)-1

INSPECTION SCHEDULE

Area/Equipment	Specific Item	Types of Problems	Frequency of Inspection
Safety Equipment	Fire Extinguishers	■ Overdue inspection ■ Inadequately charged ■ Inaccessible	Weekly
	Eye Wash	■ Disconnected/malfunctioning values ■ Pressure ■ Inaccessible	Weekly
	First-Aid Kit	■ Inadequate inventory	Weekly
	Spill Cleanup Equipment	■ Inadequate supply of sorbent, towels, shovels, mops, empty drums	Weekly
	Personal Protection Equipment	■ Inadequate supply of aprons, glasses, respirators	Weekly
Security Equipment	Gates and Locks	■ Sticking, corrosion, lack of warning signs	Weekly
	Fence	■ Broken ties, corrosion, holes, distortion	Weekly
Storage Tank System-Storage Tanks	Volume in Tank	■ Must never be more than 95 percent full	Each operating day
	Tank Exterior	■ Rusty or loose anchoring, lack of grounding, wet spots, discoloration, leaks, distortion	Each operating day
	High Level Alarms	■ Malfunctioning siren/strobe light	Each operating day
	Volume Gauges	■ Disconnected, sticking, condensation	Each operating day

TABLE II.A.4(d)-1 - Continued

INSPECTION SCHEDULE

Area/Equipment	Specific Item	Types of Problems	Frequency of Inspection
Secondary Containment	Bottom and Walls	■ Cracks, debris, ponding, wet spots/stains, deterioration, displacement, leaks	Each operating day
	Self Closing Drain Valve	■ Open, leaks	Each operating day
	Rigid Piping and Supports	■ Distortion, corrosion, paint failures, leaks	Each operating day
Transfer Pumps and Hoses	Pumps Seals	■ Leaks	Each operating day
	Motors	■ Overheating	Each operating day
	Fittings	■ Leaks	Each operating day
	Valves	■ Leaks, sticking	Each operating day
	Hose Connections and Fittings	■ Cracks, loose, leaks	Each operating day
	Hose Body	■ Crushed, cracked, thin spots, leaks	Each operating day
Return and Fill Station	Wet Dumpster	■ Excess sediment build-up, leaks, rust, split seams, distortion, deterioration, excess debris	Each operating day
	Secondary Containment	■ Excess sediment/liquid, leaks, deterioration, distortion, excess debris, cracks	Each operating day
	Loading/Unloading Area	■ Cracks, pondings/wet spots	Each operating day
Container Storage Area	Total Volume in Storage	■ Exceeds permitted limit	Each operating day

TABLE II.A.4(d)-1 - Continued

INSPECTION SCHEDULE

Area/Equipment	Specific Item	Types of Problems	Frequency of Inspection
	Condition of Drums	■ Missing or loose lids; labels missing, incomplete or incorrect; rust, leaks, distortion	Each operating day
	Stacking/Placement/ Aisle Space	■ Containers not on pallets, unstable stacks, inadequate aisle space	Each operating day
Secondary Containment	Curbing, Floor and Sump	■ Ponding/wet spots, deterioration, displacement, leaks, other	Each operating day
	Loading/Unloading Area	■ Cracks, deterioration, ponding/wet spots	Each operating day

d. Examine the tank and container storage areas to verify that all container identification, dates, loading data, hazardous waste labels are attached and current.

e. Containment areas to detect signs of deterioration and failure of the containment system such as cracks, breakage, settlement, and spillage.

f. Container placement and stacking such as aisle space, height, and stability of stacks.

5. Daily inspections of aboveground tanks will also include the following:

a. Check the automatic high level alarm. In addition, measure the depth of used solvent in the tanks to confirm the proper functioning of the automatic alarm system and to determine unexpected deviations in tank measuring data, or a sudden drop in liquid level, which may indicate leakage.

b. Inspect the solvent dispensing hose, connections, and valve for any leaks, damage, or wear that could cause a leak to develop.

c. Inspect the valves for proper seat. Stem leaks from worn glands and warped valve bodies should be repaired. If the valve cannot be repaired, replace the unit.

d. Pumps should be inspected for packing leaks and cool, quiet operation.

6. The tanks will be visually inspected and tested periodically. Every five years, a general structural inspection, hydraulic test of the tank, internal inspection, and wall thickness inspection will be made.

   This inspection and testing will involve withdrawal of contents, a squeegee cleaning, visual inspection, and performance of hydrostatic pneumatic or other leak detection tests in accordance with the tank manufacturer's instructions. Frequency and method of future inspection and testing will be determined based upon results of prior evaluations.

7. Daily inspection of the solvent return receptacle (wet dumpster) will consist of the inspection for leaks and excess dumpster mud build-up.

Inspection of Emergency and Spill Control Equipment

1. The purpose of the inspection plan is to establish a procedure and schedule for the systematic monitoring and inspection of emergency and spill control equipment to ensure proper operation and to maintain compliance.

2. The Branch Manager or his designee will be responsible for carrying out the inspection in accordance with the following procedure and schedule.

   a. A weekly inspection of fire extinguishers must be performed to ensure that the tag date has not expired and the units are properly charged and accessible. The unit must be inspected by a fire service supplier on a yearly basis.

   b. A weekly inspection of eye wash stands must be performed to assure accessibility; check for proper operation of this equipment on a monthly basis. Inventory of the first-aid kit must be checked on a weekly basis.

c. A weekly check of the supply of spill control equipment (absorbent material) must be performed.

d. A weekly check of the conditions and inventory of other emergency equipment will be made. This includes gloves, aprons, goggles, respirators, and other personal protective equipment.

Inspection of Transportation Equipment

1. The purpose of this inspection plan is to establish a procedure and schedule for the systematic monitoring and inspection of the route trucks which travel between the customers and the service center to ensure proper operation and safety of the equipment.

2. The Branch Manager or his designee will be responsible for daily inspection of each route vehicle to ensure the proper operation of brakes, lights, turn signals, emergency flashers, and wipers. Trucks dispatched from the recycle center should also be noted for their operation.

3. Daily inspection for safety equipment such as sorbent, eyewash, fire extinguisher, first-aid kit, and reflector kits on the route vehicles must be performed.

4. Any equipment that is inoperative or unavailable shall be immediately repaired or replaced.

Corrective Action

Any discrepancies or deficiencies found during the routine inspection must be corrected on a most expedient basis to ensure that the problem does not lead to an environmental or human health hazard. Where a hazard is imminent or an accident has already occurred, remedial action must be taken immediately. The Branch Manager of the

service center has the overall responsibility for resolving any discrepancies found during the routine inspection.

Available Equipment and Communication

Due to the small size of the facility, routine communication is accomplished by voice communication. However, an audible alarm is available for emergencies. Telephones will be used in case of a spill or fire emergency to summon outside assistance. Emergency numbers will be posted by each phone in the facility. Included with these phone numbers will be the 24-hour spill number for the Corporate Environmental Department at the corporate office in Elgin, Illinois. See Figure II.A.4(d)-1 for proposed locations of telephones, fire extinguishers, alarms, and the emergency eye washes. These locations are proposed and are subject to change during construction. Other emergency response equipment (Table II.A.4(d)-2) will be kept in a small storage area inside the warehouse near the return/fill dock. This equipment will include mops and buckets, soap, towels, shovels, and spill sorbent pads. Rubber gloves, boots, pumps, and a wet/dry vacuum cleaner will be stored in an emergency supply area near the container storage area. Adequate aisle space will be provided in the drum storage areas for movement in an emergency situation. The city of Medley will be supplying water for domestic use, decontamination, and fire fighting. The exact water pressure and volume has not been determined at this time. The fire protection system will be installed and certified by the installation contractor in accordance with applicable fire codes.

Pails, hoses, and detergent are the primary equipment that will be used for decontamination.

The equipment available at the facility for emergency situations will be adequate for most cases. Large or serious emergency situations will be remediated by local emergency response teams or special emergency response or cleanup contractors. The facility will be constructed and operated in accordance with National Fire Protection Association

Figure II.A.4(d)-1
Location of Emergency Equipment
Safety-Kleen Corp. Facility
Sanford, Florida

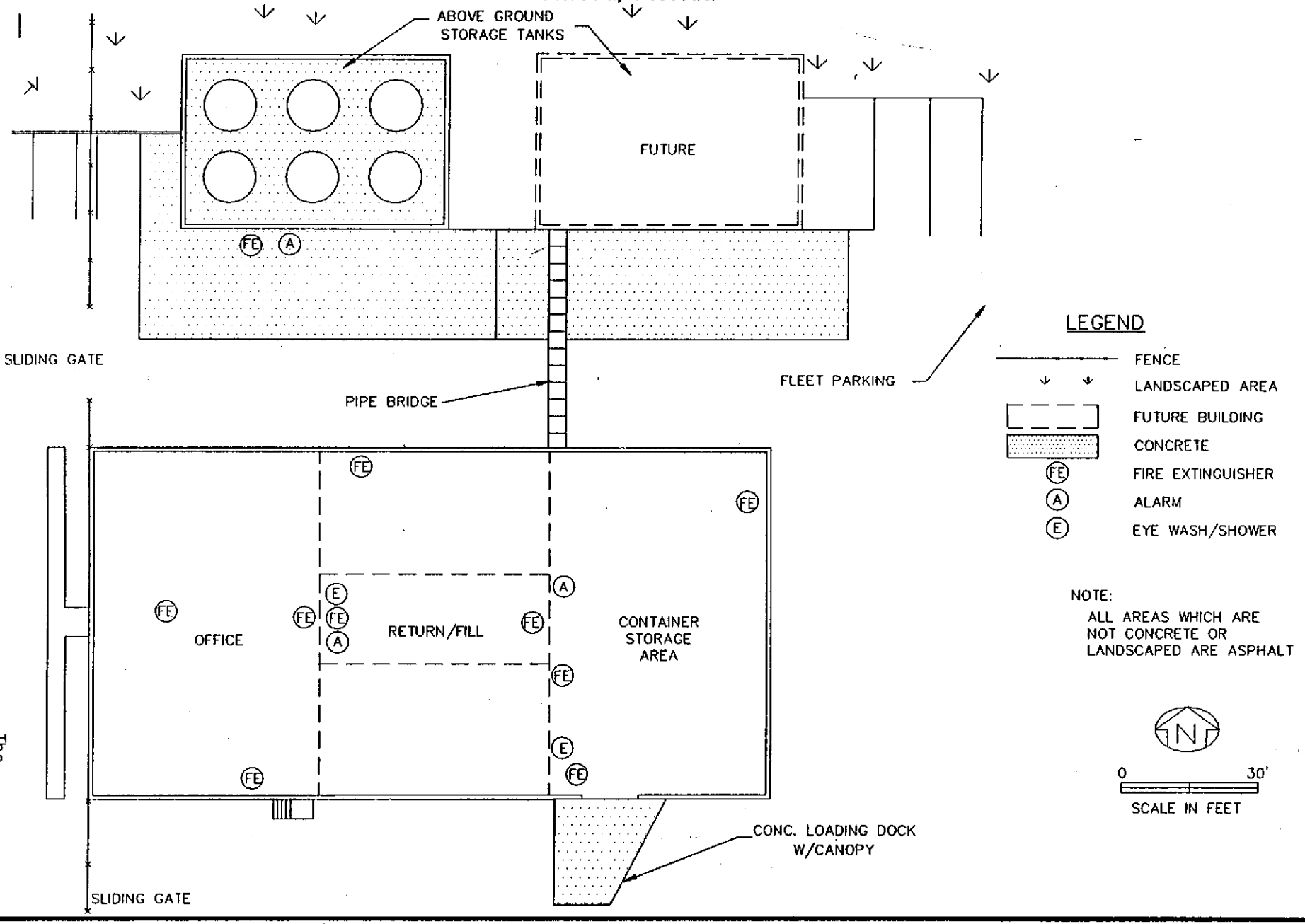

13112.22/31122LEE/061491

II.A.4(d)-5A

The ERM Group ®

TABLE II.A.4(d)-2

EMERGENCY RESPONSE EQUIPMENT

Description	Type/Capacity	Location	Quantity
Fire Extinguisher	ABC (10 lb)	Container Storage Area	9
Fire Extinguisher	ABC	Tank Storage Area	1
Eyewash	Fountain	Container Storage Area	1
Eyewash	Fountain	Return/Fill Shelter	1
First-Aid		Container Storage Area	1
Telephones	Standard	Manager's Office	1
Telephones	Standard	Secretary's Desk	1
Telephones	Standard	Container Storage Area	2
Gloves	Rubber	Emergency Equip. Area	Min. 3
Boots (optional)	Rubber	Emergency Equip. Area	Min. 1
Protective Clothing	Apron	Emergency Equip. Area	Min. 3
Eye Protection	Goggles/Safety Glasses	Emergency Equip. Area	Min. 3
Sorbent Material	Oil Absorbing	Emergency Equip. Area	Min. 1 bale
Shovel	Standard	Emergency Equip. Area	Min. 1
Mop and Bucket	Standard	Emergency Equip. Area	Min. 1
Pump	Hand-held, Electric	Emergency Equip. Area	Min. 1
Wet/Dry Vacuum	Portable, Electric	Emergency Equip. Area	1
Empty Containers for Over Pack	30, 55, and 85 gallons	Container Storage Area	9
Alarm	N/A	Tank Storage Area	1
Alarm	N/A	Container Storage Area	1
Alarm	N/A	Return/Fill Shelter	1

(NFPA) standards and applicable local ordinances. Applicable health and safety standards also will be observed at the facility. A recent air quality survey conducted by an independent industrial hygienist at the Los Angeles service center has shown that air quality at a typical facility is within Threshold Limit Values (TLV) as specified by OSHA and local air pollution control criteria; no respirator or special protection unit is deemed mandatory.

External Factors

The design of the installation is such that a harmful spill is highly unlikely to occur from most external factors. The storage tanks will be inaccessible to non-Safety-Kleen personnel. Also, the container storage areas will be in buildings which will be inaccessible to unauthorized personnel.

a. Vandalism - Only extreme vandalism would result in a solvent spill or fire. Responses to spills and fires are described in the contingency plan.

b. Strikes - A strike would not result in a solvent spill or fire.

c. Power Failure - A power failure would not result in a spill or fire. Should a power failure occur, all activities requiring electricity will cease.

d. Flooding - The waste management facility elevation is above the projected 100-year flood plain; therefore, a 100-year flood will not affect the facility.

e. Storms or Cold Weather - The solvent return and fill station, tank storage, and the container storage areas are roofed to eliminate the possibility of rain entering the waste management areas. Neither snow, cold weather, nor stormwater is expected to affect the facility.

Containment Systems

Containerized Wastes

All containers will be stored in the container storage area. The storage area will be totally contained by a concrete floor and container area's four walls (Figure II.A.4(d)-2). The containment system will be free of cracks and coated with a concrete sealer that will be compatible with and resistant to chemicals stored at this facility. The coating to be used is currently under selection. All containers will be stored on pallets.

The floor will have a two-inch inward slope (four sides) that will direct a spill toward the collection trench located in the center of the room (Figure II.A.4(d)-2). Six openings (doorways) in the containment area will exist. Four of these will lead to other containment areas; the container fill/return and the enclosed concrete dock. The other two openings (doorways) will be located on the west side of the containment area behind a locked chain link fence. All openings (doorways) will be normally closed. Due to the volume of containment that will be available and the configuration of the containment area, it is highly unlikely that any spill would extend beyond this area.

In the container storage area, containers will be handled with a hand-truck free of sharp points and stacked by hand. Every time a container is moved, a chance exists that it will be tipped over, dropped, or punctured. To minimize the possibility of spillage, containers will be tightly covered and kept in an upright position. A small portable electric pump will be available to quickly transfer the liquid from any leaking container into another drum. Each route truck will be equipped with an electric hoist. This hoist will be used in the loading/unloading operation to minimize chances for spillage and/or employee injury. Trucks used for shipping containers between the recycle center and service center have lift gates for container loading/unloading. With the exception of mineral spirits, all containerized wastes will be loaded/unloaded in the vicinity of the enclosed concrete dock the northwest side of the building (Figure II.A.4(d)-3).

FIGURE II.A.4(d)-2
Container Storage Location
Safety-Kleen Corp. Facility
Medley, Florida

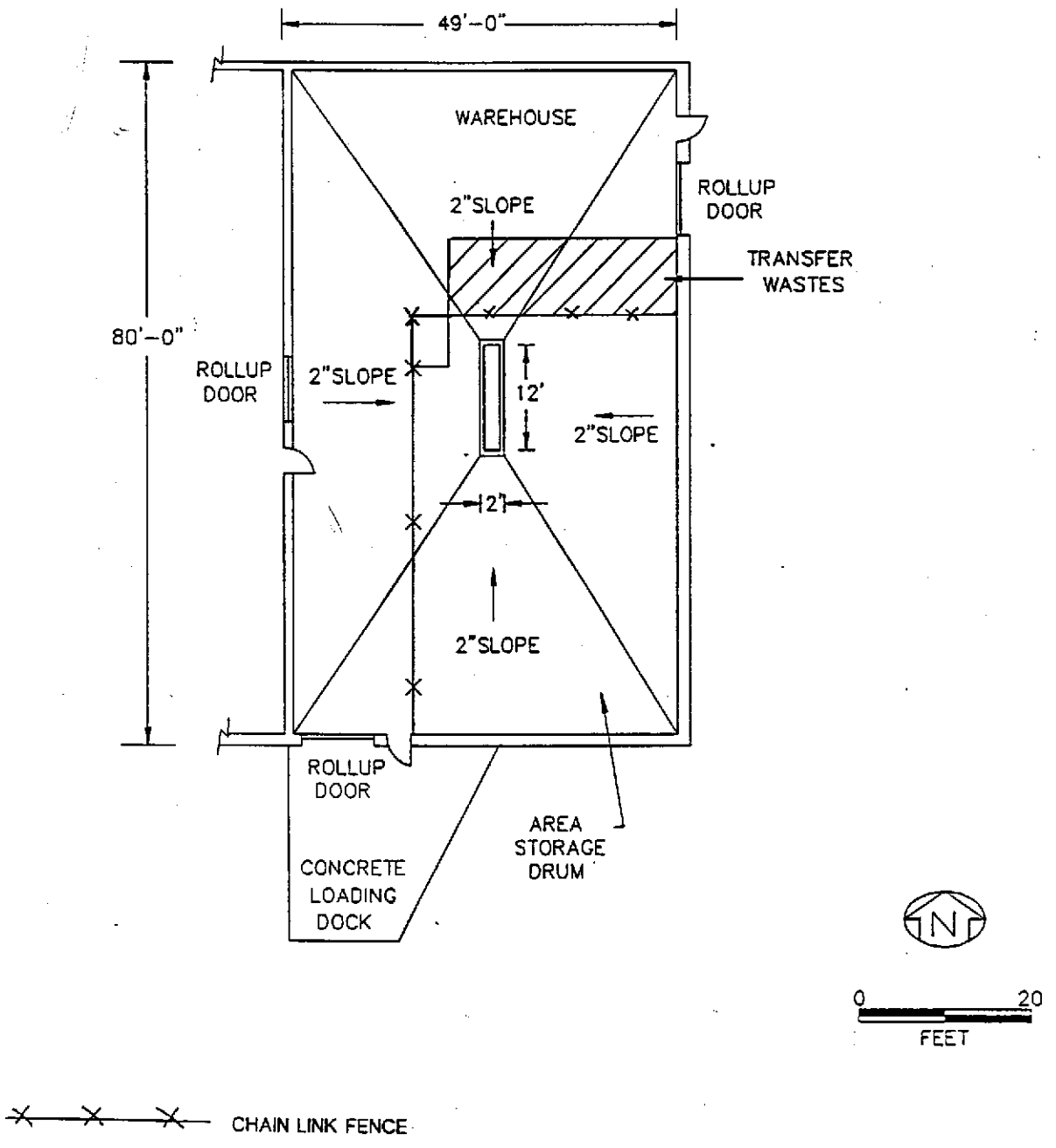

Figure II.A.4(d)-3
Loading/Unloading Locations
Safety-Kleen Corp. Facility
Medley, Florida

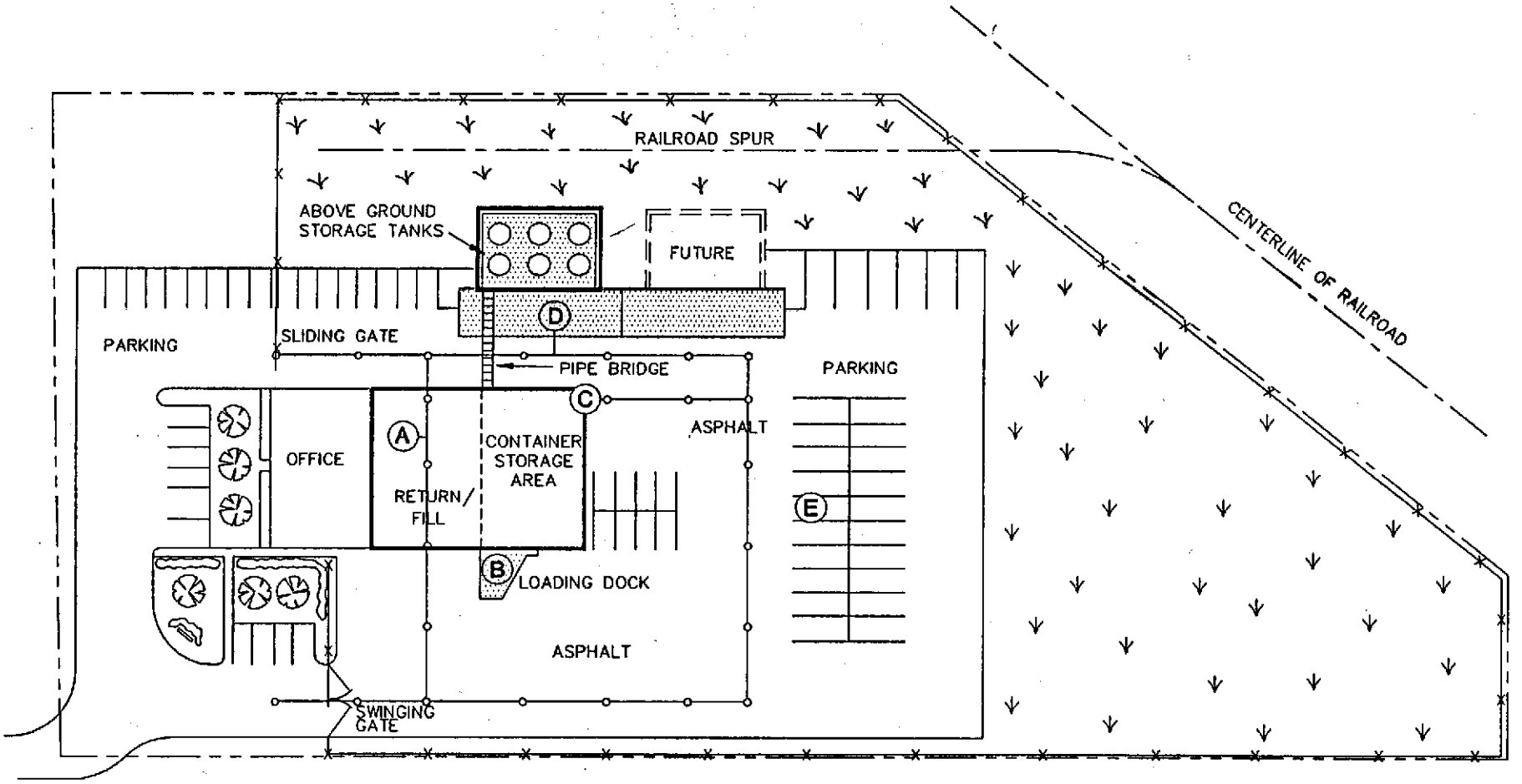

LEGEND

HAZARDOUS WASTE MANAGEMENT AREAS

ENTRANCE/EXIT ROUTE

(A) MINERAL SPIRIT DRUM DUMP/BARREL WASH/REFILL

(B) LOADING & UNLOADING OF DRUMS CONTAINING SOLVENTS FROM TRUCKS

(C) LOADING & UNLOADING OF CONTAINERIZED WASTE FROM LOCAL AREA VANS & TRUCKS

(D) LOADING & UNLOADING OF MINERAL SPIRITS AND ETHYLENE GLYCOL

(E) TRUCK TO TRUCK TRANSFER OF FRS WASTES
NOTE: THIS OCCURS ON ANY ASPHALT SURFACE EAST OR SOUTH OF THE WAREHOUSE

N

0 80
FEET

The ERM Group ®

Because these areas will be fully enclosed, spills originating in these areas should not come in contact with stormwater.

All containers will be covered during movement and will be located within diked, concrete floored areas to contain any potential spill. The small quantities of waste onsite at any time can be cleaned up immediately through the use of hand-held electric pumps, mops, wet/dry vacuums, or sorbent materials, should a spill occur. Any spilled waste will be contained for offsite recycling/reclamation.

All containerized waste movement will be performed manually, by a pallet jack, or forklift truck. Therefore, power outages are not expected to threaten employee safety.

Container Fill/Return Area

The container fill/return area will be located in the service center building between the office and container storage areas. A slight, nondetectable slope (three inches) exists, which will terminate at the central collection trench (approximately 22' long, 2'1" wide, and 2' deep). A 20-foot wide steel grate dock (approximately 33 inches above the floor) will be located perpendicular to the trench and extend the full width of this area (Figure II.A.4(d)-4). The concrete floor in this area will be coated with a concrete sealer that will be compatible with and resistant to chemicals handled in this area. The coating to be used is currently under selection. Any spill which might occur on the concrete floor would be directed, by gravity, into the collection trench. Any residual remaining on the floor can be cleaned up immediately through the use of mops, wet/dry vacuums, or sorbent materials, should a spill occur. Spilled waste will be contained and sent for recycling/reclamation. Doors in this area include four overhead roll-up doorways for trucks entering/exiting the service building, two personnel doorways for employees entering/exiting the service building, one overhead doorway connecting the container fill/return area and container storage area (warehouse), one doorway connecting the container fill/return area and the container storage area, and one doorway connecting the

Figure II.A.4(d)-4
Return/Fill Shelter
Safety-Kleen Corp. Facility
Medley, Florida

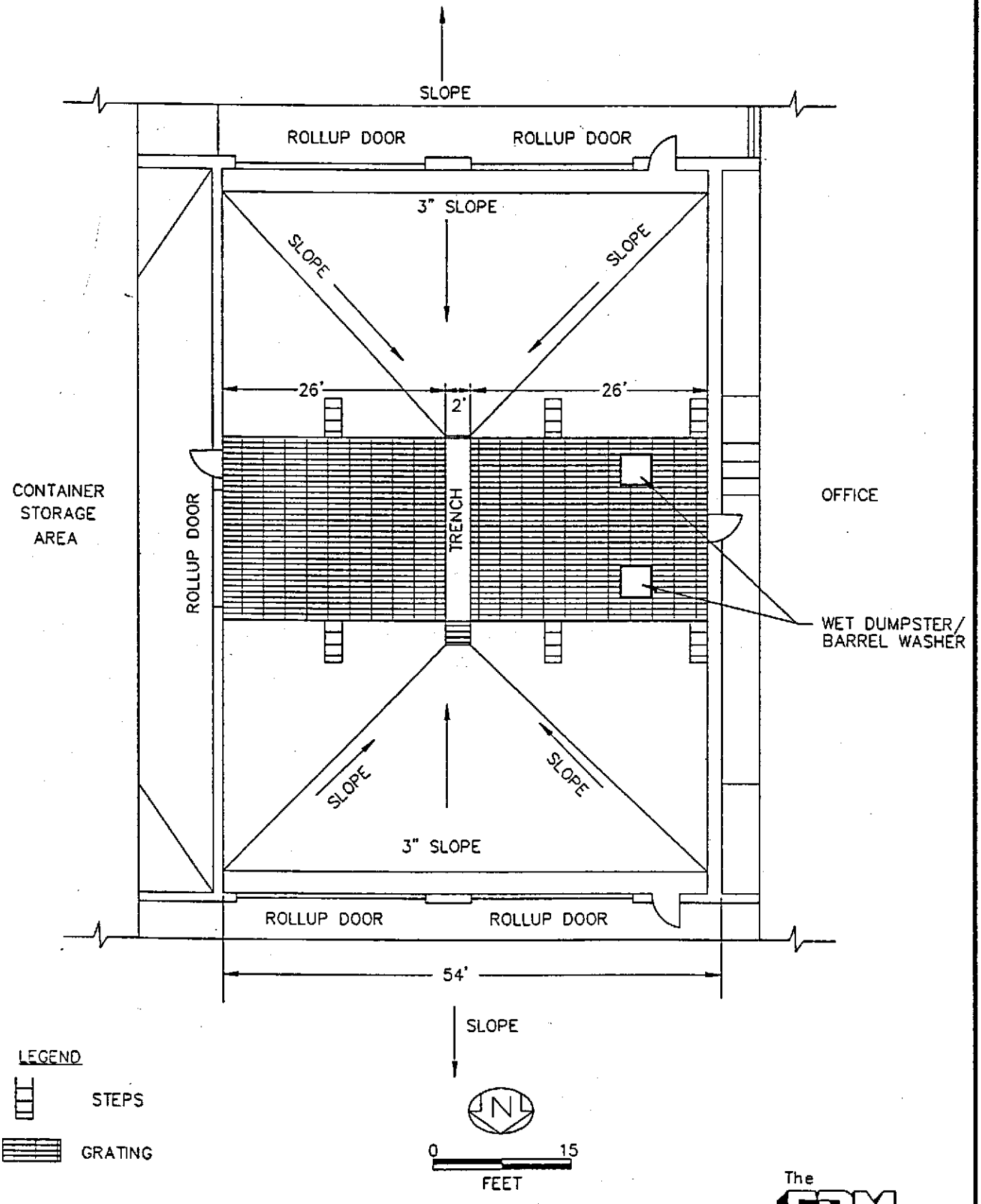

The ERM Group

Figure II.A.4(d)-5
Tank Farm
Safety-Kleen Corp. Facility
Medley, Florida

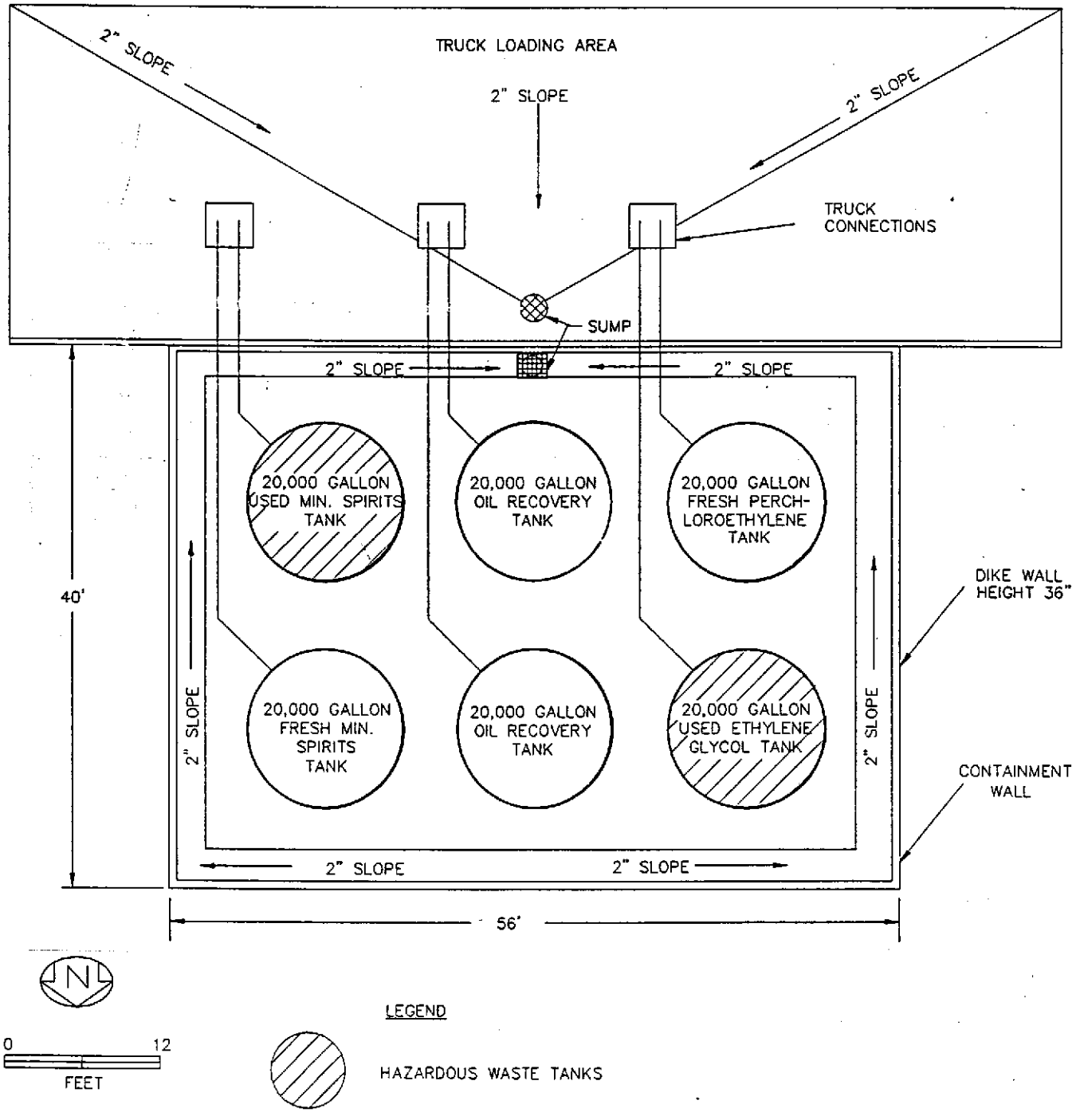

NOTE: ENTIRE AREA IS CONCRETE

container fill/return area and the offices. The office floor and the container storage area floor will be approximately 33 inches above the container fill/return area floor, and will be flush with the steel grate dock. Therefore, spills originating in the container fill/return area will go into the sump beneath the grate in the return/fill area and will not flow into these areas. Based on the capacity of the container fill/return collection trench and sloped floor, it is extremely unlikely that a spill would escape through the overhead doorways or two doorways entering/exiting the service building. The area just outside the service building container fill/return area will be asphalt covered.

Because the container fill/return area will be fully enclosed and the pavement outside this area is sloped to carry water away from the building, spills originating in this area should not come in contact with stormwater.

Tank Area

The tank area (Figure II.A.4(d)-5) is provided with secondary containment. This containment area will not be sloped. Any spilled material will be removed by pump or wet vacuum. The tanks loading/unloading area will be a concrete pad. This concrete pad will have a slight slope directed to a sump. Rainwater that has accumulated in the sump will be pumped into the waste mineral spirits tank via the wet dumpsters. Any spills which occur on the pad will be cleaned up and the area decontaminated. Decontamination methods are addressed in the Contingency Plan (Attachment II.A.4(b)). Any contaminated liquids collected in the sump will be pumped into the appropriate tank for proper disposal. This decontamination results in de minimus residue remaining.

Employee training will emphasize the importance of inspection, maintenance, personal safety, and reporting of conditions with pollution incident potential. This training, coupled with the Safety-Kleen's containment system and immediate cleanup of any spills, will eliminate or greatly minimize the chance of contamination of ground water and/or surface water in the vicinity of the site. In addition, surface run-off at the site will not come in contact with stored products in the waste management area.

Ignitable Wastes

All wastes and products are kept away from ignition sources--Personnel must confine smoking and open flames to remote areas, separate from any solvent (e.g., the office or locker room). The mineral spirits and paint waste handling areas will be separated from the office area to minimize the potential for a fire to spread or injury to personnel to occur.

The tank farm will be more than 20 feet from the property line. Likewise, the flammable storage area will be 50 feet or more from the property line. Both of these distances meet the NFPA code for storage of ignitable materials.

Ignitable wastes will be handled so that they do not:

1. Become subject to extreme heat or pressure, fire or explosion, or a violent reaction--The mineral spirits and paint wastes will be stored in a tank or in drums, none of which will be near sources of extreme heat, fire, potential explosion sources or subject to violent reactions. The tanks will be vented and the containers kept at room temperature to minimize the potential for pressure build up. The tanks will be painted white to reflect sunlight and will be vented to prevent pressure buildup.

2. Produce uncontrolled toxic mists, fumes, dusts, or gases in quantities sufficient to threaten human health--The vapor pressure of mineral spirits is low (2 mm

mercury). Mineral spirits and the paint waste may react with strong oxidizers. Toxic mists, fumes, dusts, or gases will not form in quantities sufficient to threaten human health since strong oxidizers will not be handled at this facility and the solvent vaporization will be minimal under normal working conditions.

3. Produce uncontrolled fires or gases in quantities sufficient to pose a risk of fire or explosion--See "1" above and "4" below.

4. Damage the structural integrity of the Safety-Kleen facility--The mineral spirits and paint wastes will not cause deterioration of the tank, drums, or other structural components of the facility.

Incompatible Wastes

Reactive and/or incompatible waste will not be handled at the facility. All waste or products will be kept away from ignition sources. Employees must confine smoking or open flames to designated safe areas.

Materials will be handled so they do not:

a. Generate extreme heat or pressure, fire or explosion, or violent reaction.

b. Produce uncontrolled toxic mists, fumes, dusts, or gases in sufficient quantities to threaten human health.

c. Produce uncontrolled fires or gases in sufficient quantities to pose a risk of fire or explosion.

d. Damage the structural integrity of the Safety-Kleen facility.

Adequate aisle space will be maintained to allow unobstructed movement of personnel, fire protection equipment, and decontamination equipment to any area of the facility operation in an emergency.

RESPONSIBILITY FOR PREPAREDNESS AND PREVENTION PLAN

The preparedness and prevention plan, as well as the training of employees for its implementation, will be the responsibility of the Branch Manager with assistance from corporate staff. The detailed training program is described in the Personnel Training Plan (Attachment II.A.4(e)).

ATTACHMENT II.A.4(e)

TRAINING PROGRAM

ATTACHMENT II.A.4(e)
PERSONNEL TRAINING

This section of the permit application describes Safety-Kleen's corporate training program. Training plan outlines, job descriptions, training content, frequency and techniques are described as well as the implementation of the training program. All positions described herein may not be present at all facilities.

The purpose of Safety-Kleen's training program is to familiarize employees with environmental regulations, records, and emergency procedures so they can perform their jobs in the safest and most efficient manner possible.

DESCRIPTION OF TRAINING PROGRAM

Each employee is trained to operate and maintain the service center safely, and to understand hazards unique to his job assignment. New Branch Managers (Resource Recovery Branch Manager) and new Branch Facility managers must complete a formal introductory training program before starting their jobs, with annual review and update thereafter. New Sales Representatives must be trained prior to unsupervised customer visits. All other hazardous waste employees must undergo a combination of videotape and on-the-job training within six months of starting.

OUTLINE OF TRAINING PROGRAM

An outline of the training program, given both initially and annually to employees who manage or handle hazardous waste at the Service Center is presented in Table IIA.4(e)-1.

JOB TITLE/JOB DESCRIPTION

Job descriptions for employees who would be expected to manage or handle hazardous wastes, including the Branch Manager (Resource Recovery Branch Manager), Branch

TABLE II.A.4(e)-1

INTRODUCTORY AND CONTINUING TRAINING TOPICS FOR SERVICE CENTER EMPLOYEES

- Environmental Regulation Update
- Part A Application
- Waste Analysis Plan
- Preparedness and Prevention Plan
- Contingency Plan and Emergency Procedure
- Training
- Closure
- Inspections
- Manifesting
- Spill Simulation and Spill Reports

Facility Manager, Branch Automotive Manager, Branch Industrial Manager, Branch Secretary (paperwork only), Sales Representatives, and Warehousemen are provided in Tables II.A.4(e)-2 through II.A.4(e)-8.

TRAINING CONTENT, FREQUENCY, AND TECHNIQUES

Employee training is accomplished using classroom, videotape, written, and on-the-job methods. The Environment Health and Safety (EHS) Department of Safety-Kleen's Corporate Office prepares a training program for employees and they must provide documentation that the program has been executed. An employee is trained prior to starting or as soon as he or she begins working, (depending on his or her position), and is trained annually thereafter.

The following presents the specific training requirements for new Safety-Kleen employees who will manage or handle hazardous waste.

Training of New Branch Managers: New Branch Managers are trained for several weeks before they begin their new positions. This training is given both on the job and in the classroom. During this training, the new manager reviews all environmental records and learns the recordkeeping requirements. These records include: manifests, personnel records, training records, service center inspection records, and spill reports. At least eight hours of this initial training consists of an introduction to environmental law and a review of the Part B, including the Waste Analysis Plan, Preparedness and Prevention Plan, Contingency Plan, Training Plan, and Closure Plan.

The training culminates in four weeks of training at his new service center, at least one day of which is devoted to environmental training with the Regional Environmental Engineer. Additional time is spent reviewing past environmental compliance at the Branch Manager's service center, the regulations unique to his state are discussed as well.

TABLE II.A.4(e)-2

JOB DESCRIPTION
RESOURCE RECOVERY BRANCH MANAGER

JOB DESCRIPTION:

The Resource Recovery Branch Manager has overall responsibility for the facility operations and maintenance, and directs sales activities within a certain geographic area defined by the corporate Marketing Department. He is responsible for the proper operations and profitability of the service center.

REPORTS TO:

Regional Manager of Sales

QUALIFICATION:

Minimum high school graduate with Safety-Kleen sales experience

PRINCIPAL RESPONSIBILITIES:

1. Plan, direct, and monitor activities of Sales Representatives.
2. Training of branch facility managers, sales representatives, and other branch personnel.
3. Assist or accompany sales representatives during their sales activities when necessary.
4. Tabulate daily sales and inventory figures and report them to the corporate offices.
5. Maintain adequate inventory of solvents, allied products, and equipment.
6. Carry out corporate policies and standards regarding facilities, equipment operation and maintenance.
7. Ensure the regular inspection of the facility and equipment and the implementation of any necessary repairs or remedial actions.
8. Represent Safety-Kleen Corp. in local community affairs and public relations activities.
9. Coordinate with corporate Technical Services and EHS Departments and implement necessary actions or plans for Regulatory compliance.
10. Be able to act as the primary emergency response coordinator.

TABLE II.A.4(e)-3

JOB DESCRIPTION
BRANCH FACILITY MANAGER

JOB DESCRIPTION:

Assures branch facility compliance with the Federal and State Environmental Protection Agencies (EPA), the Occupational, Safety and Health Administration (OSHA), the Department of Transportation (DOT), the Department of Labor (DOL) and other regulating agencies. Protects Company assets by implementing corporate systems to accurately monitor and track inventory, fleet safety conditions, and accuracy of documents.

REPORTS TO:

Branch Manager

QUALIFICATION:

Minimum high school graduate with Safety-Kleen route sales experience

PRINCIPAL RESPONSIBILITIES:

1. May function as the Emergency Response Coordinator for the facility.
2. Maintains a minimum FMIR score of 90.
3. Works with Technical Services and Environmental Department to correct problems in the facility or to enhance the facility to meet new demands.
4. Assures branch compliance related to the preparation and completion of hazardous waste paperwork and proper branch procedures for management and shipment of hazardous wastes.
5. Performs weekly/daily facility inspections.
6. Maintains and updates the Contingency Plan.
7. Maintains accurate records, including personnel training files.
8. Implements the Hazard Communication Standard ("Right-to-Know").
9. Implements a Respirator Protection Program.

TABLE II.A.4(e)-3 - Continued

JOB DESCRIPTION
BRANCH FACILITY MANAGER

10. Conducts Health and Safety Meetings.

11. Assures all necessary personnel are DOT certified.

12. Assures all vehicles are in compliance.

13. Performs weekly/daily fleet inspections.

TABLE II.A.4(e)-4

JOB DESCRIPTION
BRANCH AUTOMOTIVE MANAGER

JOB DESCRIPTION:

Develops and maintains automotive account business by presenting and providing the complete Automotive Fluid Recovery Service to customers in assigned territories. Trains, motivates, and controls the automotive sales staff within the assigned territories.

REPORTS TO:

Directly to the Resource Recovery Branch manager and indirectly to Regional Automotive Sales Manager. All Automotive and Oil Sales Representatives within assigned territories report directly to the BAM. In branches without a BFM, one or more Branch Secretaries report to the BAM, as assigned by the Resource Recovery Branch Manager.

QUALIFICATION:

Minimum high school graduate with above average Safety-Kleen route sales experience. Applicant should exhibit leadership abilities and be self-motivated, and pass Company testing.

PRINCIPAL RESPONSIBILITIES:

1. Markets and sells the total Automotive Fluid Recovery Service.
2. Signs automotive accounts to the Safety-Kleen Service Contract and Oil agreements where applicable.
3. Ensures that customers have the right kind of equipment which is properly labeled, and on the appropriate service interval, by completing machine condition reports.
4. Ensures that the Company's ethical standards are maintained.
5. Reviews weekly and period sales production summaries.
6. Ensures the timely completion of services.
7. Reviews and acts on accounts receivable standards.
8. Assures proper completion and administration of hazardous waste paperwork.

TABLE II.A.4(e)-4 - Continued

JOB DESCRIPTION
BRANCH AUTOMOTIVE MANAGER

9. Assures proper management, preparation, and shipment of hazardous waste (including packaging, placarding, transportation, and storage procedures).

10. Assures DOT compliance.

11. Trains personnel following the *Corporate Training 10-Day Action Plan.*

12. Conducts sales meetings.

13. Oversees career development by conducting selling skills training meetings (in conjunction with ASM).

14. Conducts health and safety meetings.

15. Develops team contests or rewards for set period objectives.

16. Develops rewards for achieved objectives.

17. Holds monthly goal setting sessions with assigned personnel.

18. Conducts quarterly performance reviews with assigned personnel.

19. Controls all personnel within the assigned territories by daily/weekly communication in regards to branch standards and goals.

TABLE II.A.4(e)-5

JOB DESCRIPTION
BRANCH INDUSTRIAL MANAGER

JOB DESCRIPTION:

Develops and maintains industrial account business by presenting and providing the complete Industrial Fluid Recovery Service to customers in assigned territories. Trains, motivates, and controls the industrial sales staff within the assigned territories.

REPORTS TO:

Directly to the Resource Recovery Branch Manager and indirectly to Regional Industrial Sales Manager. All Industrial Sales Representatives within assigned territories report directly to the BIM. In branches without a BFM, one or more Branch Secretaries report to the BIM, as assigned by the Resource Recovery Branch Manager.

QUALIFICATION:

Minimum high school graduate with above average Safety-Kleen route sales experience. Applicant should exhibit leadership abilities, be self-motivated, and pass Company testing. Good reading and letter writing skills are also required.

PRINCIPAL RESPONSIBILITIES:

1. Ensures that customers have the right kind of equipment which is properly labeled, and on the appropriate service interval, by completing machine condition reports.

2. Ensures that the Company's ethical standards are maintained.

3. Performs the required amount of cold calls, sample processing, and machine placements.

4. Reviews weekly and period sales production summaries.

5. Ensures the timely completion of services.

6. Reviews and acts on accounts receivable standards.

7. Assures proper completion and administration of hazardous waste paperwork.

TABLE II.A.4(e)-5 - Continued

JOB DESCRIPTION
BRANCH INDUSTRIAL MANAGER

8. Assures proper management, preparation, and shipment of hazardous waste (including packaging, placarding, transportation, and storage procedures).

9. Assures DOT compliance.

10. Trains personnel following the *Corporate Training 10-Day Action Plan.*

11. Conducts sales meetings.

12. Oversees career development by conducting selling skills training meetings (in conjunction with ISM).

13. Conducts health and safety meetings.

14. Develops team contests or rewards for set period objectives.

15. Develops rewards for achieved objectives.

16. Holds monthly goal setting sessions with assigned personnel.

17. Conducts quarterly performance reviews with assigned personnel.

18. Controls all personnel within the assigned territories by daily/weekly communication in regards to branch standards and goals.

TABLE 11.A.4(e)-6

JOB DESCRIPTION
BRANCH SECRETARY

JOB DESCRIPTION:

Performs duties to assist the branch manager, sales representatives, and customers with billing, scheduling, and recordkeeping. Performs secretarial duties at the branch.

REPORTS TO:

Branch Manager

QUALIFICATION:

Attended high school

PRINCIPAL RESPONSIBILITIES:

1. Maintain records in an orderly manner.
2. Assist sales representatives in scheduling services.
3. Ensure that all hazardous waste manifests are complete, and manage distribution and filing of copies.
4. Maintain Personnel Training Record files.
5. Maintain Facility Inspection Records.
6. Answer customer inquiries.
7. Manage customer billing.
8. Perform other related duties as assigned.

TABLE II.A.4(e)-7

JOB DESCRIPTION
SALES REPRESENTATIVE

JOB DESCRIPTION:

The Sales Representative is charged with the responsibility of generating new business and servicing established accounts within a certain defined geographic area.

REPORTS TO:

Branch Automotive Manager or Branch Industrial Manager

QUALIFICATION:

Minimum high school graduate

PRINCIPAL RESPONSIBILITIES:

1. Maintain his route truck and replenish his products on the truck before beginning his route sales.

2. Contact potential customers for the purpose of selling Safety-Kleen services and allied products.

3. Exchange used solvents with fresh solvent and replenish the inventory of Safety-Kleen's products for existing customers.

4. Make minor repairs of Safety-Kleen's parts washer equipment or lease new equipment to the customer.

5. Prepare the necessary paperwork for each service, and bill or credit the customer, as necessary.

6. At the end of each day, return the truck to the branch for cleaning and maintenance, and summarize the day's activities so the Branch Manager can tabulate the daily figures and forward them to the corporate office.

TABLE II.A.4(e)-8

JOB DESCRIPTION
WAREHOUSE PERSONNEL

JOB DESCRIPTION:

Perform duties to assist the sales representatives in loading and unloading the trucks. Perform janitorial duties at the warehouse.

REPORTS TO:

Branch Manager

QUALIFICATIONS:

Attended high school

PRINCIPAL RESPONSIBILITIES:

1. Maintain warehouse in clean and orderly manner.
2. Assist sales representatives in loading trucks and replacing solvent.
3. Refurbish drums as needed.
4. Park or move trucks as needed.
5. Stock inventory.
6. Replenish trucks with inventory.
7. Perform other related duties as assigned.

Training of New Branch Facility Managers: Branch Facility Managers report to Branch Managers and are responsible for administrative operations at branches. New Branch Facility Managers are trained for 12 weeks before they begin their new positions. This training is both on location and in classroom modes. While being trained at the branch at which he or she will be stationed, a new Branch Facility Manager reviews all environmental records and learns the recordkeeping and inspection requirements. These records include: manifests, personnel records, training records, service center inspection records, and spill reports.

Three weeks of training take place at Safety-Kleen's corporate headquarters. This training includes an introduction to environmental law (including the Resource Conservation and Recovery Act), health and safety issues, emergency response and inventory (including waste) reconciliation methods. Additional time is spent reviewing past environmental compliance at the Branch Facility Manager's site, the regulations unique to his or her state are discussed as well. The Branch Facility Manager may also be trained as the designee for performing the service center inspection.

Branch Automotive Managers and Branch Industrial Managers receive training similar to Branch Facility Managers as their job descriptions warrant.

Training of New Branch Secretaries: Branch secretaries are trained in the proper recordkeeping procedures as soon as they begin working for Safety-Kleen. While they are not usually responsible for preparing the documentation, they must check it for accuracy and completeness and then process or file it as required. Additional training is overseen by the Branch Manager and is done within six months of starting. This training is often presented in company-produced videotape presentations on emergency response, shipping documents (including manifests), drum labels, and other safety and environmental compliance issues. In addition, the Contingency Plan must be reviewed with the Branch Manager within the first two weeks of the Secretary starting work.

Training of New Sales Representatives: New Sales Representatives are trained ont he job for two weeks during which they are introduced to manifests, service center inspection records, and training records. A Sales Representative may also be trained as the designee for performing the service center inspection. Additional training is in the form of videotape presentations and a review of the Contingency Plan. The Contingency Plan must be reviewed with the Branch Manager before the Sales Representative formally begins his new position and annually thereafter.

Training of New Warehousemen: A warehouseman is trained to maintain the service center and assist the other branch employees in their tasks. He may be a designee for the service center inspection and must be trained by the Branch Manager as such. Within two weeks of the warehouseman's starting, the Branch Manager must review the Contingency Plan with him, and within six months he must review the items listed in the outline presented in Table II.A.4(e)-1.

Annual Training: On an annual basis, employees are trained using a program prepared and updated annually the EHS Department which contains the topics in Table II.A.4(e)-1. This training also includes updates on environmental regulations, an in-depth review of the Contingency Plan and a review of RCRA inspection criteria. This review is in the form of videotapes and a review and discussion of the storage service center permit/application. In addition, periodic memoranda on changes in environmental regulations are issued by the EHS Department and must be read and discussed by all branch personnel.

TRAINING DIRECTOR

The training is directed by Safety-Kleen's Environment, Health and Safety (EHS) Department which operates out of the Corporate Office in Elgin, Illinois. Each regional environmental engineer who works in this department is responsible for compliance of

the service centers in a given geographic area of the country. The EHS Department must:

- Provide a training program which addresses the requirements of environmental regulations and corporate policy;
- Notify the proper authorities, oversee remedial actions, and submit a written report to the state after an emergency situation has occurred;
- Assure that environmental permits are submitted and updated as required;
- Manage any environmental compliance issues which exceed the resources available at the service center level; and
- Participate in training new Branch Managers.

Qualifications for individuals that are members of the EHS Department and may conduct training at the Service Center are available upon request.

RELEVANCE OF TRAINING TO JOB POSITION

Each employee is trained to operate and maintain the service center safely and to understand hazards unique to the job assignment. Safety-Kleen's training programs are designed to give employees appropriate instruction regarding the hazardous waste management procedures they will encounter in performing their respective duties. Since the handling of hazardous materials is a large part of the operations of the service center, all employees are given training in environmental regulations, transportation regulations, the Preparedness and Prevention Plan, and Contingency Plan.

TRAINING FOR HAZARDOUS WASTE MANAGEMENT

As described previously, all employees are trained in the aspects of hazardous waste management which are relevant to their position. This includes job-specific hazards and necessary precautions, emergency response, and proper recordkeeping. This training is given initially and updated annually.

TRAINING FOR CONTINGENCY PLAN IMPLEMENTATION

All employees are trained in Contingency Plan implementation, through both initial training and yearly refresher courses, as summarized in Table II.A.4(e)-1. Employees are trained on the contents of the Contingency Plan as well as criteria for implementation.

TRAINING FOR EMERGENCY RESPONSE

All employees are trained in emergency response procedures, through both initial training and yearly refresher courses, as summarized in Table II.A.4(e)-1. The emergency training involves spill and fire prevention as well as remedial action procedures. Employees are also trained to recognize when evacuation and outside assistance may be necessary.

IMPLEMENTATION OF TRAINING PROGRAM

New Branch Managers, Branch Facility Managers, and Sales Representatives must complete an introductory training program discussed previously before starting their jobs, with annual review and update thereafter. Branch Secretaries and Warehousemen are given instruction on the Contingency Plan within two weeks of starting work, and are given the full hazardous waste training course, as outlined in Table II.A.4(e)-1, within six months of starting work. Warehousemen involved in direct handling of hazardous waste do not work unsupervised until they have completed the entire initial hazardous waste training course.

PERSONNEL TRAINING RECORD FORMS

Table II.A.4(e)-9 is a sample personnel training record form. This form, or one similar to it, will be used to record training. All training is documented and kept on file at the service center until closure. Additional forms may be used contingent upon the specific issue being addressed. All forms will show the training received, employee name, and the date of training.

TABLE II.A.4(e)-9

1560.____

ENVIRONMENT, HEALTH, & SAFETY TRAINING

TRAINING SUMMARY SHEET I

Branch Name :_____ Branch No. :_____

Employee Name :_____ Employee Number :_____

Hire Date :_____. 6 Mon. Training Compl. Date (target) :_____

Position / Title :_____ Termination Date :_____

** CORE HAZARDOUS MATERIALS TRAINING **

(Emergency Response Training must be completed before an employee works in an unsupervised position. Employees must be completely trained in all items listed below within six (6) months of starting and annually thereafter.)

TRAINING COMPLETED: DATE		MGR. INIT.
_____	EHS VIDEO PART I - HAZ COM - Safety Training	_____
_____	EHS VIDEO PART II - HAZ COM - Understanding MSDSs	_____
_____	EHS VIDEO PART III - Preventing Injuries & Illnesses	_____
_____	EHS VIDEO PART IV - Hazards Associated w/ Mat'ls Handling	_____
_____	EHS VIDEO PART V - Chemistry of Safety - Kleen Products	_____
_____	EHS VIDEO PART VI - Hazardous Materials Regulations	_____
_____	EHS VIDEO PART VII - Waste Analysis Plan	_____
_____	EHS VIDEO PART VIII - Prep., Prvn., & Contingency Plans	_____
_____	Day Four - TEN DAY TRAINING - HAZ MAT/DOT/MANFST VID QUIZ	_____
_____	Completion of New Employee Orientation Program	_____
_____	Initial Contingency Plan Training (incl. Part B review)	_____
_____	Respirator Fit Testing & Training	_____

** CERTIFICATION by the employee that training has been received obligates the employee to discharge his/her duties in accordance with the training provided. Failure to comply with the requirements established during the training program may result in civil or criminal penalties against the employee. **

12/31/91 Employee's Signature: _____

** CONTINUING TRAINING **

TABLE II.A.4(e)-9 (CONT.)

1560.____

ENVIRONMENT, HEALTH, & SAFETY TRAINING

TRAINING SUMMARY SHEET II

Branch Name :_____ Branch No. :_____

Employee Name :_____ Employee Number :_____

TRAINING COMPLETED:

DATE		MGR. INIT.

ATTACHMENT II.A.5

WASTE ANALYSIS REPORT

ATTACHMENT II.A.5
WASTE ANALYSIS REPORT

In accordance with U.S. EPA Hazardous Waste Regulations, eight types of hazardous waste have been identified for collection at the service center:

1. The used mineral spirits solvent, returned from customers in separate containers, transferred, and stored in the aboveground tank awaiting shipment to the recycle facility, is considered to be an Ignitable Waste (D001) and a characteristic waste by TCLP (D004, D005, D006, D007, D008, D009, D010, D011, D018, D019, D021, D022, D023, D024, D025, D026, D027, D028, D029, D030, D032, D033, D034, D035, D036, D037, D038, D039, D040, D041, D042, and D043).

2. The used chlorinated solvent #609 (old), returned from customers in separate containers and remain in the same container for shipment to the recycle facility, is considered to be a Listed Waste from Non-Specific sources (F002 and F004); and a characteristic waste by TCLP (D004, D005, D006, D007, D008, D009, D010, D011, D018, D019, D021, D022, D023, D024, D025, D026, D027, D028, D029, D030, D032, D033, D034, D035, D036, D037, D038, D039, D040, D041, D042, and D043).

3. The used immersion cleaner #699 (new), returned from customers in separate containers and remaining in the same container for shipment to the recycle facility, is considered a characteristic waste by TCLP (D004, D005, D006, D007, D008, D009, D010, D011, D018, D019, D021, D022, D023, D024, D025, D026, D027, D028, D029, D030, D032, D033, D034, D035, D036, D037, D038, D039, D040, D041, D042, and D043).

4. Mineral spirits dumpster mud and tank bottom sludge, which will accumulate in the solvent return receptacles (wet dumpsters) and in the sludge tank, are considered to be an Ignitable Waste (D001) and a characteristic waste by TCLP (D004, D005, D006, D007, D008, D009, D010, D011, D018, D019, D021, D022, D023, D024, D025, D026, D027, D028, D029, D030, D032, D033, D034, D035, D036, D037, D038, D039, D040, D041, D042, and D043).

5. Dry cleaning wastes will consist of spent filter cartridges, powder residue from diatomaceous or other powder filter systems and still bottoms. While approximately 80 percent of the dry cleaning solvent returned by Safety-Kleen customers will be perchloroethylene (F002) and a characteristic waste by TCLP (D004, D005, D006, D007, D008, D009, D010, D011, D018, D019, D021, D022, D023, D024, D025, D026, D027, D028, D029, D030, D032, D033, D034, D035, D036, D037, D038, D039, D040, D041, D042, and D043), approximately 17 percent is mineral spirits (D001), and a characteristic waste by TCLP ((D004, D005, D006, D007, D008, D009, D010, D011, D018, D019, D021, D022, D023, D024, D025, D026, D027, D028, D029, D030, D032, D033, D034, D035, D036, D037, D038, D039, D040, D041, D042, and D043), and the remaining 3 percent is trichloro-trifluoroethane (F002) and a characteristic waste by TCLP leaching procedure ((D004, D005, D006, D007, D008, D009, D010, D011, D018, D019, D021, D022, D023, D024, D025, D026, D027, D028, D029, D030, D032, D033, D034, D035, D036, D037, D038, D039, D040, D041, D042, and D043).

6. Antifreeze waste is approximately one-third water with the remaining third being antifreeze (ethylene glycol) and contaminants. As a protective measure, the storage tank area for spent antifreeze will be permitted to store wastes with the following TCLP waste codes: D004, D005, D006, D007, D008, D009, D010, D011, D018, D019, D021, D022, D023, D024, D025, D026, D027, D028, D029, D030, D032, D033, D034, D035, D036, D037, D038, D039, D040, D041, D042, and D043.

7. Paint wastes will consist of various lacquer thinners such as acetone, isopropyl alcohol, methyl ethyl ketone, methyl isobutyl ketone, toluene, xylenes, and acetate compounds (D001, F003, and F005) and is a characteristic waste by TCLP (D004, D005, D006, D007, D008, D009, D010, D011, D018, D019, D021, D022, D023, D024, D025, D026, D027, D028, D029, D030, D032, D033, D034, D035, D036, D037, D038, D039, D040, D041, D042, and D043). The waste will be collected in containers at the customer's place of business and the containers will then be palletized whenever possible and stored in the paint waste storage area of the accumulation center.

8. Due to the great variability in the composition of FRS wastes, their application or use, and the source industry, Safety-Kleen characterizes each stream from each generator separately. FRS wastes received at the facility are classified as characteristic wastes (D-waste codes), non-specific source wastes (F-waste codes), listed wastes from specific sources (K-wastes), commercial chemical products, manufacturing intermediates or off-specification chemical commercial products (U-waste codes). Most of the time, a waste stream will be some combination of specific components, and be categorized as a D- or F- waste. Table II.A.5-1 provides a list of the EPA waste codes managed at the facility under the FRS program. These wastes, except characteristic waste oil, are shipped in containers and are stored on pallets. The FRS wastes are handled as transfer wastes only.

A typical composition, and chemical physical analysis for each of the waste streams (except FRS) listed above are shown in the attached chemical analyses reports, based on existing data on these wastes generated from similar processes within Safety-Kleen's current and/or potential customers.

TABLE II.A.5-1

FLUID RECOVERY SERVICE WASTE TYPES

EPA Hazardous Waste No.	Description
D001	Solid waste that exhibits the characteristic of ignitability, but is not listed as a hazardous waste.
D002	Solid waste that exhibits the characteristic of corrosivity, but is not listed as a hazardous waste.
D004	Solid waste that exhibits the characteristic of toxicity for arsenic at 5.0 mg/L or more.
D005	Solid waste exhibiting the characteristic of toxicity for barium at 100 mg/L or more.
D006	Solid waste exhibiting the characteristic of toxicity for cadmium at 1.0 mg/L or more.
D007	Solid waste exhibiting the characteristic of toxicity for chromium at 5.0 mg/L or more.
D008	Solid waste exhibiting the characteristic of toxicity for lead at 5.0 mg/L or more.
D009	Solid waste exhibiting the characteristic of toxicity for mercury at 0.2 mg/L or more.
D010	Solid waste exhibiting the characteristic of toxicity for selenium at 1.0 mg/L or more.
D011	Solid waste exhibiting the characteristic of toxicity for silver at 5.0 mg/L or more.
D018	Solid waste exhibiting the characteristic of toxicity for benzene at 0.5 mg/L or more.
D019	Solid waste exhibiting the characteristic of toxicity for carbon tetrachloride at 0.5 mg/L or more.
D021	Solid waste exhibiting the characteristic of toxicity for chlorobenzene at 100.0 mg/L or more.
D022	Solid waste exhibiting the characteristic of toxicity for chloroform at 6.0 mg/L mg/L or more.

TABLE II.A.5-1 - Continued

FLUID RECOVERY SERVICE WASTE TYPES

EPA Hazardous Waste No.	Description
D023	Solid waste exhibiting the characteristic of toxicity for o-Cresol at 200.0 mg/L or more.
D024	Solid waste exhibiting the characteristic of toxicity for m-Cresol at 200.0 mg/L or more.
D025	Solid waste exhibiting the characteristic of toxicity for p-Cresol at 200.0 mg/L or more.
D026	Solid waste exhibiting the characteristic of toxicity for Cresol at 100.0 mg/L or more.
D027	Solid waste exhibiting the characteristic of toxicity for 1,4 Dichlorobenzene at 7.5 mg/L or more.
D028	Solid waste exhibiting the characteristic of toxicity for 1,2 Dichloroethane at 0.5 mg/L or more.
D029	Solid waste exhibiting the characteristic of toxicity for 1,1 Dichloroethylene at 0.7 mg/L or more.
D030	Solid waste exhibiting the characteristic of toxicity for 2,4 Dinitrotoluene at 0.13 mg/L or quantification limit.
D032	Solid waste exhibiting the characteristic of toxicity for Hexachlorobenzene at 0.13 mg/L or quantification limits.
D033	Solid waste exhibiting the characteristic of toxicity for Hexachlorobutadiene at 0.5 mg/L or more.
D034	Solid waste exhibiting the characteristic of toxicity for Hexachloroethane at above 3.0 mg/L or more.
D035	Solid waste exhibiting the characteristic of toxicity for Methyl Ethyl Ketone (MEK) at 200 mg/L or more.
D036	Solid waste exhibiting the characteristic of toxicity for Nitrobenzene at 2.0 mg/L or more.
D037	Solid waste exhibiting the characteristic of toxicity for Pentachlorophenol at 100.0 mg/L or more.

TABLE II.A.5-1 - Continued

FLUID RECOVERY SERVICE WASTE TYPES

EPA Hazardous Waste No.	Description
D038	Solid waste exhibiting the characteristic of toxicity for Pyridine at 5.0 mg/L or quantification limit.
D039	Solid waste exhibiting the characteristic of toxicity for Tetrachloroethylene at 0.7 mg/L or more.
D040	Solid waste exhibiting the characteristic of toxicity for Trichloroethylene at 0.5 mg/L or more.
D041	Solid waste exhibiting the characteristic of toxicity for 2,4,5-Trichlorophenol at 400.0 mg/L or more.
D042	Solid waste exhibiting the characteristic of toxicity for 2,4,6-Trichlorophenol at 2.0 mg/L or more.
D043	Solid waste exhibiting the characteristic of toxicity for Vinyl Chloride at 0.2 mg/L or more.
F001	The following spent halogenated solvents used in degreasing: tetrachloroethylene, trichloroethylene, methylene chloride, 1,1,1-trichloroethane, carbon tetrachloride, chlorinated fluorocarbons, spent solvent mixtures/blends used in degreasing, and still bottoms from the recovery of these spent solvents and spent solvent mixtures.
F002	The following spent halogenated solvents: tetrachloroethylene, methylene chloride, trichloroethylene, 1,1,1-trichloroethane, chlorobenzene, 1,1,2-trichloro-1,2,2-trifluoroethane, orthodichlorobenzene, trichlorofluoromethane, 1,1,2-trichloroethane, spent solvent mixtures and blends, and the still bottoms from the recovery of these spent solvents and spent solvent mixtures.
F003	The following spent non-halogenated solvents: xylene, acetone, ethyl acetate, ethyl benzene, ethyl ether, methyl isobutyl ketone, n-butyl alcohol, cyclohexanone, methanol, spent solvent mixtures and blends, and the still bottoms from the recovery of these spent solvents and spent solvent mixtures.
F004	The following spent non-halogenated solvents: cresols and cresylic acid, nitrobenzene, spent solvent mixtures and blends, and still bottoms from the recovery of these spent solvents and spent solvent mixtures.

TABLE II.A.5-1 - Continued

FLUID RECOVERY SERVICE WASTE TYPES

EPA Hazardous Waste No.	Description
F005	The following spent non-halogenated solvents: toluene, methyl ethyl ketone, carbon disulfide, isobutanol, pyridine, benzene, 2-ethoxyethanol, 2-nitropropane, spent solvent mixtures and blends, and the still bottoms from the recovery of these spent solvents and spent solvent mixtures.
F006	Wastewater treatment sludges from electroplating operations except from the following processes: 1) sulfuric acid anodizing of aluminum; 2) tin plating on carbon steel; 3) zinc plating (segregated basis) on carbon steel; 4) aluminum or zinc-aluminum plating on carbon steel; 5) cleaning/stripping associated with tin, zinc and aluminum plating on carbon steel; and 6) chemical etching and milling of aluminum.
F019	Wastewater treatment sludges from the chemical conversion coating of aluminum.
F024	Wastes, including but not limited to, distillation residues, heavy ends, tars, and reactor clean-out wastes from the production of chlorinated aliphatic hydrocarbons, having carbon content from one to five, utilizing free radical catalyzed processes. (This listing does not include light ends, spent filters and filter aids, spent dessicants, wastewater, wastewater treatment sludges, spent catalysts and wastes listed in 261.32).
F039	Multisource leachate for wastes other than F020 - F023, F026, F027, and F028.
K006	Wastewater treatment sludge from the production of chrome oxide green pigments (anhydrous and hydrated).
K016	Heavy ends of distillation residues from the production of carbon tetrachloride.
K019	Heavy ends from the distillation of ethylene dichloride in ethylene dichloride production.
K022	Distillation bottom tars from the production of phenol/acetone from cumene.
K029	Waste from the product steam stripper in the production of 1,1,1-trichloroethane.
K030	Column bottoms or heavy ends from the combined production of trichloroethylene and perchloroethylene.

TABLE II.A.5-1 - Continued

FLUID RECOVERY SERVICE WASTE TYPES

EPA Hazardous Waste No.	Description
K031	By-product salts generated in the production of MSMA and cacodylic acid.
K048	Dissolved air flotation float from the petroleum refining industry.
K049	Slop oil emulsion solids from the petroleum refining industry.
K050	Heat exchanger bundle cleaning sludge from the petroleum refining industry.
K051	API separator sludge from the petroleum refining industry.
K052	Tank bottoms (leaded) from the petroleum refining industry.
K085	Distillation or fractionation column bottoms from the production of chlorobenzene.
K086	Solvent washes and sludges, caustic washes and sludges or water washes and sludges from cleaning tubs and equipment used in the formulation of ink from pigments, driers, soaps and stabilizers containing chromium and lead.
K095	Distillation bottoms from the production of 1,1,1-trichloroethane.
K096	Heavy ends from the heavy ends column from the production of 1,1,1-trichloroethane.
K009	Distillation bottoms from production of acetaldehyde from ethylene.
K010	Distillation side cuts from the production of acetaldehyde from ethylene.
K011	Bottom stream from the wastewater stripper in the production of acrylonitrile.
K013	Bottom stream from the acetonitrile column in the production of acrylonitrile.
K014	Bottoms from the acetonitrile purification column in the production of acrylonitrile.
K015	Still bottoms from the distillation of benzyl chloride.
K002	Wastewater treatment sludge from the production of chrome yellow and orange pigments.
K003	Wastewater treatment sludge from the production of molybdate orange pigments.
K004	Wastewater treatment sludge from the production of zinc yellow pigments.

TABLE II.A.5-1 - Continued

FLUID RECOVERY SERVICE WASTE TYPES

EPA Hazardous Waste No.	Description
K005	Wastewater treatment sludge from the production of chrome green pigments.
U001	Acetaldehyde
U002	Acetone
U003	Acetonitrile
U009	Acrylonitrile
U019	Benzene
U031	n-Butyl Alcohol
U037	Chlorobenzene
U043	Ethane, chloro-
U044	Chloroform
U051	Creosote
U052	Cresol (Cresylic Acid)
U055	Cumene
U056	Benzene, Hexahydro-
U057	Cyclohexanone
U068	Methylene bromide
U069	1,2 Benzenedicarboxylic Acid, dibutyl ester
U070	Benzene, 1,2 - dichloro-
U071	Benzene, 1,3 - dichloro-
U072	Benzene, 1,4 - dichloro-
U075	Methane Dichlorodifluoro-
U077	Ethane, 1,2, - dichloro-
U078	Ethene, 1,2 - dichloro-

TABLE II.A.5-1 - Continued

FLUID RECOVERY SERVICE WASTE TYPES

EPA Hazardous Waste No.	Description
U079	Ethene, 1,2 - dichloro-
U080	Methylene Chloride
U083	Propane, 1,2 - dichloro-
U084	1 - Propane, 1,3 - dichloro
U107	1,2 - Benzenedicarboxylic acid
U108	1,4-Diethyleneoxide
U110	Dipropylamine
U112	Ethyl acetate
U113	Ethyl acrylate
U117	Ethyl ether
U118	Ethyl methacrylate
U121	Trichloromonofluoromethane
U125	Furfural
U140	Isobutyl alcohol
U154	Methanol (Methyl Alcohol)
U159	Methyl ethyl ketone
U161	Methyl isobutyl ketone
U162	Methyl methacrylate
U165	Naphthalene
U169	Nitrobenzene
U171	2-Nitropropane
U188	Phenol
U191	2-Picoline

TABLE II.A.5-1 - Continued

FLUID RECOVERY SERVICE WASTE TYPES

EPA Hazardous Waste No.	Description
U196	Pyridine
U210	Tetrachloroethylene
U211	Methane, tetrachloro
U213	Tetrahydrofuran
U220	Toluene
U226	1,1,1 Trichloroethane
U227	1,1,2 Trichloroethane
U228	Trichloroethylene
U239	Xylene
U359	2-Ethoxyethanol

USED MINERAL SPIRITS

The clean mineral spirits solvent is labeled under the trade name of "Safety-Kleen 105 Solvent", so-named because of the flash point of the solvent being 105°F (minimum). Chemically, the solvent primarily consists of petroleum hydrocarbon fractions (the mineral spirits) with a boiling point image between 310°F and 400°F. Impurities, such as light aromatic hydrocarbons (LAHC) and chlorinated hydrocarbons, usually constitute less than one percent of the total volume. The mineral spirits typically constituted over 99.5 percent of the total volume of the solvent.

The used mineral spirits solvent consists primarily of mineral spirits solvent plus water, insoluble solids, oil, and grease picked up in the various degreasing operations that Safety-Kleen's customers use. In most instances, no water is associated with the used solvent; however, at times, the water content may range from one percent to as much as 50 percent. The bottoms may range from 2 percent to 10 percent, by volume, in the used solvent.

Chemically, the composition of the solvent fraction in the used mineral spirits solvent is essentially the same as the clean solvent, as shown in analyses.

USED IMMERSION CLEANER

The clean chlorinated solvent is labeled under the trade name of "Immersion Cleaner and Carburetor and Cold Parts Cleaner #609." It is a two-phase system consisting of an upper aqueous (water) layer and lower non-aqueous (solvent) layer. The water phase consists of water and Dresinate TX (a sodium soap of tall oil). The solvent phase is composed of methylene chloride, orthodichlorobenzene, cresylic acid, and an amines additive.

A new "Immersion Cleaner and Carburetor and Cold Parts Cleaner #699" is also being leased and will eventually replace the #609 immersion cleaner. It is a heavy aromatic

naphtha, N-methyl-2-pyrolidon dipropylene glycol methyl ether, monoethanolamine and oleic acid, and contains a maximum of 1 percent total chlorinated solvents.

Both the new and old used immersion cleaner is basically unchanged from its clean state, except oils, greases, and insoluble solids may be picked up during the various degreasing operations used by Safety-Kleen's customers. The spent solvent is non-flammable. It is regarded as toxic because it contains various toxic chemicals (see MSDSs in Attachment II.A.4(b)).

It is anticipated that approximately 9,600 gallons of used immersion cleaner #609 and #699 will be returned to the service center from the customers, and will be subsequently shipped to the recycle center for reclamation.

USED MINERAL SPIRITS BOTTOM SLUDGE

This is material settled from used mineral spirits in the aboveground tanks. It contains insoluble solids, oils and greases, and some water picked up in the degreasing operations, together with a small amount of mineral spirits. Analyses have shown that the sludge is an ignitable waste and some TCLP analyses have shown it to be toxic using TCLP standards while others have not.

The sludge is removed from the aboveground tank periodically and shipped to Safety-Kleen's facility for reclamation. The estimated annual quantity is included in the estimate of used mineral spirits.

USED MINERAL SPIRITS DUMPSTER MUD

This waste material is accumulated in the wet dumpsters when emptying the used mineral spirits from the containers into the aboveground storage tanks. The nature of this waste is similar to the used mineral spirits bottom sludge, except with some small metal parts

and less mineral spirits. It is regarded as an ignitable waste and often is also considered a characteristic waste using TCLP standards.

The sludge in the dumpsters is cleaned out frequently. The waste is containerized and shipped to Safety-Kleen's facility for recycling. Approximately 150 drums (1,500 gallons) of dumpster mud is anticipated to be removed from this service center each year.

DRY CLEANING WASTES

Solvent used in dry cleaning of clothing is commonly tetrachloroethylene (or perchloroethylene). Hence, waste generated from dry cleaning operations contains various concentrations of the solvent. Basically, wastes generated by dry cleaning facilities are in the following forms.

1. Cartridge Filter: In addition to the construction materials consisting of steel, paper, clay, and carbon, the used cartridge retains solvent, oil and grease, and undissolved elements such as lint and soil. Solvent retained in the filter cartridge generally amounts to less than 50 percent of the total cartridge weight.

2. Muck: At some dry cleaning facilities, a mixture of powdered materials is used as the filter medium for the dry cleaning solvent, in lieu of the cartridge filter. This filter medium normally consists of diatomaceous earth and carbon. In addition to lint, soil, oil, and grease retained by this medium, between 40 and 50 percent by weight of the "muck" is solvent.

3. Still Residue: After filtration, the dry cleaning solvent is distilled by the dry cleaning machine to remove the dissolved materials from the used solvent. The dissolved materials (still residues) are in liquid form and consist of primarily detergent, oil and grease, vinyl acetate (a sizing compound), and 20 to 30 percent of solvent.

ANTIFREEZE COLLECTION SERVICE

The spent antifreeze (ethylene glycol) is collected from automobile service stations. These wastes are deposited into a carboy or containers by the customer, on the customer's premises, and the carboy is pumped into a tanker truck or containers by the sales representative. At the service center, it is then pumped into a 20,000-gallon storage tank (if handled in bulk) or placed in the container warehouse (if handled in containers) and held for shipment to a Safety-Kleen Recycle Center.

PAINT WASTES

Paint wastes consist of various lacquer thinners and paints. The waste is collected in containers at the customer's place of business and the containers are then palletized and stored in the container storage area of the warehouse.

FLUID RECOVERY SERVICE WASTES

Fluid Recovery Services (FRS) is a program managed by the Safety-Kleen Service Centers. Under this program, waste types similar to the FRS wastes provided by Safety-Kleen are collected by the service center and processed by the recycle centers. These wastes may or may not have been originally obtained from Safety-Kleen by the industrial customer. These wastes are handled as transfer wastes at the service center. Examples of the types of wastes that may be received from FRS customers include:

1. Spent hydrocarbon distillates, such as waste fuel, oil, petroleum, and naphtha, etc.

2. Lubricating, hydraulic oils, and machine oils.

3. Industrial halogenated solvents such as 1,1,1-trichloroethane, tetrachloroethylene, freon, and trichloroethane.

4. Paint and lacquer thinners and paint wastes.

5. Other hazardous and non-hazardous halogenated and non-halogenated solvents.

FRS wastes received at the facility are classified as characteristic wastes (D-waste codes, non-specific source wastes (F-waste codes), listed wastes from specific sources (K-wastes, commercial chemical products, manufacturing intermediates or off-specification chemical commercial products (U-waste codes). Most of the time, a waste stream will be some combination of specific components, and be categorized as a D- or F- waste. Table II.A.5-1 provides a list of the EPA waste codes managed at the facility under the FRS program.

Certain other wastes that result from the use of organic solvents are also managed through the service centers. These include the solids and sludges that settle out of the used solvent during handling and processing. Lint, paper, oils, greases, carbons, and metals are examples of materials which may settle or separate out of used solvent. In addition to the listed waste codes, these wastes may also exhibit a characteristic under the toxicity characteristic leaching procedure.

Certain solvents are not economically recoverable in their prime form. These are typically solvents of low intrinsic value (e.g., methanol), those where the user's specifications are unattainable or where the mixture cannot be efficiently separated because of the formation of azeotropes, overlapping or close boiling ranges. However, when properly blended and processed, these solvents can be a beneficial source of energy. The Safety-Kleen recycle centers are equipped to process non-recoverable solvent mixtures with still bottoms from recovery of their solvent to produce valuable solvent based fuels.

In each of these end use applications at facilities classified as Industrial Furnaces, the combustion conditions are orders of magnitude more destructive than those specified for incinerators. For each industrial furnace emission controls are in place and covered by existing regulations. Specifications are restrictive for PCBs, herbicides, pesticides, etc., and for other wastes that might adversely affect the operation of the unit or the properties of the finished product.

Exhibit I.D.2-9

safety-kleen

The attached data package covers TCLP analyses of materials obtained from Safety-Kleen Recycle Centers during July of 1990. Each Recycle Center prepared samples for each waste stream received and/or generated. Each sample represents a composite of individual samples received for testing over a fixed period of time. For example, the Parts Washer Solvent sample at each Recycle Center was generated by keeping in a refrigerator a small retain from each tanker received from individual SK Branches over a two week period. At the end of the two weeks, all the retains were combined into one jar.

All composited materials were shipped in coolers immediately upon generation with formal chain-of-custody forms to GT Environmental Laboratories certified for the states involved with each individual recycle center. These laboratories performed the analyses, making sure all holding time restrictions were met.

The resulting data is presented in several different formats. The first page of each set includes a summary of physical and chemical properties their mean and range. It is important to note that all samples, including liquids, were extracted for the TCLP organic phase of the work.

The next set shows volatiles data for whole samples. These samples had to be diluted considerably to bring everything on scale. Thus, the detection limits are relatively high. These data can be used where the sample would normally just be filtered and analyzed for TCLP organic constituent content.

The third set of data is a comparison of the TCLP extracted and non-extracted components. This is useful where one is close to the regulatory limits.

The final page of each set is the detailed, site-by-site data from which the initial summary page was generated. Again, the organic data is for a TCLP extract of the whole sample.

The data summaries have been provided to the Recycle Centers, who in turn have sent the data to the individual SK Branches whose waste streams were included in the composites.

SAMPLE IDENTIFICATION CODES

PWS - Spent Parts Washer Solvent

IC - Spent Immersion Cleaner

PGC - Spent Paint Gun Cleaner

DCS - Spent Dry Cleaning Solvent

DM - PWS Dumpster Mud

PWSD - Parts Washer Solvent Distillation Bottoms

MDB - Miscellaneous Distillation Bottoms

CLW - Chlorinated Waste Water

NCLW - Nonchlorinated Waste Water

PWCS - Parts Washer Cooker Solids

DCCS - Dry Cleaner Cooker Solids

FUEL - Blended Outbound Fuel for Kiln

Abbreviation Key

acenaphthene	Acenaphthene
acenaphthy	Acenaphthylene
acetone	Acetone
Ag	Silver
anthracene	Anthracene
As	Arsenic
b2ethhexph	bis(2-Ethylhexyl)phthalate
Ba	Barium
benz acid	Benzoic Acid
benzene	Benzene
benzyl 'ol	Benzyl Alcohol
ben(a)anthr	Benzo(a)anthracene
ben(a)pyren	Benzo(a)pyrene
ben(b)fluor	Benzo(b)fluoranthene
ben(ghi)per	Benzo(g,h,i)perylene
ben(k)fluor	Benzo(k)fluoranthene
butbenzph	Butylbenzylphthalate
b-2Clethox	bis(2-Chloroethoxy)methane
b-2Cl-ethr	bis(2-Chloroethyl) Ether
b-2Cl-iPE	bis(2-Chloroisopropyl) Ether
4Brphenph	4-Bromophenyl phenyl Ether
C2Cl6	Hexachloroethane
C2H3Cl	Vinyl Chloride
C2H5Cl	Chloroethane
CCl4	Carbon Tetrachloride
Cd	Cadmium
CH2Cl2	Methylene Chloride
CH3Br	Bromomethane
CH3Cl	Chloromethane
CHBr2Cl	Dibromochloromethane
CHBr3	Bromoform
CHBrCl2	Bromodichloromethane
CHCl3	Chloroform
chrysene	Chrysene
4-Cianiline	4-Chloroaniline
Clbenz	Chlorobenzene
Cl-benz	Chlorobenzene
Cl6-benz	Hexachlorobenzene
Cl6benzene	Hexachlorobenzene
Cl6butadien	Hexachlorobutadiene
Cl6-13-but	Hexachlorobutadiene
Cl6cycpent	Hexachlorocyclopentadiene
3,3'Cl2benz	3,3'-Dichlorobenzidine
Cl6-eth	Hexachloroethane
4Cl3Mephnl	4-Chloro-3-methylphenol
2-Clnaph	2-Chloronaphthalene
Cl5phenol	Pentachlorophenol
Cl5-phenol	Pentachlorophenol
2Cl-phenol	2-Chlorophenol
4Clphenph	4-Chlorophenyl phenyl Ether
2-CVE	2-Chloroethyl Vinyl Ether
Cr	Chromium
cresol	Methylphenols (total)
CS2	Carbon Disulfide
c-1,3-DCP	cis-1,3-Dichloropropene
dben(a,h)an	Dibenzo(a,h)anthracene
1,1-DCA	1,1-Dichloroethane
1,2-DCA	1,2-Dichloroethane
1,1-DCE	1,1-Dichloroethene
1,2-DCE	1,2-Dichloroethene (total)
1,2-DCB	1,2-Dichlorobenzene
1,3-DCB	1,3-Dichlorobenzene
1,4-DCB	1,4-Dichlorobenzene
2,4-dClph	2,4-Dichlorophenol
dethphthal	Diethylphthalate
dibenfuran	Dibenzofuran
d-n-butph	Di-n-butylphthalate
d-n-octph	Di-n-octylphthalate
2,4dnitrophe	2,4-Dinitrophenol
2,4-DNT	2,4-Dinitrotoluene
4,6dn2Mep	4,6-Dinitro-2-methylphenol
1,2-DCPA	1,2-Dichloropropane
2,6-DNT	2,6-Dinitrotoluene
eth-benz	Ethylbenzene
fluoranthen	Fluoranthene
fluorene	Fluorene
FP	flashpoint
2-hex'one	2-Hexanone
Hg	Mercury
ind(123-cd)	Indeno(1,2,3-c,d)pyrene
isophorone	Isophorone
MEK	2-Butanone (methyl ethyl ketone)
2-Mnaph	2-Methylnaphthalene
4-Me-2-pe	4-Methyl-2-pentanone
2Me-phenol	2-Methylphenol
4Me-phenol	4-Methylphenol
2,4Meph'ol	2,4-Dimethylphenol
Me2phthal	Dimethylphthalate
Naph'ene	Naphthalene
2-nitroanil	2-Nitroaniline
3-nitroanil	3-Nitroaniline
4-nitroanil	4-Nitroaniline
nitrobenz	Nitrobenzene
N-nitrosd	N-Nitrosodiphenylamine
N-nitrosd	N-Nitroso-di-n-propylamine
4nitrophenol	4-Nitrophenol
2nitroph'ol	2-Nitrophenol
Pb	Lead
1,1,2,2PCA	1,1,2,2-Tetrachloroethane
PCE	Tetrachloroethene
pH	pH
phenanthre	Phenanthrene
phenol	Phenol
pyrene	Pyrene
pyridine	Pyridine
Se	Selenium
SG	specific gravity
styrene	Styrene
1,1,1-TCA	1,1,1-Trichloroethane
1,1,2-TCA	1,1,2-Trichloroethane
TCE	Trichloroethene
t-1,3-DCPE	trans-1,3-Dichloropropene
1,2,4-TCB	1,2,4-Trichlorobenzene
2,4,5tClph	2,4,5-Trichlorophenol
2,4,5-TCP	2,4,5-Trichlorophenol
2,4,6tClph	2,4,6-Trichlorophenol
2,4,6-TCP	2,4,6-Trichlorophenol
toluene	Toluene
VChloride	Vinyl Chloride
V-acetate	Vinyl Acetate
xylenes	Xylenes (total)

na	not applicable
matrix	matrix effect - no analysis
coc	coc error no analysis

Parts Washer Solvent Wastes

Physical Properties and TCLP Analysis, ppm

Parameter	Reg. Limit	# Samp	Avg	Min	Max
pH	<2 or >10	7	5.5	5.5	8.0
SG	na	7	0.79	0.78	0.80
FP	< 100	7	112	78	151
As	5	7	0.00	0.00	0.00
Ba	100	7	0.47	0.00	1.20
Cd	1	7	0.05	0.00	0.07
Cr	5	7	0.00	0.00	0.02
Pb	5	7	0.90	0.47	1.60
Hg	0.2	7	0.00	0.00	0.00
Se	1	7	0.00	0.00	0.00
Ag	5	7	0.00	0.00	0.00
cresol	200	7	2.70	0.00	9.00
2.4-DNT	0.13	7	0.63	0.00	4.40
Cl6-benz	0.13	7	0.00	0.00	0.00
Cl6-13-but	0.5	7	0.00	0.00	0.00
Cl6-eth	3	7	0.00	0.00	0.00
nitrobenz	2	7	0.00	0.00	0.00
Cl5-phenol	100	7	0.00	0.00	0.00
pyridine	5	7	0.00	0.00	0.00
2.4.5-TCP	400	7	0.00	0.00	0.00
2.4.6-TCP	2	7	0.00	0.00	0.00
benzene	0.5	7	0.04	0.00	0.15
CCl4	0.5	7	0.00	0.00	0.00
Clbenz	100	7	0.00	0.00	0.00
CHCl3	6	7	0.06	0.00	0.41
1.4-DClB	7.5	7	0.05	0.00	0.38
1.2-DCA	0.5	7	0.00	0.00	0.00
1.1-DCE	0.7	7	0.00	0.00	0.00
MEK	200	7	0.74	0.00	3.90
PCE	0.7	7	0.55	0.00	2.30
TCE	0.5	7	0.07	0.00	0.49
VChloride	0.2	7	0.00	0.00	0.00

Less than values are treated as zeros in the statistical analysis
Greater than values are treated as the value in the statistical analysis

Parts Washer Solvent Wastes

Volatile Organics (EPA 8240) Analysis, ppm

Parameter		CH3Cl	CH3Br	C2H3Cl	C2H5Cl	CH2Cl2	acetone	CS2	1,1-DCE	1,1-DCA	1,2-DCE	CHCl3
LAB	SITE											
M	CL	< 100	< 100	< 100	< 100	< 50	< 1000	< 50	< 50	< 50	< 50	< 50
W	DE	< 120	< 120	< 120	< 120	< 60	< 1200	< 60	< 60	< 60	< 60	< 60
W	EL	< 120	< 120	< 120	< 120	< 62	< 1200	< 62	< 62	< 62	< 62	< 62
W	HE	< 120	< 120	< 120	< 120	69	< 1200	< 62	< 62	< 62	< 62	< 62
M	LE	< 100	< 100	< 100	< 100	< 50	< 1000	< 50	< 50	< 50	< 50	< 50
M	MA	< 250	< 250	< 250	< 250	120	< 2500	< 120	< 120	< 120	< 120	< 120
C	HE	< 600	< 600	< 600	< 600	< 300	< 6000	< 300	< 300	< 300	< 300	< 300

Parameter		1,2-DCA	MEK	1,1,1-TCA	CCl4	v-acetate	CHBrCl2	1,2-DCPA	1,3-DCPE	TCE	CHBr2Cl	1,1,2-TCA
LAB	SITE											
M	CL	< 50	< 1000	< 50	< 50	< 500	< 50	< 50	< 50	410	< 50	< 50
W	DE	< 60	< 1200	380	< 60	< 600	< 60	< 60	< 60	< 60	< 60	< 60
W	EL	< 62	< 1200	750	< 62	< 620	< 62	< 62	< 62	< 62	< 62	< 62
W	HE	< 62	< 1200	400	< 62	< 620	< 62	< 62	< 62	< 62	< 62	< 62
M	LE	< 50	< 1000	300	< 50	< 500	< 50	< 50	< 50	61	< 50	< 50
M	MA	< 120	< 2500	< 120	< 120	< 1200	< 120	< 120	< 120	< 120	< 120	< 120
C	HE	< 300	< 6000	2300	< 300	< 3000	< 300	< 300	< 300	< 300	< 300	< 300

Parameter		benzene	2-CVE	1,3-DCPE	CHBr3	Me-2-pen	2-hex'one	PCE	1,1,2,2PCA	toluene	Cl-benz	eth-benz
LAB	SITE											
M	CL	< 50	< 100	< 50	< 50	< 500	< 500	96	< 50	180	< 50	67
W	DE	< 60	< 120	< 60	< 60	< 600	< 600	720	< 60	480	< 60	320
W	EL	< 62	< 120	< 62	< 62	< 620	< 620	930	< 62	540	< 62	310
W	HE	< 62	< 120	< 62	< 62	< 620	< 620	1900	< 62	340	< 62	390
M	LE	< 50	< 100	< 50	< 50	< 500	< 500	140	< 50	290	< 50	150
M	MA	< 120	< 250	< 120	< 120	< 1200	< 1200	< 120	< 120	420	< 120	140
C	HE	< 300	< 600	< 300	< 300	< 3000	< 3000	1500	< 300	1500	< 300	500

Parts Washer Solvent Wastes

Volatile Organics (EPA 8240) Analysis, ppm

Parameter		styrene	xylenes	1,2-DCB	1,3-DCB	1,4-DCB
LAB	*SITE*					
M	*CL*	< 50	660	< 100	< 100	< 100
W	*DE*	< 60	4100	790	290	< 60
W	*FL*	< 62	2500	< 62	< 62	< 62
W	*HE*	90	3400	340	< 62	90
M	*LE*	< 50	1300	140	< 100	< 100
M	*MA*	< 120	920	< 250	< 250	< 250
C	*HE*	17000	3900	1900	380	1500

Parts Washer Solvent Wastes
TCLP Organics And EPA 8240/8270 Analyses, ppm

		Parameter	cresol	2,4-DNT	Cl6-benz	Cl6-13-but	Cl6-eth	nitrobenz	Cl5-phenol	pyridine	2,4,5-TCP	2,4,6-TCP
		Reg Limit	200	0.13	0.13	0.5	3	2	100	5	400	2
LAB	SITE	ANALYSIS								na		
M	CL	TCLP	0	< 0.033	< 0.033	< 0.033	< 0.033	< 0.033	< 0.17	< 0.17	< 0.033	< 0.033
M	CL	8240/8270	< 1	< 1	< 1	< 1	< 1	< 1	< 5	na	< 1	< 1
W	DE	TCLP	3	< 0.033	< 0.033	< 0.033	< 0.033	< 0.033	< 0.17	< 0.17	< 0.033	< 0.033
W	DE	8240/8270	200	< 100	< 100	< 100	< 100	< 100	< 500	na	< 100	< 100
W	EL	TCLP	6.7	< 1.0	< 1.0	< 1.0	< 1.0	< 1.0	< 5.0	< 5.0	< 1.0	< 1.0
W	EL	8240/8270	< 1200	< 1200	< 1200	< 1200	< 1200	< 1200	< 6200	na	< 1200	< 1200
W	HE	TCLP	< 0.33	< 0.33	< 0.33	< 0.33	< 0.33	< 0.33	< 1.6	< 1.6	< 0.33	< 0.33
W	HE	8240/8270	< 1200	< 1200	< 1200	< 1200	< 1200	< 1200	< 6200	na	< 1200	< 1200
M	LE	TCLP	< 0.033	< 0.033	< 0.033	< 0.033	< 0.033	< 0.033	< 0.17	< 0.17	< 0.033	< 0.033
M	LE	8240/8270	< 50	< 50	< 50	< 50	< 50	< 50	< 250	na	< 50	< 50
M	MA	TCLP	< 0.67	4.4	< 0.67	< 0.67	< 0.67	< 0.67	< 3.3	< 3.3	< 0.67	< 0.67
M	MA	8240/8270	< 100	< 100	< 100	< 100	< 100	< 100	< 500	na	< 100	< 100
C	HE	TCLP	0.21	< 0.033	< 0.033	< 0.033	< 0.033	< 0.033	< 0.17	< 0.17	< 0.033	< 0.033
C	HE	8240/8270	< 100	< 100	< 100	< 100	< 100	< 100	< 500	na	< 100	< 100

		Parameter	benzene	CCl4	Clbenz	CHCl3	1,4-DCB	1,2-DCA	1,1-DCE	MEK	PCE	TCE	VChloride
		Reg Limit	0.5	0.5	100	6	7.5	0.5	0.7	200	0.7	0.5	0.2
LAB	SITE	ANALYSIS											
M	CL	TCLP	< 0.10	< 0.10	< 0.10	< 0.10	< 0.20	< 0.10	< 0.10	< 2.0	0.61	< 0.10	< 0.20
M	CL	8240/8270	< 50	< 50	< 50	< 50	< 100	< 50	< 50	< 1000	96	410	< 100
W	DE	TCLP	< 0.10	< 0.10	< 0.10	< 0.10	< 0.10	< 0.10	< 0.10	< 2.0	0.16	< 0.10	< 0.20
W	DE	8240/8270	< 60	< 60	< 60	< 60	< 60	< 60	< 60	< 1200	720	< 60	< 120
W	EL	TCLP	< 0.10	< 0.10	< 0.10	< 0.10	< 0.10	< 0.10	< 0.10	3.9	2.8	< 0.10	< 0.20
W	EL	8240/8270	< 62	< 62	< 62	< 62	< 62	< 62	< 62	< 1200	930	< 62	< 120
W	HE	TCLP	< 0.10	< 0.10	< 0.10	< 0.10	< 0.10	< 0.10	< 0.10	< 2.0	< 0.10	0.49	< 0.20
W	HE	8240/8270	< 62	< 62	< 62	< 62	90	< 62	< 62	< 1200	1900	< 62	< 120
M	LE	TCLP	< 0.10	< 0.10	< 0.10	< 0.10	< 0.20	< 0.10	< 0.10	< 2.0	0.56	< 0.10	< 0.20
M	LE	8240/8270	< 50	< 50	< 50	< 50	< 100	< 50	< 50	< 1000	140	61	< 100
M	MA	TCLP	0.15	< 0.10	< 0.10	0.41	< 0.20	< 0.10	< 0.10	< 2.0	0.15	< 0.10	< 0.20
M	MA	8240/8270	< 120	< 120	< 120	< 120	< 250	< 120	< 120	< 2500	< 120	< 120	< 250
C	HE	TCLP	0.12	< 0.05	< 0.05	< 0.05	0.38	< 0.05	< 0.05	1.3	0.27	< 0.05	< 0.1
C	HE	8240/8270	< 300	< 300	< 300	< 300	1500	< 300	< 300	< 6000	1500	< 300	< 600

Parts Washer Solvent Wastes

Physical Properties and TCLP Metals Analysis, ppm

LAB	SITE	pH	SG	FP	As	Ba	Cd	Cr	Pb	Hg	Se	Ag
	Reg Limit	<2 or >10	na	< 100	5	100	1	5	5	0.2	1	5
M	CL	5.5	0.79	125	< 0.5	0.51	0.041	< 0.01	0.47	< 0.001	< 0.2	< 0.01
W	DE	6.5	0.799	110	< 0.05	0.6	< 0.05	< 0.05	1.3	< 0.01	< 0.05	< 0.05
W	EL	7	0.777	151	< 0.05	0.6	0.06	< 0.05	0.5	< 0.01	< 0.05	< 0.05
W	HE	6.5	0.775	95	< 0.05	1.2	0.07	< 0.05	1.2	< 0.01	< 0.05	< 0.05
M	LE	6	0.78	115	< 0.5	0.27	0.055	< 0.01	0.74	0.002	< 0.2	< 0.01
M	MA	6.5	0.8	110	< 0.5	< 1.0	0.059	0.017	1.6	0.0018	< 0.2	< 0.01
C	HE	8	0.79	78	< 1	0.09	0.05	< 0.02	0.5	< 0.002	< 1	< 0.05

TCLP Semi Volatiles Analysis, ppm

LAB	SITE	cresol	2,4-DNT	Cl6-benz	Cl6-13-but	Cl6-eth	nitrobenz	Cl5-phenol	pyridine	2,4,5-TCP	2,4,6-TCP
	Reg Limit	200	0.13	0.13	0.5	3	2	100	5	400	2
M	CL	9	< 0.033	< 0.033	< 0.033	< 0.033	< 0.033	< 0.17	< 0.17	< 0.033	< 0.033
W	DE	3	< 0.033	< 0.033	< 0.033	< 0.033	< 0.033	< 0.17	< 0.17	< 0.033	< 0.033
W	EL	6.7	< 1.0	< 1.0	< 1.0	< 1.0	< 1.0	< 5.0	< 5.0	< 1.0	< 1.0
W	HE	< 0.33	< 0.33	< 0.33	< 0.33	< 0.33	< 0.33	< 1.6	< 1.6	< 0.33	< 0.33
M	LE	< 0.033	< 0.033	< 0.033	< 0.033	< 0.033	< 0.033	< 0.17	< 0.17	< 0.033	< 0.033
M	MA	< 0.67	4.4	< 0.67	< 0.67	< 0.67	< 0.67	< 3.3	< 3.3	< 0.67	< 0.67
C	HE	0.21	< 0.033	< 0.033	< 0.033	< 0.033	< 0.033	< 0.17	< 0.17	< 0.033	< 0.033

TCLP Volatiles Analysis, ppm

LAB	SITE	benzene	CCl4	Clbenz	CHCl3	1,4-DClB	1,2-DCA	1,1-DCE	MEK	PCE	TCE	VChloride
	Reg Limit	0.5	0.5	100	6	7.5	0.5	0.7	200	0.7	0.5	0.2
M	CL	< 0.10	< 0.10	< 0.10	< 0.10	< 0.20	< 0.10	< 0.10	< 2.0	0.61	< 0.10	< 0.20
W	DE	< 0.10	< 0.10	< 0.10	< 0.10	< 0.10	< 0.10	< 0.10	< 2.0	0.16	< 0.10	< 0.20
W	EL	< 0.10	< 0.10	< 0.10	< 0.10	< 0.10	< 0.10	< 0.10	3.9	2.8	< 0.10	< 0.20
W	HE	< 0.10	< 0.10	< 0.10	< 0.10	< 0.10	< 0.10	< 0.10	< 2.0	< 0.10	0.49	< 0.20
M	LE	< 0.10	< 0.10	< 0.10	< 0.10	< 0.20	< 0.10	< 0.10	< 2.0	0.58	< 0.10	< 0.20
M	MA	0.15	< 0.10	< 0.10	0.41	< 0.20	< 0.10	< 0.10	< 2.0	0.15	< 0.10	< 0.20
C	HE	0.12	< 0.05	< 0.05	< 0.05	0.38	< 0.05	< 0.05	1.3	0.27	< 0.05	< 0.1

Dumpster Mud Wastes

Physical Properties and TCLP Analysis. pcm

Parameter	Reg. Limit	# Samp	Avg	Min	Max
pH	<2 or >10	6	7.8	6.5	10.0
SG	na	1	1.2	1.2	1.2
FP	< 100	6	107	80	150
As	5	6	0	0	0
Ba	100	6	0.65	0.28	1.00
Cd	1	6	1.46	0.50	2.50
Cr	5	6	0.04	0.00	0.15
Pb	5	6	98.03	1.30	570.00
Hg	0.2	6	0.00	0.00	0.00
Se	1	6	0.00	0.00	0.00
Ag	5	6	0.00	0.00	0.00
cresol	200	6	22.31	0.00	96.00
2.4-DNT	0.13	6	0.00	0.00	0.00
Cl6-benz	0.13	6	0.00	0.00	0.00
Cl6-13-but	0.5	6	0.00	0.00	0.00
Cl6-eth	3	6	0.00	0.00	0.00
nitrobenz	2	6	0.00	0.00	0.00
Cl5-phenol	100	6	0.00	0.00	0.00
pyridine	5	6	0.00	0.00	0.00
2.4.5-TCP	400	6	0.00	0.00	0.00
2.4.6-TCP	2	6	0.00	0.00	0.00
benzene	0.5	6	0.12	0.00	0.52
CCl4	0.5	6	0.03	0.00	0.17
Clbenz	100	6	0.72	0.00	4.30
CHCl3	6	6	0.00	0.00	0.00
1.4-DClB	7.5	6	0.82	0.00	4.40
1.2-DCA	0.5	6	0.00	0.00	0.00
1.1-DCE	0.7	6	0.00	0.00	0.00
MEK	200	6	2.50	0.00	15.00
PCE	0.7	6	0.92	0.00	3.60
TCE	0.5	6	0.10	0.00	0.45
VChloride	0.2	6	0.00	0.00	0.00

Less than values are treated as zeros in the statistical analysis
Greater than values are treated as the value in the statistical analysis

Dumpster Mud Wastes

Volatile Organics (EPA 8240) Analysis, ppm

ɔotor	CH3Cl	CH3Br	C2H3Cl	C2H5Cl	CH2Cl2	acetone	CS2	1,1-DCE	1,1-DCA	1,2-DCE	CHCl3
SITE											
CL	< 100	< 100	< 100	< 100	< 50	< 1000	< 50	< 50	< 50	< 50	29
DE	< 10	< 10	< 10	< 10	< 5.0	< 100	< 5.0	< 5.0	< 5.0	< 5.0	< 5.0
EI	< 110	< 110	< 110	< 110	< 55	< 1100	< 55	< 55	< 55	< 55	< 55
LE	< 330	< 330	< 330	< 330	610	< 3300	< 170	< 170	< 170	< 170	< 170
HE	< 1000	< 1000	< 1000	< 1000	< 500	< 10000	< 500	< 500	< 500	< 500	< 500

ɔotor	1,2-DCA	MEK	1,1,1-TCA	CCl4	v-acetate	CHBrCl2	1,2-DCPA	1,3-DCPE	TCE	CHBr2Cl	1,1,2-TCA
SITE											
CL	< 50	< 1000	48	< 50	< 500	< 50	< 50	< 50	< 50	< 50	< 50
DE	< 5.0	< 100	11	< 5.0	< 50	< 5.0	< 5.0	< 5.0	6.4	< 5.0	< 5.0
EI	< 55	< 1100	750	< 55	< 550	< 55	< 55	< 55	< 55	< 55	< 55
LE	< 170	< 3300	1500	< 170	< 1700	< 170	< 170	< 170	< 170	< 170	< 170
HE	< 500	< 10000	2300	< 500	< 2500	< 500	< 500	< 500	< 500	< 500	< 500

ɔotor	bromoform	2-CVE	1,3-DCPE	CHBr3	Me-2-pen	2-hex'one	PCE	1,1,2,2PCA	toluene	Cl-benz	eth-benz
SITE											
CL	< 50	< 100	< 50	< 50	< 500	< 500	230	< 50	440	< 50	150
DE	52	< 8	< 5.0	< 5.0	< 50	< 50	84	< 5.0	550	< 5.0	270
EI	< 55	< 110	< 55	< 55	< 550	< 550	740	< 55	500	430	1700
LE	< 170	< 330	< 170	< 170	< 1700	< 1700	260	< 170	530	< 170	200
HE	< 500	< 1000	< 500	< 500	< 5000	< 5000	1000	< 500	4600	< 500	1800

ɔotor	styrene	xylenes	1,2-DCB	1,3-DCB	1,4-DCB
SITE					
CL	< 50	1200	< 100	< 100	< 100
DE	< 5.0	13000	< 5.0	47	< 5.0
EI	< 55	1200	250	< 55	100
LE	< 170	1400	<170	<170	<170
HE	< 500	8700	< 500	< 500	< 500

Dumpster Mud Wastes

Volatile Organics (EPA 8240) Analysis, ppm

	CH3Cl	CH3Br	C2H3Cl	C2H5Cl	CH2Cl2	acetone	CS2	1,1-DCE	1,1-DCA	1,2-DCE	CHCl3
											29
	< 100	< 100	< 100	< 100	< 50	< 1000	< 50	< 50	< 50	< 50	< 5.0
	< 10	< 10	< 10	< 10	< 5.0	< 100	< 5.0	< 5.0	< 5.0	< 5.0	< 55
	< 110	< 110	< 110	< 110	< 55	< 1100	< 55	< 55	< 55	< 55	< 170
	< 330	< 330	< 330	< 330	610	< 3300	< 170	< 170	< 170	< 170	< 500
	< 1000	< 1000	< 1000	< 1000	< 500	< 10000	< 500	< 500	< 500	< 500	

	1,2-DCA	MEK	1,1,1-TCA	CCl4	v-acetate	CHBrCl2	1,2-DCPA	1,3-DCPE	TCE	CHBr2Cl	1,1,2-TCA
	< 50	< 1000	48	< 50	< 500	< 50	< 50	< 50	< 50	< 50	< 50
	< 5.0	< 100	11	< 5.0	< 50	< 5.0	< 5.0	< 5.0	8.4	< 5.0	< 5.0
	< 55	< 1100	750	< 55	< 550	< 55	< 55	< 55	< 55	< 55	< 55
	< 170	< 3300	1500	< 170	< 1700	< 170	< 170	< 170	< 170	< 170	< 170
	< 500	< 10000	2300	< 500	< 2500	< 500	< 500	< 500	< 500	< 500	< 500

	benzene	2-CVE	1,3-DCPE	CHBr3	Me-2-pen	2-hex'one	PCE	1,1,2,2PCA	toluene	Cl-benz	eth-benz
							230	< 50	440	< 50	150
	< 50	< 100	< 50	< 50	< 500	< 500	84	< 5.0	550	< 5.0	270
	52	< 10	< 5.0	< 5.0	< 50	< 50	740	< 55	500	430	1700
	< 55	< 110	< 55	< 55	< 550	< 550	260	< 170	530	< 170	200
	< 170	< 330	< 170	< 170	< 1700	< 1700	1000	< 500	4600	< 500	1800
	< 500	< 1000	< 500	< 500	< 5000	< 5000					

	styrene	xylenes	1,2-DCB	1,3-DCB	1,4-DCB
	< 50	1200	< 100	< 100	< 100
	< 5.0	13000	< 5.0	47	< 5.0
	< 55	1200	250	< 55	100
	< 170	1400	< 170	< 170	< 170
	< 500	8700	< 500	< 500	< 500

Dumpster Mud Wastes

Semivolatile Organics (EPA 8270) Analysis, ppm

tor	phenol	b-2Cl-eth	2Cl-phenol	1,3-DCB	1,4-DCB	benzyl'ol	1,2-DCB	2Me-phene	b-2Cl-IPE	4Me-phene	N-nitroso
IE											
CL	< 2200	< 2200	< 2200	< 2200	< 2200	< 4400	< 2200	< 2200	< 2200	< 2200	< 2200
DE	< 3.0	< 3.0	< 3.0	< 3.0	< 3.0	< 3.0	< 3.0	25	< 3.0	< 3.0	< 3.0
CL	< 1100	< 1100	< 1100	< 1100	< 1100	< 2100	< 1100	< 1100	< 1100	< 1100	< 1100
LE	230	< 63	< 63	< 63	200	< 130	450	420	< 63	350	< 63
DE	< 100	< 100	< 100	< 100	< 100	< 100	< 100	< 100	< 100	< 100	< 100
CL	< 2500	< 2500	< 2500	99000	220000	< 5100	610000	< 2500	< 2500	< 2500	< 2500

tor	C2Cl6	nitrobenz	Isophorone	2nitroph'ol	2,4Meph'ol	benz acid	b-2Clethox	2,4-dClph	1,2,4-TCB	Naph'ene	4-Claniline
IE											
CL	< 2200	< 2200	< 2200	< 2200	< 2200	< 11000	< 2200	< 2200	< 2200	< 2200	< 4400
DE	< 3.0	< 3.0	< 3.0	< 3.0	< 3.0	< 15	< 3.0	< 3.0	< 3.0	180	< 3.0
CL	< 1100	< 1100	< 1100	< 1100	< 1100	< 5300	< 1100	< 1100	< 1100	1200	< 2100
LE	< 63	< 63	< 63	< 63	< 63	< 310	< 63	< 63	< 63	430	< 130
DE	< 100	< 100	< 100	< 100	< 100	< 500	< 100	< 100	< 100	1400	< 100
CL	< 2500	< 2500	< 2500	< 2500	6800	< 12000	< 2500	< 2500	< 2500	< 2500	< 5100

tor	Cl6butadien	4ClCMeph'ol	2-Menaph	Cl6cycpent	2,4,6tClph	2,4,5tClph	2-Clnaph	2-nitroanil	Me2phthal	acenaphthy	2,6-DNT
IE											
CL	< 2200	< 4400	< 2200	< 2200	< 2200	< 2200	< 2200	< 11000	< 2200	< 2200	< 2200
DE	< 3.0	< 3.0	120	< 3.0	< 3.0	< 15	< 3.0	< 15	< 3.0	< 3.0	< 3.0
CL	< 1100	< 2100	< 1100	< 1100	< 1100	< 1100	< 1100	< 5300	< 1100	< 1100	< 1100
LE	< 63	< 130	140	< 63	< 63	< 63	< 63	< 310	< 63	< 63	< 63
DE	< 100	< 100	1900	< 100	< 100	< 500	< 100	< 500	< 100	< 100	< 100
CL	< 2500	< 5100	< 2500	< 2500	< 2500	< 2500	< 2500	< 12000	< 2500	< 2500	< 2500

Dumpster Mud Wastes

Semivolatile Organics (EPA 8270) Analysis, ppm

3-nitroanil	acenaphthe	2,4dinitrophe	4nitrophenol	dibenfuran	2,4-DNT	dethylphthal	4Clphenphe	fluorene	4-nitroanil	4 6dn2Mep
< 11000	< 2200	< 11000	< 11000	< 2200	< 2200	< 2200	< 2200	< 2200	< 11000	< 11000
< 15	< 3.0	< 15	< 15	< 3.0	< 3.0	< 3.0	< 3.0	< 3.0	< 15	< 15
< 5300	< 1100	< 5300	< 5300	< 1100	< 1100	< 1100	< 1100	< 1100	< 5300	< 5300
< 310	< 63	< 310	< 310	< 63	< 63	< 63	< 63	< 63	< 310	< 310
< 500	< 100	< 500	< 500	< 100	< 100	< 100	< 100	< 100	< 500	< 500
< 12000	< 2500	< 12000	< 12000	< 2500	< 2500	< 2500	< 2500	< 2500	< 12000	< 12000

N-nitroso	4Brphenph	ClBenzene	Clphenol	phenanthre	anthracene	d-n-butpht	fluoranthen	pyrene	butbenzpht	3,3'Cl2benz
< 2200	< 2200	< 2200	< 11000	< 2200	< 2200	< 2200	< 2200	< 2200	< 2200	< 4400
< 3.0	< 3.0	< 3.0	< 15	5.2	< 3.0	20	< 3.0	< 3.0	< 3.0	< 6.0
< 1100	< 1100	< 1100	< 5300	< 1100	< 1100	< 1100	< 1100	< 1100	< 1100	< 2100
< 63	< 63	< 63	< 310	< 63	< 63	< 63	< 63	< 63	< 63	< 130
< 100	< 100	< 100	< 500	< 100	< 100	210	< 100	< 100	920	< 200
< 2500	< 2500	< 2500	< 12000	< 2500	< 2500	< 2500	< 2500	< 2500	< 2500	< 5100

ben[a]anthr	chrysene	b2ethhexph	d-n-octpht	ben[b]fluor	ben[k]fluor	ben[a]pyren	Ind[123-cd]	dben[a,h]an	ben[ghi]per
< 2200	< 2200	< 2200	< 2200	< 2200	< 2200	< 2200	< 2200	< 2200	< 2200
< 3.0	< 3.0	50	< 3.0	< 3.0	< 3.0	< 3.0	< 3.0	< 3.0	< 3.0
< 1100	< 1100	< 1100	< 1100	< 1100	< 1100	< 1100	< 1100	< 1100	< 1100
< 63	< 63	110	< 63	< 63	< 63	< 63	< 63	< 63	< 63
< 100	< 100	1700	100	< 100	< 100	< 100	< 100	< 100	< 100
< 2500	< 2500	< 2500	< 2500	< 2500	< 2500	< 2500	< 2500	< 2500	< 2500

Dumpster Mud Wastes

Physical Properties and TCLP Metals Analysis, ppm

Parameter	pH	SG	FP	As	Ba	Cd	Cr	Pb	Hg	Se	Ag
Reg Limit	<2 or >10	na	< 100	5	100	1	5	5	0.2	1	5
	10	na	115	< 0.5	0.85	0.8	0.06	2.2	0.002	< 0.2	< 0.01
	7	na	80	< 0.05	1	0.84	< 0.05	570	< 0.01	< 0.05	< 0.05
	8	na	115	< 0.05	0.9	1	< 0.05	1.3	< 0.01	< 0.05	< 0.05
	6.5	na	85	< 0.5	0.47	2	0.01	1.3	< 0.001	< 0.2	< 0.01
	7.9	1.2	85	< 1	0.41	2.8	0.02	4.6	< 0.002	< 1	< 0.5
	7.5	na	> 160	< 0.5	0.28	1.3	0.16	8.8	< 0.001	< 0.2	< 0.01

TCLP Semi Volatiles Analysis, ppm

Parameter	Cresol	2,4-DNT	Cl6-benz	Cl6-13-but	Cl6-eth	nitrobenz	Cl5-phenol	pyridine	2,4,5-TCP	2,4,6-TCP
Reg Limit	200	0.13	0.13	0.5	3	2	100	5	400	2
	10	< 0.33	< 0.33	< 0.33	< 0.33	< 0.33	< 1.7	< 1.7	< 0.33	< 0.33
	5	< 0.033	< 0.033	< 0.033	< 0.033	< 0.033	< 0.17	< 0.17	< 0.033	< 0.033
	96	< 0.091	< 0.091	< 0.091	< 0.091	< 0.091	< 0.46	< 0.46	< 0.091	< 0.091
	< 0.033	< 0.033	< 0.033	< 0.033	< 0.033	< 0.033	< 0.17	< 0.17	< 0.033	< 0.033
	0.88	< 0.066	< 0.066	< 0.066	< 0.066	< 0.066	< 0.34	< 0.34	< 0.066	< 0.066
	22	< 0.67	< 0.67	< 0.67	< 0.67	< 0.67	< 3.3	< 3.3	< 0.67	< 0.67

TCLP Volatiles Analysis, ppm

Parameter	benzene	CCl4	Clbenz	CHCl3	1,4-DClB	1,2-DCA	1,1-DCE	MEK	PCE	TCE	VChloride
Reg Limit	0.5	0.5	100	6	7.5	0.5	0.7	200	0.7	0.5	0.2
	0.11	< 0.10	< 0.10	< 0.10	< 0.20	< 0.10	< 0.10	< 2.0	0.96	< 0.10	< 0.20
	0.52	< 0.10	< 0.10	< 0.10	< 0.10	< 0.10	< 0.10	< 2.0	< 0.10	< 0.10	< 0.20
	< 0.10	< 0.10	< 0.10	< 0.10	< 0.10	< 0.10	< 0.10	< 2.0	0.16	< 0.10	< 0.20
	< 0.10	< 0.10	< 0.10	< 0.10	0.52	< 0.10	< 0.10	< 2.0	0.64	< 0.10	< 0.20
	0.1	< 0.05	< 0.05	< 0.05	< 0.1	< 0.05	< 0.05	15	0.17	0.14	< 0.1
	< 0.10	0.17	4.3	< 0.10	> 4.4	< 0.10	< 0.10	< 2.0	3.6	0.45	< 0.20

Immersion Cleaner Wastes

Physical Properties and TCLP Analysis, ppm

Parameter	Reg. Limit	# Samp	Avg	Min	Max
pH	<2 or >10	4	9.3	8.0	10.2
SG	na	4	1.05	0.93	1.20
FP	< 100	4	125	85	135
As	5	4	0.00	0.00	0.00
Ba	100	4	0.29	0.00	0.70
Cd	1	4	0.91	0.32	2.30
Cr	5	4	0.28	0.06	0.51
Pb	5	4	3.60	0.20	11.00
Hg	0.2	4	0.00	0.00	0.00
Se	1	4	0.00	0.00	0.00
Ag	5	4	0.00	0.00	0.00
cresol	200	3	400.00	0.00	1200.00
2.4-DNT	0.13	3	0.00	0.00	0.00
Cl6-benz	0.13	3	0.00	0.00	0.00
Cl6-13-but	0.5	3	0.00	0.00	0.00
Cl6-eth	3	3	0.00	0.00	0.00
nitrobenz	2	3	0.00	0.00	0.00
Cl5-phenol	100	3	0.00	0.00	0.00
pyridine	5	3	0.00	0.00	0.00
2.4.5-TCP	400	3	0.00	0.00	0.00
2.4.6-TCP	2	3	0.00	0.00	0.00
benzene	0.5	4	0.04	0.00	0.16
CCl4	0.5	4	0.63	0.00	2.50
Clbenz	100	4	4.39	0.00	13.00
CHCl3	6	4	0.14	0.00	0.56
1.4-DClB	7.5	4	13.75	1.60	32.00
1.2-DCA	0.5	4	1.43	0.00	3.60
1.1-DCE	0.7	4	0.03	0.00	0.11
MEK	200	4	4.85	0.00	15.00
PCE	0.7	4	1.97	0.00	4.40
TCE	0.5	4	1.38	0.00	4.40
VChloride	0.2	4	0.00	0.00	0.00

Less than values are treated as zeros in the statistical analysis
Greater than values are treated as the value in the statistical analysis

Immersion Cleaner Wastes

Volatile Organics (EPA 8240) Analysis, ppm

matrix	CH3Cl	CH3Br	C2H3Cl	C2H5Cl	CH2Cl2	acetone	CS2	1,1-DCE	1,1-DCA	1,2-DCE	CHCl3
SITE											
CL	< 5000	< 5000	< 5000	< 5000	350000	< 50000	< 2500	< 2500	< 2500	< 2500	2700
DE	< 8400	< 8400	< 8400	< 8400	162000	< 84000	< 4200	< 4200	< 4200	< 4200	< 4200
FI	< 1100	< 1100	< 1100	< 1100	< 530	< 11000	< 530	< 530	< 530	< 530	< 530
HE	< 120	< 120	< 120	< 120	2200	< 1200	< 60	< 60	< 60	< 60	< 60

matrix	1,2-DCA	MEK	1,1,1-TCA	CCl4	v-acetate	CHBrCl2	1,2-DCPA	1,3-DCPE	TCE	CHBr2Cl	1,1,2-TCA
SITE											
CL	< 2500	< 50000	< 2500	< 2500	< 25000	< 2500	< 2500	< 2500	< 2500	< 2500	< 2500
DE	< 4200	< 84000	< 4200	< 4200	< 42000	< 4200	< 4200	< 4200	< 4200	< 4200	< 4200
FI	< 530	< 11000	< 530	< 530	< 5300	< 530	< 530	< 530	< 530	< 530	< 530
HE	< 60	< 1200	< 60	< 60	< 600	< 60	< 60	< 60	< 60	< 60	< 60

matrix	benzene	2-CVE	1,3-DCPE	CHBr3	Me-2-pen	2-hex'one	PCE	1,1,2,2PCA	toluene	Cl-benz	eth-benz
SITE											
CL	< 2500	< 5000	< 2500	< 2500	< 25000	< 25000	3600	< 2500	< 2500	5800	< 2500
DE	< 4200	< 8400	< 4200	< 4200	< 42000	< 42000	< 4200	< 4200	< 4200	63000	< 4200
FI	< 530	< 1100	< 530	< 530	< 5300	< 5300	< 530	< 530	< 530	< 530	< 530
HE	< 60	< 120	< 60	< 60	< 600	< 600	480	< 60	190	< 60	89

matrix	styrene	xylenes	1,2-DClB	1,3-DClB	1,4-DClB
SITE					
CL	< 2500	< 2500	< 5000	12000	24000
DE	< 4200	< 4200	161000	21000	43000
FI	< 530	< 530	2000	< 530	600
HE	210	590	590	170	270

Immersion Cleaner Wastes

Semivolatile Organics (EPA 8270) Analysis, ppm

matrix	phenol	b-2Cl-eth	2Cl-phenol	1,3-DClB	1,4-DClB	benzyl alc	1,2-DClB	2Me-phenol	b-2Cl-iPE	4Me-phenol	N-nitroso
SITE											
CL	55	< 10	< 10	26	50	< 20	180	49	< 10	32	< 10
DE	3000	< 1000	< 1000	< 1000	< 1000	< 1000	1600	1400	< 1000	1900	< 1000
FL	< 1100	< 1100	< 1100	< 1100	< 1100	< 2100	1200	< 1100	< 1100	< 1100	< 1100
HE	< 100	< 100	< 100	100	330	180	< 100	< 100	< 100	< 100	< 100

matrix	C2Cl6	nitrobenz	Isophorone	2nitroph'ol	2,4Mnph'ol	benz acid	b-2Clethox	2,4-dClph	1,2,4-TClB	Naph'ene	4-Claniline
SITE											
CL	< 10	< 10	< 10	< 10	< 10	< 50	< 10	< 10	< 10	< 10	< 20
DE	< 1000	< 1000	< 1000	< 1000	< 1000	< 5000	< 1000	< 1000	< 1000	< 1000	< 1000
FL	< 1100	< 1100	< 1100	< 1100	< 1100	< 5300	< 1100	< 1100	< 1100	34000	< 2100
HE	< 100	< 100	< 100	< 100	< 100	< 500	< 100	< 100	< 100	35000	< 100

matrix	Cl6butadien	4Cl3Mcphol	2-Menaph	Cl6cycpent	2,4,6tClph	2,4,5tClph	2-Clnaph	2-nitroanil	Me2phthal	acenaphthy	2,6-DNT
SITE											
CL	< 10	< 20	< 10	< 10	< 10	< 10	< 10	< 50	< 10	< 10	< 10
DE	< 1000	< 1000	< 1000	< 1000	< 1000	< 5000	< 1000	< 5000	< 1000	< 1000	< 1000
FL	< 1100	< 2100	< 1100	< 1100	< 1100	< 1100	< 1100	< 5300	< 1100	< 1100	< 1100
HE	< 100	< 100	1300	< 100	< 100	< 500	< 100	< 500	< 100	< 100	< 100

matrix	3-nitroanil	acenaphthe	2,4dnitrophe	4nitrophenol	dibenfuran	2,4-DNT	dethphthal	4Clphenphe	fluorene	4-nitroanil	4,6dn2Mcp
SITE											
CL	< 50	< 10	< 50	< 50	< 10	< 10	< 10	< 10	< 10	< 50	< 50
DE	< 5000	< 1000	< 5000	< 5000	< 1000	< 1000	< 1000	< 1000	< 1000	< 5000	< 5000
FL	< 5300	< 1100	< 5300	< 5300	< 1100	< 1100	< 1100	< 1100	< 1100	< 5300	< 5300
HE	< 500	< 100	< 500	< 500	< 100	< 100	< 100	< 100	< 100	< 500	< 500

Immersion Cleaner Wastes

Semivolatile Organics (EPA 8270) Analysis, ppm

matrix	N-nitroso	4Brphenph	Cl6benzene	Cl5phenol	phenanthre	anthracene	d-n-butpht	fluoranthen	pyrene	butbenzpht	3,3'Cl2benz
SITE											
CL	< 10	< 10	< 10	< 50	< 10	< 10	< 10	< 10	< 10	< 10	< 20
DE	< 1000	< 1000	< 1000	< 5000	< 1000	< 1000	< 1000	< 1000	< 1000	< 1000	< 2000
EL	< 1100	< 1100	< 1100	< 5300	< 1100	< 1100	< 1100	< 1100	< 1100	< 1100	< 2100
DE	< 100	< 100	< 100	< 500	< 100	< 100	< 100	< 100	< 100	< 100	< 200

matrix	ben[a]anthr	chrysene	b2ethhexph	d-n-octpht	ben[b]fluor	ben[k]fluor	ben[a]pyren	ind[123-cd]	dben[a,h]an	ben[ghi]per
SITE										
CL	< 10	< 10	< 10	< 10	< 10	< 10	< 10	< 10	< 10	< 10
DE	< 1000	< 1000	< 1000	< 1000	< 1000	< 1000	< 1000	< 1000	< 1000	< 1000
EL	< 1100	< 1100	< 1100	< 1100	< 1100	< 1100	< 1100	< 1100	< 1100	< 1100
DE	< 100	< 100	< 100	< 100	< 100	< 100	< 100	< 100	< 100	< 100

Immersion Cleaner Wastes

Physical Properties and TCLP Metals Analysis, ppm

Parameter	pH	SG	FP	As	Ba	Cd	Cr	Pb	Hg	Se	Ag
Reg. Limit	<2 or >10	na	< 100	5	100	1	5	5	0.2	1	5
SHE											
CI	8	1.2	95	< 0.5	0.44	2.3	0.51	11	0.001	< 0.2	< 0.01
DE	9	1.11	85	< 0.05	0.7	0.4	0.48	2	< 0.01	< 0.05	< 0.05
EL	10	0.945	185	< 0.05	< 0.3	0.32	0.06	1.2	< 0.01	< 0.05	< 0.05
HE	10.2	0.93	135	< 1	< 0.02	0.64	0.07	0.2	< 0.002	< 1	< 0.5

TCLP Semi Volatiles Analysis, ppm

Parameter	cresol	2,4-DNT	Cl6-benz	Cl6-1,3-but	Cl6-eth	nitrobenz	Cl5-phenol	pyridine	2,4,5-TCP	2,4,6-TCP
Reg. Limit	200	0.13	0.13	0.5	3	2	100	5	400	2
SHE										
CI	< 1.0	< 1.0	< 1.0	< 1.0	< 1.0	< 1.0	< 5.0	< 5.0	< 1.0	< 1.0
DE	1200	< 0.33	< 0.33	< 0.33	< 0.33	< 0.33	< 1.7	< 1.7	< 0.33	< 0.33
EL	matrix	matrix	matrix	matrix	matrix	matrix	matrix	matrix	matrix	matrix
HE	< 0.33	< 0.33	< 0.33	< 0.33	< 0.33	< 0.33	< 1.7	< 1.7	< 0.33	< 0.33

TCLP Volatiles Analysis, ppm

Parameter	benzene	CCl4	Clbenz	CHCl3	1,4-DClB	1,2-DCA	1,1-DCE	MEK	PCE	TCE	VChloride
Reg. Limit	0.5	0.5	100	6	7.5	0.5	0.7	200	0.7	0.5	0.2
SHE											
CI	0.16	2.5	> 4.4	0.56	> 4.4	3.6	< 0.10	> 4.4	> 4.4	> 4.4	< 0.20
DE	< 0.10	< 0.10	13	< 0.10	17	2.1	0.11	15	0.68	1.1	< 0.20
EL	< 5	< 5	< 5	< 5	32	< 5	< 5	< 100	< 5	< 5	< 10
HE	< 0.05	< 0.05	0.14	< 0.05	1.6	< 0.05	< 0.05	< 1	2.8	< 0.05	< 0.1

Dry Cleaner Solvent Wastes

Physical Properties and TCLP Analysis, ppm

Parameter	Reg. Limit	# Samp	Avg	Min	Max
pH	<2 or >10	3	7.0	6.0	8.0
SG	na	2	1.14	1.03	1.25
FP	< 100	3	90	80	105
As	5	3	0.00	0.00	0.00
Ba	100	3	0.52	0.37	0.80
Cd	1	3	0.25	0.05	0.45
Cr	5	3	0.13	0.13	0.26
Pb	5	3	1.00	0.20	1.70
Hg	0.2	3	0.00	0.00	0.00
Se	1	3	0.00	0.00	0.00
Ag	5	3	0.00	0.00	0.00
cresol	200	3	0.02	0.00	0.06
2.4-DNT	0.13	3	0.00	0.00	0.00
Cl6-benz	0.13	3	0.00	0.00	0.00
Cl6-13-but	0.5	3	0.00	0.00	0.00
Cl6-eth	3	3	0.00	0.00	0.00
nitrobenz	2	3	0.00	0.00	0.00
Cl5-phenol	100	3	0.00	0.00	0.00
pyridine	5	3	0.00	0.00	0.00
2.4.5-TCP	400	3	0.00	0.00	0.00
2.4.6-TCP	2	3	0.00	0.00	0.00
benzene	0.5	3	0.00	0.00	0.00
CCl4	0.5	3	0.00	0.00	0.00
Clbenz	100	3	0.00	0.00	0.00
CHCl3	6	3	0.00	0.00	0.00
1.4-DClB	7.5	3	0.00	0.00	0.00
1.2-DCA	0.5	3	0.00	0.00	0.00
1.1-DCE	0.7	3	0.05	0.00	0.14
MEK	200	3	0.00	0.00	0.00
PCE	0.7	3	4.40	4.40	4.40
TCE	0.5	3	0.06	0.00	0.17
VChloride	0.2	3	0.00	0.00	0.00

Less than values are treated as zeros in the statistical analysis
Greater than values are treated as the value in the statistical analysis

Dry Cleaner Solvent Wastes

Volatile Organics (EPA 8240) Analysis, ppm

aramotor		CH3Cl	CH3Br	C2H3Cl	C2H5Cl	CH2Cl2	acetone	CS2	1.1-DCE	1.1-DCA	1.2-DCE	CHCl3
AB	SITE											
W	DE	< 10	< 10	< 10	< 10	< 5.0	200	< 5.0	< 5.0	< 5.0	< 5.0	< 5.0
W	HE	< 7700	< 7700	< 7700	< 7700	< 3900	< 77000	< 3900	< 3900	< 3900	< 3900	< 3900
M	LE	< 300	< 300	< 300	< 300	< 150	< 3000	< 150	< 150	< 150	< 150	< 150

aramotor		1,2-DCA	MEK	1.1.1-TCA	CCl4	v-acetate	CHBrCl2	1.2-DCPA	1.3-DCPE	TCE	CHBr2Cl	1.1.2-TCA
AB	SITE											
W	DE	< 5.0	< 100	18	< 5.0	< 50	< 5.0	< 5.0	< 5.0	6.4	< 5.0	< 5.0
W	HE	< 3900	< 3900	< 3900	< 3900	< 39000	< 3900	< 3900	< 3900	< 3900	< 3900	< 3900
M	LE	< 150	< 3000	< 150	< 150	< 1500	< 150	< 150	< 150	< 150	< 150	< 150

aramotor		benzene	2-CVE	1.3-DCPE	CHBr3	Me-2-pen	2-hex'one	PCE	1.1.2.2PCA	toluene	Cl-benz	eth-benz
AB	SITE											
W	DE	< 5.0	[illegible]0	< 5.0	< 5.0	< 50	< 50	25000	< 5.0	32	< 5.0	< 5.0
W	HE	< 3900	[illegible]	< 3900	< 3900	< 39000	< 39000	510000	< 3900	4800	< 3900	< 3900
M	LE	< 150	< 300	< 150	< 150	< 1500	< 1500	72000	< 150	< 150	< 150	< 150

aramotor		styrene	xylenes	1.2-DCB	1.3-DCB	1.4-DCB
AB	SITE					
W	DE	< 5.0	62	130	36	76
W	HE	< 3900	14000	< 3900	< 3900	< 3900
M	LE	< 150	< 150	< 150	< 150	< 150

Dry Cleaner Solvent Wastes

Semivolatile Organics (EPA 8270) Analysis, ppm

aramotor		phenol	b-2Cl-ethr	2Cl-phenol	1,3-DClB	1,4-DClB	benzyl 'ol	1,2-DClB	2Me-phenol	b-2Cl-IPE	4Me-phenol	N-nitroso
AB	SITE											
V	DE	< 3.0	< 3.0	< 3.0	3.8	3.8	< 3.0	< 3.0	13	< 3.0	15	< 3.0
V	HE	< 770	< 770	< 770	< 770	< 770	< 1500	< 770	< 770	< 770	< 770	< 770
M	LE	74	< 42	< 42	< 42	< 42	< 84	< 42	< 42	< 42	< 42	< 42

aramotor		C2Cl6	nitrobenz	Isophorone	2nitroph'ol	2,4Meph'ol	benz ackd	b-2Clethox	2,4-dClph	1,2,4-TClB	Naph'ene	4-Clanilline
AB	SITE											
V	DE	< 3.0	< 3.0	< 3.0	< 3.0	< 3.0	< 15	< 3.0	< 3.0	< 3.0	27	< 3.0
V	HE	< 770	< 770	< 770	< 770	< 770	< 3900	< 770	< 770	< 770	< 770	< 1500
M	LE	< 42	< 42	< 42	< 42	< 42	< 200	< 42	< 42	< 42	< 42	< 84

aramotor		ClBnotadien	4ClPhphnl	2-Menaph	Cl6cycpent	2,4,6tClph	2,4,5tClph	2-Clnaph	2-nitroanil	Me2phthal	acenaphthy	2,6-DNT
AB	SITE											
V	DE	< 3.0	< 3.0	3.9	< 3.0	< 3.0	< 15	< 3.0	< 15	< 3.0	< 3.0	< 3.0
V	HE	< 770	< 1500	< 770	< 770	< 770	< 770	< 770	< 3900	< 770	< 770	< 770
M	LE	< 42	< 84	< 42	< 42	< 42	< 42	< 42	< 200	< 42	< 42	< 42

aramotor		3-nitroanil	acenaphtho	2,4dnitrophe	4nitrophenol	dibenfuran	2,4-DNT	dethphthal	4Clphenophe	fluorene	4-nitroanil	4,6dn2Mep
AB	SITE											
V	DE	< 15	< 3.0	< 15	< 15	< 3.0	< 3.0	9	< 3.0	< 3.0	< 15	< 15
V	HE	< 3900	< 770	< 3900	< 3900	< 770	< 770	< 770	< 770	< 770	< 3900	< 3900
M	LE	< 200	< 42	< 200	< 200	< 42	< 42	< 42	< 42	< 42	< 200	< 200

Dry Cleaner Solvent Wastes

Semivolatile Organics (EPA 8270) Analysis, ppm

Parameter		N-nitroso	4Brphenph	Cl6benzene	Cl5phenol	phenanthre	anthracene	d-n-butpht	fluoranthen	pyrene	butbenzpht	3,3'Cl2benz
AB	SITE											
W	DE	< 3.0	< 3.0	< 3.0	< 15	< 3.0	< 3.0	28	< 3.0	< 3.0	180	< 6.0
W	HE	< 770	< 770	< 770	< 3900	< 770	< 770	< 770	< 770	< 770	< 770	< 1500
M	LE	< 42	< 42	< 42	< 200	< 42	< 42	< 42	< 42	< 42	110	< 84

Parameter		ben[a]anthr	chrysene	b2ethhexph	d-n-octpht	ben[b]fluor	ben[k]fluor	ben[a]pyren	ind[123-cd]	dben[a,h]an	ben[ghi]per
AB	SITE										
W	DE	< 3.0	< 3.0	320	34	< 3.0	< 3.0	< 3.0	< 3.0	< 3.0	< 3.0
W	HE	< 770	< 770	< 770	< 770	< 770	< 770	< 770	< 770	< 770	< 770
M	LE	< 42	< 42	64	< 42	< 42	< 42	< 42	< 42	< 42	< 42

Dry Cleaner Solvent Wastes

Physical Properties and TCLP Metals Analysis, ppm

Parameter	pH	SG	FP	As	Ba	Cd	Cr	Pb	Hg	Se	Ag
Reg Limit	<2 or >10	na	< 100	5	100	1	5	5	0.2	1	5
D SHE											
DE	7	1.03	80	< 0.05	0.8	0.24	0.15	1.7	< 0.01	< 0.05	< 0.05
HE	6	1.25	85	< 0.05	0.4	0.05	0.13	0.2	< 0.01	< 0.05	< 0.05
LE	8	matrix	105	< 0.5	0.37	0.45	0.26	1.1	< 0.001	< 0.2	< 0.01

TCLP Semi Volatiles Analysis, ppm

Parameter	cresol	2,4-DNT	Cl6-benz	Cl6-1,3-but	Cl6-eth	nitrobenz	Cl5-phenol	pyridine	2,4,5-TCP	2,4,6-TCP
Reg Limit	200	0.13	0.13	0.5	3	2	100	5	400	2
D SHE										
DE	< 0.33	< 0.33	< 0.33	< 0.33	< 0.33	< 0.33	< 1.7	< 1.7	< 0.33	< 0.33
HE	< 0.060	< 0.060	< 0.060	< 0.060	< 0.060	< 0.060	< 0.30	< 0.30	< 0.060	< 0.060
LE	0.059	< 0.033	< 0.033	< 0.033	< 0.033	< 0.033	< 0.17	< 0.17	< 0.033	< 0.033

TCLP Volatiles Analysis, ppm

Parameter	benzene	CCl4	Clbenz	CHCl3	1,4-DCB	1,2-DCA	1,1-DCE	MEK	PCE	TCE	VChloride
Reg Limit	0.5	0.5	100	6	7.5	0.5	0.7	200	0.7	0.5	0.2
D SHE											
DE	< 0.10	< 0.10	< 0.10	< 0.10	< 0.10	< 0.10	< 0.10	< 2.0	> 4.4	< 0.10	< 0.20
HE	< 0.10	< 0.10	< 0.10	< 0.10	< 0.10	< 0.10	0.14	< 2.0	> 4.4	0.17	< 0.20
LE	< 0.10	< 0.10	< 0.10	< 0.10	< 0.20	< 0.10	< 0.10	< 2.0	> 4.4	< 0.10	< 0.20

Paint Gun Cleaner Wastes

Physical Properties and TCLP Analysis, ppm

Parameter	Reg. Limit	# Samp	Avg	Min	Max
pH	<2 or >10	2	6.3	6.0	6.5
SG	na	2	0.894	0.851	0.937
FP	< 100	2	75	75	75
As	5	2	0.00	0.00	0.00
Ba	100	2	0.80	0.60	1.00
Cd	1	2	0.36	0.00	0.72
Cr	5	2	0.46	0.21	0.72
Pb	5	2	1.35	0.30	2.40
Hg	0.2	2	0.00	0.00	0.00
Se	1	2	0.00	0.00	0.00
Ag	5	2	0.00	0.00	0.00
cresol	200	2	4.85	0.00	9.70
2.4-DNT	0.13	2	0.00	0.00	0.00
Cl6-benz	0.13	2	0.00	0.00	0.00
Cl6-13-but	0.5	2	0.00	0.00	0.00
Cl6-eth	3	2	0.00	0.00	0.00
nitrobenz	2	2	0.00	0.00	0.00
Cl5-phenol	100	2	0.00	0.00	0.00
pyridine	5	2	0.00	0.00	0.00
2.4.5-TCP	400	2	0.00	0.00	0.00
2.4.6-TCP	2	2	0.00	0.00	0.00
benzene	0.5	2	0.16	0.14	0.18
CCl4	0.5	2	0.00	0.00	0.00
Clbenz	100	2	0.00	0.00	0.00
CHCl3	6	2	0.00	0.00	0.00
1.4-DClB	7.5	2	0.00	0.00	0.00
1.2-DCA	0.5	2	0.06	0.00	0.12
1.1-DCE	0.7	2	0.00	0.00	0.00
MEK	200	2	2100.00	200.00	4000.00
PCE	0.7	2	0.31	0.00	0.61
TCE	0.5	2	0.80	0.00	1.60
VChloride	0.2	2	0.00	0.00	0.00

Less than values are treated as zeros in the statistical analysis
Greater than values are treated as the value in the statistical analysis

Paint Gun Cleaner Wastes

Volatile Organics (EPA 8240) Analysis, ppm

ameter	CH3Cl	CH3Br	C2H3Cl	C2H5Cl	CH2Cl2	acetone	CS2	1,1-DCE	1,1-DCA	1,2-DCE	CHCl3
SITE											
DE	< 11000	< 11000	< 11000	< 11000	< 5600	< 120000	< 5600	< 5600	< 5600	< 5600	< 5600
DO	< 11000	< 11000	< 11000	< 11000	270000	< 110000	< 5300	< 5300	< 5300	< 5300	< 5300

ameter	1,2-DCA	MEK	1,1,1-TCA	CCl4	v-acetate	CHBrCl2	1,2-DCPA	1,3-DCPE	TCE	CHBr2Cl	1,1,2-TCA
SITE											
DE	< 5600	< 120000	< 5600	< 5600	< 56000	< 5600	< 5600	< 5600	< 5600	< 5600	< 5600
DO	< 5300	< 110000	< 5300	< 5300	< 53000	< 5300	< 5300	< 5300	< 5300	< 5300	< 5300

ameter	bromo	2-CVE	1,3-DCPE	CHBr3	Me-2-pen	2-hex'one	PCE	1,1,2,2PCA	toluene	Cl-benz	eth-benz
SITE											
DE	< 5600	< 11000	< 5600	< 5600	< 56000	< 56000	< 5600	< 5600	290000	< 5600	33000
DO	< 5300	< 11000	< 5300	< 5300	< 53000	< 53000	< 5300	< 5300	300000	< 5300	13000

ameter	styrene	xylenes	1,2-DCB	1,3-DCB	1,4-DCB
SITE					
DE	< 5600	54000	< 5600	< 5600	< 5600
DO	< 5300	55000	< 5300	< 5300	< 5300

Paint Gun Cleaner Wastes

Semivolatile Organics (EPA 8270) Analysis, ppm

ameter	phenol	b-2Cl-ethr	2Cl-phenol	1,3-DClB	1,4-DClB	benzyl 'ol	1,2-DClB	2Me-phenol	b-2Cl-IPE	4Me-phenol	N-nitroso
SITE											
DE	< 1000	< 1000	< 1000	< 1000	< 1000	< 1000	< 1000	< 1000	< 1000	< 1000	< 1000
DO	< 1100	< 1100	< 1100	< 1100	< 1100	< 2100	< 1100	< 1100	< 1100	< 1100	< 1100

ameter	C2Cl6	nitrobenz	Isophorone	2nitroph'ol	2,4Meph'ol	benz acid	b-2Clethox	2,4-dClph	1,2,4-TClB	Naph'ene	4-Clanline
SITE											
DE	< 1000	< 1000	< 1000	< 1000	< 1000	< 5000	< 1000	< 1000	< 1000	< 1000	< 1000
DO	< 1100	< 1100	< 1100	< 1100	< 1100	< 5300	< 1100	< 1100	< 1100	< 1100	< 2100

ameter	Cl6butadien	4Cl3Mephnol	2-Menaph	Cl6cycpent	2,4,6tClph	2,4,5tClph	2-Clnaph	2-nitroanil	Me2phthal	acenaphthy	2,6-DNT
SITE											
DE	< 1000	< 1000	< 1000	< 1000	< 1000	< 5000	< 1000	< 5000	< 1000	< 1000	< 1000
DO	< 1100	< 2100	< 1100	< 1100	< 1100	< 1100	< 1100	< 5300	< 1100	< 1100	< 1100

ameter	3-nitroanil	acenaphthe	2,4dntrophe	4nitrophenol	dibenfuran	2,4-DNT	dethphthal	4Cliphenphe	fluorene	4-nitroanil	4,6dn2Mep
SITE											
DE	< 5000	< 1000	< 5000	< 5000	< 1000	< 1000	< 1000	< 1000	< 1000	< 5000	< 5000
DO	< 5300	< 1100	< 5300	< 5300	< 1100	< 1100	< 1100	< 1100	< 1100	< 5300	< 5300

ameter	N-nitroso	4Brphenph	Cl6benzene	Cl5phenol	phenanthre	anthracene	d-n-butpht	fluoranthen	pyrene	butbenzph	3,3'Cl2benz
SITE											
DE	< 1000	< 1000	< 1000	< 5000	< 1000	< 1000	< 1000	< 1000	< 1000	< 1000	< 2000
DO	< 1100	< 1100	< 1100	< 5300	< 1100	< 1100	< 1100	< 1100	< 1100	1600	< 2100

ameter	ben[a]anthr	chrysene	b2ethhxph	d-n-octpht	ben[b]fluor	ben[k]fluor	ben[a]pyren	ind[123-cd]	dben[a,h]an	ben[ghi]per	
SITE											
DE	< 1000	< 1000	< 1000	< 1000	< 1000	< 1000	< 1000	< 1000	< 1000	< 1000	
DO	< 1100	< 1100	< 1100	< 1100	< 1100	< 1100	< 1100	< 1100	< 1100	< 1100	

Paint Gun Cleaner Wastes

Physical Properties and TCLP Metals Analysis, ppm

Parameter	pH	SG	FP	As	Ba	Cd	Cr	Pb	Hg	Se	Ag
Reg. Limit	<2 or >10	na	< 100	5	100	1	5	5	0.2	1	5
AD SITE											
V DE	6	0.851	75	< 0.05	1	< 0.05	0.21	0.3	< 0.01	< 0.05	< 0.05
V DO	6.5	0.937	75	< 0.05	0.6	0.72	0.72	2.4	< 0.01	< 0.05	< 0.05

TCLP Semi Volatiles Analysis, ppm

Parameter	cresol	2,4-DNT	Cl6-benz	Cl6-13-but	Cl6-eth	nitrobenz	Cl5-phenol	pyridine	2,4,5-TCP	2,4,6-TCP
Reg. Limit	200	0.13	0.13	0.5	3	2	100	5	400	2
AD SITE										
V DE	< 0.033	< 0.033	< 0.033	< 0.033	< 0.033	< 0.033	< 0.17	< 0.17	< 0.033	< 0.033
V DO	9.7	< 2.6	< 2.6	< 2.6	< 2.6	< 2.6	< 13	< 13	< 2.6	< 2.6

TCLP Volatiles Analysis, ppm

Parameter	benzene	CCl4	Clbenz	CHCl3	1,4-DClB	1,2-DCA	1,1-DCE	MEK	PCE	TCE	VChloride
Reg. Limit	0.5	0.5	100	6	7.5	0.5	0.7	200	0.7	0.5	0.2
AD SITE											
V DE	0.18	< 0.10	< 0.10	< 0.10	< 0.10	< 0.10	< 0.10	4000	< 0.10	< 0.10	< 0.20
V DO	0.14	< 0.10	< 0.10	< 0.10	< 0.10	0.12	< 0.10	> 200	0.61	1.6	< 0.20

Antifreeze Wastes

Physical Properties and TCLP Metals Analysis, ppm

	Parameter	pH	SG	FP	As	Ba	Cd	Cr	Pb	Hg	Se	Ag
	Reg. Limit	<2 or >10	na	< 100	5	100	1	5	5	0.2	1	5
TAB SITE												
W	DU	7.5	1.04	> 200	< 0.05	< 0.3	< 0.05	< 0.05	0.3	< 0.01	< 0.05	< 0.05
W	EL	8	1.13	> 200	< 0.05	0.3	< 0.05	< 0.05	< 0.1	< 0.01	< 0.05	< 0.05
W	WL	8.5	1.05	> 200	< 0.05	< 0.3	< 0.05	< 0.05	0.2	< 0.01	< 0.05	< 0.05

TCLP Semi Volatiles Analysis, ppm

	Parameter	cresol	2,4-DNT	Cl6-benz	Cl6-13-but	Cl6-eth	nitrobenz	Cl5-phenol	pyridine	2,4,5-TCP	2,4,6-TCP
	Reg. Limit	200	0.13	0.13	0.5	3	2	100	5	400	2
AB SITE											
W	DU	< 0.04	< 0.04	< 0.04	< 0.04	< 0.04	< 0.04	< 0.2	< 0.2	< 0.04	< 0.04
V	EL	0.2	< 0.07	< 0.07	< 0.07	< 0.07	< 0.07	< 0.35	< 0.35	< 0.07	< 0.07
V	WL	< 0.05	< 0.05	< 0.05	< 0.05	< 0.05	< 0.05	< 0.25	< 0.25	< 0.05	< 0.05

TCLP Volatiles Analysis, ppm

	Parameter	benzene	CCl4	Clbenz	CHCl3	1,4-DClB	1,2-DCA	1,1-DCE	MEK	PCE	TCE	VChloride
	Reg. Limit	0.5	0.5	100	6	7.5	0.5	0.7	200	0.7	0.5	0.2
B SITE												
	DU	< 0.10	< 0.10	< 0.10	< 0.10	< 0.10	< 0.10	< 0.10	< 2.0	0.13	0.07	< 0.20
	EL	0.32	< 0.10	< 0.10	< 0.10	< 0.10	< 0.10	< 0.10	< 2.0	0.12	< 0.10	< 0.20
	WL	< 0.10	< 0.10	< 0.10	< 0.10	< 0.10	< 0.10	< 0.10	< 2.0	0.51	< 0.10	< 0.10

ATTACHMENT II.A.6

WASTE ANALYSIS PLAN

ATTACHMENT II.A.6
WASTE ANALYSIS PLAN

GENERAL

The used solvents are the primary feed stock for regeneration of Safety-Kleen's clean solvent products. Quality control of the used solvents is critical to the recycle center to safely recycle the material and to assure quality products. The closed loop system of managing the clean and used solvents is therefore designed to minimize the possibility of product contamination from outside sources other than Safety-Kleen customers. Within the closed loop, ownership of the material remains with Safety-Kleen and the product is leased to the customer.

Where the possibility exists for contamination of the mineral spirits by unusual substances, e.g., pesticides, herbicides, pharmaceuticals, printing operations, the process is reviewed to ensure that contamination of Safety-Kleen's product does not occur.

Sales representatives are instructed to visually examine the spent product when the machines are serviced, noting the consistency and volume of material recovered. If problems are noted, the machine is removed from the customer.

The dry cleaning wastes are collected from dry cleaning facilities where only a single chemical is handled at the facility and chances of cross contamination by other chemicals or wastes are minimal. In addition, each shipment from the dry cleaning facility will be manifested with signature of the owner (generator) for the type of materials contained in the drums.

All the materials collected at the Service Center and subsequently shipped to the Safety-Kleen recycle facility are either managed at all times in the closed loop system or will

be collected from a single purpose process. General nature and quality of these materials are known and Safety-Kleen's operating experiences have shown that the collected materials do not usually deviate from expectations that would impact the recycling process. As an additional safeguard, Safety-Kleen's personnel are instructed to inspect all materials before returning them to the service centers.

For these reasons, all waste analyses are performed at the recycle facility, as described in the following section, and only visual and physical inspection is conducted in conjunction with service center operations.

In accordance with 40 CFR 264.13(a), Safety-Kleen will also perform physical and chemical analysis of a waste stream when it is notified or has reason to believe that the process or operation generating the waste has changed, or when the result of inspection indicates that the waste to be collected does not match the waste designated. It is Safety-Kleen's practice that suspected nonconforming material must not be accepted until an analysis has been done or the material must be rejected.

WASTE ANALYSES AT THE RECYCLE FACILITY

Analyses performed at the recycle facilities are undertaken to safeguard the recycling process and to assure the product quality. The following tables summarize a typical waste analysis plan at the recycle facility related to the hazardous materials returned from the service center:

Table II.A.6-1	Parameters and Rationale for Hazardous Waste Identification
Table II.A.6-2	Parameters and Test Methods
Table II.A.6-3	Methods Used to Sample Hazardous Wastes
Table II.A.6-4	Frequency of Analysis

TABLE II.A.6-1
PARAMETERS AND RATIONALE
FOR HAZARDOUS WASTE IDENTIFICATION

Hazardous Waste	Parameter[a]	Rationale
1. Used Immersion Cleaner (609IC)	Methylene Chloride Orthodichlorobenzene Cresylic Acid	Formula contains these ingredients: F002 & Cresylic Acid F004
2. Used Immersion Cleaner (699IC)	TCLP	May contain these compounds
3. Used Mineral Spirits	Flash Point TCLP	Ignitable characteristics D001; may contain these compounds
4. Mineral Spirits Tank Bottom Sludge and Free Water	TCLP Flash Point	The sludge and free water may contain these compounds and the sludge has a flash point of 105° F (D001)
5. Mineral Spirits Dumpster Mud	TCLP Flash Point	The sludge and free water may contain these compounds and the sludge has a flash point of 105° F (D001)
6. Dry Cleaning Wastes	Perchloroethylene Trichlorotrifluoroethane Mineral Spirits	Contain ingredient of F002 or contains a hazardous constituent. Ignitable characteristics D001
7. Paint Wastes	Toluene, Xylene, Methyl ethyl ketone, Methyl isobutyl ketone, Acetone, Isopropanol, Methanol, Ethanol, Normal butyl acetate, Isobutyl acetate, Cadmium, Chromium, Lead	Contains these components: F003, F005, D001, D006, D007, and D008
8. Spent Antifreeze	TCLP	May contain these compounds

FOOTNOTE:

[a] TCLP Waste Codes: D004-D011, D018, D019, D021-D030, D032-D043.

TABLE II.A.6-2

PARAMETERS AND TEST METHODS

Parameter	Test Method	Reference
pH	pH Meter	ASTM Standard D1293-65
Flash Point	Tag closed cup tester	ASTM Standard D56-79
TCLP	Toxicity Characteristic Leaching Procedure	40 CFR 261, Appendix II
Hydrocarbons and Volatile Organics	Gas Chromatography (GC)	Modified Methods Based on "Test Methods for Evaluation of Solid Waste, Physical/Chemical Methods," SW-846, USEPA and ASTM Standards

TABLE II.A.6-3

METHODS USED TO SAMPLE HAZARDOUS WASTES

Hazardous Waste	Reference for Sampling	Sampler	Description of Sampling Method
1. Used Immersion Cleaner (609IC)	Sampling a drum "Samplers and Sampling Procedures for Hazardous Waste Streams," EPA/600/2-80/018	Test Methods for the Evaluation of Solid Waste Physical/ Chemical Methods, SW-846, USEPA	Representative composite sample using drum sampler
2. Used Immersion Cleaner (699IC)	Same as 1	Same as 1	Same as 1
3. Used Mineral Spirits	Sampling a tank "Samplers and Sampling Procedures for Hazardous Waste Streams," EPA/600/2-80/018	Same as 1	For tanks--Bomb sampler (similar to weighted bottle sampler)
4. Mineral Spirits, Tank Bottom Sludge, and Free Water	Same as 3	Same as 3	Same as 3
5. Mineral Spirits Dumpster Mud	Same as 1	Same as 1	Same as 1
6. Dry Cleaning Wastes	Same as 1	Same as 1	Same as 1
7. Paint Wastes	Same as 1	Same as 1	Same as 1
8. Spent Antifreeze	Same as 1 or 3	Same as 1 or 3	Same as 1 or 3

TABLE II.A.6-4

FREQUENCY OF ANALYSIS

Hazardous Waste	Frequency[a]
1. Used Immersion Cleaner 609	Gas chromatograph annually TCLP every five years
2. Used Immersion Cleaner 699	Gas chromatograph annually TCLP every five years
3. Used Mineral Spirits	Gas chromatograph annually Flash point annually TCLP every five years
4. Mineral Spirits, Tank Bottom Sludge, and Free Water	Gas chromatograph annually TCLP every five years
5. Mineral Spirits Dumpster Mud	Gas chromatograph annually TCLP every five years
6. Dry Cleaning Wastes	Gas chromatograph annually TCLP every five years
7. Paint Wastes	Gas chromatograph annually TCLP every five years
8. Spent Antifreeze	Gas chromatograph annually TCLP every five years

[a] In accordance with 40 CFR 264.13(a), Safety-Kleen will also perform physical and chemical analysis of a waste stream when it is notified or has reason to believe that the process or operation generating the waste has changed, or when the result of inspection indicates that the waste to be collected does not match the waste designated.

In addition to the aforementioned analyses, TCLP analyses for all compounds, except pesticides, will be conducted every five years on all characteristic hazardous waste streams (example; used mineral spirits and 699 IC). Any compounds which are positively detected in the waste stream will be added to the parameter list for that waste stream on Table II.A.6-1.

ATTACHMENT II.A.7

MANIFEST SYSTEM, RECORDKEEPING, AND REPORTING

ATTACHMENT II.A.7

MANIFEST SYSTEM, RECORDKEEPING, AND REPORTING

PROCEDURE FOR RECORDKEEPING

Inasmuch as the mineral spirits and immersion cleaner solvents are commercial products leased to the customer, shipments of the clean and used solvents and equipment are handled by invoices.

Quantities of clean solvents received from and used solvents shipped to the recycle center are always manifested as required. Shipments of mineral spirits dumpster mud will also be manifested accordingly. FRS wastes are handled as transfer wastes and will be manifested accordingly (i.e., manifests are not terminated at the service center). The handling of FRS wastes as transfer wastes includes the provision to conduct truck-to-truck transfer of wastes. Required records will be kept at the service center and the recycle center until closure of the facility.

REQUIRED NOTICES

If Safety-Kleen arranges to receive hazardous waste from a foreign source, the Regional Administrator must be notified in writing at least four weeks in advance of the date the waste is expected to arrive at the facility. Notice of subsequent shipments of the same waste from the same foreign source is not required. Safety-Kleen informs its customers in writing (i.e., on each service document) that the facility has the appropriate permit(s) for, and will accept the waste the generator is shipping. Safety-Kleen keeps a copy of this written notice as part of the operating record.

Before transferring ownership or operation of this facility during its operating life, Safety-Kleen will notify the new owner or operator in writing of the requirements of Part 264 and Part 270 of Chapter 40 in the code of Federal Regulations.

MANIFEST SYSTEM

In accordance with 40 CFR 264.71 through 77, Safety-Kleen will ensure that:

1. Customers who are required to provide a manifest do so;

2. The manifests are prepared and signed properly; and

3. Copies are distributed and kept on file, as required.

In addition, discrepancies must be remediated in accordance with 40 CFR 264.72 and unmanifested wastes will be reported as described under 40 CFR 264.76.

An operating log which contains the information required under 40 CFR 264.73 will be maintained and all records and logs will be available at the facility, in accordance with 40 CFR 264.74.

Annual reports will be prepared and submitted by Safety-Kleen, and these records will also be available at the facility for review.

The following information will be maintained in writing in the operation record for the facility:

- A description and quantity of each hazardous waste received;

- The date and storage method for such hazardous waste;

- The location of each hazardous waste stored within the facility;

- Records and results of waste analyses performed;

- Summary reports and details of all incidents that require implementation of the Contingency Plan;

- Monitoring, testing, or analytical data, and corrective action where required by Subpart F and other applicable sections of 264;

- All closure cost estimates under 264.142 and all contingent post-closure cost estimates under 264.144;

- Records of quantities and date of placement for each shipment of hazardous waste placed in land disposal units under an extension to the effective date of any land disposal restriction granted; and

- For any restricted waste generated that can be land disposed without further treatment, and is sent to a land disposal facility, a notice and certification will be set to the treatment, storage, or land disposal facility with the waste. The notice will state that the waste meets the applicable treatment standards set forth in Subpart D of 268 and applicable prohibitions set forth in 268.32 or RCRA Section 3004(d). The notice will include the following information:

  - EPA Hazardous Waste Number; and

  - The corresponding treatment standards and all applicable prohibitions set forth in 268.32 or RCRA Section 3004(d).

Further, the certification will be signed by an authorized representative and will state the following:

"I certify under penalty of law that I personally have examined and am familiar with the waste through analysis and testing or through knowledge of the waste to support this certification that the waste complies with the treatment standards specified in 40 CFR Part 268 Subpart D and all applicable prohibitions set forth in 40 CFR 268.32 or RCRA Section 3004(d). I believe that the information I submitted is true, accurate, and complete. I am aware that there are significant penalties for submitting a false certification, including the possibility of a fine and imprisonment."

Section 264.74 requires that all records, including plans, must be furnished upon request to duly designed representative of the Regional Administrator, and this requirement will be honored. A copy of all records of waste disposal locations and quantities will be submitted to the Regional Administrator and/or FDER upon closure of the facility, if applicable.

A biennial report will be submitted to the Regional Administrator and/or FDER by March 1 during each even numbered year (1990 being the first year) on EPA form 8700-13B. The report will cover facility activities during the previous calendar years and will include:

- The EPA identification number, and address of the facility;
- The calendar year covered by the report;
- The method of treatment, storage, or disposal for each hazardous waste;
- The most recent closure cost estimate under 264.142 and the most recent contingent post-closure cost estimate under 264.144; and

- A certification signed by the owner or operator of the facility or the authorized representative.

LAND BAN NOTIFICATION/CERTIFICATION FORMS

In accordance with 40 CFR 268.7, Safety-Kleen will provide notification/certification for wastes banned from landfills as follows:

1. Printing the Notice language on the manifest such as for core-business customers to branch shipments; or

2. Special forms for each regularly handled waste types (e.g., Mineral spirits, immersion cleaner, and perchloroethylene); or

3. A general form that must be completed for unique or non-standard waste streams.

The Notice is required paperwork for the streams handled by Safety-Kleen. Shipments lacking the proper Notice will not be accepted by any Safety-Kleen facility. When a shipment with the proper Notice is received, the Notice is kept in the files of the receiving facility with the manifest or with the pre-print if a manifest is not used.

PART II B

CONTAINERS

ATTACHMENT II.B.1

CONTAINMENT SYSTEM

ATTACHMENT II.B.1
CONTAINMENT SYSTEM

CONTAINMENT

The indoor drum storage area shown in Figure II.B.1-1, will occupy a portion of the building area which will have a sloped concrete floor and a collection trench to form a spill containment system. The capacity of the containment system is designed to be greater than ten percent of the total liquid storage capacity.

The containment area will be free of cracks and will be coated with a concrete sealant, which is resistant to the materials handled in the container storage area. The exact sealant to be used is currently under selection.

The containment volume will be composed of the sloped concrete floor and the collection trench. As illustrated in Figure II.B.1-2, the total containment volume will be 2,940 gallons. Therefore, the maximum storage capacity will be 29,400 gallons. The types and number of each container may vary; however, the total volume of product and waste stored will never exceed the maximum volume of 29,400 gallons. The amount of waste that will be permitted to be in the container storage area at any time is 6,912 gallons. This amount will be comprised of both permitted and transfer wastes. The exact dimensions of the containment area, once constructed, may vary slightly. However, the total storage capacity will be adjusted accordingly.

Spills will be removed by a hand-held, portable electric pump (the COMS pump), wet/dry vacuum cleaner, or sorbent material. Product collected in the collection trench will be pumped into a safe drum for transport to the recycle facility for reclamation. Only in the event that the spill were to exceed the containment capacity would spilled wastes be able to extend beyond the containment area. Only six openings (doorways) will exist in the drum containment area. Four of these will lead to other containment areas; the drum fill/return and the enclosed concrete dock (Figure II.B.1-1). The other

II.B.1-1
Container Storage Location
Safety-Kleen Corp. Facility
Medley, Florida

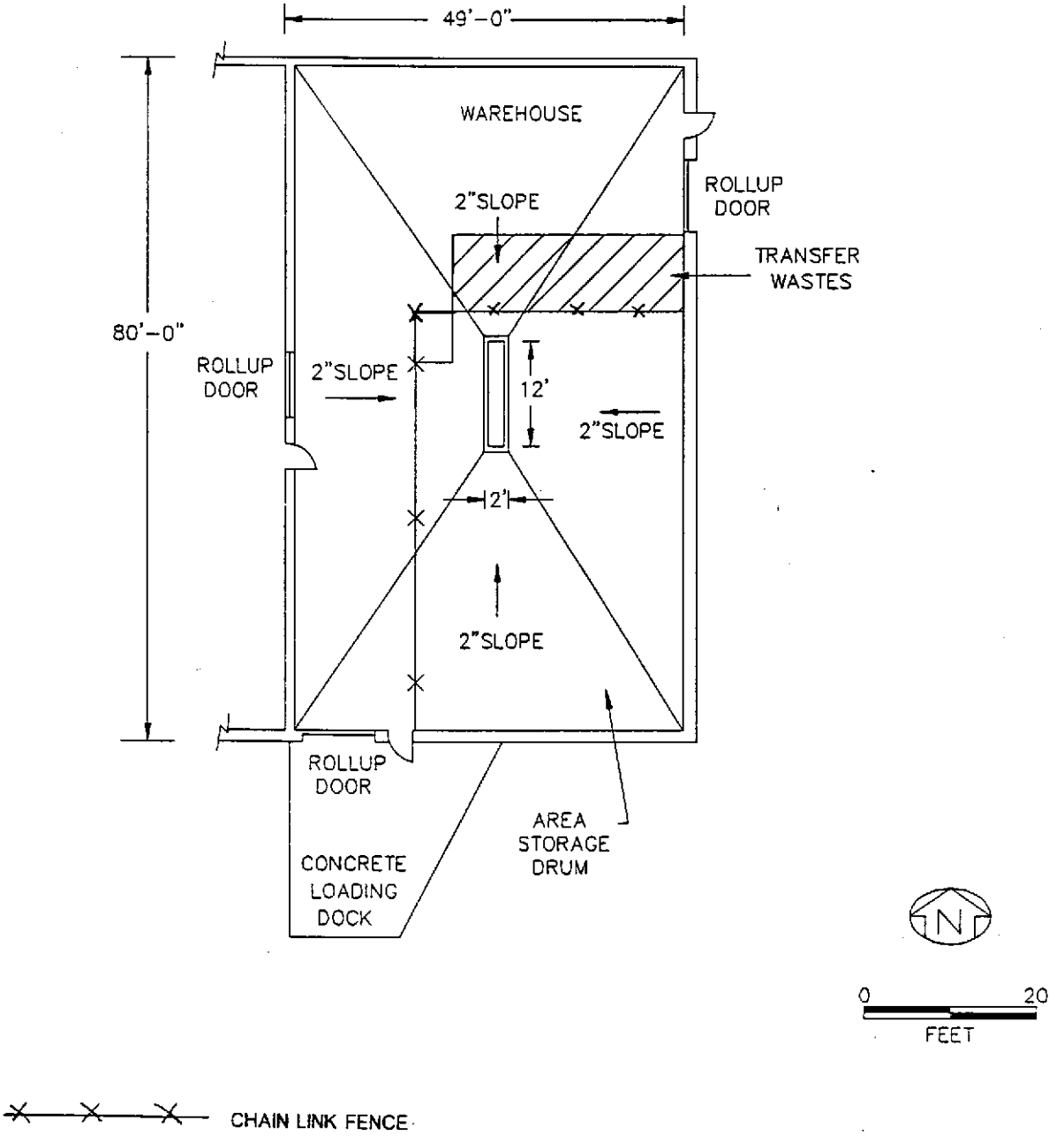

ERM-South, Inc.
Environmental Resources Management

FIGURE II.B.1-2

Project: SE Medley — W.O. No. 13112.21 — Sheet 1 of 1
Subject: Containment Volume Calculations — By: MCB — Date: 6/14/91
Chkd by: VEH — Date: 1/28/92

DRUM STORAGE WAREHOUSE:

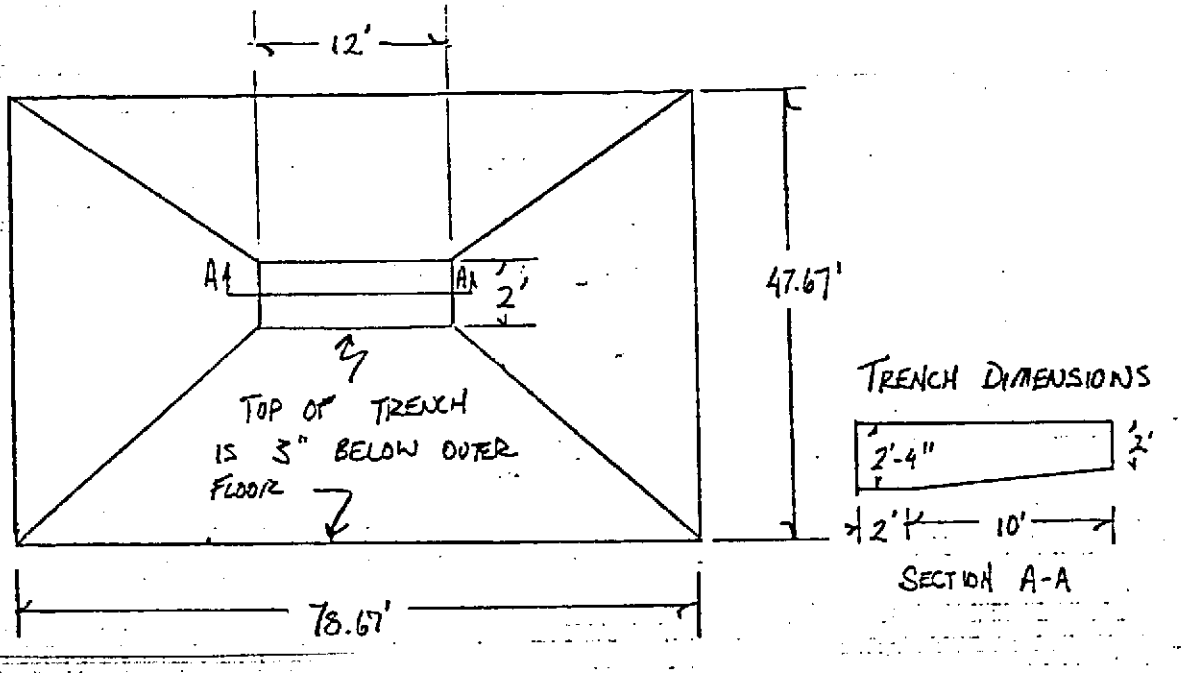

NOTE: FLOOR PLAN DIMENSIONS WERE TAKEN FROM THE SANFORD SERVICE CENTER BUILDING PLAN. DIMENSIONS ARE FROM THE INTERIOR OF THE ROOM.

ASSUMPTIONS: ASSUME FLOOR CONFIGURATION IS SIMILAR TO THE FRUSTRUM OF A PYRAMID, AND APPLY THE VOLUME FORMULA FOR A FRUSTRUM.

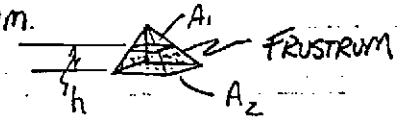

FLOOR VOLUME:

$$V = \frac{h}{3}\left(A_1 + A_2 + \sqrt{A_1 A_2}\right);$$ WHERE $h = 3''$ OR $0.25'$

$A_1 = 2' \times 12' = 24\ ft^2$

$A_2 = 78.67' \times 47.67' = 3{,}750\ ft^2$

$$V = \frac{0.25}{3}\left(24 + 3{,}750 + \sqrt{(24)(3{,}750)}\right)$$

$$V = 340\ ft^3 \left(\frac{7.48\ gal}{ft^3}\right) = 2{,}543 \text{ GALLONS}$$

TRENCH VOLUME:

$$(2 \times 2 \times 2.33) + ((2.33 + 2)\tfrac{1}{2} \times 10 \times 2) = 53\ ft^3 = 396 \text{ GALLONS}$$

TOTAL VOLUME: $340\ ft^3 + 53\ ft^3 = 393\ ft^3 = 2{,}940$ GALLONS

two doorways will be located on the west side of the drum containment area behind a locked chain link fence. All openings will be normally closed and locked. Due to the volume of containment available and the configuration of the drum containment area, it is highly unlikely that any spill would extend beyond this area.

Since the characteristics of the stored wastes will be known, analyses will not be performed on the materials collected from the containment area. All collected materials will be sent to a recycle facility for recycling/reclamation. Recovered materials that cannot be effectively reclaimed at the recycle facility will be, in turn, sent to a permitted facility for disposal.

CONTAINER MOVEMENT

In the drum storage area, drums will be handled with a hand-truck or forklift that is free of sharp points and stacked by hand. Every time a drum is moved, a chance exists that it will be tipped over, dropped, or punctured. To minimize the possibility of spillage, drums will be tightly covered and kept in an upright position. A small portable electric pump will be available to quickly transfer the liquid from any leaking container into another safe container. Some route trucks are equipped with an electric hoist. This hoist will be used in the loading/unloading operation to minimize chances for spillage and/or employee injury. Trucks used for shipping containers between the recycle center and service center will have lift gates for container loading/unloading. With the exception of mineral spirits, all containerized wastes will be loaded/unloaded from local area vans/trucks in the vicinity of the garage door on the northeast side of the building. Containers going to/from the recycle center are loaded/unloaded at the dock area on the south side of the building. The mineral spirits will be loaded/unloaded at the fill/return shelter, which is described in the Tank Section, Part II.C.

In the warehouse area, the immersion cleaner, mineral spirits dumpster mud drums, dry cleaning waste, paint waste, and FRS (transfer wastes) drums will be moved with two-

wheel hand trucks and stacked by hand. All containers will be elevated on pallets to eliminate the possibility of them standing in spilled solvent.

Containers will be double-stacked. The containers will be arranged so that a two-foot aisle space exists between all rows of pallets such that all containers can be readily visible for inspection and handling. The FRS wastes (transfer wastes) will be placed in a separate and distinct area as shown on Figure II.B.1-1. No other wastes will be stored in this area. Since all materials handled by Safety-Kleen are compatible with one another, no specific areas will be designated for specific wastes. Wastes will be grouped by type; however, since the actual volume present of any product at a given time varies greatly, it is not practical to assign specific locations to given wastes.

ATTACHMENT II.B.2

WASTE COMPATIBILITY

ATTACHMENT II.B.2
WASTE COMPATIBILITY

The solvents to be stored at this facility are compatible with each other and with other materials to be handled at this facility with respect to reactivity and therefore do not require special segregation procedures. However, the wastes are the primary source of feed stock for regenerating the clean solvents. For ease of inventory control and product integrity, separation and grouping of both used and unused solvents will be a standard practice at the Service Center.

All material at the facility will be managed in accordance with local fire protection code and fire department requirements.

ATTACHMENT II.B.3

WASTE SEGREGATION

ATTACHMENT II.B.3
WASTE SEGREGATION

PROCEDURE FOR SEGREGATING WASTE TYPES

The used solvents are compatible with each other and with other materials to be handled at this facility, with respect to reactivity, and therefore do not require special segregation procedures. However, they are the primary source of feed stock for regenerating the clean solvents. For ease of inventory control and product integrity, separation and grouping of both used and fresh solvents will be a standard practice at the facility.

All materials will be managed in accordance with the local fire protection code and fire department requirements.

The immersion cleaner is always contained in partially filled, covered containers before, during, and after its use. Until received at the recycle facility, the immersion cleaner is never transferred to another container. The containers containing the used immersion cleaner will be returned to the facility and stored in the designated container storage areas before shipment to the recycle center.

The dry cleaning wastes are contained in containers. All containers are DOT-approved. These containers will be managed similar to the used immersion cleaner containers and contents within the containers will not be removed or processed at the facility.

The mineral spirits are collected in containers. These containers are then emptied into the dumpsters in the return/fill shelter.

Paint wastes consist of various lacquer thinners and paints. The waste is collected in containers at the customer's place of business and the containers will then be palletized and stored in the container storage area of the warehouse.

FRS wastes received at the facility are classified as characteristic wastes (D-waste codes), non-specific source wastes (F-waste codes), listed wastes from specific sources (K-wastes), commercial chemical products, manufacturing intermediates or off-specification chemical commercial products (U-waste codes). Most of the time, a waste stream will be some combination of specific components, and be categorized as a D- or F- waste. Table II.A.5-1 provides a list of the EPA waste codes managed at the facility as transfer wastes under the FRS program. The FRS wastes will be clearly delineated from the permitted wastes. An area for the temporary storage of FRS wastes will be marked off using a chain and/or stantions. No other wastes will be placed in the designated transfer areas. See Figure II.B.1-1.

The containers are designed and constructed to be compatible with the stored material and to minimize the possibility of breakage and leaking, in accordance with DOT shipping container specifications. Tables II.B.3-1 through II.B.3-7 provide typical construction specifications of the containers.

Wastes will be stored in polyethylene and steel containers. Since none of the waste handled by Safety-Kleen reacts with metal or polyethylene, compatibility is assured. Immersion cleaner and dry cleaning waste containers will never be opened at the branch, and none of the wastes are incompatible.

POTENTIAL FIRE SOURCES

The following is a list of fire prevention and minimization measures:

1. All wastes and products will be kept away from ignition sources--Personnel must confine smoking and open flames to remote areas (e.g., the office or locker room), separate from any solvent. The mineral spirits handling area and the aboveground storage tanks will be separate from the warehouse building area to minimize the potential for a fire to spread or injury to personnel to occur.

TABLE II.B.3-1

SAFETY-KLEEN CORP.
SPECIFICATIONS FOR STORAGE CONTAINERS

MINERAL SPIRITS AND DUMPSTER MUD

1. 30 gallons, 18-1/4" diameter x 28-1/4" outside height x 20/18 gauge steel, tapered, 2 rolling hoops, painted outside.

   Cover for 30-gallon drums:

   18-1/4" diameter x 20 gauge steel cover and exterior painted.

   18-1/4" diameter x 20 gauge steel cover, exterior painted, 2" Tri-Sure ring near edge.

   Lock ring for 30-gallon drums:

   18-1/4" x 16 gauge galvanized lock ring.

2. 16 gallons, 14" diameter x 26-9/16" outside height x 20/19 gauge steel, tapered, 2 rolling hoops, painted outside.

   Cover for 16-gallon steel drum:

   14" diameter x 22 gauge steel cover painted and fitted with a tubular gasket.

   Lock ring for 16-gallon steel drum:

   14" diameter x 18 gauge galvanized steel lock ring.

3. 5-gallon polyethylene.

TABLE II.B.3-2

SAFETY-KLEEN CORP.
SPECIFICATIONS FOR STORAGE CONTAINERS

DRY CLEANER WASTE

1. 15 gallons ("split 30"), 18-1/4" diameter x 16-5/8" outside height x 20/18 gauge steel, tapered, 1 rolling hoop, painted outside and epoxy phenolic lined.

   Cover for 30-gallon drums:

   18-1/4" diameter x 20 gauge steel cover, exterior painted and epoxy phenolic lined inside.

   Lock ring for 30-gallon drums:

   18-1/4" x 16 gauge galvanized lock ring.

2. 30 gallons, 18-1/4" diameter x 30-1/2" outside height x 20/18 gauge steel, tapered, 2 rolling hoops, painted outside and epoxy phenolic lined inside.

   Cover for 30-gallon drums:

   18-1/4" diameter x 20 gauge steel cover, exterior painted and epoxy phenolic lined inside.

   Lock ring for 30-gallon drums:

   18-1/4" x 16 gauge galvanized lock ring.

TABLE II.B.3-2 (Continued)

3. 16 gallons, 14.8" diameter x 26.8" outside height x 1/4" high density polyethylene.

   Cover for polyethylene drum:

   14" diameter x 1/4" high density polyethylene.

   Lock ring for polyethylene drum:

   15/62" diameter x 2.62" x 16 gauge steel closing ring with drawlatch, coated with epoxy paint.

4. 16 gallons, 14" diameter x 26-9/16" outside height x 20/19 gauge steel, tapered, 2 rolling hoops, painted outside and epoxy phenolic lined.

   Cover for 16-gallon steel drum:

   14" diameter x 20 gauge steel cover painted and fitted with a tubular gasket.

   Lock ring for 16-gallon steel drum:

   14" diameter x 18 gauge galvanized steel lock ring.

5. 5-gallon 11" diameter x 13-19/32" high x 24 gauge steel tighthead pail, with handle and 2" flange and plug, built to DOT Specification 17E, painted exterior and rust inhibited interior.

TABLE II.B.3-3

SAFETY-KLEEN CORP.
SPECIFICATIONS FOR STORAGE CONTAINERS

IMMERSION CLEANER WASTE

1. 16 gallons, 14" diameter x 26-9/16" outside height x 18 gauge steel, 2 rolling hoops, exterior painted, fitted with 4 brackets, built to DOT Specification 5B.

   Cover for 16-gallon steel drum:
   14" diameter x 18 gauge steel cover, painted and fitted with a tubular gasket.

   Lock ring for 16-gallon steel drum:
   14" diameter x 18 gauge galvanized steel lock ring or 14" diameter x 12 gauge steel DOT 5B closing ring with nut and bolt installed.

TABLE II.B.3-4

SAFETY-KLEEN CORP.
SPECIFICATIONS FOR STORAGE CONTAINERS

PAINT AND WASTE STORAGE CONTAINERS

1. 5-gallon 11" diameter x 13-19/32" high x 24 gauge steel tighthead pail, with handle and 2" flange and plug, built to DOT Specification 17E, painted exterior and rust inhibited interior.

2. 16 gallons, 14-7/8" diameter x 26-7/8" high x 19 gauge steel closed head drum with 2" bung and 3/4" bung built to DOT Specification 17E, painted exterior.

TABLE II.B.3-5

SAFETY-KLEEN CORP.
SPECIFICATIONS FOR STORAGE CONTAINERS

ETHYLENE GLYCOL

1. 30 gallons, 18-1/4" diameter x 28-1/4" outside height x 20/18 gauge steel, tapered, 2 rolling hoops, painted outside.

   Cover for 30-gallon drums:

   18-1/4" diameter x 20 gauge steel cover, exterior painted and epoxy phenolic lined inside.

   Lock ring for 30-gallon drums:

   18-1/4" x 16 gauge galvanized lock ring.

2. 55 gallon, 22-1/2" x 32-7/8" outside height x 18/18/16 gauge steel, 3/4" and 2" Tri-Sure rings in cover, painted outside, built to DOT-17H specifications.

   Lock ring for 55 gallon drums:

   22-1/2" x 12 gauge steel, DOT-17H lock ring.

TABLE II.B.3-6

SAFETY-KLEEN CORP.
SPECIFICATIONS FOR STORAGE CONTAINERS

FLUID RECOVERY SERVICE WASTES

1. 30 gallons, 18-1/4" diameter x 30-1/2" outside height x 20/18 gauge steel, tapered, 2 rolling hoops, painted outside and epoxy phenolic lined inside.

   Cover for 30-gallon drums:

   18-1/4" diameter x 20 gauge steel cover, exterior painted and epoxy phenolic lined inside.

   Lock ring for 30-gallon drums:

   18-1/4" x 16 gauge galvanized lock ring.

2. 55 gallons, 22-1/2" x 32-7/8" outside height x 18/18/16 gauge steel, 3/4" and 2" Tri-Sure rings in cover, painted outside, built to DOT-17H specifications.

   Lock ring for 55-gallon drums:

   22-1/2" x 12 gauge steel lock ring, built to DOT-17H specifications.

3. 55-gallon polyethylene, built to DOT specifications.

TABLE II.B.3-7

SAFETY-KLEEN CORP.
SPECIFICATIONS FOR STORAGE CONTAINERS

OVERPACK DRUM

1. 85 gallons, 25-7/8" diameter x 38" height (interior dimensions) x 16 gauge steel, 2 rolling hoops, painted exterior and epoxy phenolic coated interior, built to DOT Salvage Drum specifications.

   Cover for 85-gallon drum:
   27-7/8" diameter x 16 gauge steel cover, painted and fitted with a gasket and a 3/4" fitting with a nylon plug.

   Lock ring for 85-gallon drum:
   27-7/8" x 16 gauge/12 gauge closing ring with nut and bolt installed.

2. Ignitable wastes will be handled so that they do not:

   a. become subject to extreme heat or pressure, fire or explosion, or a violent reaction--The mineral spirits waste will be stored in a tank or in containers, none of which will be near sources of extreme heat, fire, potential explosion sources, or subject to violent reactions. The tanks will be vented and the containers kept at room temperature to minimize the potential for pressure build-up.

   b. produce uncontrolled toxic mists, fumes, dusts or gases in quantities sufficient to threaten human health--The vapor pressure of mineral spirits is low (2 mm mercury). Mineral spirits and the paint waste may react with strong oxidizers. Toxic mists, fumes, dusts, or gases will not form in quantities sufficient to threaten human health since strong oxidizers will not be handled at this facility and the solvent vaporization will be minimal under normal working conditions.

   c. produce uncontrolled fires or gases in quantities sufficient to pose a risk of fire or explosion--See "a" above and "d" below.

   d. damage the structural integrity of the Safety-Kleen facility--The solvents stored at this facility will not cause deterioration of the tank, containers, or other structural components of the facility.

3. Adequate aisle space will be maintained to allow the unobstructed movement of personnel, fire protection equipment, and decontamination equipment to any area of the facility operation in an emergency.

4. "NO SMOKING" signs will be posted in areas where solvents are handled or stored.

5. Fire extinguishers must be checked once per week and tested by the fire extinguisher company once per year.

EXTERNAL FACTORS

The design of the installation will be such that a harmful spill is highly unlikely to occur from most external factors. The storage tanks will be inaccessible to non-Safety-Kleen personnel and the pump switches will be located inside. Also, the container storage area will be in a building which will be inaccessible to unauthorized personnel.

1. Vandalism--Only extreme vandalism would result in a solvent spill or fire. Responses to spills and fires are described in the contingency plan.

2. Strikes--A strike would not result in a solvent spill or fire.

3. Power failure--A power failure would not result in a spill or fire. Should a power failure occur, all activities requiring electricity will cease.

4. Flooding--The site elevation is above the projected 100-year floodplain.

5. Storms or Cold Weather--The solvent return and fill station will be roofed to eliminate the possibility of rain or snow entering the dumpsters. No opportunity is foreseen to affect the facility with snow, cold weather, or stormwater.

ATTACHMENT II.B.4

CONTAINER MANAGEMENT

ATTACHMENT II.B.4
CONTAINER MANAGEMENT

The immersion cleaner is always contained in partially filled, covered containers before, during, and after its use. Until received at the recycle facility, the immersion cleaner is never transferred to another container. The containers containing the used immersion cleaner will be returned to the facility and stored in the designated container storage areas before shipment to the recycle facility.

The dry cleaning wastes are contained in containers. These containers will be managed similarly to the used immersion cleaner containers, and contents within the containers will not be removed or processed at the facility.

The mineral spirits are collected in containers. The containers are designed and constructed to be compatible with the stored material and to minimize the possibility of breakage and leaking, in accordance with DOT shipping container specifications. Tables II.B.3-1 through II.B.3-7 describe typical construction specifications of the containers.

Paint wastes consist of various lacquer thinners and paints. The waste is collected in containers at the customer's place of business and the containers will be palletized and stored in the container storage area of the warehouse.

FRS wastes received at the facility are classified as characteristic wastes (D-waste codes), non-specific source wastes (F-waste codes), listed wastes from specific sources (K-wastes), commercial chemical products, manufacturing intermediates or off-specification chemical commercial products (U-waste codes). Most of the time, a waste stream will be some combination of specific components, and be categorized as a D- or F- waste. Table II.A.5-1 provides a list of the EPA waste codes managed at the facility under the FRS program. The FRS wastes will be managed as transfer waste. The manifest will

not be terminated at the service center. The management of FRS wastes as transfer wastes includes the provision to conduct truck-to-truck transfer of the FRS wastes. Truck-to-truck transfers are accomplished within two hours. An area for the temporary storage of the FRS wastes will be delineated by a chain and/or stantions. The FRS wastes will be clearly indicated as being transfer wastes.

Wastes will be stored in polyethylene and steel containers. Since none of the wastes handled by Safety-Kleen react with metal or polyethylene, compatibility is assured. Immersion cleaner and dry cleaning waste containers will never be opened at the branch, and none of the wastes are incompatible. Table II.B.4-1 provides a listing of waste streams and container sizes.

TABLE II.B.4-1

SAFETY-KLEEN CORP.
WASTE STREAMS AND CONTAINER SIZES

Waste Stream	Container Sizes (gallons)	Construction Material of Container
Mineral Spirits	5	Polyethylene
	16	Steel
	30	Steel
Dry Cleaner	5	Steel
	16	Steel or Polyethylene
	30	Steel or Polyethylene
	Split 30 (also known as 15- or 20-gallon)	Steel
Immersion Cleaner	16	Steel
Paint Waste	5	Steel
	16	Steel
Ethylene Glycol	30	Steel
	55	Steel
Dumpster Mud/Tank Bottoms	16	Steel
	30	Steel
Fluid Recovery Service Wastes	30	Steel or Polyethylene
	55	Steel or Polyethylene

An 85-gallon overpack drum may be used with any of the waste streams.

ATTACHMENT II.B.5

CONTAINER INSPECTION

ATTACHMENT II.B.5
CONTAINER INSPECTION

The purpose of the inspection plan is to establish a procedure and schedule for the systematic monitoring and inspection of hazardous waste management and other material management facilities to ensure proper operation and maintain compliance.

The Branch Manager or his designate will be responsible for carrying out the inspections of all hazardous waste management facilities in accordance with the following procedure and schedule.

The Branch Manager or his designate, using the inspection log (Figure II.B.5-1 or similar form), will inspect the facility daily for security (gates and locks) and any evidence of sticking, corrosion, or uncommon activity. The facility fence will be checked weekly for deterioration, gaps under the fence, and broken wire ties. The Weekly Inspection log is shown in Figure II.B.5-2.

Figure II.B.5-3 presents the Daily Inspection log for the Drum Storage Area. Daily inspections of containers will consist of the following:

- Physically examine the container (drum) storage area to verify that no leaks have occurred since the last inspection.
- Verify that no drums have been damaged or rusted to the point of near leakage.
- Replace or adjust damaged, missing, or loose fasteners.
- Examine and verify that all container identification, dates, loading data, and hazardous waste labels are attached and current.

FIGURE II.B.5-1

INSPECTION LOG SHEET FOR DAILY INSPECTION OF GATES AND LOCKS

Check all gates and locks for security, sticking, corrosion, lack of warning signs, or uncommon activity.

Name	Date	Time	Status

Figure II.B.5-2

INSPECTION LOG SHEET FOR: Weekly Inspection of SAFETY AND EMERGENCY EQUIPMENT, SECURITY DEVICES AND MISCELLANEOUS EQUIPMENT

INSPECTOR'S NAME/TITLE: _____

INSPECTOR'S SIGNATURE: _____

DATE OF INSPECTION (Month/Day/Year): _____

TIME OF INSPECTION: _____

SAFETY AND EMERGENCY EQUIPMENT

Fire Extinguishers: A* N

If 'N', circle appropriate problem: overdue inspection, inadequately charged, inaccessible, other: _____

Eyewash and Shower: A N

If 'N', circle appropriate problem: disconnected malfunctioning valves, inadequate pressure, inaccessible, malfunctioning drain leaking, other: _____

First Aid Kit: A N

If 'N', circle appropriate problem: inadequate inventory, other: _____

Spill Cleanup Equipment: A N

If 'N', circle appropriate problem: inadequate supply of sorbent, towels and/or clay, inadequate supply of shovels, mops, empty drums, wet/dry vacuum, other: _____

Personal Protection Equipment: A N

If 'N', circle appropriate problem: inadequate supply of aprons, gloves, glasses, respirator, other: _____

SECURITY DEVICES:

Gates and Locks: A N

If 'N', circle appropriate problem: sticking, corrosion, lack of warning signs, fit, other: _____

Fence: A N

If 'N', circle appropriate problem: broken ties, corrosion, holes, distortion, other: _____

MISCELLANEOUS EQUIPMENT:

Dry Dumpster: A N

If 'N', circle appropriate problem: rust, corrosion, split seams, distortion, deterioration, excess debris, liquids in unit, other: _____

OBSERVATIONS, COMMENTS, DATE AND NATURE OF ANY REPAIRS: _____

_____

_____

_____

_____

_____

*A = ACCEPTABLE

Figure II.B.5-3

INSPECTION LOG SHEET FOR: Daily Inspection of DRUM STORAGE AREA - A log must be completed for each storage area.

DESCRIPTION OF AREA (e.g., metal shelter, northeast corner of warehouse, etc.): _____

_____

PERMITTED STORAGE VOLUME: _____

INSPECTOR'S NAME/TITLE: _____

INSPECTOR'S SIGNATURE: _____

	MON	TUES	WED	THURS	FRI
DATE: (M/D/Y)	___	___	___	___	___
TIME:	___	___	___	___	___
CONTAINERS:					
Number/Volume* of M.S. Waste Drums:					
Number/Volume of Dumpster/Tank Bottom Drums					
Number/Volume of I.C. Waste Drums:					
Number/Volume of Dry Cleaning Waste Drums:					
Number/Volume of Paint Waste Drums:					
Number/Volume of Paint Waste Pails:					
Number/Volume of Spent Antifreeze:					
Number/Volume of Transfer Wastes:					
TOTAL VOLUME (IN GALLONS):					
	A**N	A N	A N	A N	A N

If 'N', circle appropriate problem: Total volume exceeds the amount for which the facility is permitted, other: _____

Condition of Drums	A N	A N	A N	A N	A N

If 'N', circle appropriate problem: missing or loose lids, missing, incorrect or incomplete labels, rust, leaks, distortion, other:

_____

Stacking/Placement/Aisle Space	A N	A N	A N	A N	A N

If 'N', circle appropriate problem: different from Part B Floor Plan, containers not on pallets, unstable stacks, other: _____

CONTAINMENT:

Curbing, Floor and Sump(s)	A N	A N	A N	A N	A N

If 'N', circle appropriate problem: ponding/wet spots, deterioration (cracks, gaps, etc.), displacement, leaks, other: _____

Loading/Unloading Area	A N	A N	A N	A N	A N

If 'N', circle appropriate problem: cracks, deterioration, ponding/wet spots, other: _____

OBSERVATIONS, COMMENTS, DATE AND NATURE OF ANY REPAIRS: _____

_____

_____

* To calculate total volumes, use the following: M.S., I.C., D.C. and paint waste drums hold 15 gallons.
A = ACCEPTABLE
N = NOT ACCEPTABLE

Daily inspection of containment will consist of the following:

- Containment areas are inspected to detect signs of deterioration and failure of the containment system such as cracks, breakage, settling, and spillage.

- Inspection of container placement and stacking such as aisle space, height, and stability of stacks.

- Daily inspection of solvent return receptacle (wet dumpster) consists of the inspection for leaks and excess dumpster mud build-up.

ATTACHMENT II.B.6

CONTAINER CLOSURE PLAN

ATTACHMENT II.B.6
CONTAINER CLOSURE PLAN

The Safety-Kleen Corp. has constructed each service center with the intent that each will be a long-term facility for the distribution of Safety-Kleen products. Based on current business and projected facility conditions, this facility is expected to remain in operation until the year of 2025.

In the event that some presently unforeseen circumstance(s) results in the discontinuance of operations and permanent closure or sale of the facility, the following closure plan is designed to identify the steps necessary to completely close the facility at any point during its intended life, and should be used for tanks, container storage area, and equipment.

It is intended that all closures will be complete and final with removal of waste and decontamination of the facility and associated equipment, in order to eliminate the need for maintenance after closure and the possibility of escape of hazardous waste constituents into the environment.

Procedures described in this closure plan are also applicable to cleaning up of spills and repairing/decontamination of the facility or equipment.

An anticipated closure schedule is presented in Figure II.B.6-1. At the present time, a closure permit is required to closed the facility. An anticipated maximum waste inventory for the container storage portion of the facility is presented in the following section.

Figure II.B.6-1
Typical Closure Schedule
Safety-Kleen Corp. Facility
Medley, Florida

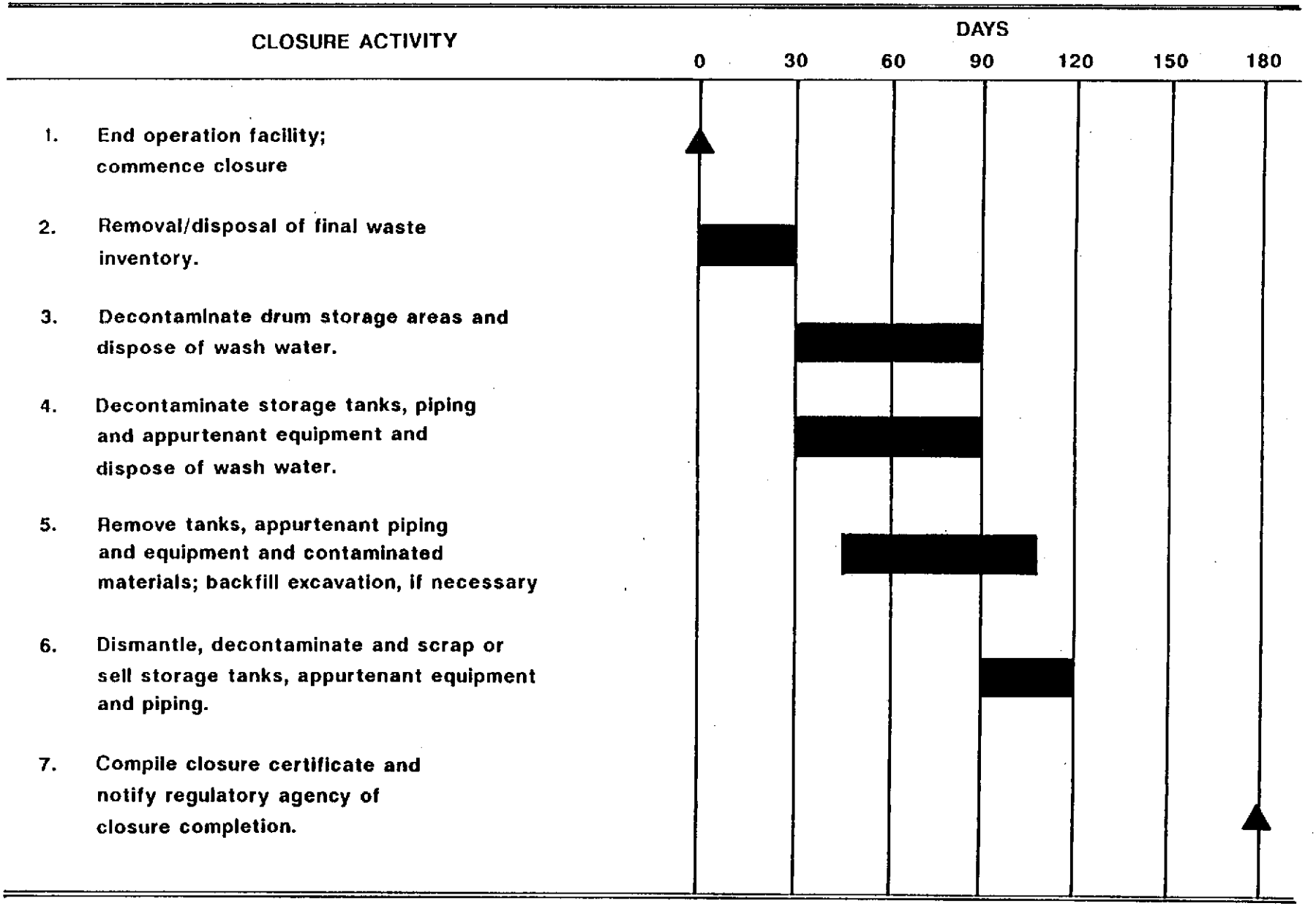

FACILITY DATA

Container Storage Areas

The container storage area will have a 49' x 80' (outer dimension) area with a sloped floor and collection sump. The maximum volume of product and waste stored will be 29,400 gallons, with 6,912 gallons anticipated to be containers of waste dry cleaner, spent immersion cleaner, mineral spirits dumpster mud, FRS wastes, spent antifreeze, and/or paint waste.

Maximum Inventory of Wastes

Containerized Waste: Anticipated maximum of 6,912 gallons of waste.
This amount includes any combination of five-gallon containers, 15-gallon containers (also known as split 30- or 20-gallon), 16-gallon containers, 30-gallon containers, and/or 55-gallon containers.

CLOSURE PROCEDURE

Container Storage Areas

- The container storage area will house containers of used immersion cleaner, mineral spirits dumpster mud, dry cleaning wastes, paint wastes, FRS wastes, and spent antifreeze.

- At closure, all containers will be removed and transported to the recycle center, with proper packaging, labeling, and manifesting; the contents in the containers will be reclaimed and the containers will be cleaned for reuse.

- The concrete floor and spill containment areas will be cleaned with detergent solution and the rinsate will be analyzed for mineral spirits, volatile organic compounds, lead, and cadmium using SW-846 methods to determine the effectiveness of decontamination. The area will continue to be washed and rinsed until levels are below maximum contaminant levels (MCLs), or if MCLs are not available, practical quantitation limits (PQLs) as specified in Appendix IX of 40 CFR 264.

- If the wash water or other wastes generated in the closure process are determined to be hazardous, they will be properly disposed of as a hazardous waste; otherwise the material will be disposed of as an industrial waste. It should be noted that wash water and rinsate will not be allowed to drain to any waterway. It is anticipated that approximately 350 gallons of rinsate will require RCRA disposal.

- The equipment used to clean this area includes mops, pails, scrub brushes, a wet/dry vacuum, and containers. The mops, pails, and scrub brushes will be containerized and disposed of as hazardous waste. The wet/dry vacuum and hose will be washed with a detergent solution to decontaminate it. The containers will be used to store the wastewater.

FACILITY CLOSURE SCHEDULE AND CERTIFICATION

- Safety-Kleen may amend the closure plan at any time during the active life of the facility. (The active life of the facility is that period during which wastes are periodically received.) Safety-Kleen shall amend the plan any time changes in operating plans or facility design affect the closure plan or whenever there is a change in the expected year of closure of the facility. The plan must be amended within 60 days of the changes.

- Safety-Kleen shall notify the state authority at least 180 days prior to the date closure is expected to begin, except in cases where the facility's permit is terminated or if the facility is otherwise ordered by judicial decree or compliance order to cease receiving wastes or to close. The date when Safety-Kleen "expects to begin closure" should be within 90 days after the date on which Safety-Kleen expects to receive the final volume of wastes.

- Within 90 days of receiving the final volume of hazardous wastes, or 90 days after approval of the closure plan, if that is later, Safety-Kleen shall remove from the site all hazardous wastes in accordance with the approved closure plan. The Regional

Administrator (or FDER Secretary) may approve a longer period if Safety-Kleen demonstrates that:

The activities required to comply with this paragraph will, of necessity, take longer than 90 days to complete; or

The following requirements are met:

- The facility has the capacity to receive additional wastes;
- There is a reasonable likelihood that a person other than Safety-Kleen will recommence operation of the site;
- Closure of the facility would be incompatible with continued operation of the site; and Safety-Kleen has taken and will continue to take all steps to prevent threats to human health and the environment.

- Safety-Kleen shall complete closure activities in accordance with the approved closure plan and FDER permit, and within 180 days after receiving the final volume of wastes or 180 days after approval of the closure plan, whichever is later or an additional period, if required and approved by FDER and EPA.

- When closure is completed, all facility equipment and structures shall have been properly disposed of, or decontaminated by removing all hazardous waste and residues.

- When closure is completed, Safety-Kleen shall submit to the agency a certification by an independent registered professional engineer that the facility has been closed in accordance with the specifications in the approved closure plan.

PART II C

TANK SYSTEMS

ATTACHMENT II.C.1

ENGINEERING ASSESSMENT OF TANK SYSTEM

ATTACHMENT II.C.1
ENGINEERING ASSESSMENT OF TANK SYSTEM

Upon completion of the tank system construction, an engineering assessment of the tank system will be prepared. This assessment will include an evaluation of the structural integrity and suitability of the tank system for handling hazardous waste as required under 40 CFR 264.191 and 264.192.

This assessment will also include a diagram of the piping, instrumentation, and process flow for each tank system and a description of the materials and equipment used to provide external corrosion protection as required under 40 CFR 264.192(a)(3)(ii). Containment capacity will also be confirmed. A pre-construction tank assessment for the spent ethylene glycol tank is provided in Attachment II.C.6.

ATTACHMENT II.C.2

TANK SYSTEM SPECIFICATIONS

ATTACHMENT II.C.2
TANK SYSTEM SPECIFICATIONS

The facility includes six aboveground steel tanks (Figure II.C.2-1). Used mineral spirits contained in containers returned from the customers will be transferred via the wet dumpster into a 20,000-gallon tank, awaiting bulk shipment to the recycle center. The other five tanks consist of one 20,000-gallon mineral spirits product tank, two 20,000-gallon nonhazardous waste oil tanks, one 20,000-gallon dry cleaning product tank, and one 20,000-gallon spent ethylene glycol tank. The two product and two waste oil tanks are not considered RCRA tanks.

MATERIAL COMPATIBILITY

Mineral spirits (petroleum naphtha) and ethylene glycol are compatible with the mild steel tank structure; in fact, mineral spirits are often used as a light hydrocarbon coating to prevent rusting of metal parts. As with all petroleum storage vessels, water will accumulate over time due to condensation. The mineral spirits have a specific gravity less than water and the water will accumulate in the bottom of the tank. Ethylene glycol and water are soluble in all proportions and no separate water plume will form in this tank. There is the potential for corrosion of the tank at the product/water interface.

TANK DESIGN AND OPERATION PROCEDURES

Spent mineral spirits from parts washers will be accumulated in the 20,000-gallon aboveground storage tank by transfer through the return and fill station. Containers of spent solvent will be poured into the dumpsters (barrel washers) in the return and fill station, and material in the dumpster will be pumped into the storage tank for spent solvent. The return and fill station will have secondary containment.

Figure II.C.2-1
Tank Farm
Safety-Kleen Corp. Facility
Medley, Florida

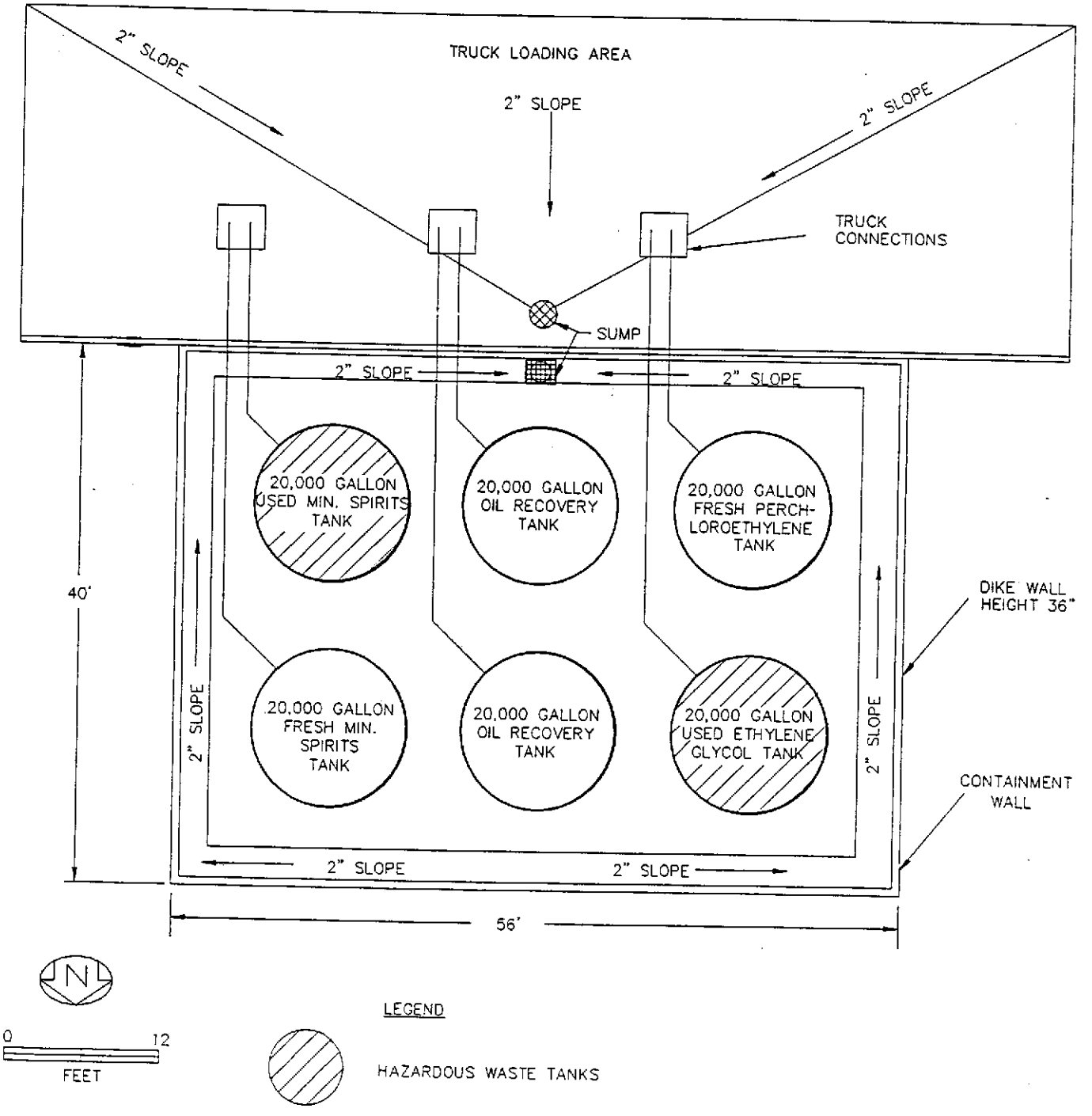

NOTE: ENTIRE AREA IS CONCRETE

13112.22/31122TF/062591

The ERM

The barrel washers will be located within the mineral spirits return and fill shelters. The drawings (Figures II.C.2-2(a) through II.C.2-2(j)) provide detailed information on the barrel washers.

Used solvent will be returned from customers via containers and poured into the barrel washers. The barrel will then be placed on roller brushes contained within the barrel washer. As the machine is turned on, the barrel will rotate on the brush and the outside of the barrel will be cleaned. There will also be a nozzle that sprays a stream of solvent into the bottom of the barrel to clean the inside of the barrel. The machine will be turned off and the barrel removed. The procedure will take approximately five seconds per barrel. The barrel will then be refilled using a pump and nozzle (Figure II.C.2-3(a)) similar to a gasoline pump. The waste is transferred to the tanks via piping and a pump (Figure II.C.2-3(b)).

The used solvent will go to a sump in the bottom of the barrel washer and will be automatically pumped to the used mineral spirits storage tank. There is a basket in the sump that collects sludge. Approximately twice a day, this basket will be removed and sludge will be removed and placed into a sludge container for shipment to a Safety-Kleen recycle center for recycling or disposal.

The barrel washer will be a totally enclosed unit. A small amount of mist will be generated while operating the unit. This will be controlled by closing the lid of the unit.

The tanks will be designed and constructed to be compatible with the materials stored in them. Typical construction and installation standards for the aboveground tanks are shown in Figures II.C.2-4(a) through II.C.2-4(f). All tanks will be vented in accordance with National Fire Protection Association (NFPA) standards, and the tanks will be equipped with high-level alarms. The design and installation of the tank alarm system is shown in Figures II.C.2-5(a) through II.C.2-5(f). The tank seams will be lapped with

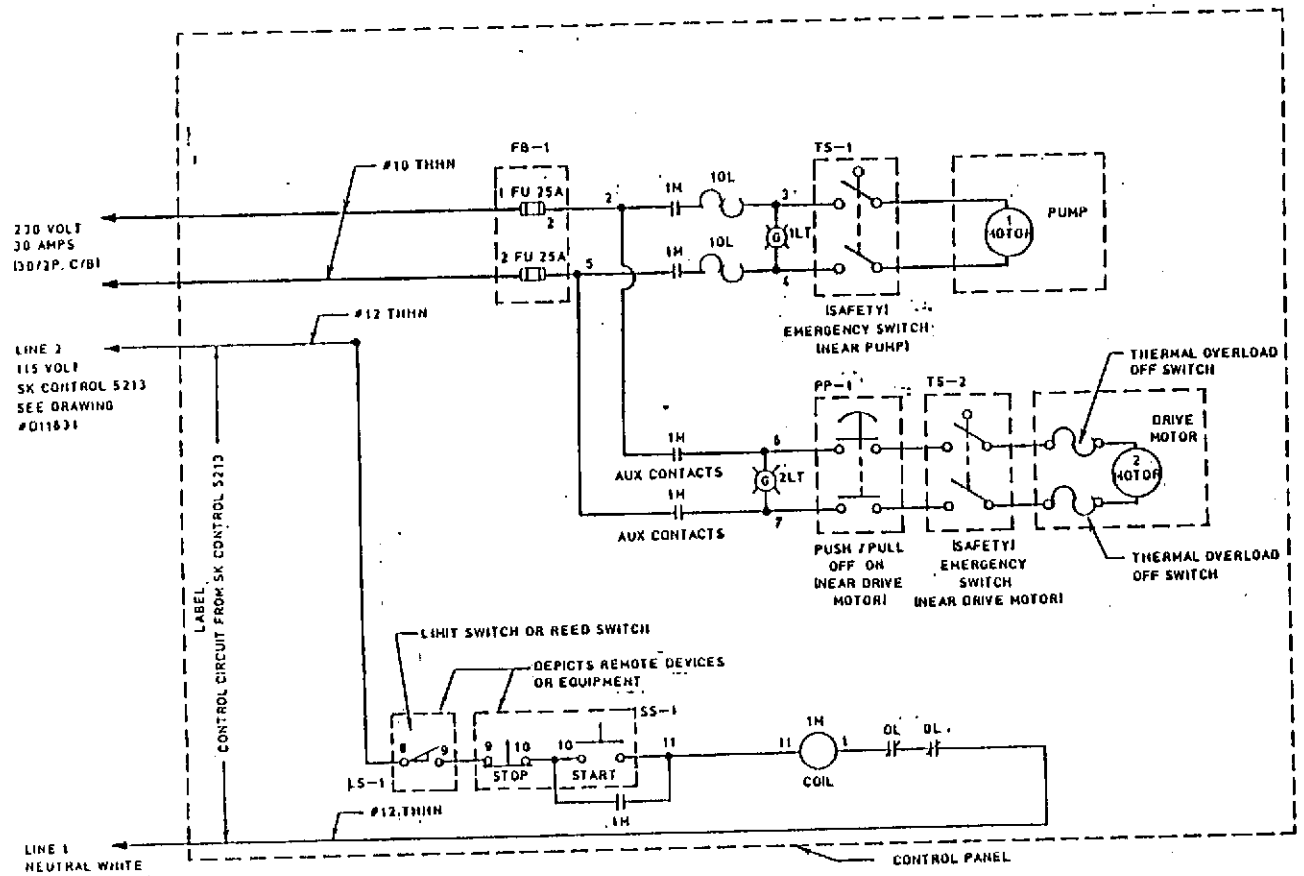

"PANEL WIRING" & ELEMENTARY DIAGRAM

N.T.S. (ONE BARREL WASHER)

POWER WIRING
CONTROL WIRING

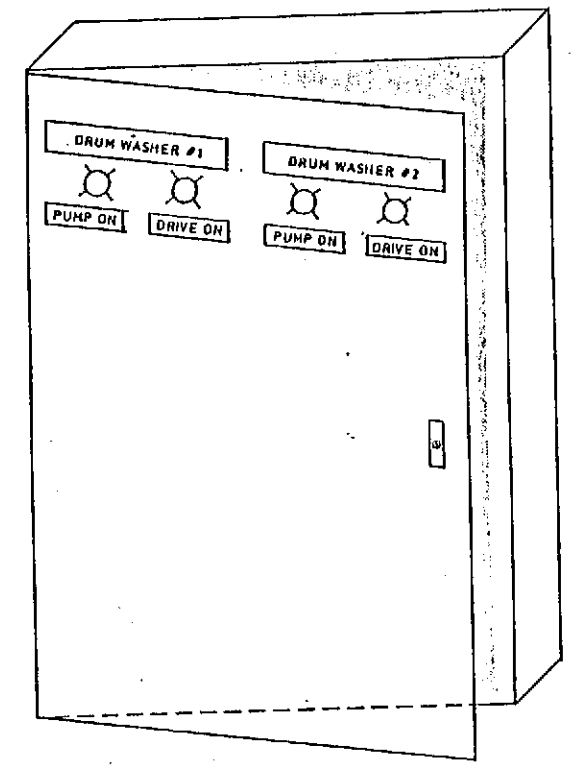

PANEL FRONT

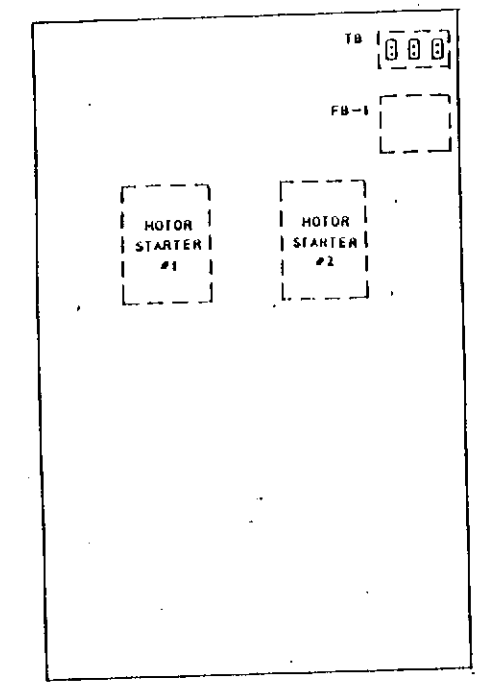

PANEL INTERIOR

CONTROL PANEL MAKE-UP

N.T.S.

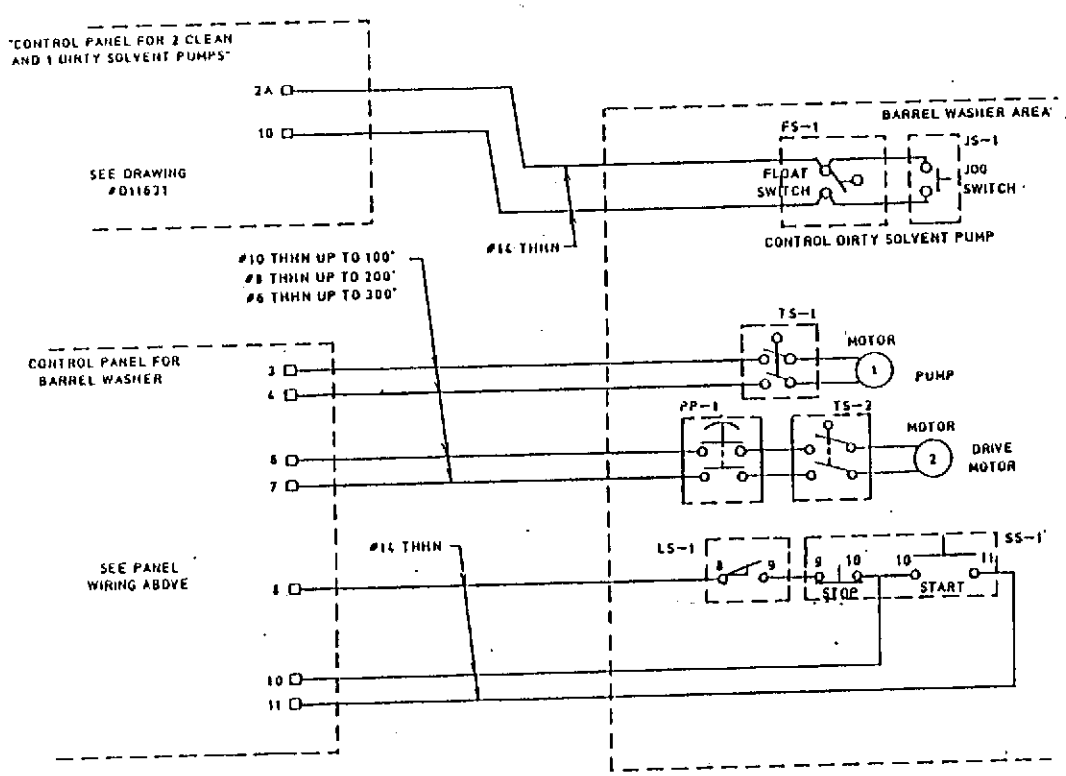

WIRING DIAGRAM

N.T.S.

BILL OF MATERIAL

TAG	QUANTITY	DESCRIPTION
FB-1	1	FUSE BLOCK WITH FIN FUSES LITTLE FUSE LH 250 30 2P FUSES FLNR.25
STARTER	2	NEMA SIZE #1 MAGNETIC STARTER SQ D 8536-SBO 1S
1LT	2	PUMP PILOT LIGHT - GREEN - 240 VOLT SQ D 9001 KP7R9 W/TRANSFORMER
2LT	2	DRIVE MOTOR PILOT LIGHT-GREEN - 240 VOLT SQ D 9001 KP2R9 WITH TRANSFORMER
PANEL	1	UNIVERSAL BOX WITH PIANO HINGE, SINGLE POINT L HANDLE, LOCK, 8" DEEP, 36" HIGH, 24" WIDE

REMOTE ITEMS

SS-1	1	START-STOP STATION 9001 BR20S
TS-1,2	2	2-POLE TOGGLE SWITCH, 20A RATED SQ D 2510 KRL
JS-1	1	JOG SWITCH, 1-POLE, 20A RATED
FS-1	1	FLOAT SWITCH, 1-POLE, 10A RATED
LS-1	1	LIMIT SWITCH OR REED SWITCH MAKES WHEN BARREL IS IN PLACE 9007 CL61J
PP-1	1	2 POLE TOGGLE SWITCH, START STOP STATION 2HP CONTACT RATING

THIS DOCUMENT HAS BEEN PREPARED AND IS APPROVED BY ME FOR INCLUSION IN ENVIRONMENTAL PERMIT APPLICATIONS ONLY. IT IS NEITHER APPROVED NOR IS IT TO BE USED FOR EQUIPMENT OR MATERIAL PROCUREMENT, CONSTRUCTION, OR ANY OTHER PURPOSE.

Figure II.C.2-2(a)

NO.	DESCRIPTION	BY	CHKD	APPR
	REVISIONS			

TITLE: ELECTRICAL CONTROL PANEL FOR DRUM WASHER "90"

SAFETY-KLEEN CORP.
777 N. ORTHER ROAD, ELGIN, ILLINOIS 60120 PHONE 312/697-6460

PROJ. ENG. APPR. | CONSTRUCTION APPR. | SCALE: NONE | DRAWN: DK | DATE
BRANCH | DRAWING NO. D-14269

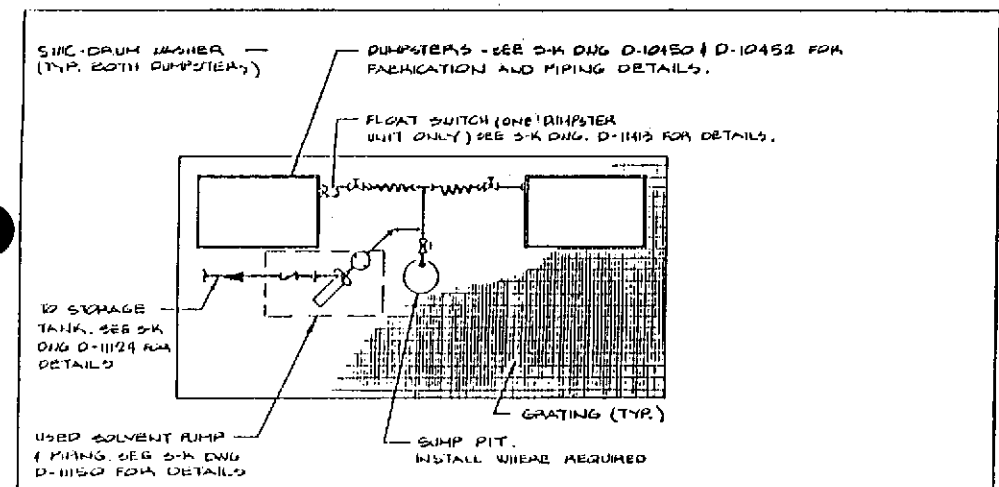

DOUBLE SWIC INSTALLATION
W/ ABOVE GROUND STORAGE

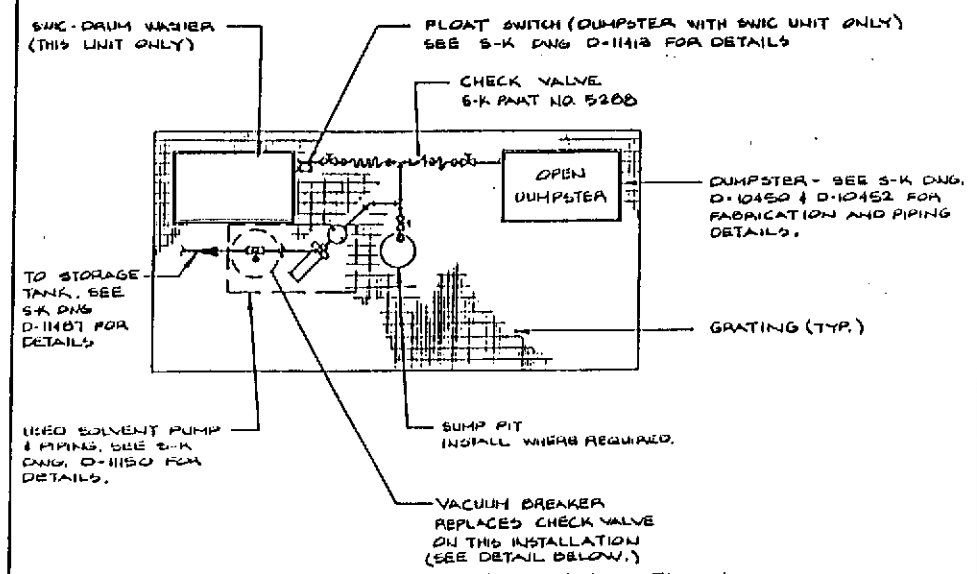

SINGLE SWIC INSTALLATION
W/ UNDERGROUND STORAGE

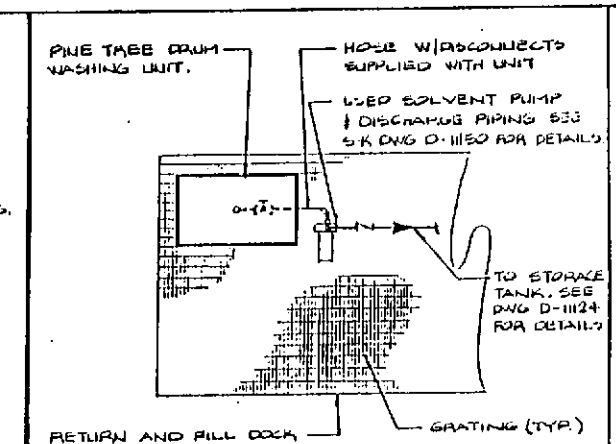

PINE TREE INSTALLATION
W/ ABOVE GROUND STORAGE

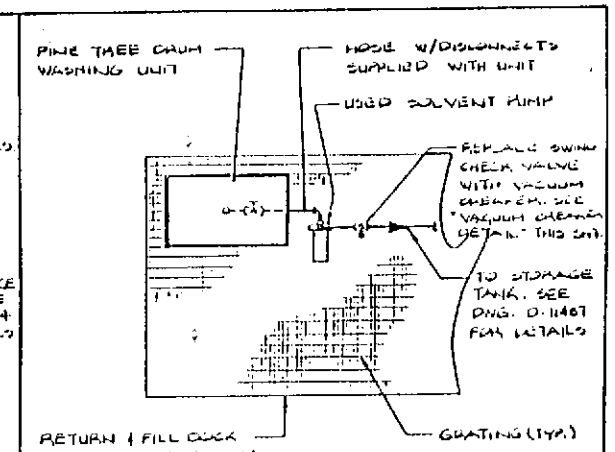

PINE TREE INSTALLATION
W/ UNDERGROUND STORAGE

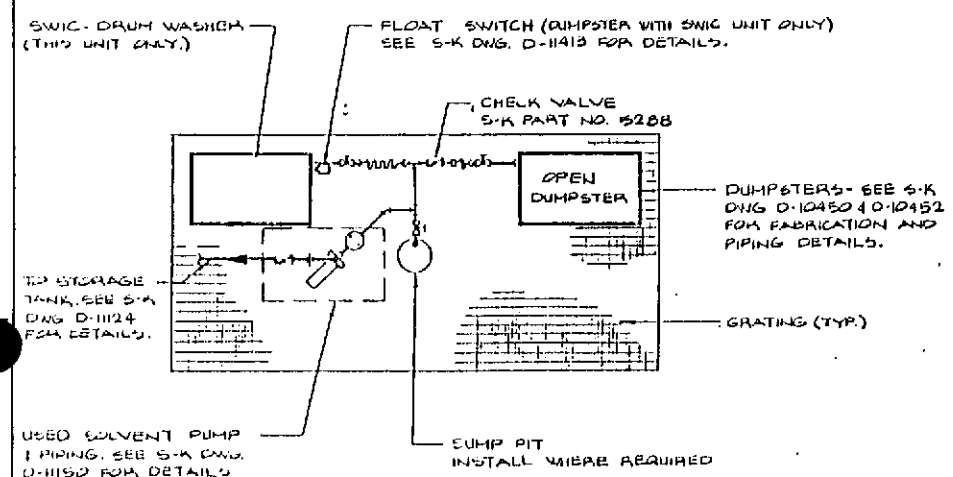

SINGLE SWIC INSTALLATION
W/ ABOVE GROUND STORAGE

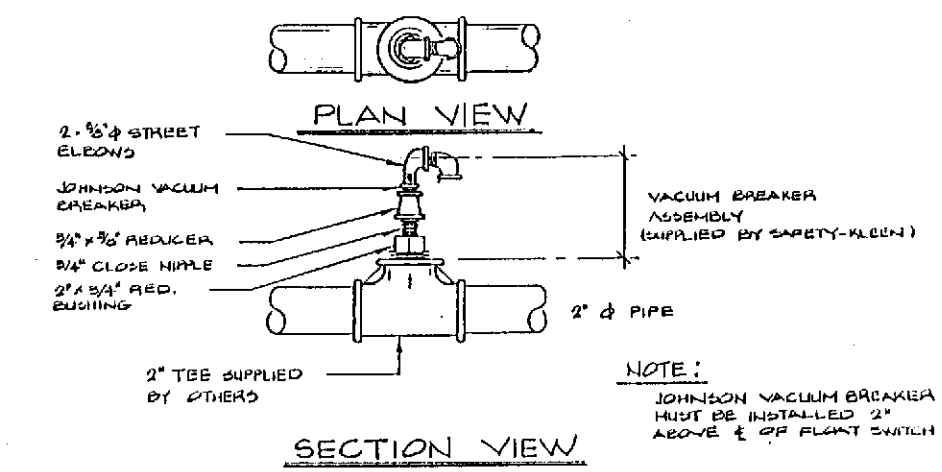

VACUUM BREAKER DETAIL

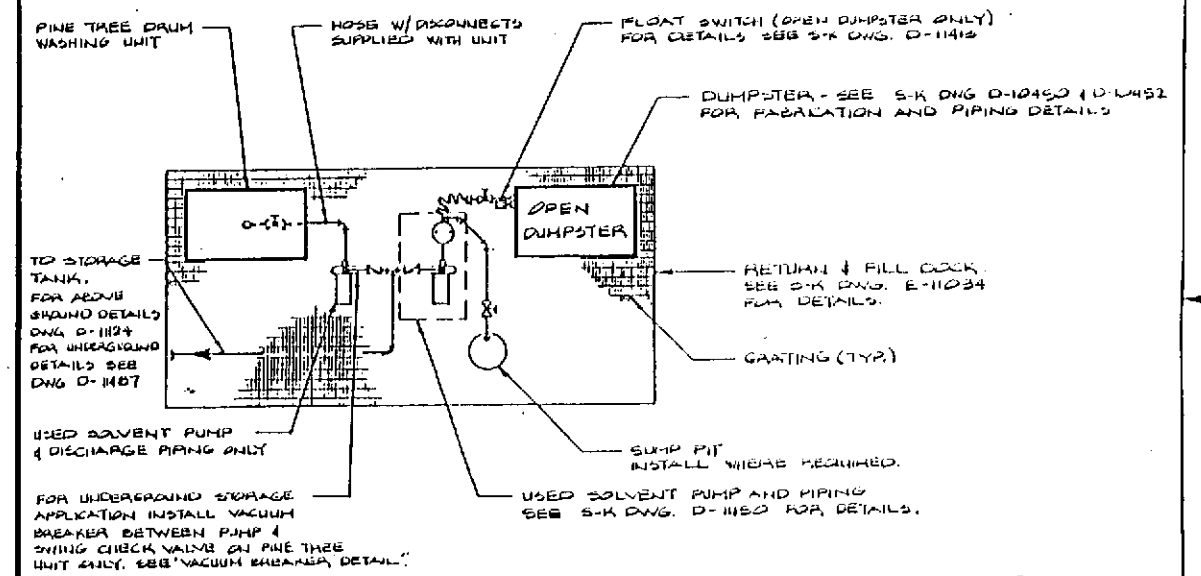

PINE TREE AND OPEN DUMPSTER INSTALLATION
FOR ABOVE GROUND & UNDERGROUND STORAGE

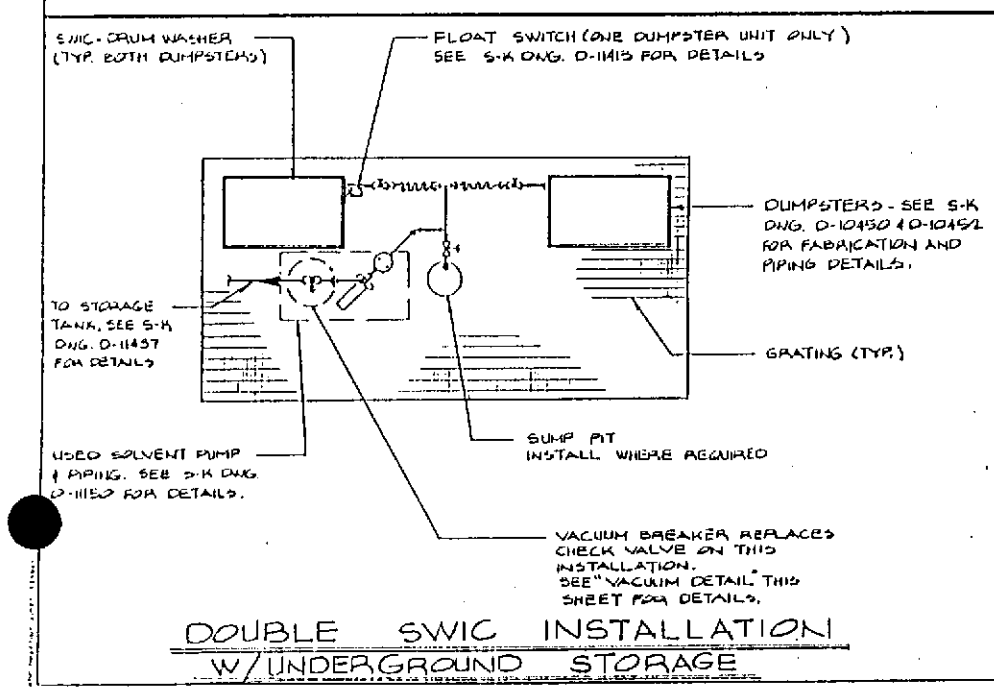

DOUBLE SWIC INSTALLATION
W/ UNDERGROUND STORAGE

THIS DOCUMENT HAS BEEN PREPARED AND IS APPROVED BY ME FOR INCLUSION IN ENVIRONMENTAL PERMIT APPLICATIONS ONLY. IT IS NEITHER APPROVED NOR IS IT TO BE USED FOR EQUIPMENT OR MATERIAL PROCUREMENT, CONSTRUCTION, OR ANY OTHER PURPOSE.

Figure II.C.2-2(b)

NO	DESCRIPTION	BY	CHK	APPR	DATE

REVISIONS

TITLE: TYPICAL DRUM WASHER SCHEMATICS

SAFETY-KLEEN CORP.

SCALE	DRAWN	CHECKED	ENGINEERING APPR	OPERATION APPR	DATE
NONE	GD				12-20-01

FOR SERVICE CENTER BRANCH:

DRAWING NO. D-14288 REV

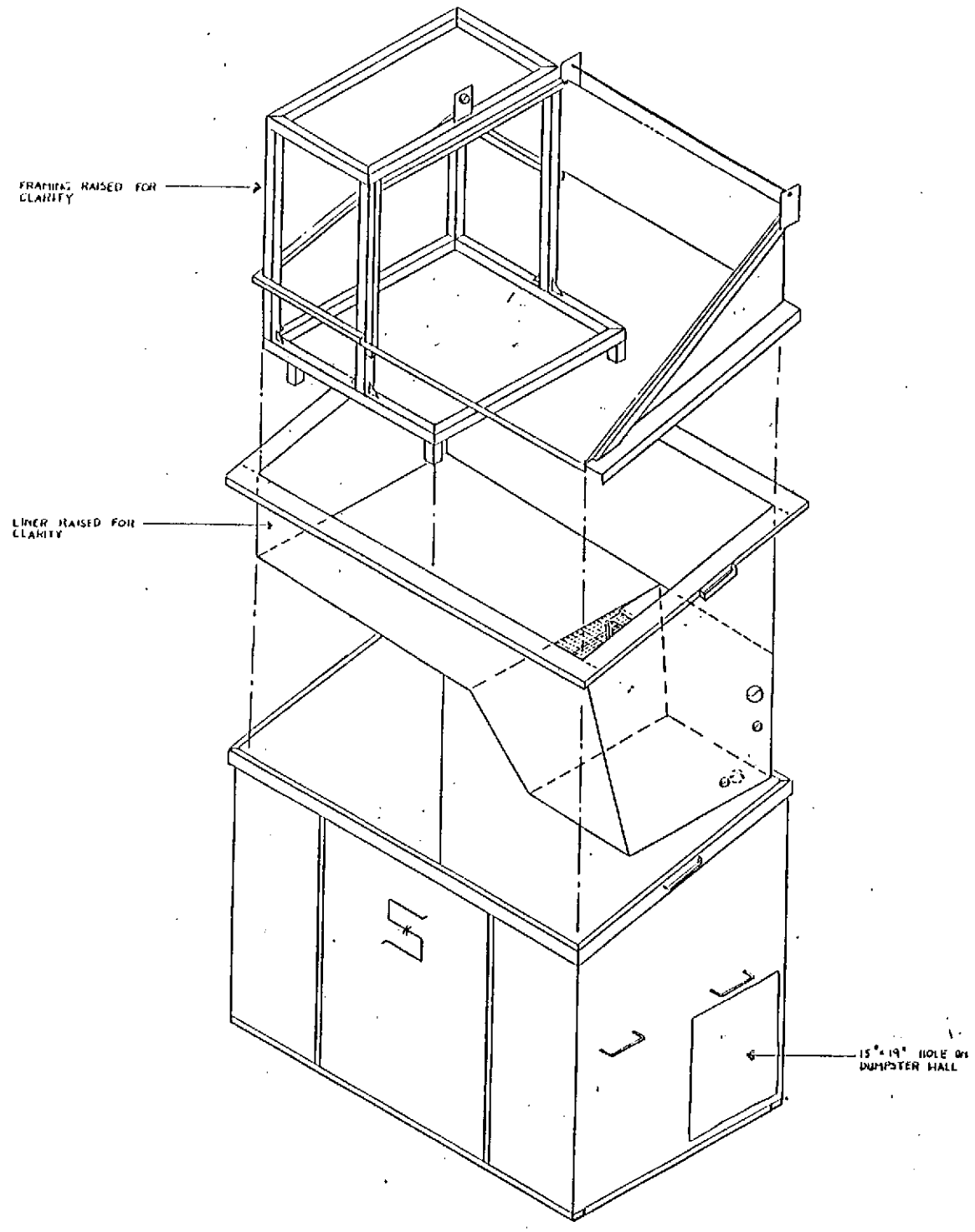

THIS DOCUMENT HAS BEEN PREPARED AND IS APPROVED BY ME FOR INCLUSION IN ENVIRONMENTAL PERMIT APPLICATIONS ONLY. IT IS NEITHER APPROVED NOR IS IT TO BE USED FOR EQUIPMENT OR MATERIAL PROCUREMENT, CONSTRUCTION, OR ANY OTHER PURPOSE.

Figure II.C.2-2(c)

SOUTHWEST INDUSTRIAL CONSTRUCTORS INC.

DATE: 1/19/90
JOB NO.
DWN: ALI
CHK:

SAFETY - KLEEN DRUM WASHER

SHEET NO. 1

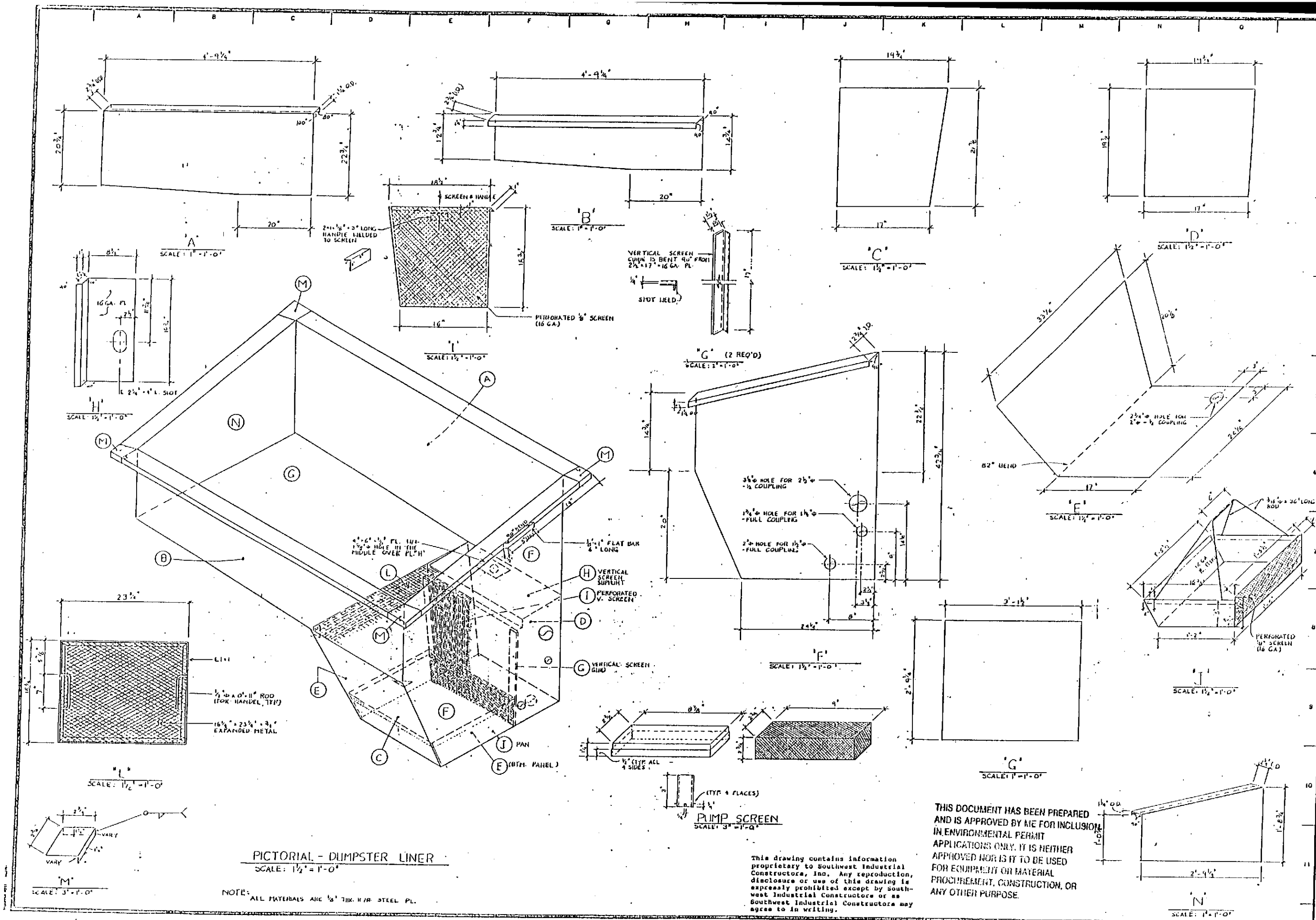

Figure II.C.2.2(d)

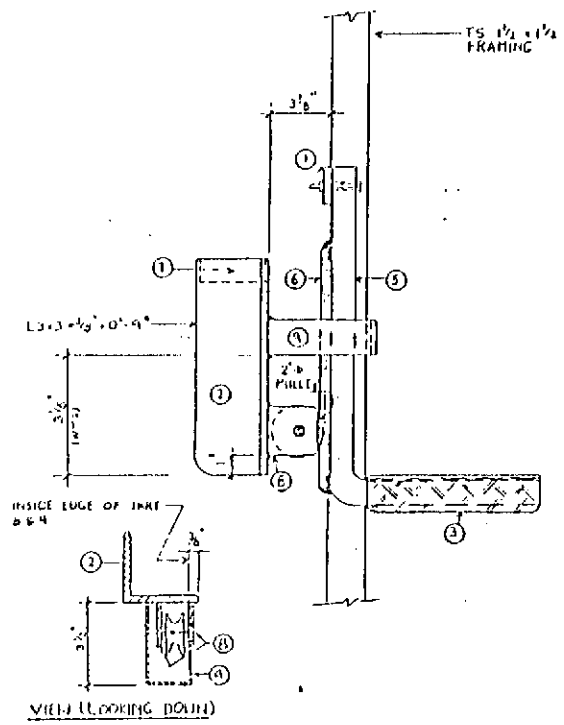

FRONT VIEW
SCALE 3" = 1'-0"

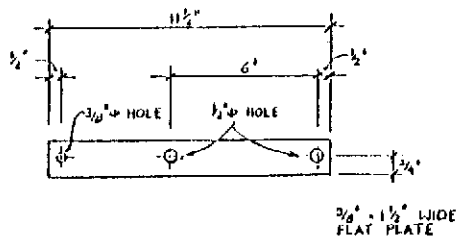

"1"
SCALE: 3" = 1'-0"

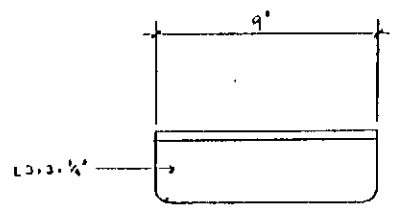

"2"
SCALE: 3" = 1'-0"

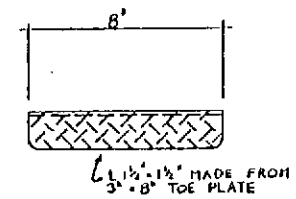

"3"
SCALE: 3" = 1'-0"

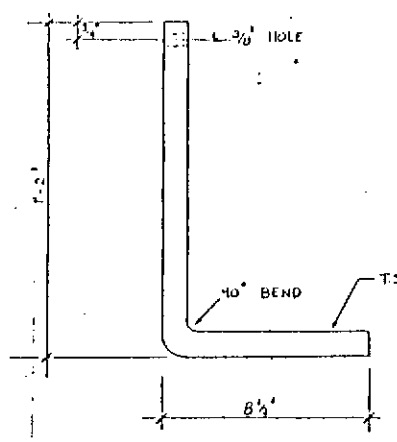

"5"
SCALE: 3" = 1'-0"

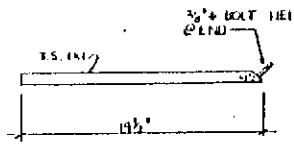

"4"
SCALE: 1½" = 1'-0"

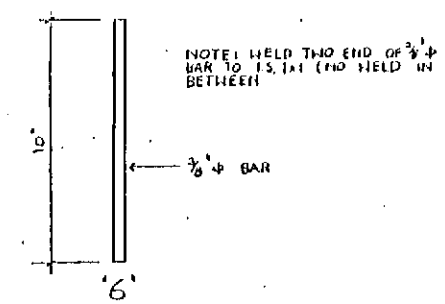

"6"
SCALE: 3" = 1'-0"

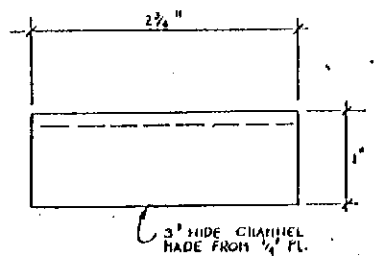

"7"
SCALE: 12" = 1'-0"

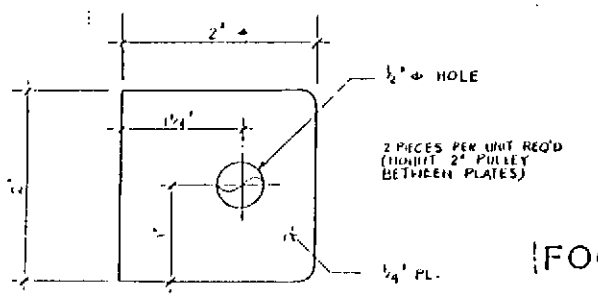

"8"
SCALE: 12" = 1'-0"

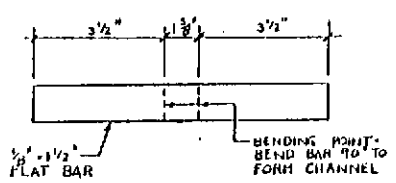

NOTE: TO FABRICATE THIS PART FIRST BEND ⅜" x 1½" x 12" LONG FLAT BAR. THEN THEN TRIM LEGS TO 3½"

"9"
SCALE: 3" = 1'-0"

FOOT PEDAL ASSEMBLY & DETAILS

MEMBER	NO. REQ'D	TYPE	LENGTH	CUT 1	CUT 2
10	2	T.S. 1¼ x 1½	32⅜"	45°	45°
11	2		29⅜"	45°	45°
12	3		32½"	90°	90°
13	1		16¼"	90°	90°
14	2		33"	45°	45°
15	2		18"	45°	45°
16	1	T.S. 1x1	35⅜"	45°	45°
17	2		19"	45°	90°
18	1		26¼"	45°	90°
19	1		31¼"	45°	90°
20	4	T.S. 1¼ x 1¼	3"	90°	90°
21	1	L 1x1	39½"	90°	90°
22	1	T.S. 1x1	24"	90°	90°

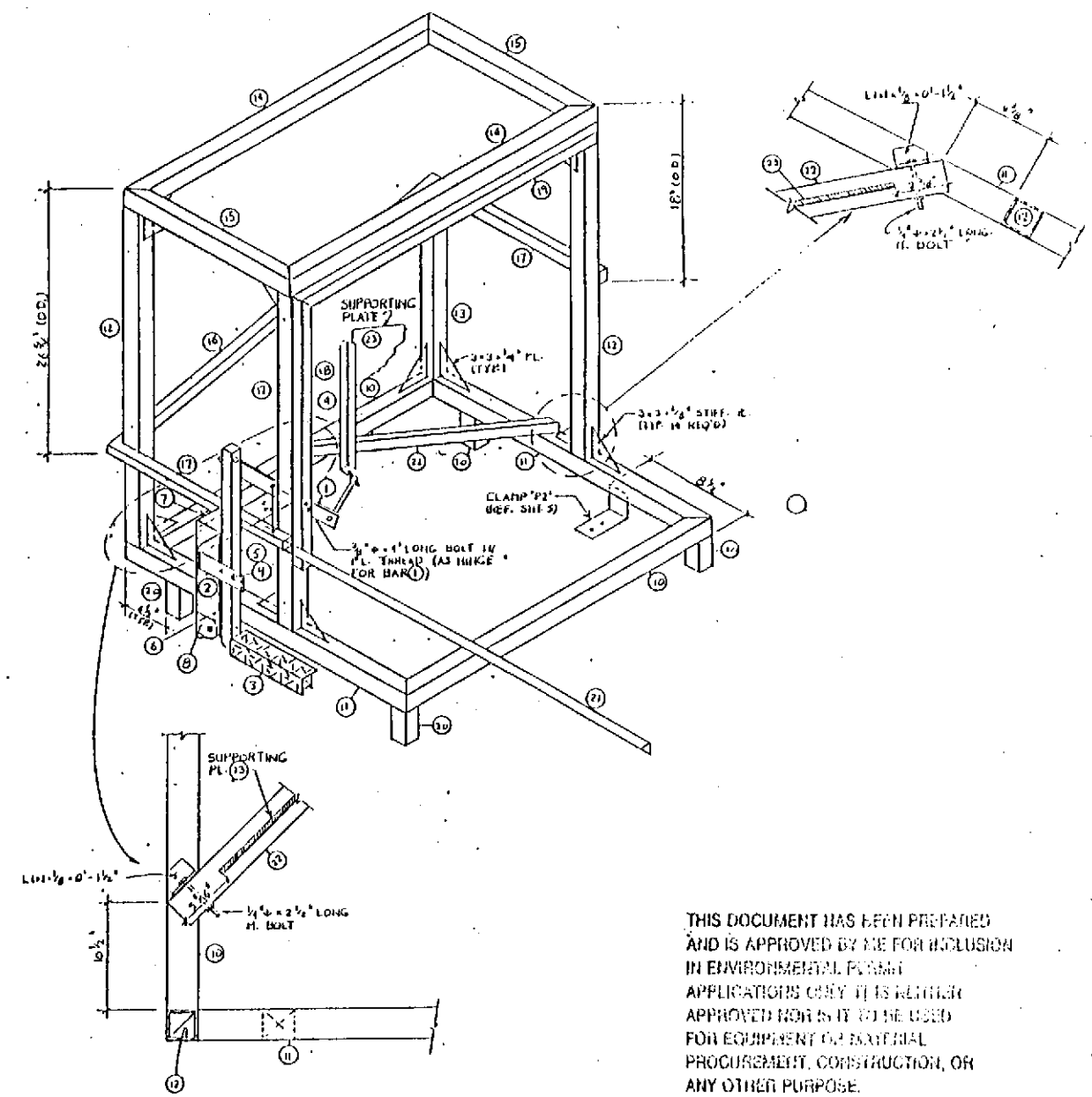

THIS DOCUMENT HAS BEEN PREPARED AND IS APPROVED BY ME FOR INCLUSION IN ENVIRONMENTAL PERMIT APPLICATIONS ONLY. IT IS NEITHER APPROVED NOR IS IT TO BE USED FOR EQUIPMENT OR MATERIAL PROCUREMENT, CONSTRUCTION, OR ANY OTHER PURPOSE.

SOUTHWEST INDUSTRIAL CONSTRUCTORS, INC.

DATE: 4/19/90
JOB NO.
DWN. ALI
CHK.

SAFETY - KLEEN DRUM WASHER

SHEET NO. 3

Figure II.C.2-2(e)

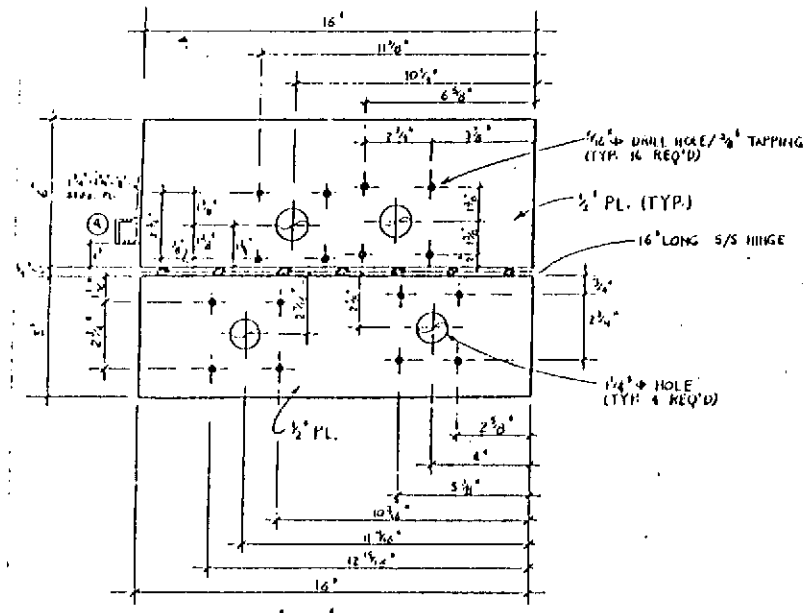

'23'
SCALE: 3" = 1'-0"

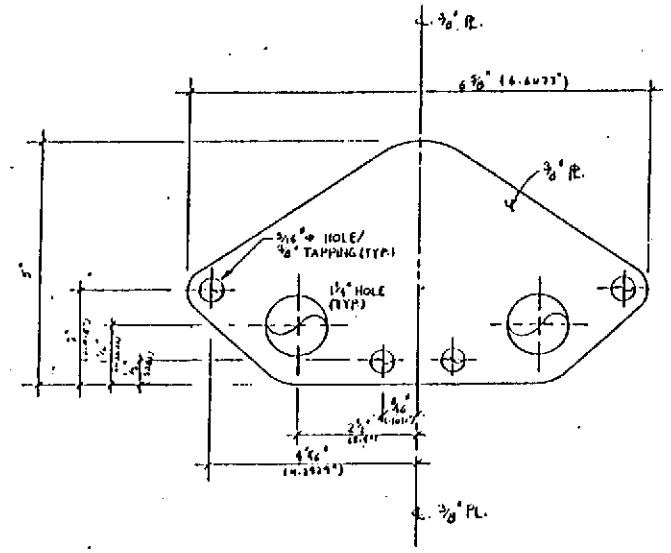

'26'
SCALE: 6" = 1'-0"

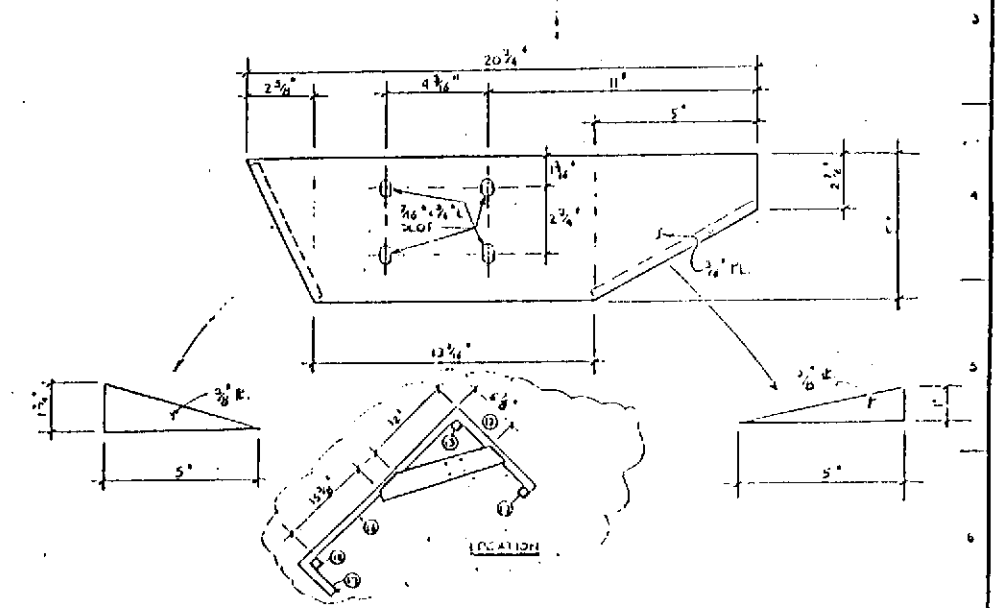

MOTOR MOUNTING BRACKET
N.T.S.

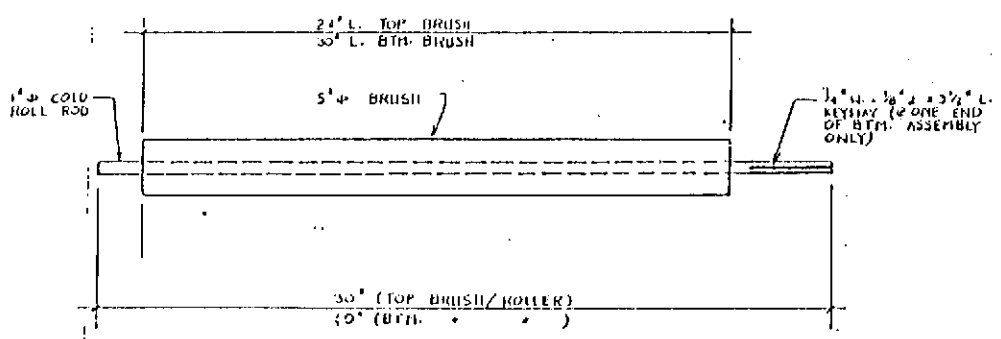

'28'
SCALE: 3" = 1'-0"

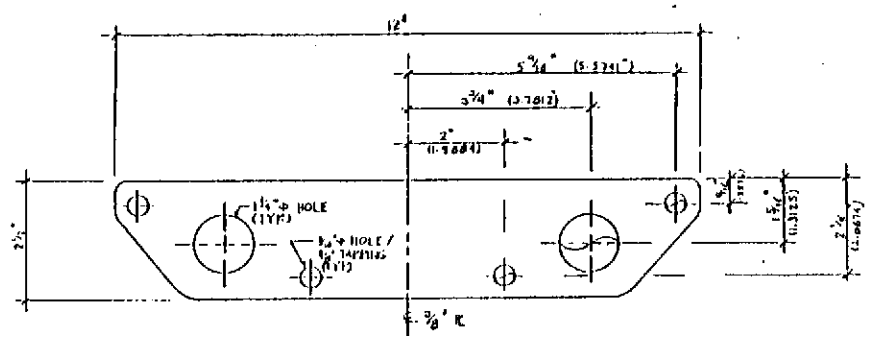

'27'
SCALE: 6" = 1'-0"

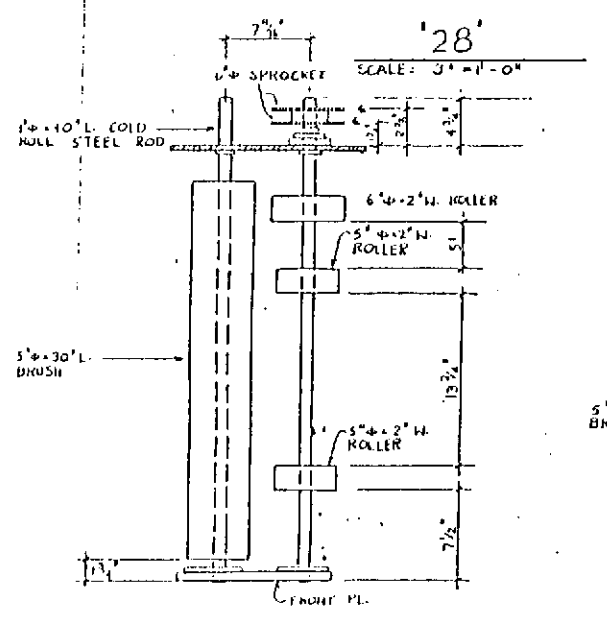

BTM. ASSEMBLY

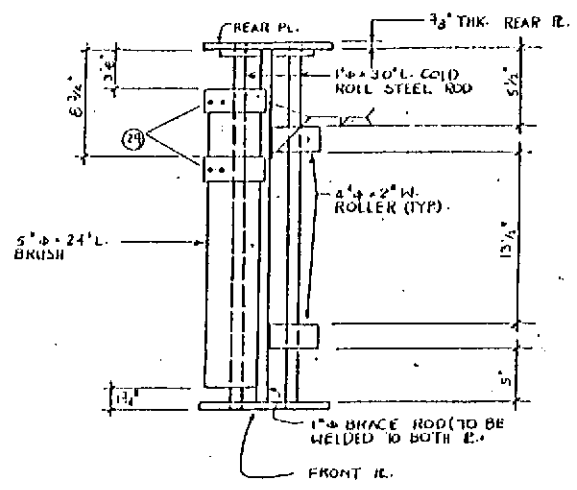

TOP ASSEMBLY

ROLLER/BRUSH ASSEMBLY
SCALE: 1 1/2" = 1'-0"

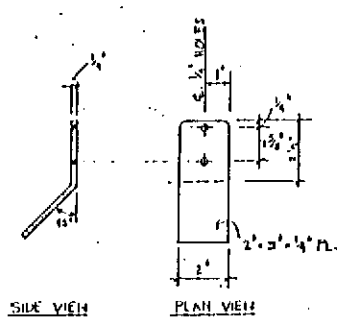

'29' BRACKET
SCALE: 3" = 1'-0"

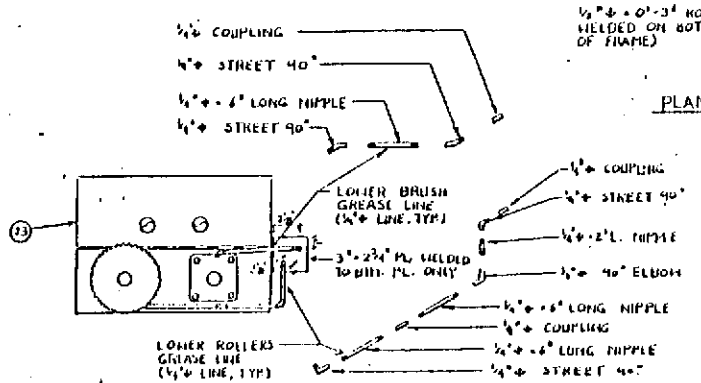

ROLLER/BRUSH GREASE LINE

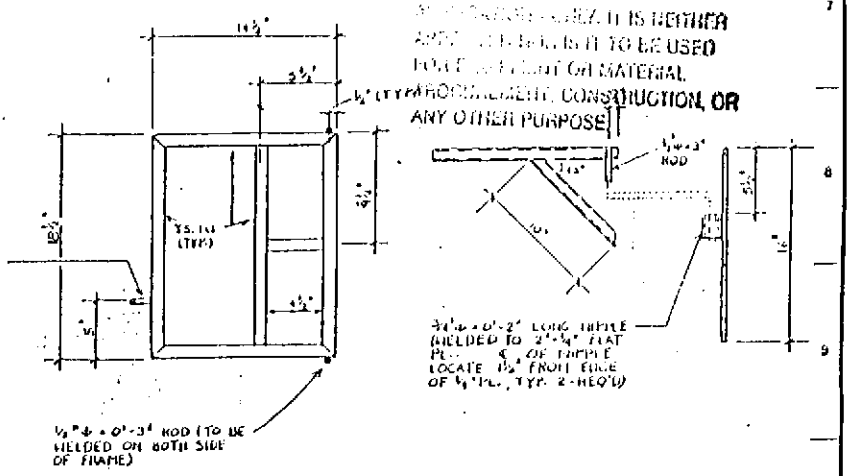

BARREL WASHER RACK
SCALE: 1 1/2" = 1'-0"

SOUTHWEST INDUSTRIAL CONSTRUCTORS, INC.

DATE 1/14/90
DRN. ALI

SAFETY KLEEN DRUM WASHER

SHEET NO. 4

Figure II.C.2.2(f)

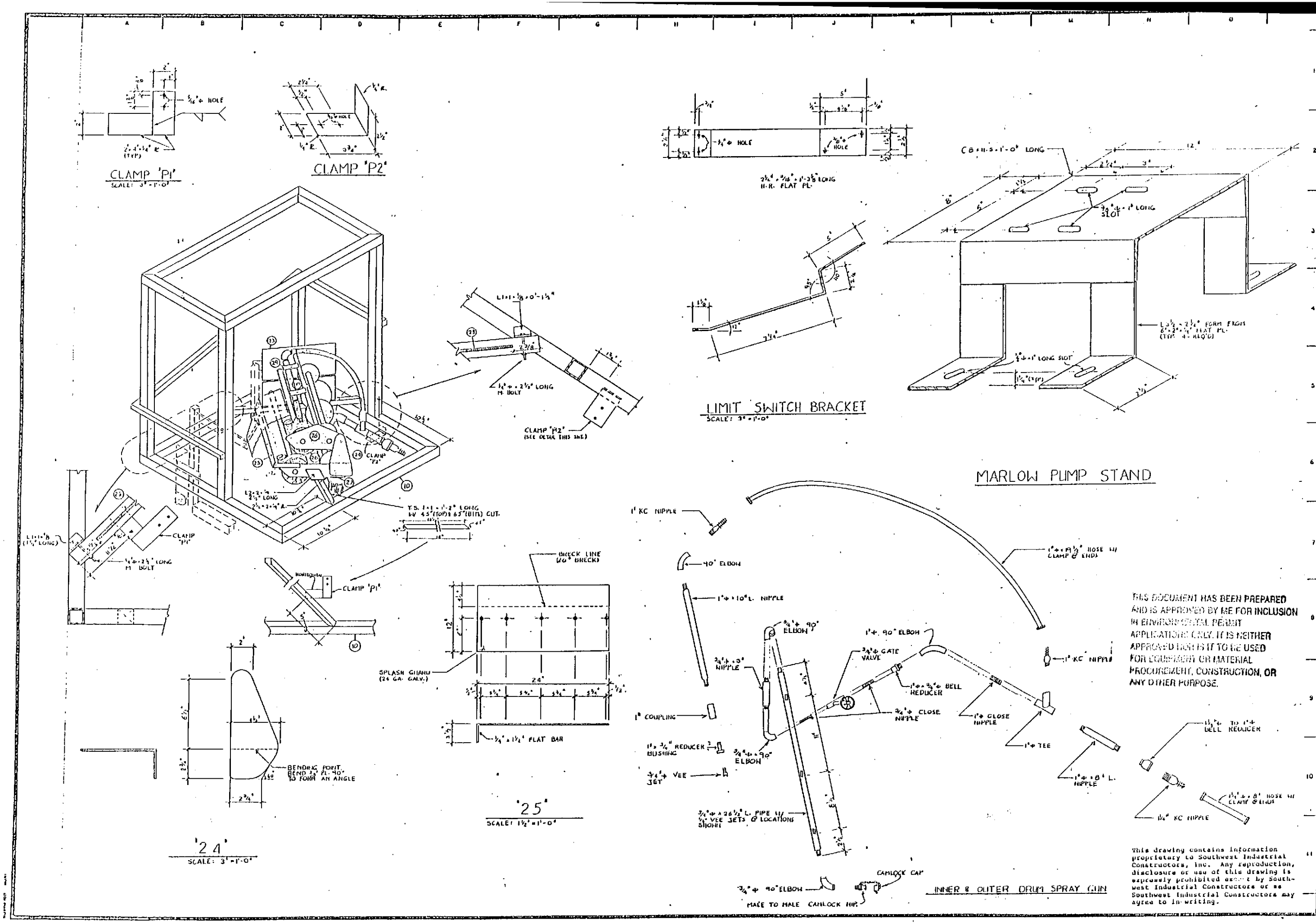

II.C.2-2G

Figure II.C.2-2(g)

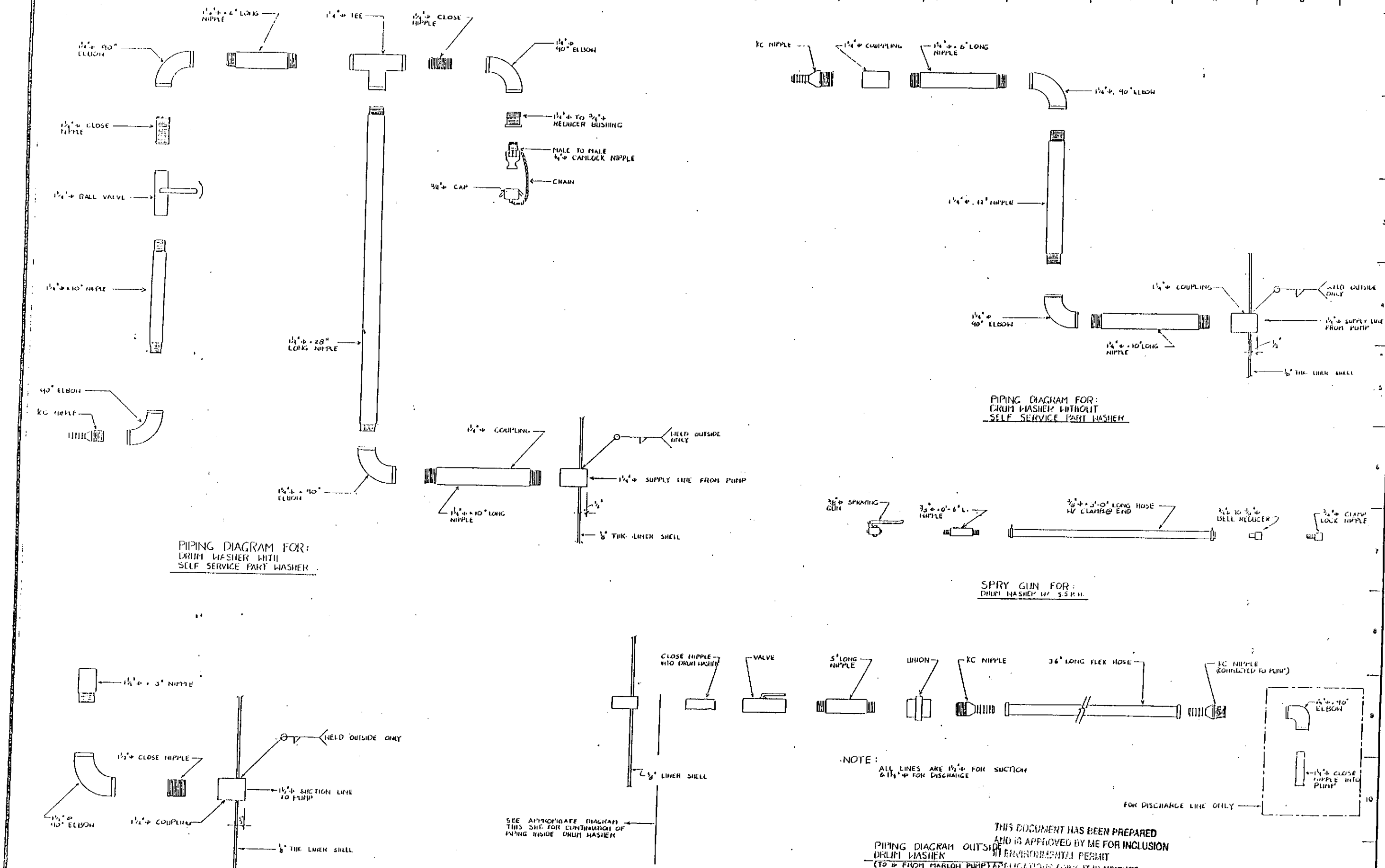

THIS DOCUMENT HAS BEEN PREPARED AND IS APPROVED BY ME FOR INCLUSION IN ENVIRONMENTAL PERMIT APPLICATIONS ONLY. IT IS NEITHER APPROVED NOR IS IT TO BE USED FOR EQUIPMENT OR MATERIAL PROCUREMENT, CONSTRUCTION, OR ANY OTHER PURPOSE.

SOUTHWEST INDUSTRIAL CONSTRUCTORS, INC.

DATE 1/19/79

JOB NO.

DWN. BY

CHK.

SAFETY-KLEEN DRUM WASHER

SHEET NO. 6

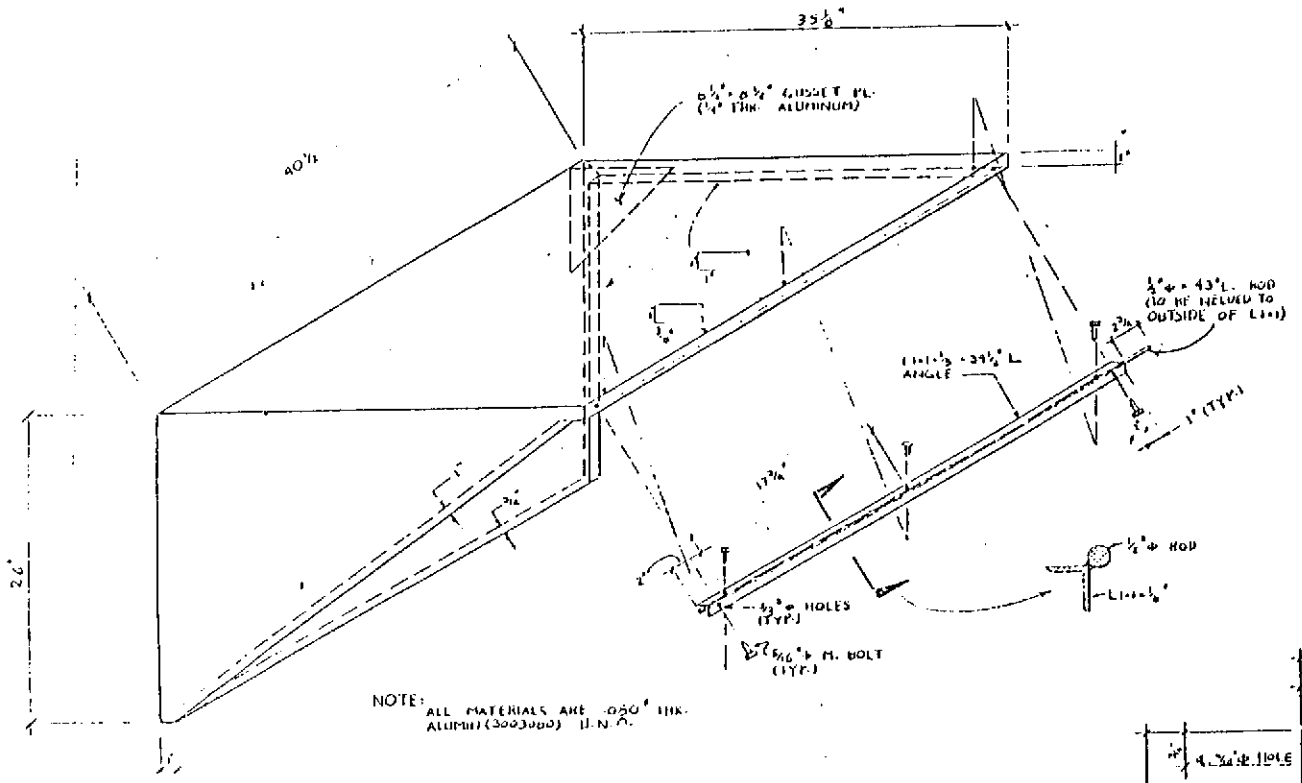

DRUM WASHER LID
SCALE: 1 1/2" = 1'-0"

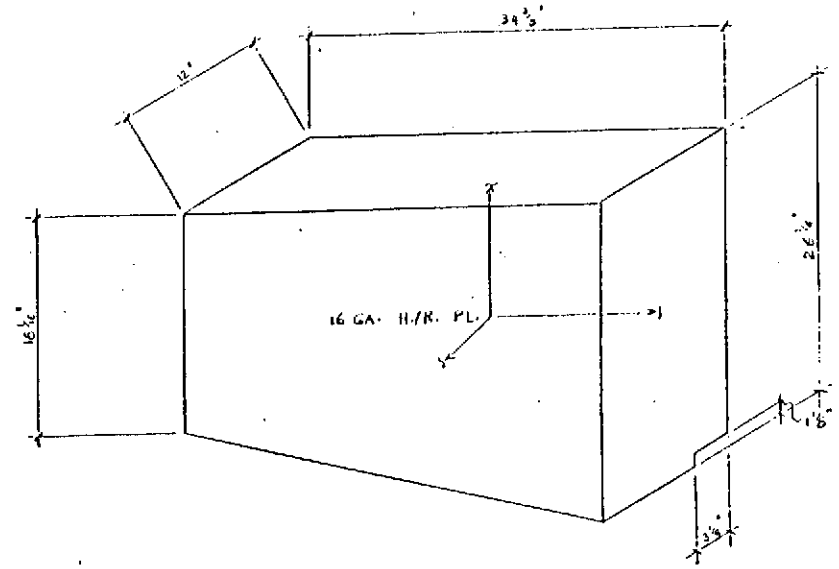

MOTOR COVER
SCALE: 1 1/2" = 1'-0"

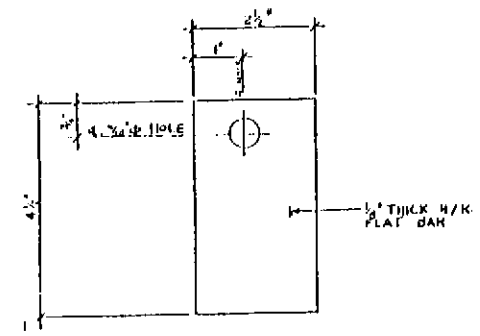

HINGE BRACKET
SCALE: 6" = 1'-0"

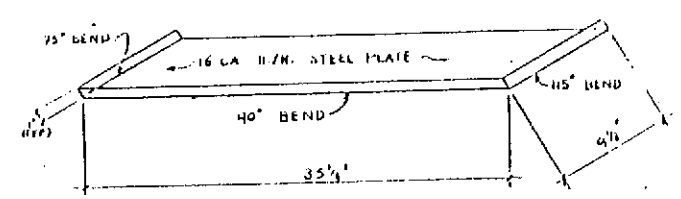

BOTTOM PAN FOR MOTOR COVER
SCALE: 1 1/2" = 1'-0"

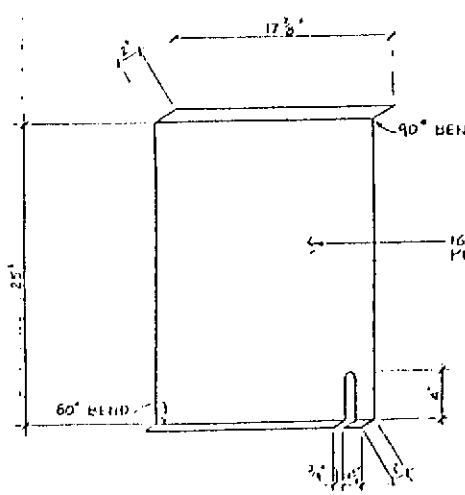

CABINET FRONT
SCALE: 1 1/2" = 1'-0"

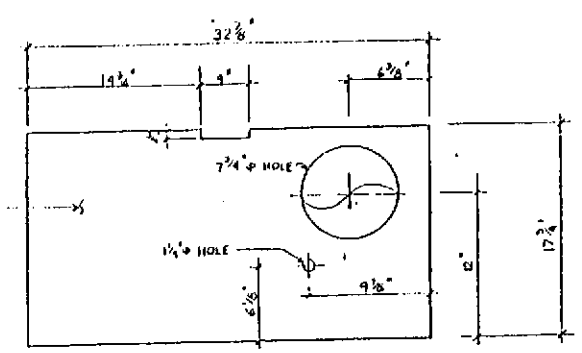

CABINET TOP
SCALE: 1 1/2" = 1'-0"

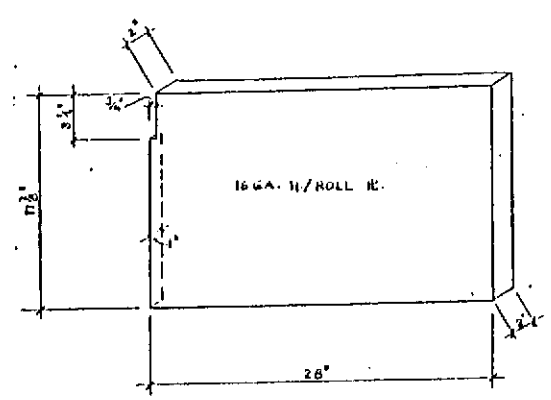

CABINET BACK
SCALE: 1 1/2" = 1'-0"

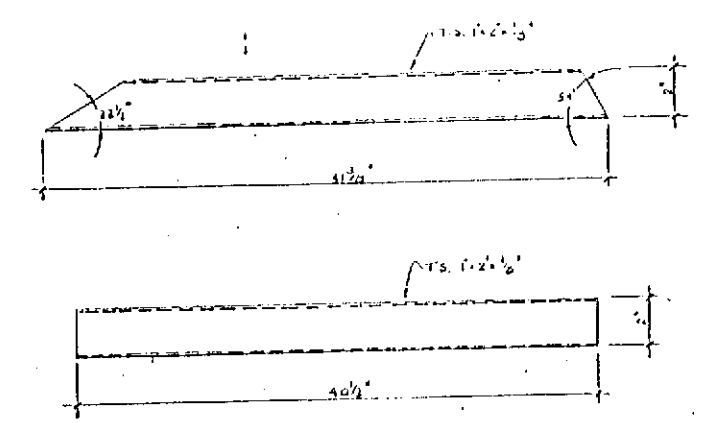

HOOD STIFFENER
N.T.S.

THIS DOCUMENT HAS BEEN PREPARED AND IS APPROVED BY US FOR INCLUSION IN ENVIRONMENTAL PERMIT APPLICATIONS ONLY. IT IS NEITHER APPROVED NOR IS IT TO BE USED FOR EQUIPMENT OR MATERIAL PROCUREMENT, CONSTRUCTION, OR ANY OTHER PURPOSE.

SOUTHWEST INDUSTRIAL CONSTRUCTORS, INC.

DATE 1/ /91
JOB NO.
DWN. ALT
CHK.

SAFETY - KLEEN DRUM WASHER

SHEET NO. 7

Figure II.C.2-2(i)

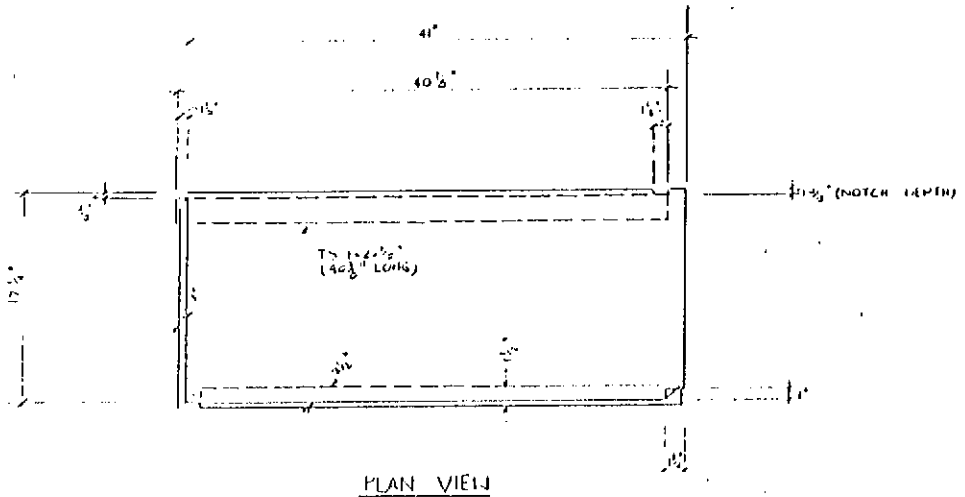

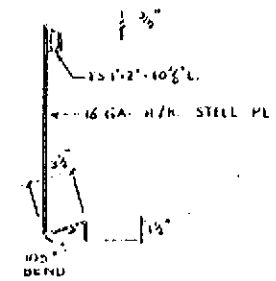

FRONT HOOD SUPPORT
SCALE: 1 1/2" = 1'-0"

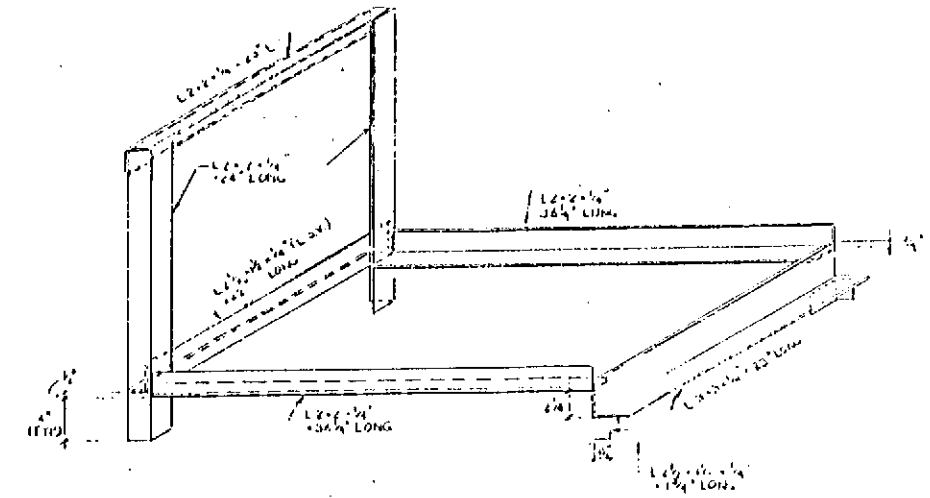

TEMP. SUPPORTING FRAME FOR LINER
SCALE: 1 1/2" = 1'-0"

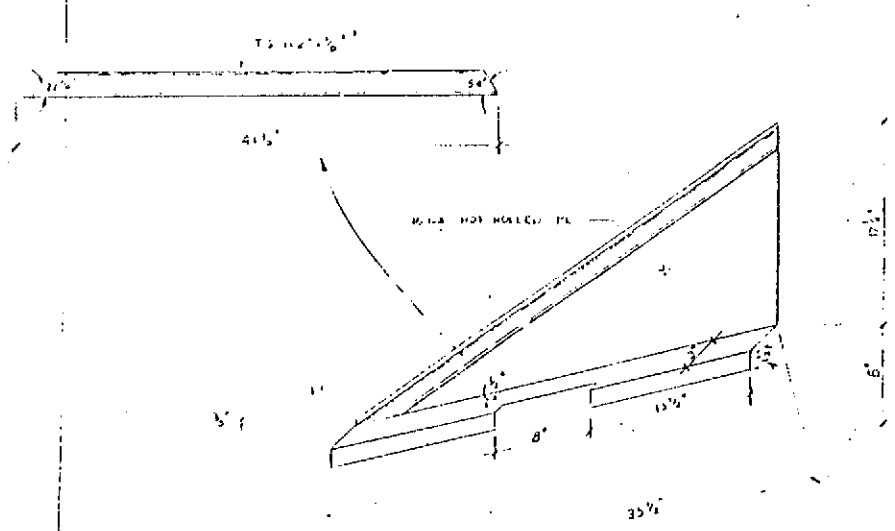

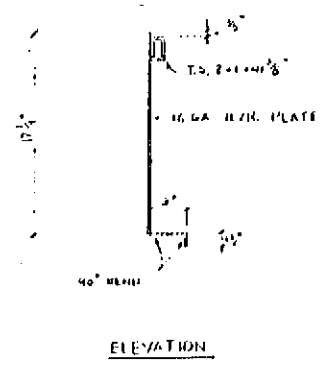

SIDE HOOD SUPPORT
SCALE: 1 1/2" = 1'-0"

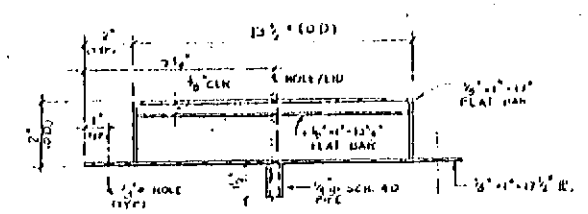

SAFETY LATCH
SCALE: 3" = 1'-0"

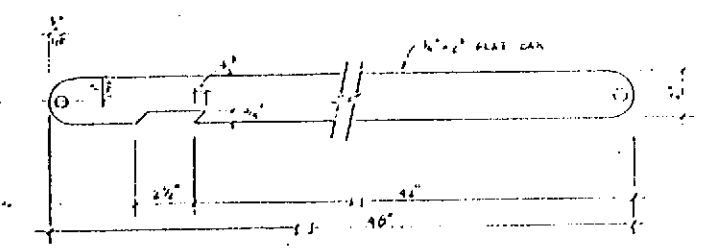

COVER BRACE STEEL
TOP 2-REQ'D PER DRUM WASHER

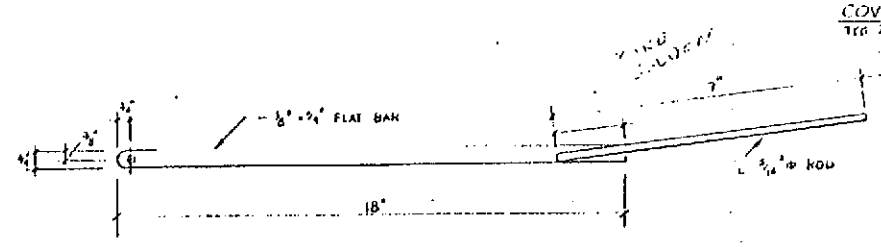

SCALE: 3" = 1'-0"

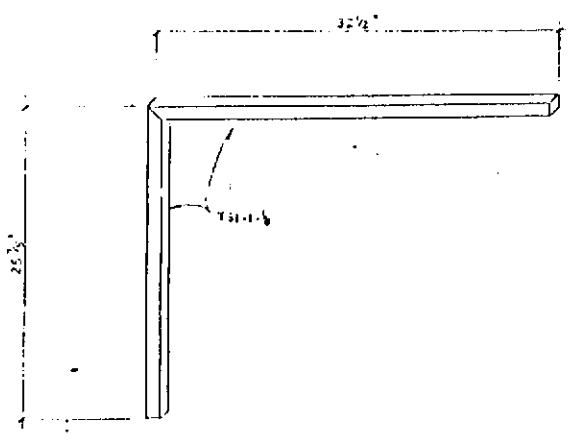

INSIDE HOOD SUPPORT
SCALE: 1" = 1'-0"

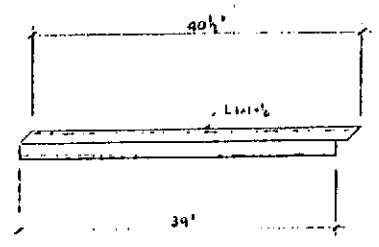

FRONT HOOD BRACE
N.T.S.

SOUTHWEST INDUSTRIAL CONSTRUCTORS INC

DATE 1/11/90
JOB NO.
DWN ALT
CHK

SAFETY - KLEEN DRUM WASHER

SHEET NO. 8

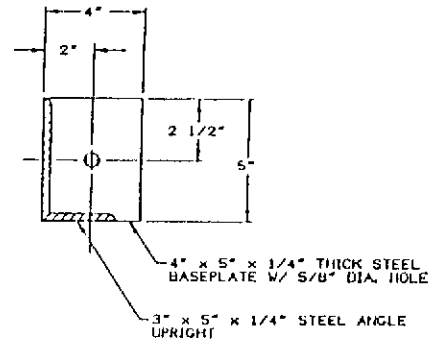

BASEPLATE DETAIL

SCALE: 3" = 1'-0"

NOTE:

SURPLUS HOSE LENGTH CAN BE COILED & STORED ON ARM PROVIDED AT SIDE OF NOZZLE STORAGE BRACKET.

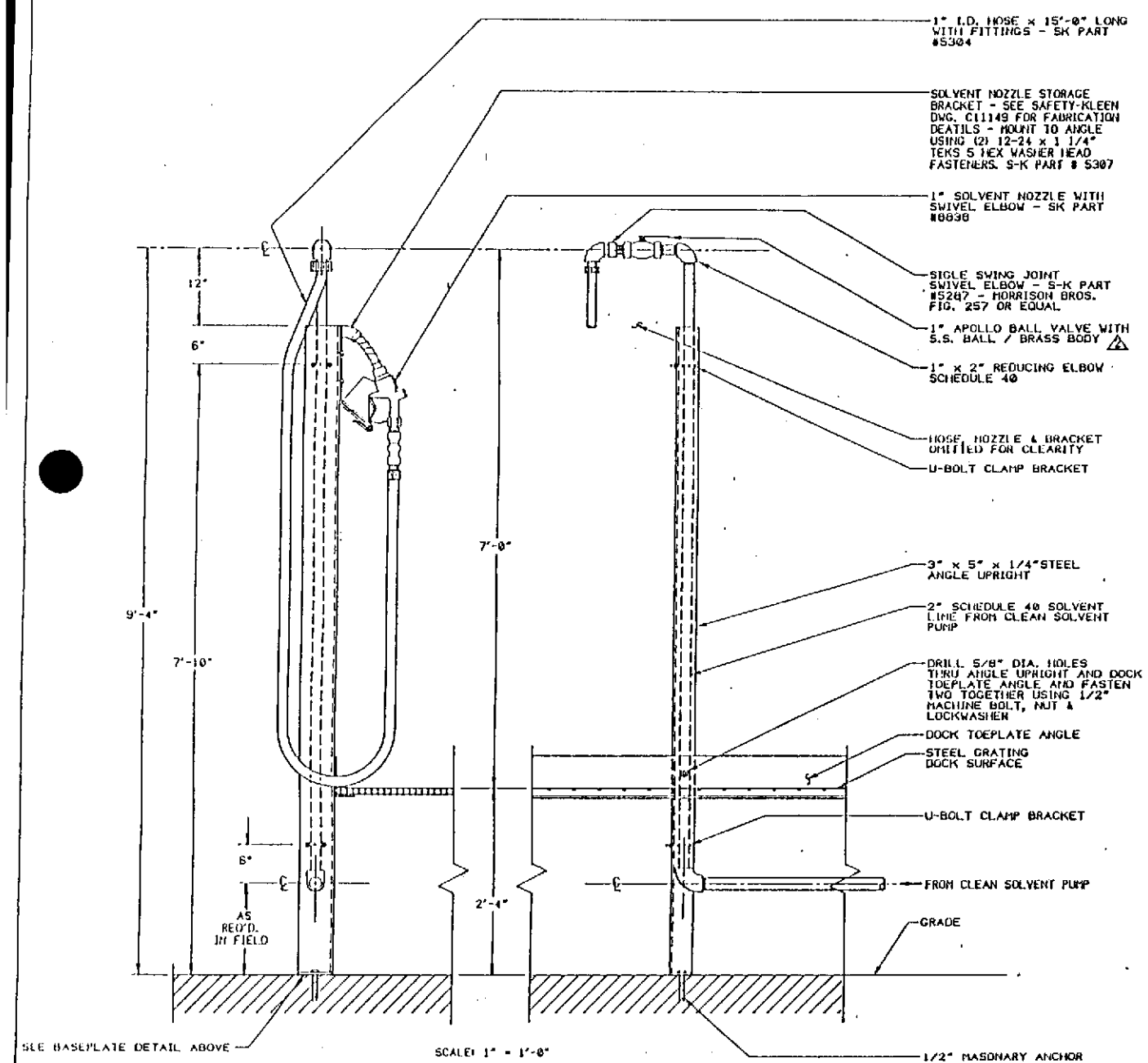

SCALE: 1" = 1'-0"

FRONT VIEW

RIGHT SIDE VIEW

INSTALLATION FOR STANDARD BUILDING PLAN

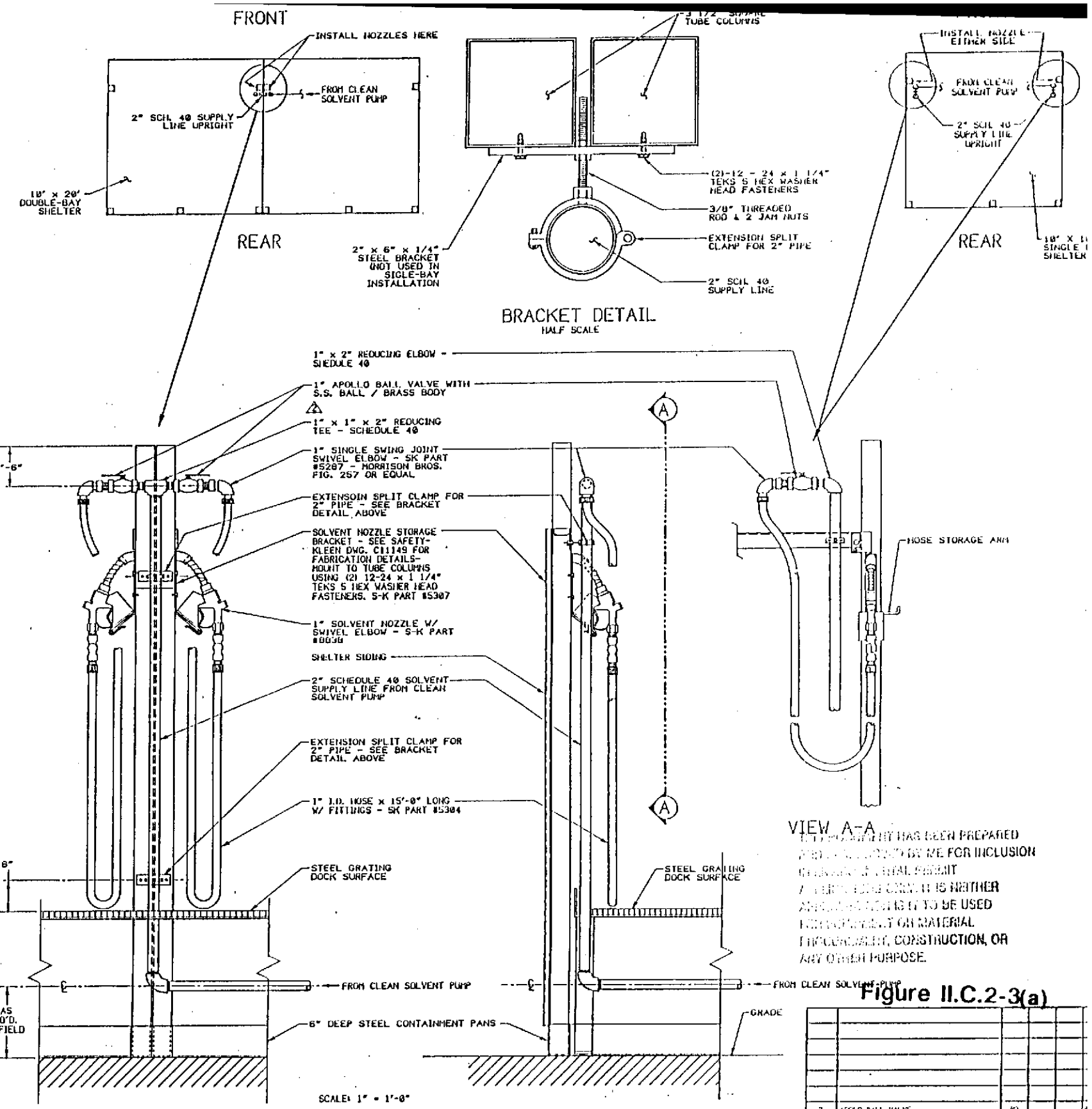

DOUBLE OR MULTIPLE BAY INSTALLATION

SINGLE BAY INSTALLATION

VIEW A-A

[illegible] HAS BEEN PREPARED [illegible] BY ME FOR INCLUSION [illegible] PERMIT [illegible] IS NEITHER [illegible] TO BE USED [illegible] ON MATERIAL FABRICATION, CONSTRUCTION, OR ANY OTHER PURPOSE.

Figure II.C.2-3(a)

NOTES:

1. ALL ITEMS WITH SAFETY-KLEEN PART NO.,REFERENCES WILL BE SUPPLIED TO CONTRACTOR.
2. THIS DRAWING CONTAINS INFORMATION PROPRIETARY TO SAFETY-KLEEN CORP. ANY REPRODUCTION, DISCLOSURE OR USE OF THIS DRAWING IS EXPRESSLY PROHIBITED EXCEPT BY SAFETY-KLEEN OR AS SAFETY-KLEEN MAY AGREE IN WRITING.
3. THIS DRAWING SUPERCEDES SAFETY-KLEEN DRAWINGS C10219 & C10961.
4. SEE INDIVIDUAL SERVICE CENTER PLANS FOR LOCATION OF THESE DETAILS.

REV.	DESCRIPTION	BY	CHKD	APPD
2	ADDED BALL VALVE	RD		
1	ADDED NOTE 1 & REFERENCED NOTES	W.J.		

TITLE: SOLVENT DISPENSER TREE INSTALLATION DETAILS

SAFETY-KLEEN CORP.

PROJ. ENG. APPR. | OPERATIONS APPR. | SCALE: AS SHOWN | DRAWN: NAO-GD | DATE: 2/2

BRANCH: FOR SERVICE CENTER BRANCH | DRAWING NO. D11223

B33 2/28/00 GD

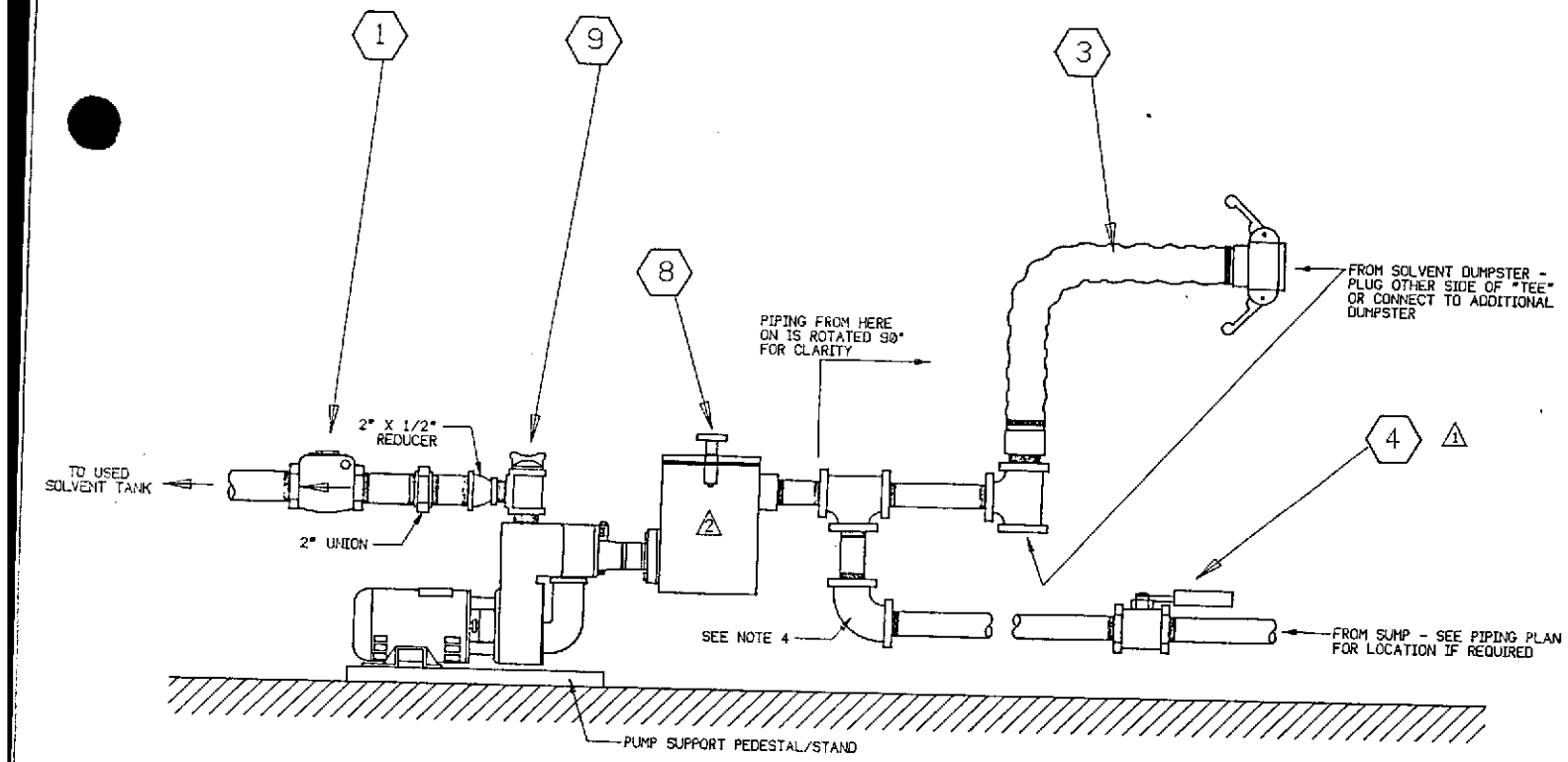

USED SOLVENT PUMP INSTALLATION

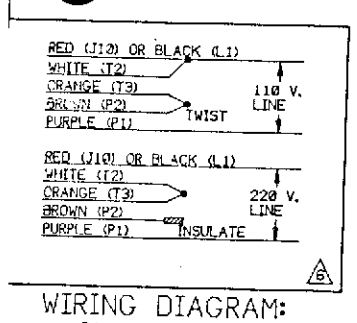

WIRING DIAGRAM: CLEAN PUMP

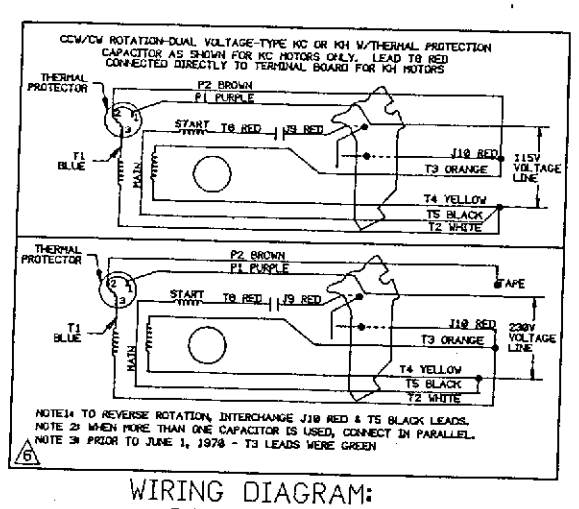

WIRING DIAGRAM: DIRTY PUMP

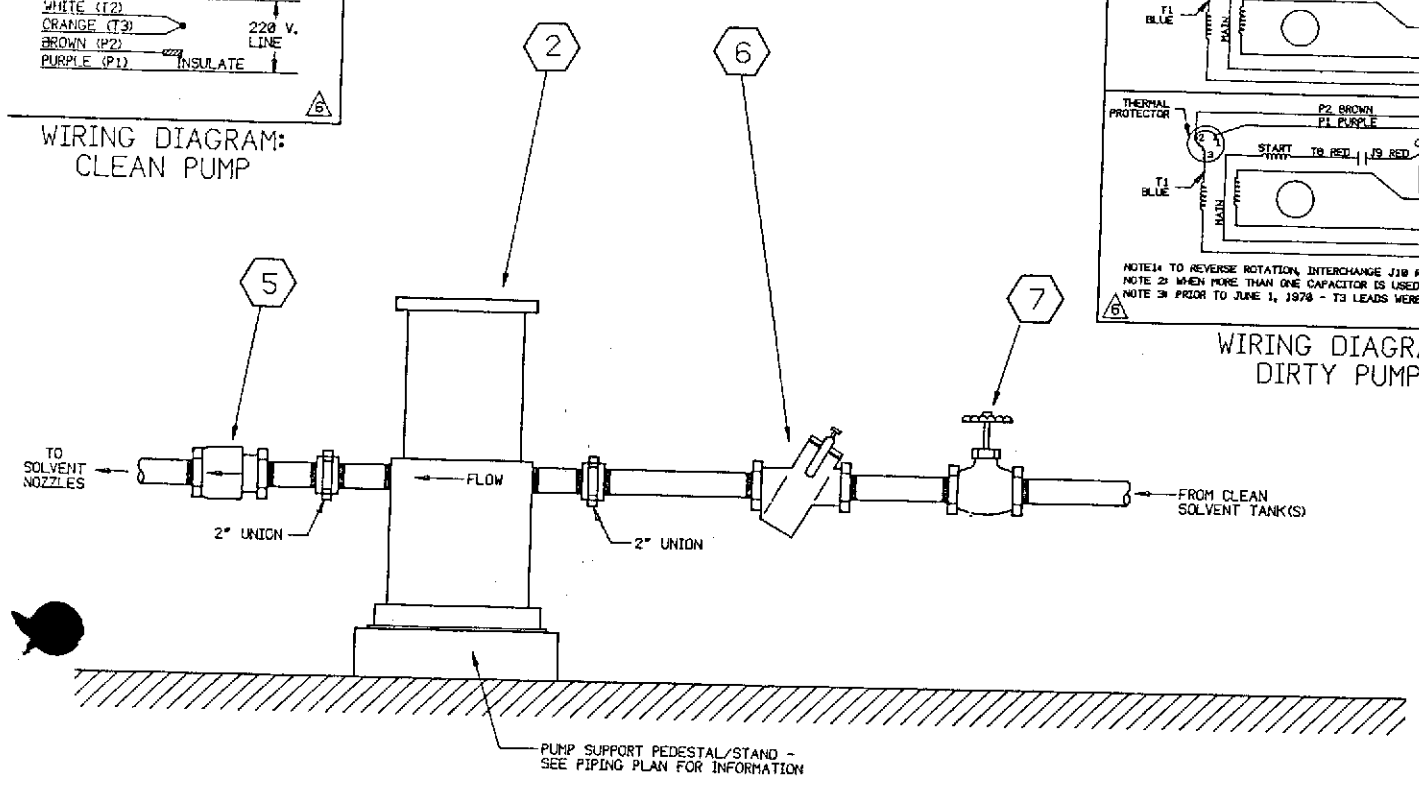

CLEAN SOLVENT PUMP INSTALLATION

EQUIPMENT / FIXTURE SCHEDULE

MARK	SIZE	DESCRIPTION	SK PART NO.	REMARKS
1	2"	2" BRONZE CHECK VALVE - MORRISON BROS. FIG. 246-A	5288	
2	2"	2" MARLOW PUMP - 20 EVP 10A 1 HP EXPLOSION PROOF MOTOR W/JUNCTION BOX - VITON FITTED	5240	SEE SPECIFICATION DETAILS ON SAFETY-KLEEN DWG. A11118 BELOW
3	2"	2" DUMPSTER HOSE ASSEMBLY	5234	SEE SAFETY-KLEEN DWG. D10452 FOR DETAILED INFORMATION
△1 4	2"	2" APOLLO BALL VALVE, BRONZE BODY W/STAINLESS STEEL BALL & TRIM. TEFLON SEALS & CONBRACO SPRING LOADED SELF CLOSING DEADMAN HANDLE	5272	
5	2"	2" BACK PRESSURE VALVE VERTICAL TYPE WITH 6 PSI SPRING SETTING - MORRISON BROS. FIG. 158-B/PR (15 P.S.I. OPEN)	5268	FOR ABOVEGROUND TANK INSTALLATION ONLY
6	2"	2" LINE STRAINER W/TOP CLEAN-OUT W/#20 MESH MORRISON BROS. FIG. 286	5269	
7	2"	2" BRONZE GATE VALVE MORRISON BROS. FIG. 235	5236	
△2 8	2"	2" MARLOW SUCTION STRAINER ASSEMBLY MODEL 2B10X W/STAINLESS STEEL BASKET W/#10 PERFORATIONS	5313	FLANGED DISCHARGE PORT OF STRAINER SERVES AS UNION ON SUCTION SIDE OF PUMP
9	1 1/2"	1 1/2" MARLOW PUMP - 1 1/2HR49EC, SINGLE PHASE, EXPLOSION PROOF, BUNA FITTED, SELF PRIMING CENTRIFUGAL	5330	SEE DETAIL BELOW LEFT

PUMP UNITS WITH OPEN MOTORS
1 1/2HR49EC

DWGS BASED ON "AQ SMITH" MOTORS

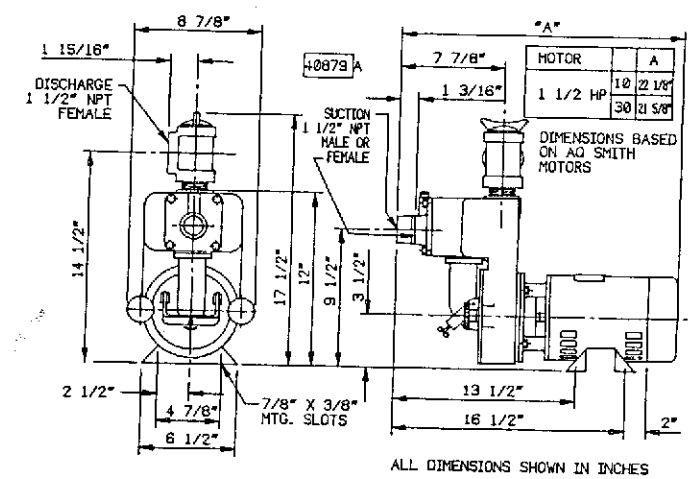

THESE DIMENSIONS NOT TO BE USED FOR CONSTRUCTION PURPOSES WITHOUT FORMAL FACTORY APPROVAL.

ALL DIMENSIONS SHOWN IN INCHES

FOR FIELD USE ONLY

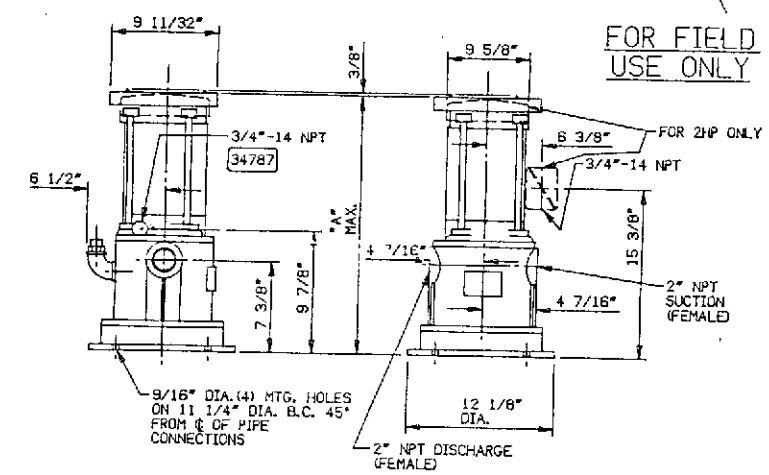

GENERAL NOTES

1. MODEL TO BE USED BY SAFETY-KLEEN CORP. - MODEL 20 EVP-10A, 1 HP - 2" WITH EXPLOSION PROOF MOTOR W/JUNCTION BOX & VITON FITTED, SINGLE PHASE 60 CYCLE 115/230V.
2. SEE INDIVIDUAL SERVICE CENTER SITE PLANS FOR LOCATION OF THE INSTALLATION.

S-K PART NO.	G.E. EXPL. PROOF MOTORS				
	HP	PHASE	CYCLE	A	
5240		1	60	20 13/32"	115/230

GENERAL NOTES

1. THIS DRAWING SUPERCEDES SAFTY-KLEEN CORP. DRAWING A1118
2. SEE INDIVIDUAL SERVICE CENTER SITE & PIPING PLANS FOR LOCATIONS & ARRANGEMENT OF THESE DETAILS.
3. FOR UNDERGROUND TANK INSTALLATIONS, A 90° CHECK VALVE MORRISON BROS. FIG. 137 OR APPROVED EQUAL SHOULD BE INSTALLED AT TOP OF TANK ON CLEAN PUMP SUCTION LINE (CLEAN TANKS ONLY).
4. △2 ALL PIPING TO BE 2" SCHEDULE 40 GALVANIZED UNLESS OTHERWISE SPECIFIED. ALL CHANGES OF DIRECTION IN DIRTY SOLVENT PIPING TO BE ACCOMPLISHED USING EITHER (2)-45° ELBOWS OR (1)-LONG RADIUS 90° ELBOW.
5. THIS DRAWING CONTAINS INFORMATION PROPRIETARY TO SAFETY-KLEEN CORP. ANY REPRODUCTION, DISCLOSURE OR USE OF THIS DRAWING IS EXPRESSLY PROHIBITED EXCEPT BY SAFETY-KLEEN OR AS SAFETY-KLEEN MAY AGREE IN WRITING.
6. △4 ALL ITEMS WITH SAFETY-KLEEN PART NO. REFERENCES WILL BE SUPPLIED TO CONTRACTOR.

FIGURE II.C.2-3(b)

NO.	DESCRIPTION	BY	CHKD	APPR	DATE
6	ADDED W.D.'S FOR CLEAN & USED PUMPS	RD			8/1
5	ADDED NEW PUMP FOR DIRTY SOLVENT TO VIEW & TABLE; ADDED PUMP SPEC.'S	RD			4/1
4	ADDED NOTE 6	WLJ			8/
3	ADDED PUMP SPECS - DWG A11118	WLJ			5/
2	ADDED ITEM (8) & ADDED TO NOTE (4)	WLJ			3/2
1	CHANGED ITEM (4) TO NEW TYPE VALVE	WLJ			2/1

REVISIONS

TITLE: SOLVENT PUMP PIPING INSTALLATION DETAILS

SAFETY-KLEEN CORP.
777 BIG TIMBER ROAD, ELGIN, ILLINOIS 60123 PHONE 312/697-8400

PROJ. ENG. APPR.	OPERATIONS APPR.	SCALE	DRAWN	DATE
		NTS	NWD-FBG	2/24/

BRANCH CORP. DEPUTY | DRAWING NO.

MARK	QTY	SIZE	DESCRIPTION
K	4	6"	PORT HOLE
J	2		SIDE LIFT LUG
H	4		< 3"x3"x3\8"x3"LONG
G	2		LIFT LUG
F	2	4"	FULL COUPLING
E	3	4"	FULL COUPLING
D	4	4"	FULL COUPLING
C	1	4"	HALF COUPLING
B	1	24"	SHELL MANWAY (24 BOLT PATTERN)
A	1	24"	ROOF MANWAY W\12 EA. 1\2"x4" LONG SHOULDER BOLTS

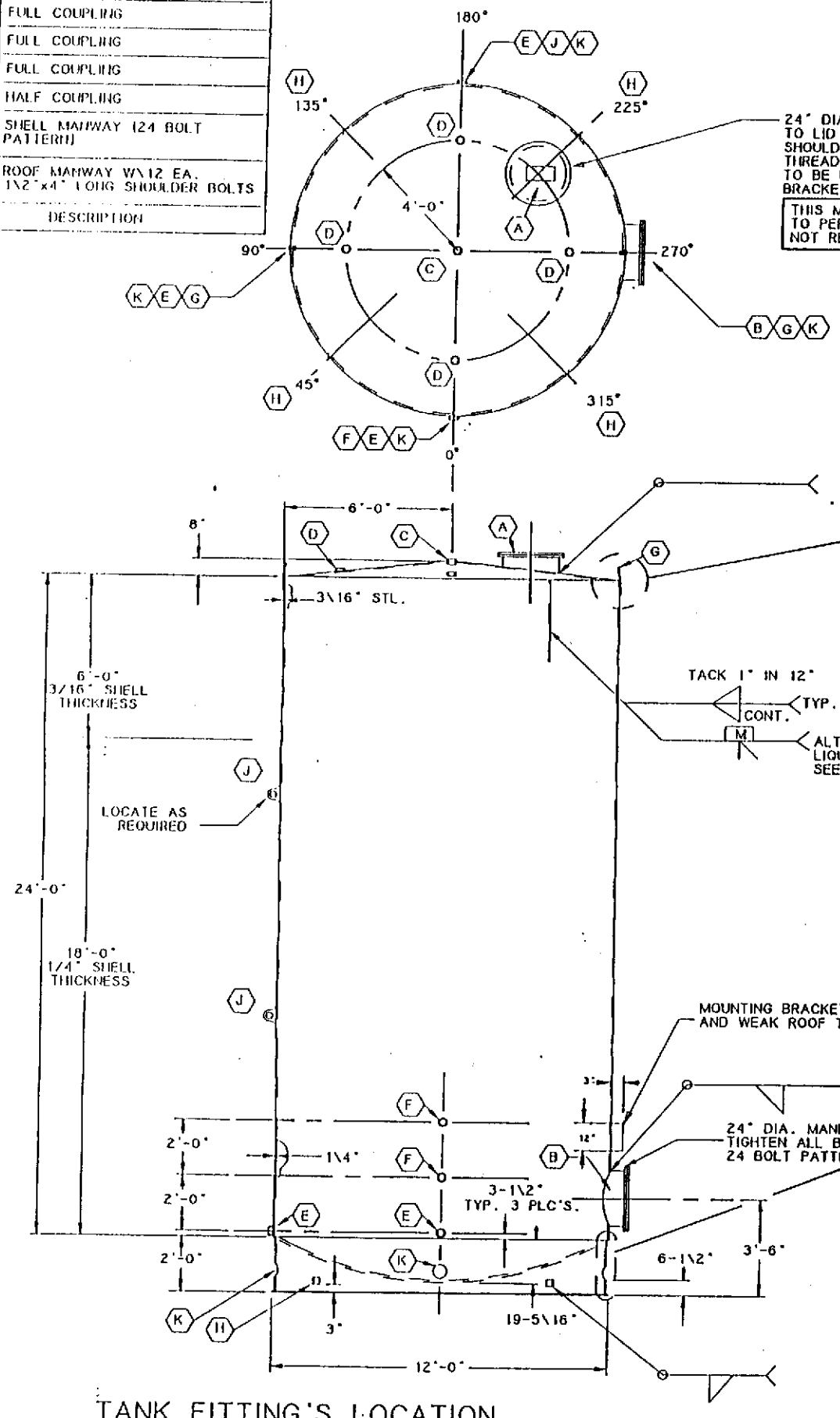

TANK FITTING'S LOCATION

SCALE: 3\8" = 1'-0"

24" DIA. MANHOLE W\GASKET CEMENTED TO LID ONLY. INSTALL USING (12)- 4" LONG SHOULDER BOLTS (EVERY OTHER BOLT HOLE) W\NUTS THREADED TO DEPTH OF NUTS ONLY. NO OTHER BOLTS TO BE USED. THE FOLLOWING LABEL TO BE MOUNTED TO BRACKET ON LID:

> THIS MANWAY IS PROVIDED WITH LONG BOLTS TO PERMIT EMERGENCY RELIEF VENTING. DO NOT REPLACE WITH SHORTER BOLTS.

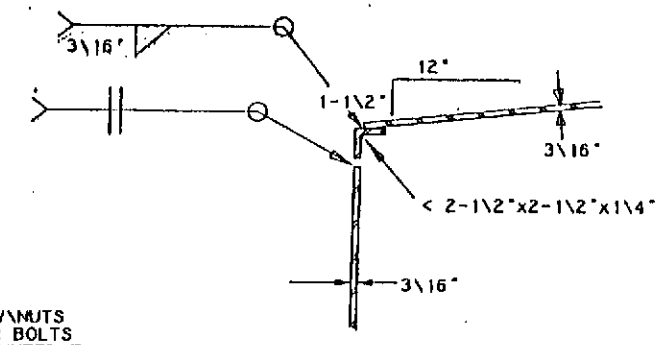

SHELL TO ROOF CONNECTION

SCALE: 1-1\2" = 1'-0"

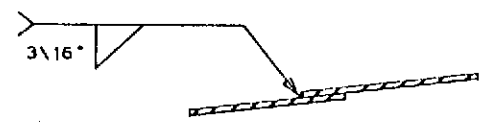

ROOF SEAM DETAIL

SCALE: 1-1\2" = 1'-0"

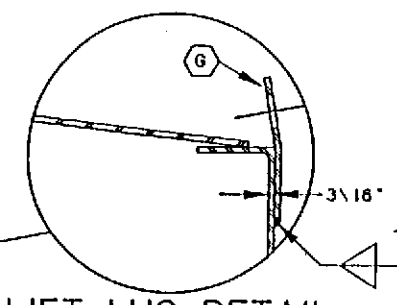

LIFT LUG DETAIL

SCALE: 1-1\2" = 1'-0"

ALT. NO. 2 JOINT WELD

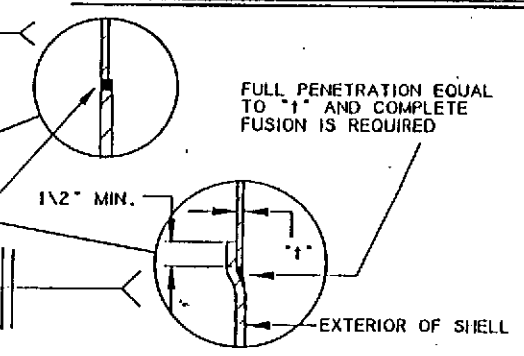

ALT. NO. 1 JOINT WELD

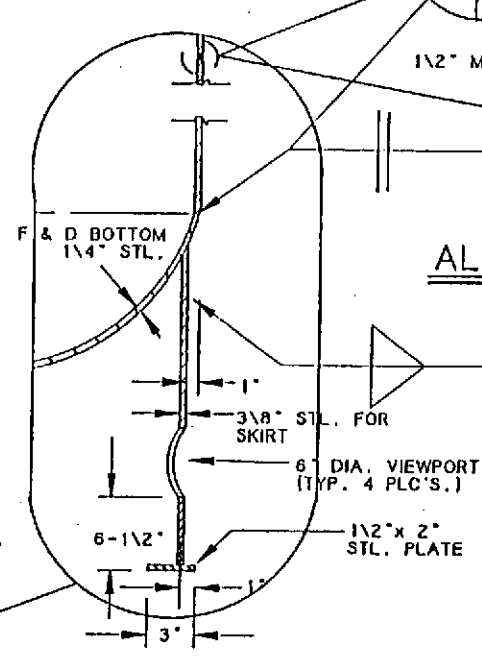

TANK SKIRT DETAILS

SCALE: 1-1\2" = 1'-0"

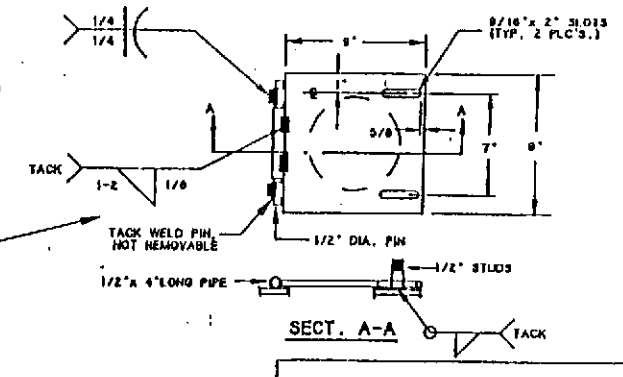

SECT. A-A

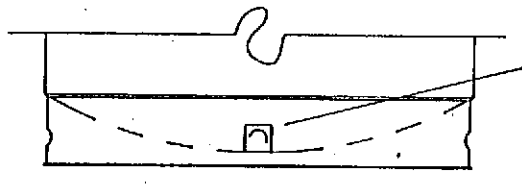

PORT HOLE COVER DETAILS

SCALE: 3\8" = 1'-0"

GENERAL NOTES

1) TEST PRESSURE TO BE 1-1\2 PSI AIR MIN. & 5 PSI MAX.

2) CONSTRUCTION TO MEET "UNDERWRITERS LABORATORIES" REQUIREMENTS AND BE SO LABELED

3) ALL PERTINENT SAFETY REGULATIONS, BOTH THE OWNER'S & "OSHA,S", SHALL BE ADHERED TO RIGIDLY. IN ADDITION, ALL SAFETY PRECAUTIONS NOTED ON THE MANFACTURER'S PRODUCT DATA SHEETS AND LABELS SHALL BE OBSERVED FOR BOTH MATERIAL AND EQUIPMENT.

4) INITALLY ALL SURFACES TO BE COATED SHALL BE PREPARED IN A WORKMANLIKE MANNER WITH THE OBJECTIVE OF OBTAINING A CLEAN, DRY AND PROPERLY PREPARED SUBSTRATE.

5) BEFORE ANY SURFACE IS COATED, IT SHALL BE CLEANED CAREFULLY OF ALL DUST, DIRT, GREASE, LOOSE RUST, MILL SCALE, OLD PAINT, ETC.

6) ALL COATINGS SHALL BE APPLIED IN A WORKMANLIKE MANNER TO ACHEVE THE SPECIFIED DRY MIL FILM BUILD, LEAVING A SMOOTH UNIFORM APPEARING FILM. SPRAY APPLICATION SHALL BE USED WHEREVER POSSIBLE.

7) THE APPLICATION SHALL LEAVE NO SAGS, BRUSH MARKS OR OTHER DEFECTS.

8) CLEAN-UP AND REMOVE ALL SAND AND DEBRIS FROM THE JOB WHEN COMPLETE.

9) SUPPORTING SKIRT SHALL BE PROTECTED BY MATERIALS HAVING A FIRE RESISTANCE RATING OF NOT LESS THAN 2 HRS. FIREPROOFING MATERIAL SHALL BE "ALBI CLAD 800", MANUFACTURED BY ALBI MFG., A DIVISION OF STAN CHEM, INC. OF EAST BERLIN, CT. OR APPROVED EQUAL BY THE OWNER. MATERIAL SHALL BE APPLIED IN STRICT ACCORDANCE WITH MFR'S. SPECIFICATIONS. FIREPROOFING SHALL BE INSTALLED IN FIELD BY OWNER

10) THE BOTTOM SHALL FLANGED & DISHED. THE DISH RADIUS SHALL EQUAL THE DIAMETER OF THE TANK & THE KNUCKLE RADIUS NOT BE LESS THAN 6% OF THE DIAMETER OF THE TANK.

PAINT SPECIFICATIONS

1) SURFACE PREPARATION:

COMMERCIAL BLAST CLEANING (MINIMUM) IN ACCORDANCE WITH Structures Painting Council Surface Preparation" SPECIFICATION SSPC-SP6. WITH A PROFILE OF 1.5 - 2.0 MILS

NOTE: MANUFACTURER'S INSTRUCTIONS MUST BE FOLLOWED WITHOUT EXCEPTION.

2) PRIMER COAT -- APPLIED SAME DAY:

APPLY ONE COAT "SHERWIN WILLIAMS ZINC CLAD III", 3-4 MILS 6-8 MILS WET. ALLOW TO DRY 24 HOURS. (ZINC CLAD III IS A EPOXY ZINC CONSISTING OF 3 PARTS: BINDER PART A #B69A3, CATALYST PART B #B69V13 AND ZINC DUST PART F #B69D11).

3) INTERMEDIATE COAT:

APPLY ONE COAT "SHERWIN WILLIAMS DTM" ACRYLIC GLOSS, B6 SERIES, COLOR NO. MC-64 SILVERY (LIGHT GREY) 3-4 MILS DRY 8-10 MILS WET. (THIS IS CONTRASTING COLOR TO FINISH COAT) ALLOW TO DRY OVERNIGHT.

4) FINISH COAT:

APPLY ONE COAT "SHERWIN WILLIAMS DTM" ACRYLIC GLOSS. B65W101 (WHITE) SERIES. 3-4 MILS DRY, 8-10 MILS WET IN SELECTED COLOR.

NOTE:

COATING SYSTEM I REQUIRES MINIMUM SURFACE AND MATERIAL TEMPERATURES OF 50° - 55°F FOR PROPER CURING/DRYING DO NOT APPLY OVER MOISTURE OF CONDENSATION.

Figure II.C.2-4(a)

NO.	DESCRIPTION	BY	CHKD	APVD
12	DWG. 8 WAS 01/07/93 ADDED NOTES RE: MANWAY MOUNTING	RD		
11	ADDED NOTES 3 THRU 6; ADDED PAINT SPEC. ADDITIONAL REQ. AND D. MARK 1	RD		
10	REVISED & REDRAWN ON COMPUTER	RD		
9	MISC. REVISIONS	CB		
8	ADDED NOTES	CS		
7	ADDED NOTES	CS		
6	ADDED NOTE 6	CS		
5	ADDED & CHANGED DETAILS, NOTES	RLB		
4	ADDED & CHANGED DETAILS; REMOVED NOTE 6	RLB		
3	ADDED DETAIL 'A' & NOTES 5 & 6	RD		
2	REVISED & REDRAWN	RD		
1	RMV'D. 12K - 15K GAL. REF.	RD		

REVISIONS

TITLE

20,000 GAL. 12'-0"
F. & D. TANK
FABRICATION DETAILS

SAFETY-KLEEN CORP.

ENGI. ENG. APPR.	OPERATIONS APPR.	SCALE	DRAWN	DATE
		AS NOTED	RD	

BRANCH: FOR BRANCH CONSTRUCTION OR IMPROVEMENT

DRAWING NO. 9010

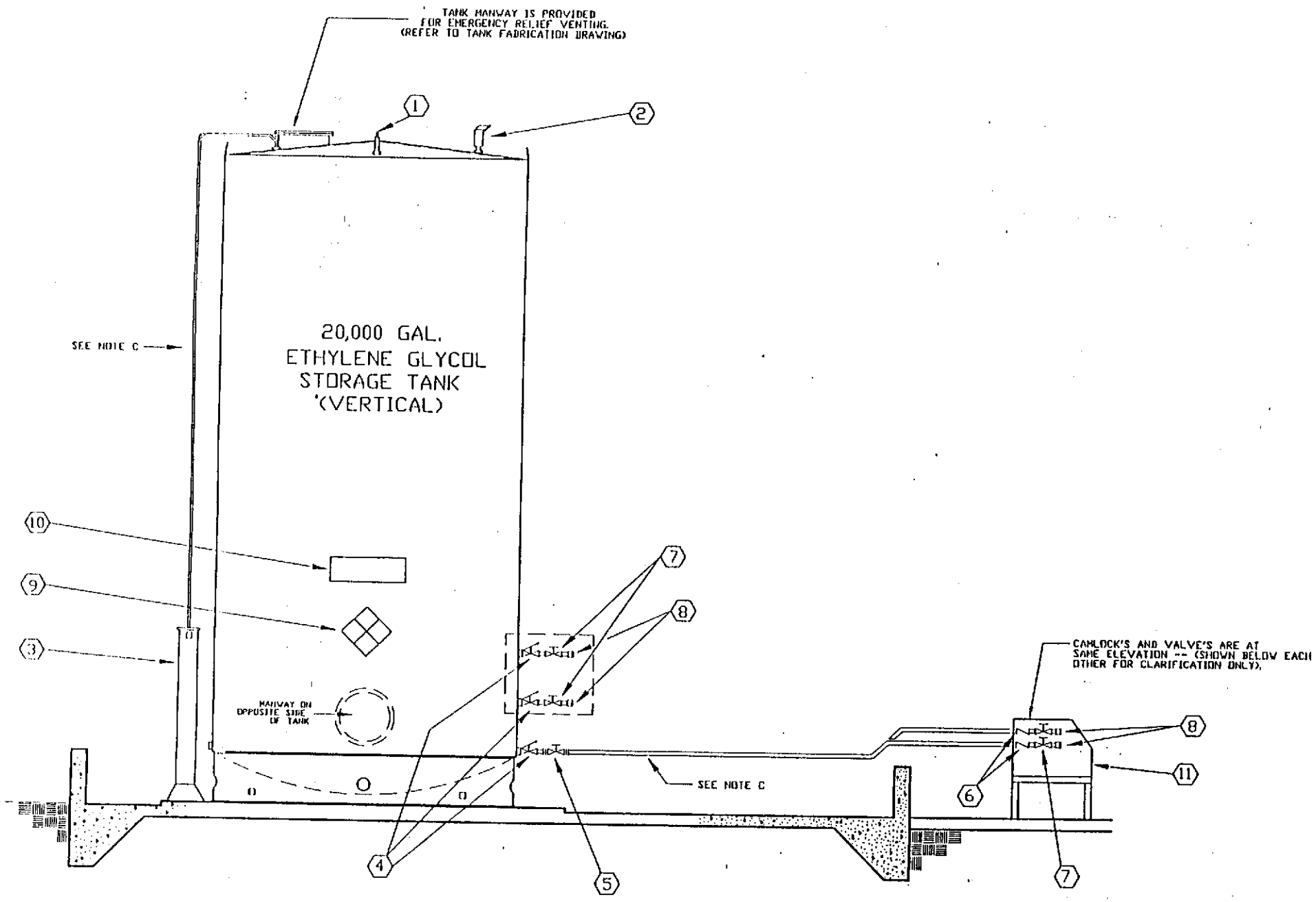

TANK PLUMBING ELEVATION

SCALE:3\8"=1'-0"

ITEM	SIZE	DESCRIPTION	S-K PART #	REMARKS
1	3\8"	3\8" AUTOMATIC VACUUM BREAKER MORRISON BROS. FIG. 1340-A	5274	———
2	3"	3" SCREWED PRESSURE\VACUUM VENT MORRISON BROS. FIG. 948 (2 oz. PRESSURE - 1 oz. VACUUM)	5339	———
3	——	TANK GAUGE - MOORMANN BROS. MODEL NO. 7S	5277	SEE INSTALLATION DETAILS ON SAFETY-KLEEN DRAWING A10243
4	3"	3" INTERNAL EMERGENCY VALVE MORRISON BROS. FIG. 272-HO WITH 212°F FUSIBLE LINK	5267	SEE INSTALLATION DETAILS ON SAFETY-KLEEN DRAWING C11302
5	3"	3" DUCTILE IRON GATE VALVE WITH ROUND FLANGED ENDS - MORRISON BROS. FIG. 234-DI	5276	SEE INSTALLATION DETAILS ON SAFETY-KLEEN DRAWING C11302
6	3"	3" BRONZE CHECK VALVE - MORRISON BROS. FIG. 246-A	5266	———
7	3"	3" BRONZE GATE VALVE - MORRISON BROS. FIG. 235-B (LOCKING TYPE)	5265	———
8	3"	3" ALUMINUM CAMLOCK QUICK-COUPLING MORRISON BROS. MALE ADAPTER PART F WITH DUST CAP & CHAIN	5264	———
9	——	N.F.P.A. MATERIAL IDENTIFICATION CARD	——	DISPLAY IN PLAIN SIGHT ABOVE DIKE WALL AS SHOWN
10	——	'COMBUSTIBLE - KEEP FIRE AWAY' SIGN	——	DISPLAY IN PLAIN SIGHT ABOVE DIKE WALL AS SHOWN
11	——	SECONDARY CONTAINMENT - TANK ACCESS CONTAINER	——	SEE INSTALLATION DETAILS ON SAFETY-KLEEN DRAWING D13479

(A) FOR ANY TANK VOLUMETRIC CONTAINMENT\DISPLACEMENT CALCULATIONS REFER TO ACTUAL SERVICE CENTER TANKFARM DRAWING'S.

(B) SEE INDIVIDUAL SERVICE CENTER SITE PLANS FOR LOCATION OF DIKE AND RELATED INFORMATION. SEE TANKFARM PLAN(S) FOR TANK ARRANGEMENT AND PIPING DETAILS

(C) ALL PIPING TO BE SCHEDULE 40 GALVANIZED AND BE SUPPORTED EVERY EIGHT (8) RUNNING FEET. CONTRACTOR TO SUPPLY ALL BRACKET'S, CLAMPS, ETC. AS REQUIRED FOR SUPPORTING PIPE.ALL EXPOSED PIPE THREADS AT JOINTS TO BE PAINTED WITH A RUST RESISTANT EXTERIOR GARDE GALVANIZING PAINT.PIPING SUPPORT HARDWARE TO BE UNISTRUT BRAND OR APPROVED EQUIVALENT

(D) ALL DIRECTION CHANGES IN WASTE OIL LINES TO BE MADE USING A COMBINATION OF 45° ELBOWS OR LONG RADIUS 90° ELBOWS.

(E) IF THIS INSTALLATION IS TO BE MADE IN A FREEZE PRONE LOCATION REFER TO SAFETY-KLEEN DRAWING C11302 FOR DETAILS.

(F) ALL ITEMS SHOWN WITH SAFETY-KLEEN PART # REFERENCES WILL BE SUPPLIED TO AND INSTALLED BY CONTRACTOR.

Figure II.C.2-4(b)

NO.	DESCRIPTION	BY	CHKD	APPR

REVISIONS

TITLE

ETHYLENE GLYCOL STORAGE TANK PLUMBING INSTALLTION DETAILS

SAFETY-KLEEN CORP.

777 BIG TIMBER ROAD ELGIN, ILLINOIS 60123 PHONE 708/697-8460

PROJ. ENG. APPR.	PERATIONS APPR.	SCALE	DRAWN	DATE
		3\8"=1'-0"		

THIS MANHOLE IS PROVIDED WITH LONG BOLTS TO PERMIT EMERGENCY RELIEF VENTING. DO NOT REPLACE WITH SHORTER BOLTS.

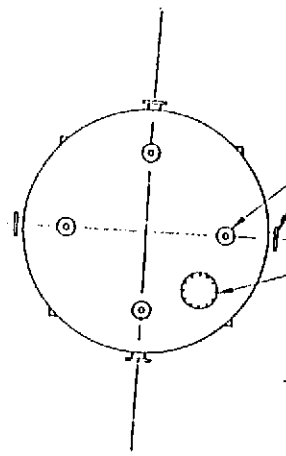

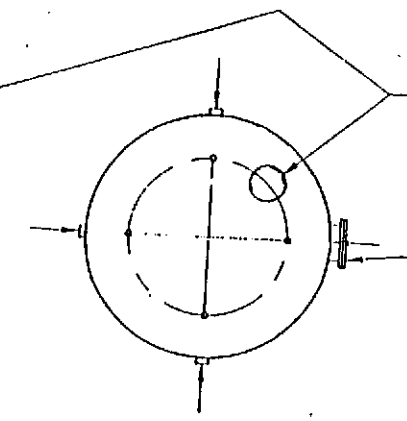

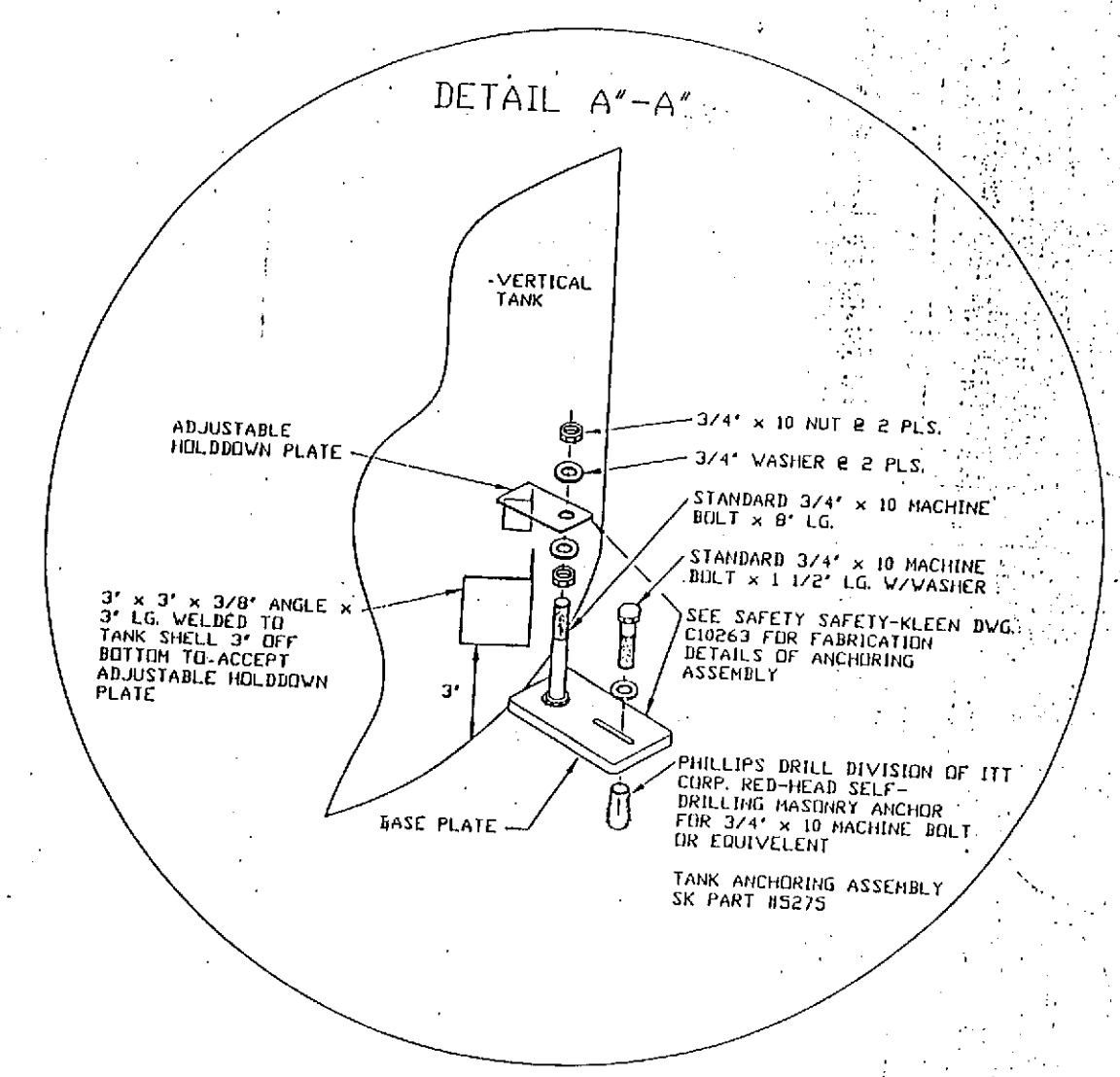

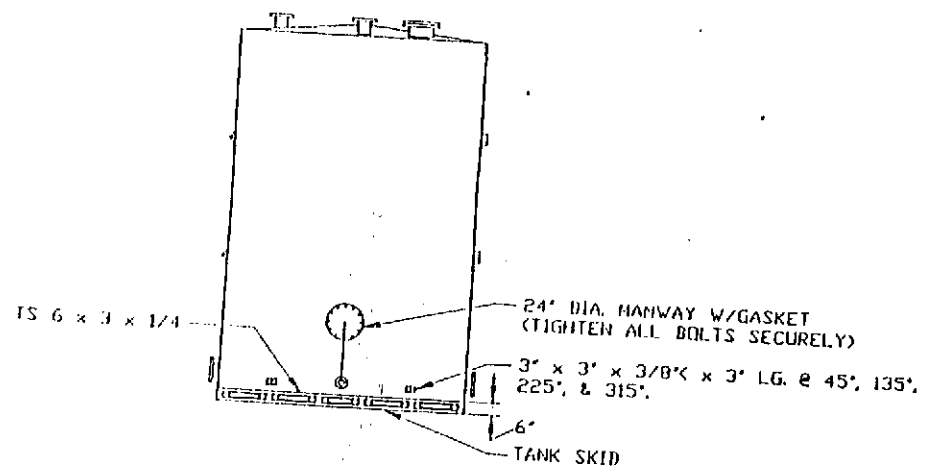

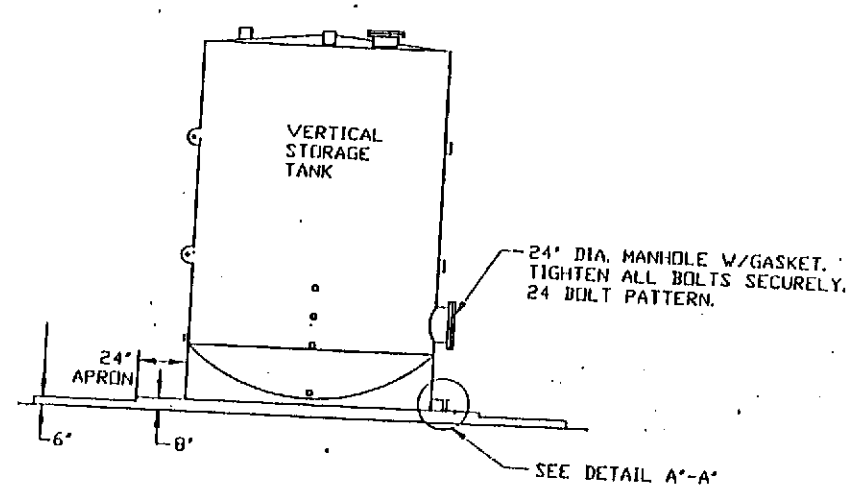

GENERAL NOTES

1. INSTALLATION OF ANCHORING ASSEMBLY REQUIRES THAT A 3" x 3" x 3/8" ANGLE (3" LG.) BE WELDED TO THE TANK SHELL 3" OFF BOTTOM @ 4 PLACES 90° APART AS SHOWN IN VIEW ABOVE. AFTER ANGLE HAS BEEN ATTACHED BE SURE TO RETURN TANK TO IT'S ORIGINAL CONDITION i.e. PRIME AND PAINT WELDED AREA.

2. SAFETY-KLEEN WILL PROVIDE 4 ANCHORING ASSEMBLIES PER TANK OR DRAWINGS OF FABRICATION DETAILS FOR LOCAL FABRICATION.

3. LOCATE & MARK MASONRY ANCHOR LOCATION THROUGH SLOTTED HOLES IN BASE PLATE ANCHORING ASSEMBLY THEN REMOVE ANCHORING ASSEMBLY & INSTALL SELF DRILLING MASONRY ANCHOR IN EACH OF THE 4 MARKED LOCATIONS FOR EACH TANK.

4. REPOSITION ANCHORING ASSEMBLY & BOLT TO ANCHOR IN CONCRETE & ADJUST THE HOLD DOWN PLATE FOR A SNUG FIT ON TANK ANGLE CATCH.

THIS DOCUMENT HAS BEEN PREPARED AND IS APPROVED BY ME FOR INCLUSION IN ENVIRONMENTAL PERMIT APPLICATIONS ONLY. IT IS NEITHER APPROVED NOR IS IT TO BE USED FOR CONSTRUCTION PURPOSES.

Figure II.C.2-4(c)

NO.	DESCRIPTION	BY	CHK	APVD	DATE
	REVISIONS				

TITLE

ABOVE GROUND VERTICAL TANK ANCHORING ASSEMBLY DETAILS

SAFETY-KLEEN CORP.

Figure II.C.2-4(

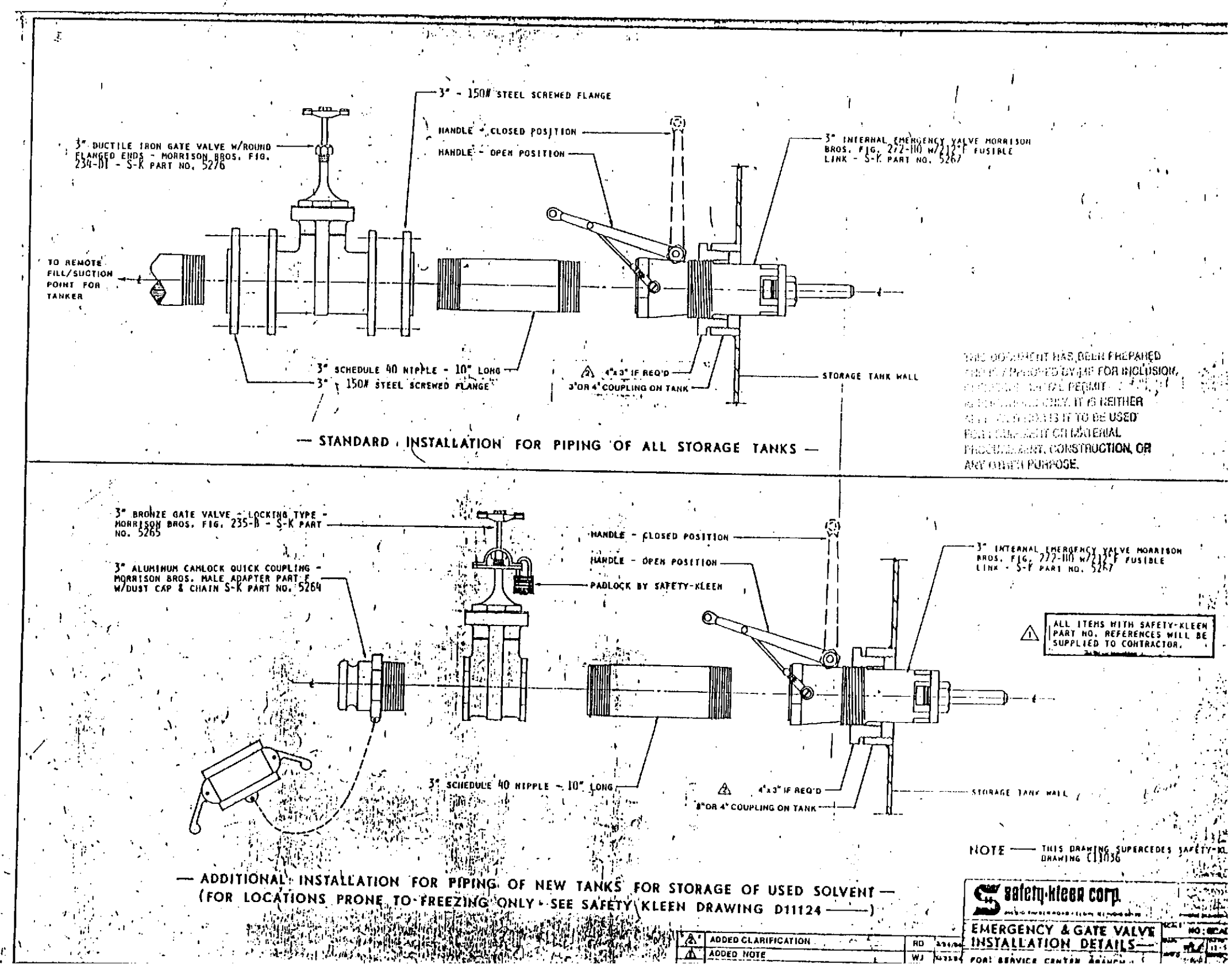

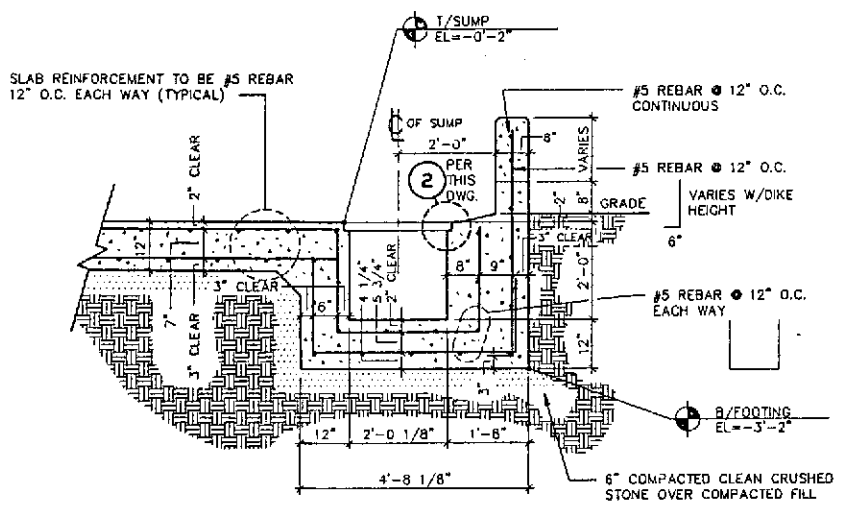

A TANKFARM SUMP SECTION

SCALE: 1/2" = 1'-0"

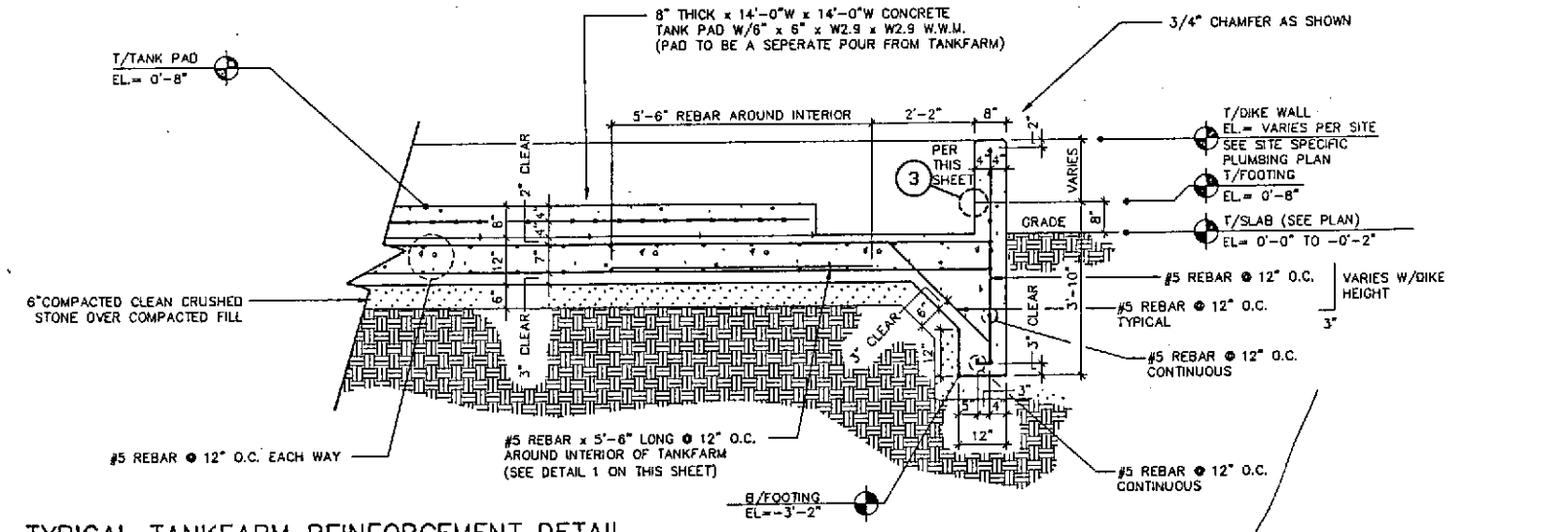

B TYPICAL TANKFARM REINFORCEMENT DETAIL

SCALE: 1/2" = 1'-0"

GENERAL NOTES

1.) PRIOR TO PLACEMENT OF REINFORCING STEEL, THE CONTACT SURFACE WILL HAVE ALL LOOSE MATERIALS REMOVED.

2.) ALL REBAR TO BE EPOXY COATED.

3.) ALL REBAR TO BE GRADE 60 BILLET STEEL CONFORMING TO ASTM-615 SPECIFICATIONS.

4.) MINIMUM CONCRETE COVER FOR REINFORCEMENT TO BE 3" FOR CONCRETE CAST AGAINST SOIL, AND TO BE 2" FOR CONCRETE EXPOSED TO WEATHER.

5.) SUMP TO BE TESTED BY CONTRACTOR WITH WATER AT FULL HEIGHT FOR A PERIOD OF 24 HOURS WITH NO LEAKAGE ALLOWED. THIS TEST IS TO BE CONDUCTED BEFORE AND AFTER INSTALLATION.

NOTE:
FOR PUMP BASE PLACEMENT SEE SITE SPECIFIC TANKFARM PLUMBING PLAN.

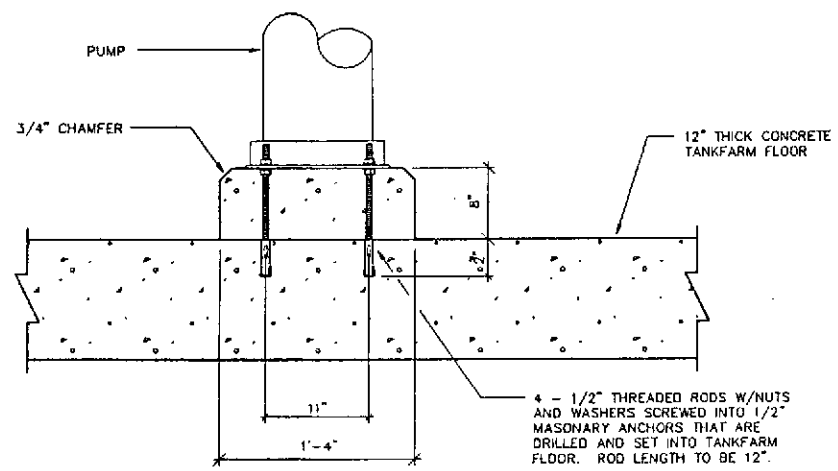

C TANKFARM PUMP BASE SECTION

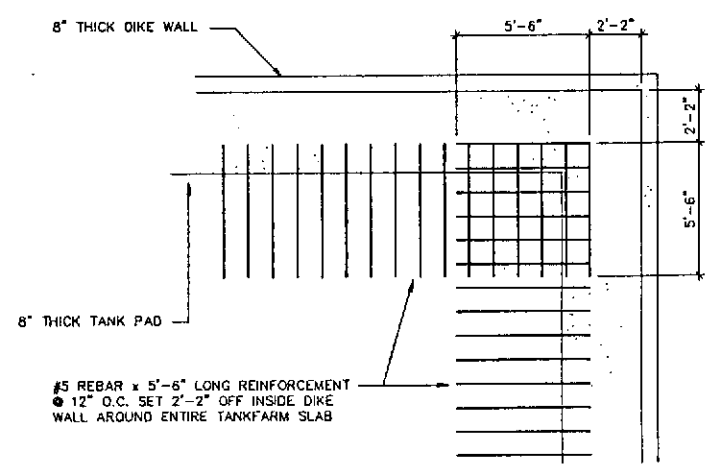

1 TANKFARM REINFORCEMENT DETAIL

SCALE: 1/4" = 1'-0"

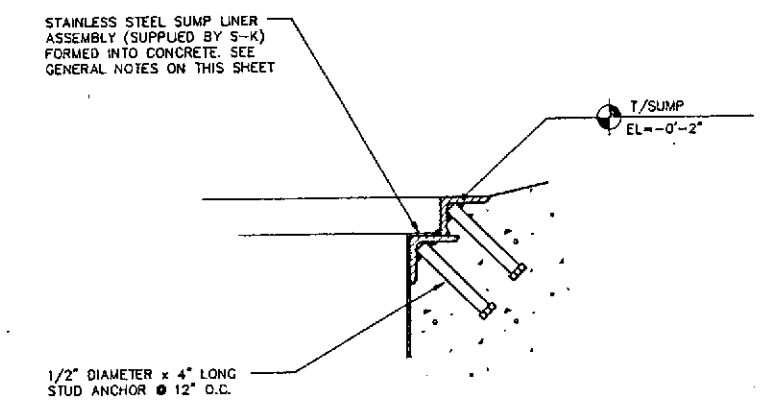

2 TANKFARM SUMP DETAIL

SCALE: 3" = 1'-0"

FORM A 1/4" WIDE x 1" DEEP SLOT AROUND INSIDE PERIMETER OF DIKE WALL. FILL SLOT WITH CONTINUOUS 3/8" DIAMETER CLOSED CELL POLYETHYLENE "BACKER ROD" ROPE AND 1/4" TO 1/2" THICK LAYER OF CHEMICALLY RESISTANT SEALANT. (SONNEBORNE NP-1 SONOLASTIC OR APPROVED EQUAL)

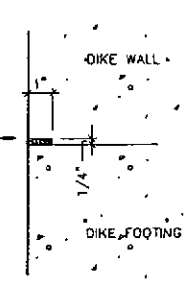

3 DIKE WALL TO FOOTING DETAIL

SCALE: 3" = 1'-0"

NO.	DESCRIPTION	BY	CHK	APPR	DATE

REVISIONS

FIGURE II.C.2-4(e)

TITLE
TANKFARM SECTIONS/DETAILS

SAFETY-KLEEN CORP.
777 BIG TIMBER ROAD ELGIN, ILLINOIS 60123 PHONE 708-697-8460

SCALE	BY	CHKD	P.E. APPR	OP. APPR	DATE
AS SHOWN	JHD	-	-	WDH	11-6-99

SERVICE CENTER STANDARDS
MEDLEY (MIAMI), FL.

STD-DWG-REV NO.
309702-5001-00

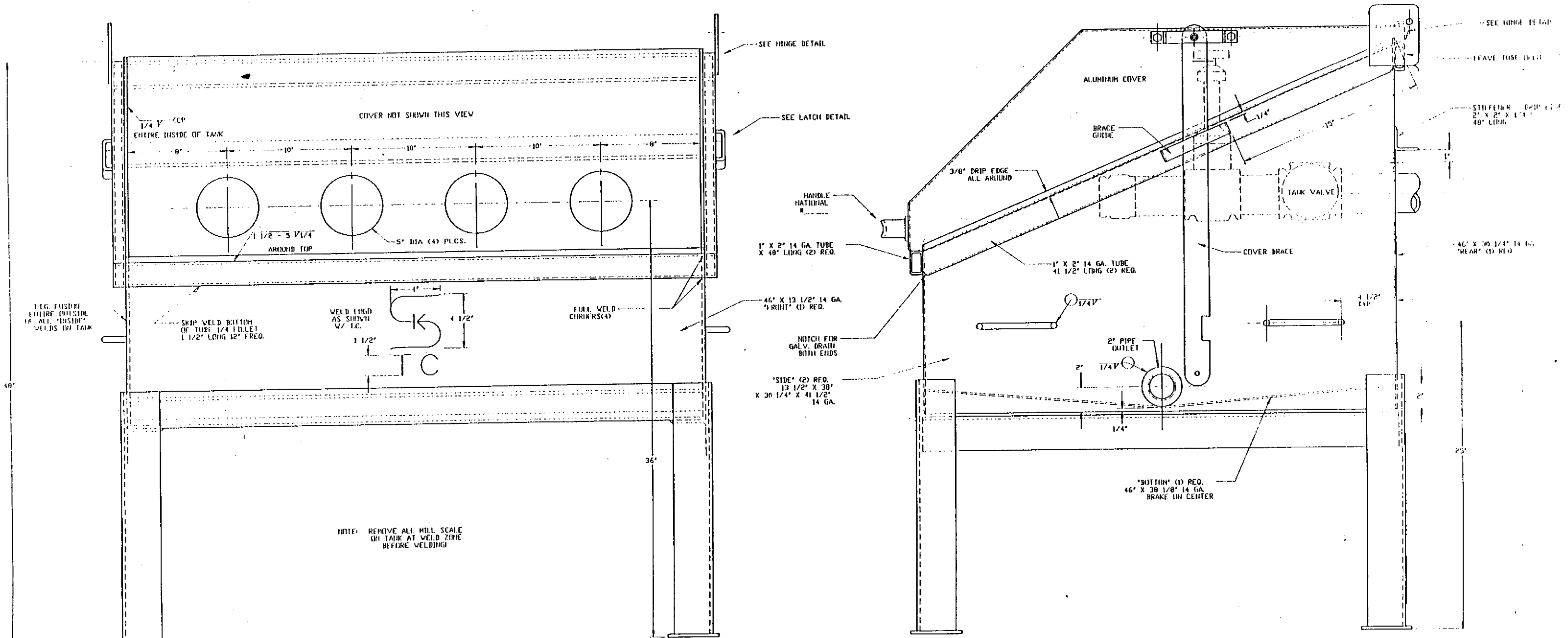

NOTE: TANK MUST BE DESLAGGED AND MECHANICALLY DEBURRED.
DEGREASE TANK BEFORE PICKELING AND HOT DIP
GALVANIZING A 123 A.S.T.M.

FIGURE II.C.2-4(f)

GENERAL NOTES

THIS DRAWING CONTAINS INFORMATION PROPRIETARY TO SAFETY-KLEEN CORPORATION. ANY REPRODUCTION, DISCLOSURE OR USE OF THIS DRAWING IS EXPRESSLY PROHIBITED EXCEPT BY SAFETY-KLEEN OR AS SAFETY-KLEEN MAY AGREE IN WRITING.

NO.	DESCRIPTION	BY	CHK	APPR	DATE

REVISIONS

TITLE
TANK ACCESS CONTAINER
(GALV.)

SAFETY-KLEEN CORP.
777 BIG TIMBER ROAD ELGIN, ILLINOIS 60123 PHONE 708 697-8460

SCALE	BY	CHKD	P.E. APPR	CO. APPR
1/4"=1'-0"	KD			

SERVICE CENTER STANDARDS: FABRICATION
STD. DWG NUMBER: D13479
REV: 0

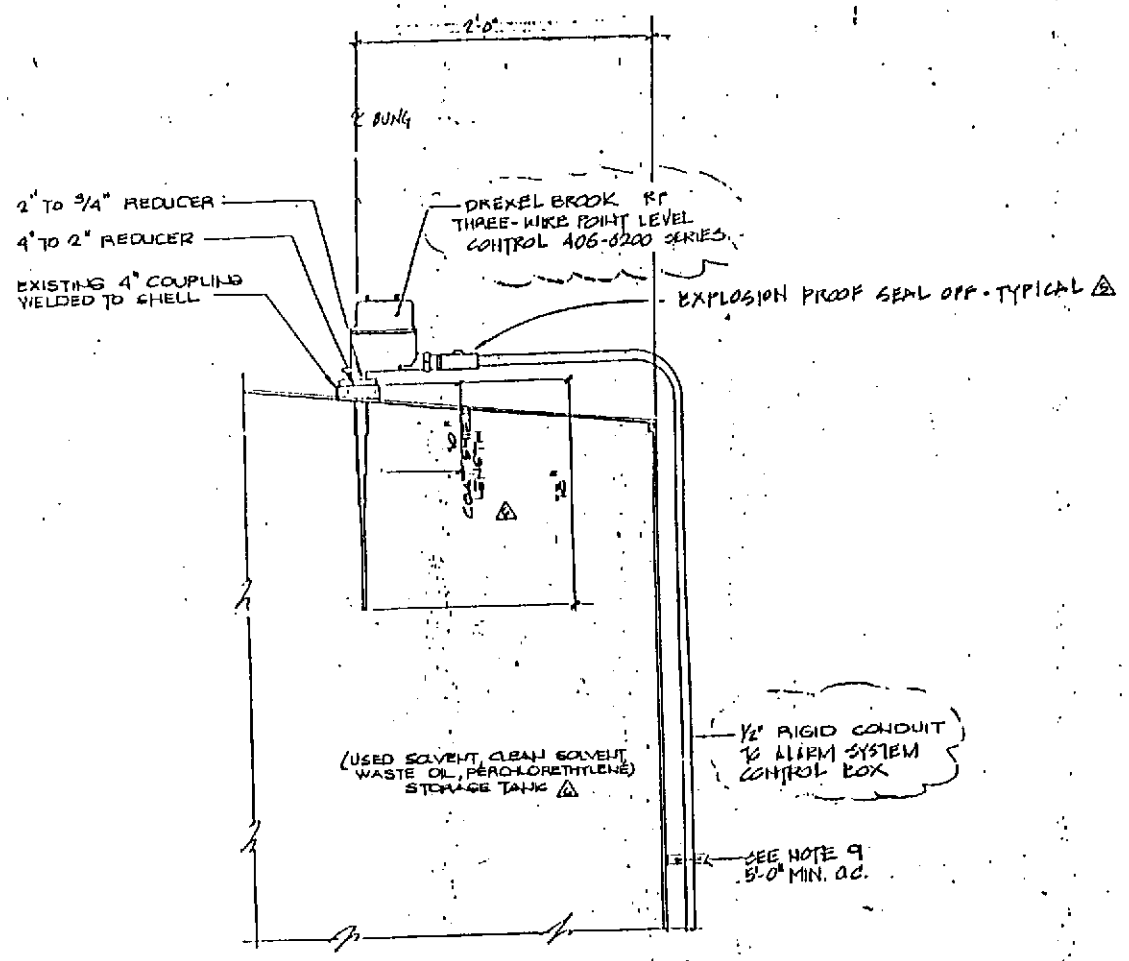

ABOVEGROUND VERTICAL TANK INSTALLATION

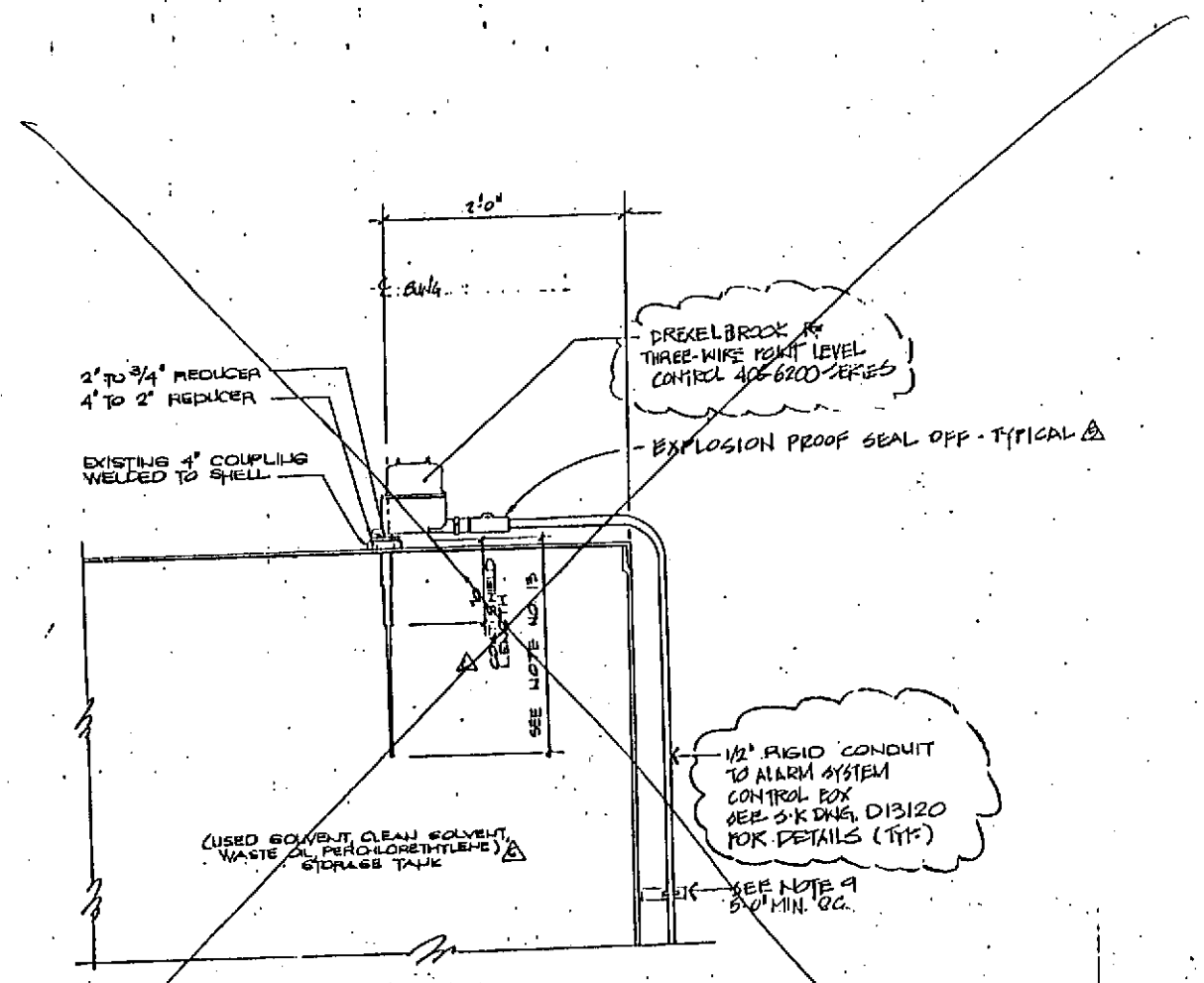

ABOVEGROUND HORIZONTAL TANK INSTALLATION

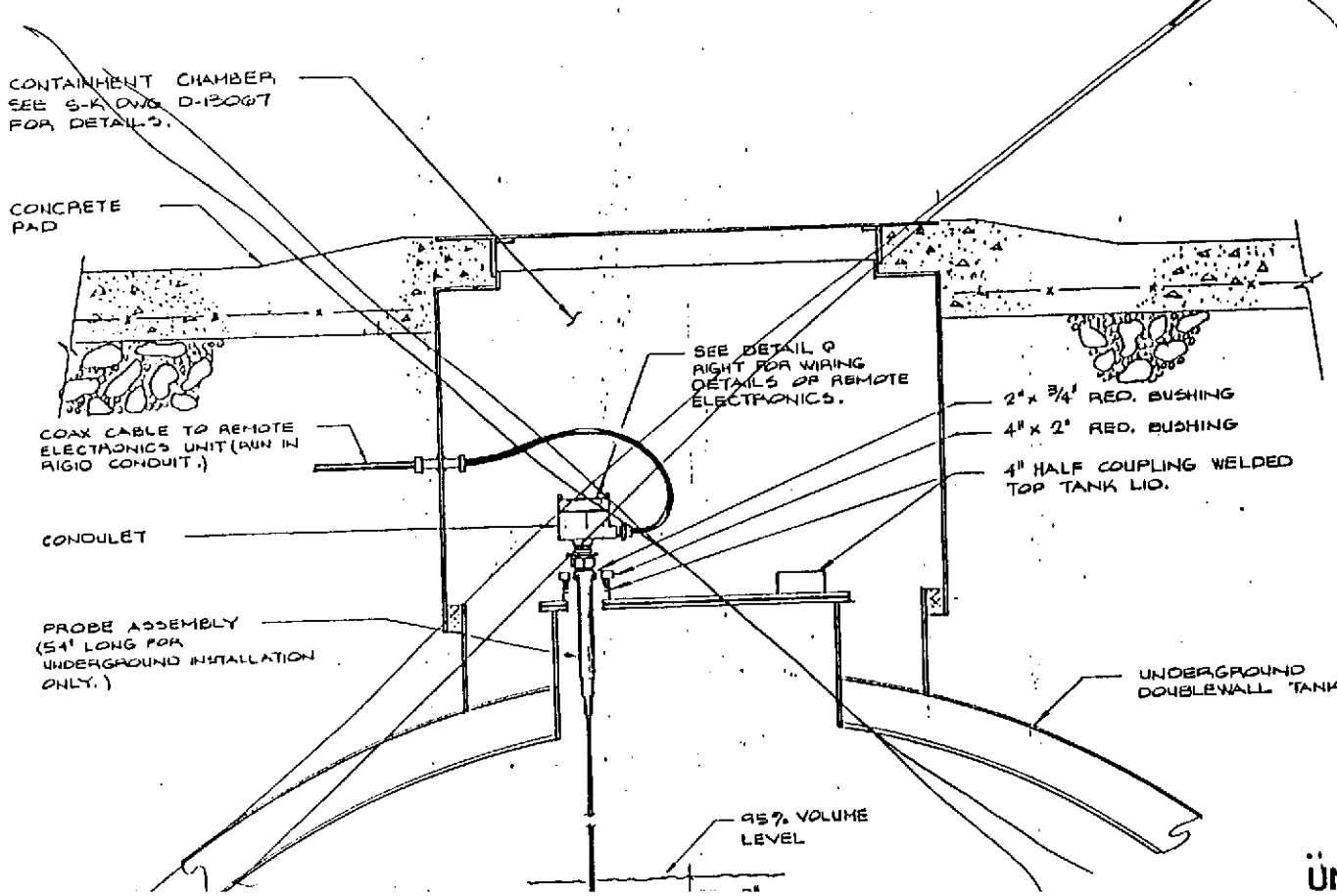

UNDERGROUND TANK INSTALLATION

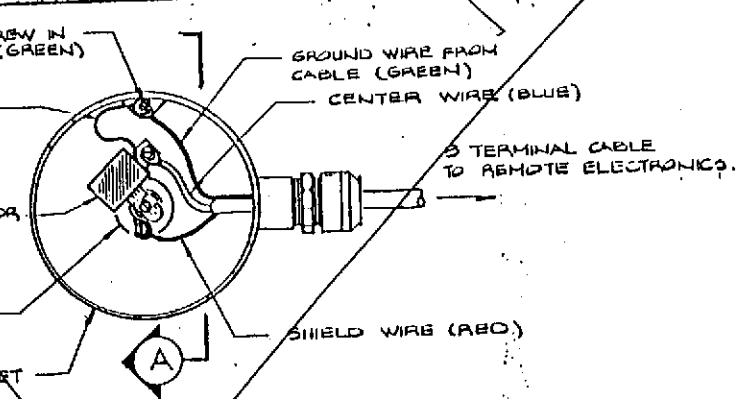

WIRING DETAIL
PLAN VIEW

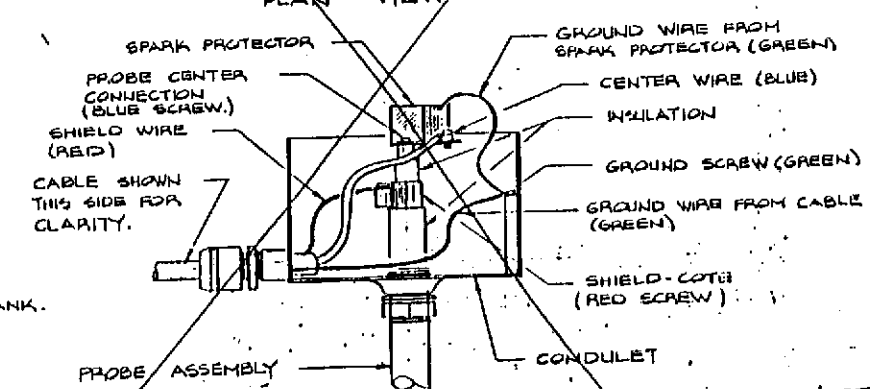

SECTION A

NOTE:
WORK THIS DWG. WITH SK. DWGS D-13929 AND D-14218

GENERAL NOTES

1. POWER REQUIREMENT 13 TO 28 VDC
2. OUTPUT 4 - 10 m (ALARM STATE)
   15 - 25 m (NORMAL STATE)
3. OPERATING TEMP. -40°F TO +140°F
4. SHIELD-TO-GROUND LOADING: 25 ohm MIN. RESISTANCE
5. RFI EFFECT: LESS THAN 2 pF SHIFT IN OPERATING POINT FOR UNIT IN EXPLOSION-PROOF HOUSING FROM 3 W FIELD @ 27, 150, OR 450 mHz AT A DISTANCE OF 3 FT. FROM EXPOSED CABLE OR SIGNAL WIRE.
6. FAIL-SAFE: SWITCHABLE OR EITHER LOW-LEVEL FAIL-SAFE (LLFS) OR HIGH-LEVEL FAIL SAFE (HLFS).
7. HOUSING: NEMA 12-WATERPROOF EXPLOSION PROOF FOR CLASS I GROUPS A, B, C, D, AND CLASS II GROUPS E, F, G DIV. 1 OR 2.
8. SEE INDIVIDUAL SERVICE CENTER SITE PLANS FOR RELATIVE LOCATIONS OF THESE DETAILS.
9. CONTRACTOR TO SUPPLY & INSTALL CONDUIT SUPPORTS & BRACKETS AS REQUIRED.
10. THIS DRAWING CONTAINS INFORMATION PROPRIETARY TO SAFETY-KLEEN CORP. ANY REPRODUCTION, DISCLOSURE OR USE OF THIS DRAWING IS EXPRESSLY PROHIBITED BY SAFETY-KLEEN
11. ALL ITEMS SHOWN WITH A SAFETY-KLEEN PART NUMBER WILL BE SUPPLIED BY SAFETY-KLEEN CORP. (e.g. SK-- - - - -)
12. IF INDIVIDUAL SERVICE CENTER CONDITIONS ARE NOT COVERED BY DETAILS SHOWN HERE, PLEASE CONTACT TECHNICAL SERVICES AT THE CORPORATE OFFICE FOR ASSISTANCE.
13. CALCULATIONS FOR LENGTH OF PROBE INSIDE OF TANK ARE SET TO ACTIVATE THE ALARM AT THE 95% VOLUME LEVEL.
14. ALL CALIBRATION OF UNIT SHALL BE DONE IN ACCORDANCE WITH DREXELBROOK'S RECOMMENDATIONS. CALIBRATION SHALL BE DONE AFTER ALL COMPONENTS OF SYSTEM ARE IN PLACE.
15. ALL TANKS SHALL BE GROUNDED PRIOR TO INSTALLATION OF ALARM SYSTEM.

Figure II.C.2-5(a)

1 REDRAW UNDERGROUND INSTALLATION ADDED DETAILS & CHANGED CONDUIT SIZE	AS	1-4-96
2 ADD NOTE AND MODIFY THE DWG. ON VERT. & HOR. TANK INSTALLATION.	MA	7-20-0
3 ADD "EXPLOSION PROOF SEAL OFF" NOTE	KLB	11-15-1
4 CHANGED PROBE DEPTH, NOTE 13	KLB	11-13-01

safety-kleen corp.
777 BIG TIMBER ROAD • ELGIN, ILLINOIS 60123 PHONE 312-697-8100

HIGH LEVEL ALARM SYSTEM TRANSMITTER TO TANK INSTALLATION DETAILS

NOTE			
1-22-88	1 ADDED CLIENT (MISC. INFO)	RD	7-1-91
RD	2 16" Ø LBS 18", 24" LBS 18"	RD	1-2-92
	3 ADDED SEAL OFF	RD	1-2-92

for: SERVICE CENTER BRANCH

D13102

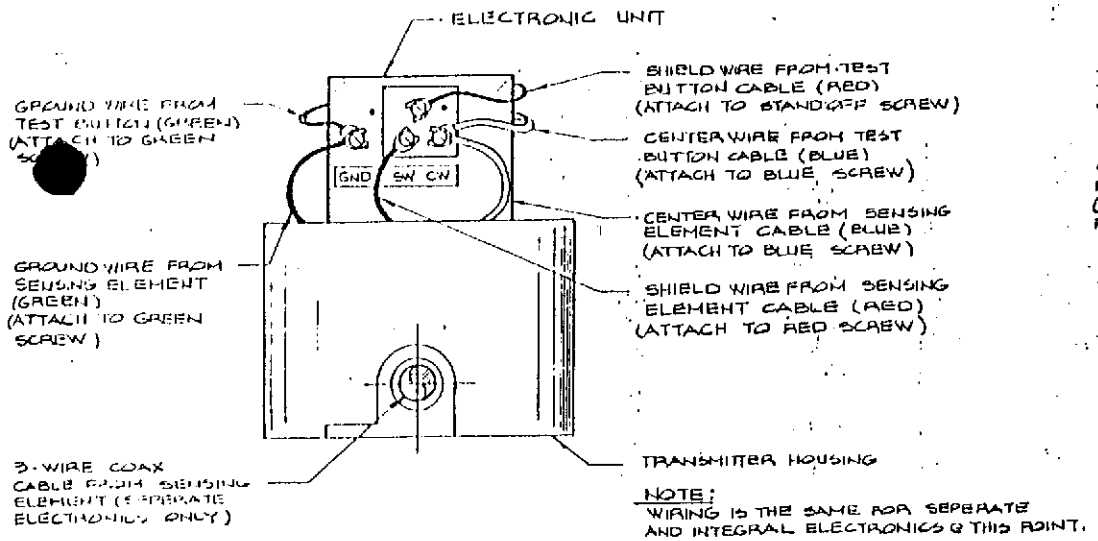

NOTE:
WIRING IS THE SAME FOR SEPERATE AND INTEGRAL ELECTRONICS @ THIS POINT.

ELECTRONIC UNIT BACK VIEW

(SENSING ELEMENT CONNECTIONS)

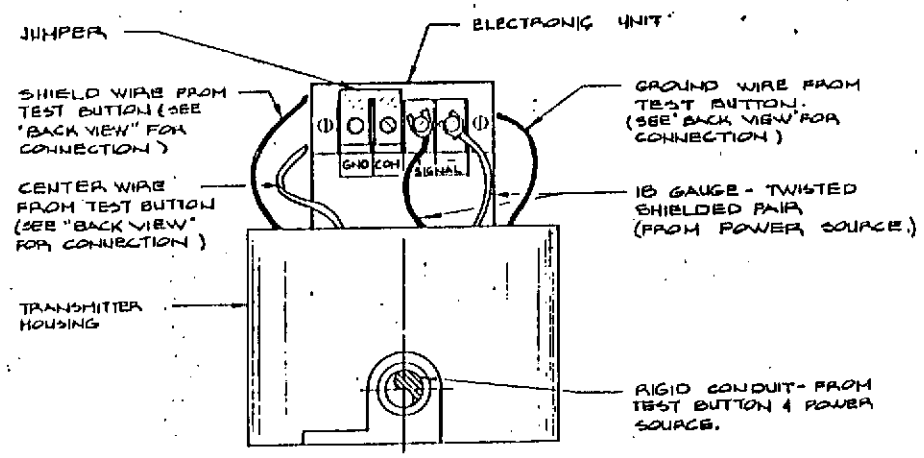

ELECTRONIC UNIT FRONT VIEW

(SIGNAL WIRING)

TERMINATIONS OF COAXIAL CABLE

1. Cut cable to required length plus 2". Strip the ground tracer wire away from the core to a length of about 1". Strip about 3/16" of insulation from the end of the wire. Crimp an 18-22 ga. spade terminal lug onto the ground wire. If possible, this wire should be color-coded green to match the color scheme for the ground connections.

2. Trim outer insulation back 1", cutting down to but not including braided metallic shield.

3. Unravel the metallic braid from the center wire insulation. Twist the braid tightly together. Cut the twisted braid to a length of about 3/8".

4. Using a 14-16 ga. crimp-on butt connector, attach a 4" piece of 20 ga. stranded insulated wire to the twisted braid. In order to make a strong connection with the larger gauge of the butt connector, a 3/8" stripped length of the 20 ga. wire should be twisted and then folded back upon itself before insertion into the butt connector. Crimp an 18-22 ga. spade terminal lug onto the other end of the 4" wire. If possible, this wire should be color-coded red to match the color scheme for the coax-shield connections.

5. Trim about 1/8" of the inner plastic insulation to expose the center wire. Slip an 18-22 ga. spade terminal lug over the bare center wire so that the insulation of the spade lug bottoms out on the inner insulation and the lip of the wire shows at the lug end. Crimp the lug and trim any excess center wire. If possible, this wire should be color-coded blue to match the color scheme for the probe/center wire connections.

6. Slip 1" of 1/2" diameter heatshrink insulation over cable end so that all metallic braid is well covered. Heat the insulation until it shrinks and tightly grips the cable. (Any heat source of 200-250 degrees needed. A propane torch with a low heat flame is recommended.)

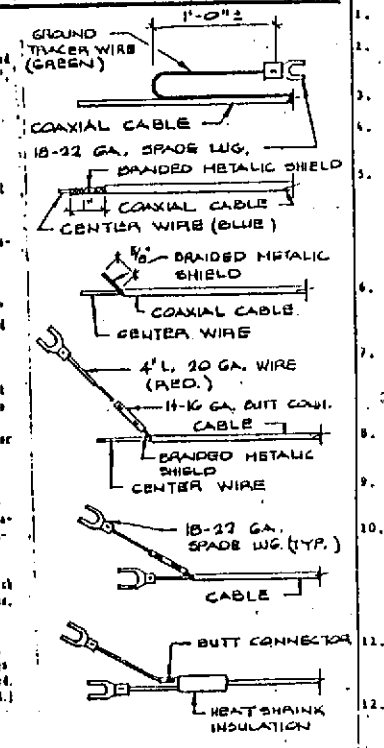

NOTE:
WORK THIS DWG. WITH SK DWGS D-13929 AND D-13102

GENERAL NOTES

1. POWER REQUIREMENT 13 TO 28 VDC
2. OUTPUT 4 - 10 m (ALARM STATE)
   15 - 23 m (NORMAL STATE)
3. OPERATING TEMP. -40°F TO +140°F
4. SHIELD-TO-GROUND LOADING: 25 ohm MIN. RESISTANCE
5. RFI EFFECT: LESS THAN 2 pF SHIFT IN OPERATING POINT FOR UNIT IN EXPLOSION-PROOF HOUSING FROM 3 W FIELD @ 27, 150, OR 450 mHz AT A DISTANCE OF 3 FT. FROM EXPOSED CABLE OR SIGNAL WIRE.
6. FAIL-SAFE: SWITCHABLE OR EITHER LOW-LEVEL FAIL-SAFE (LLFS) OR HIGH-LEVEL FAIL SAFE (HLFS).
7. HOUSING: NEMA 12-WATERPROOF EXPLOSION PROOF FOR CLASS I GROUPS A, B, C, D, AND CLASS II GROUPS E, F, G DIV. 1 OR 2.
8. SEE INDIVIDUAL SERVICE CENTER SITE PLANS FOR RELATIVE LOCATIONS OF THESE DETAILS.
9. CONTRACTOR TO SUPPLY & INSTALL CONDUIT SUPPORTS & BRACKETS AS REQUIRED.
10. THIS DRAWING CONTAINS INFORMATION PROPRIETARY TO SAFETY-KLEEN CORP. ANY REPRODUCTION, DISCLOSURE OR USE OF THIS DRAWING IS EXPRESSLY PROHIBITED BY SAFETY-KLEEN
11. ALL ITEMS SHOWN WITH A SAFETY-KLEEN PART NUMBER WILL BE SUPPLIED BY SAFETY-KLEEN CORP. (e.g. 3K- - - - -)
12. IF INDIVIDUAL SERVICE CENTER CONDITIONS ARE NOT COVERED BY DETAILS SHOWN HERE, PLEASE CONTACT TECHNICAL SERVICES AT THE CORPORATE OFFICE FOR ASSISTANCE.
13. CALCULATIONS FOR LENGTH OF PROBE INSIDE OF TANK ARE SET TO ACTIVATE THE ALARM AT THE 95% VOLUME LEVEL. (A)
14. ALL CALIBRATION OF UNIT SHALL BE DONE IN ACCORDANCE WITH DREKELBROOKS RECOMMENDATIONS. CALIBRATION SHALL BE DONE AFTER ALL COMPONENTS OF SYSTEM ARE IN PLACE. (A)
15. ALL TANKS SHALL BE GROUNDED PRIOR TO INSTALLATION OF ALARM SYSTEM.

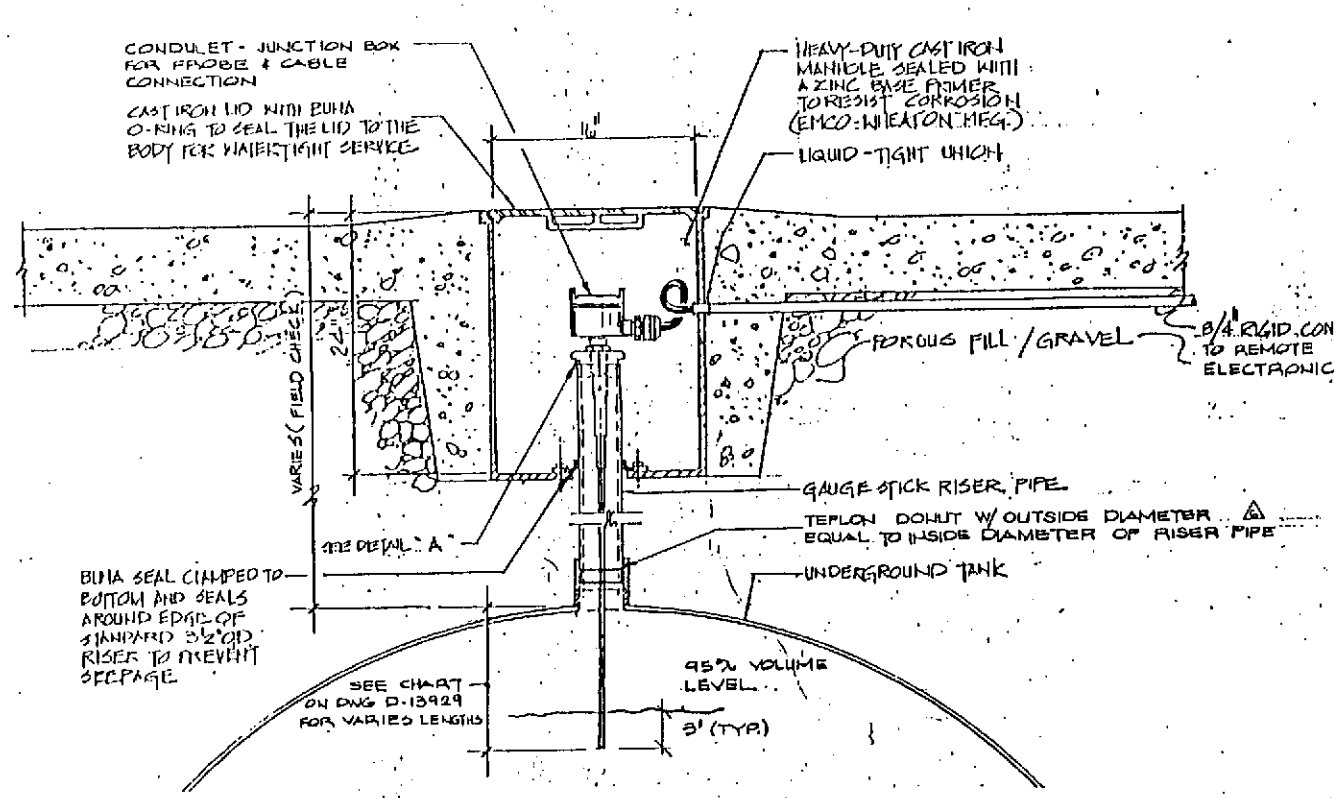

UNDERGROUND TANK RISER PIPE INSTALLATION

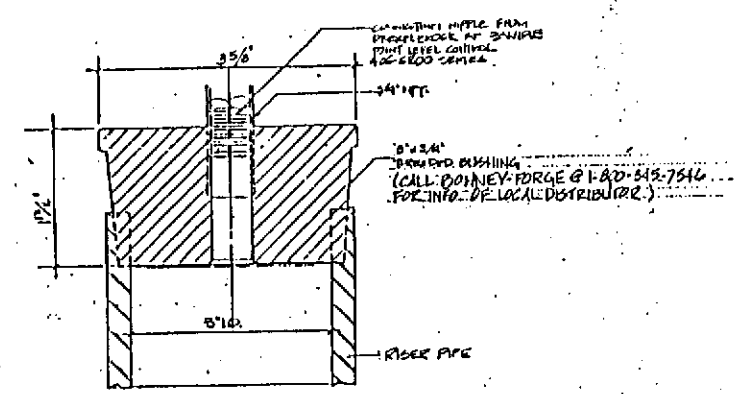

DETAIL A

CALIBRATION OF ELECTRONICS

1. Verify that the liquid is not covering the probe. This can be done by checking the reading on the tank's tape gauge. If the tank is less than full, the probe will not be immersed in liquid.

2. The calibration should be performed with all electrical connections of the system already completed. Any change in these connections invalidates the calibration. Also, make sure that the wires are neatly dressed. This means that the slack in the wires should be pushed down in the conduit (without straining the wires). This protects the wires from damage when the cap of the conduit is screwed on. Also, if the wires are lying too high in the conduit, stray capacitance from the metal cap can alter the operating point of the electronics unit.

3. Using the plastic tuning wrench supplied with the electronics unit, turn the tuning capacitor to the fully counterclockwise position. Then slowly turn the tuning wrench clockwise until the green light illuminates. This is the operating point of the sensor.

4. Identify exactly the position of the operating point and then turn the tuning wrench clockwise exactly one-half additional turn (180 degrees). The green light should remain illuminated. Remove the tuning wrench. Carefully screw the cap on the conduit.

THIS DOCUMENT HAS BEEN PREPARED AND IS APPROVED BY ME FOR INCLUSION IN ENVIRONMENTAL PERMIT; APPROVAL OF THIS DWG. IT IS NEITHER AN ENGINEERING SEAL IT IS NOT TO BE USED FOR PURCHASE OF MATERIAL PROCUREMENT, CONSTRUCTION, OR ANY OTHER PURPOSE

Figure II.C.2-5(b)

(A) ADDED WIRING DETAILS AND NOTES FOR CABLE TERMINATIONS	DS	1-8
(B) ADD NOTES AND MODIFY THE DWG. ON VERT. & HOR. TANK INSTALLATION.	MA	7-5
(C) ADD "EXPLOSION PROOF SEAL-OFF" NOTE	RLB	13-1
(D) CHANGED PROBE DEPTH, NOTE 13	RLB	11-1

safety-kleen corp.
711 BIG TIMBER ROAD • ELGIN, ILLINOIS 60123 • PHONE 312/931-6100

HIGH LEVEL ALARM REMOTE TRANSMITTER TO TANK INSTALLATION DETAILS

SCALE NONE			
DATE 6-22-88	(A) ADDED CHART (MISC. INFO.	RD	7/
DR. RD	(B) 16" & WAS 18"; 22" WAS 18"	RD	7/
	(C) ADDED SEAL-OFF	MA	7/

for: SERVICE CENTER BRANCH

D-1428

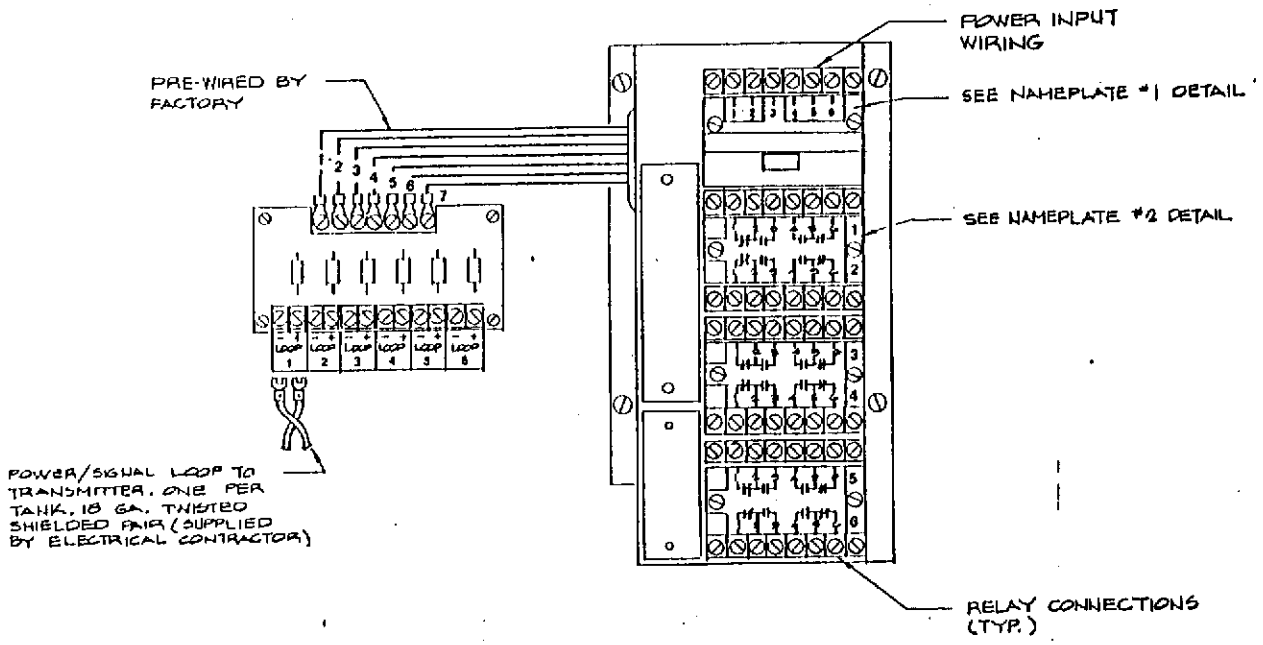

EXISTING UNDERGROUND TANK PROBE LENGTH		
TANK DIAMETER	DISTANCE FROM TOP OF TANK TO 95% VOL. LEVEL.	MINIMUM LENGTH OF PROBE INSIDE TANK
8' - 96"	9"	12"
10' - 120"	11"	14"
12' - 144"	14"	17"

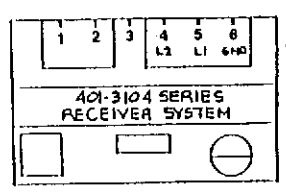

NAMEPLATE #1 DETAIL

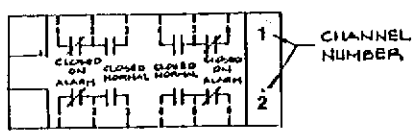

NAMEPLATE #2 DETAIL (TYP.)

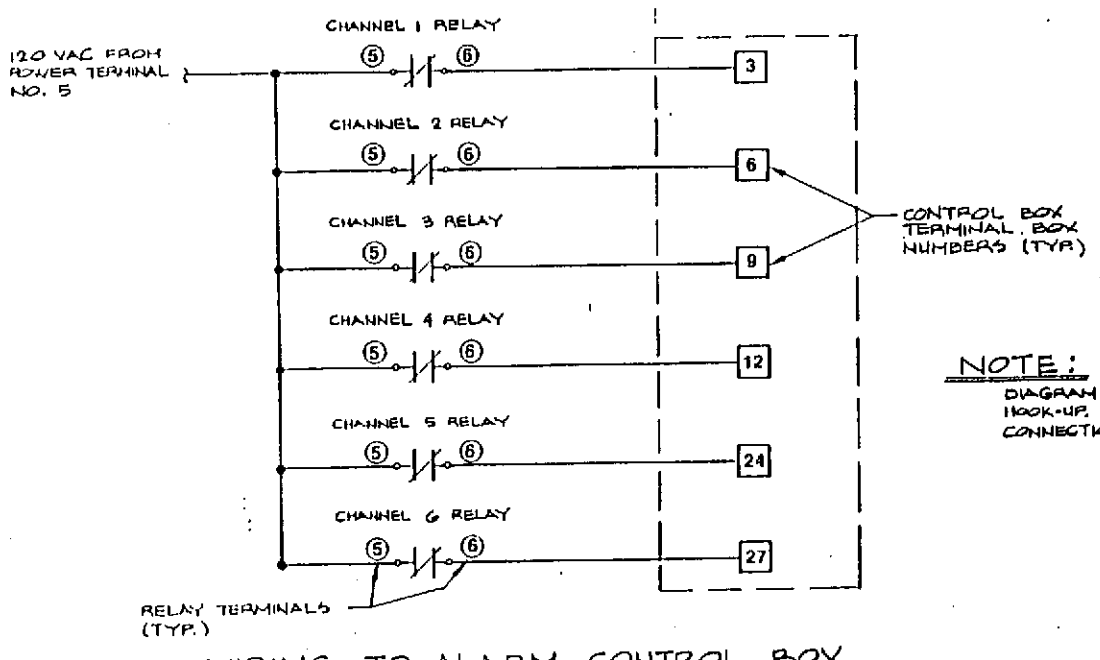

WIRING TO ALARM CONTROL BOX

NOTE:
DIAGRAM SHOWS 6 TANK HOOK-UP, ONLY MAKE CONNECTIONS FOR EXISTING TANKS.

Figure II.C.2-5(c)

NO	DESCRIPTION	BY	CHK	APPR	DATE
	REVISIONS				

TITLE: L.C.T. HIGH LEVEL ALA RECIEVER SYSTEM DETA

SAFETY-KLEEN CORI

SCALE	DRAWN	CHECKED	ENGINEERING APPR	CONTRACTOR APPR
NONE	DLS			

DRAWING NO D-13929

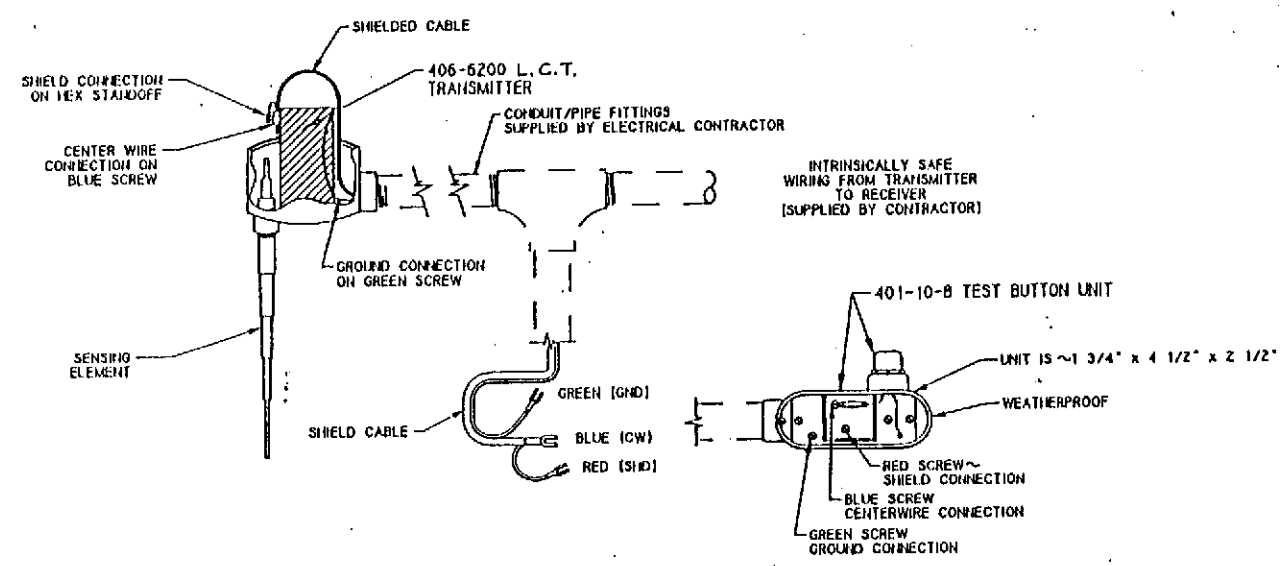

TEST BUTTON DIAGRAM

CUSTOMER CONNECTIONS

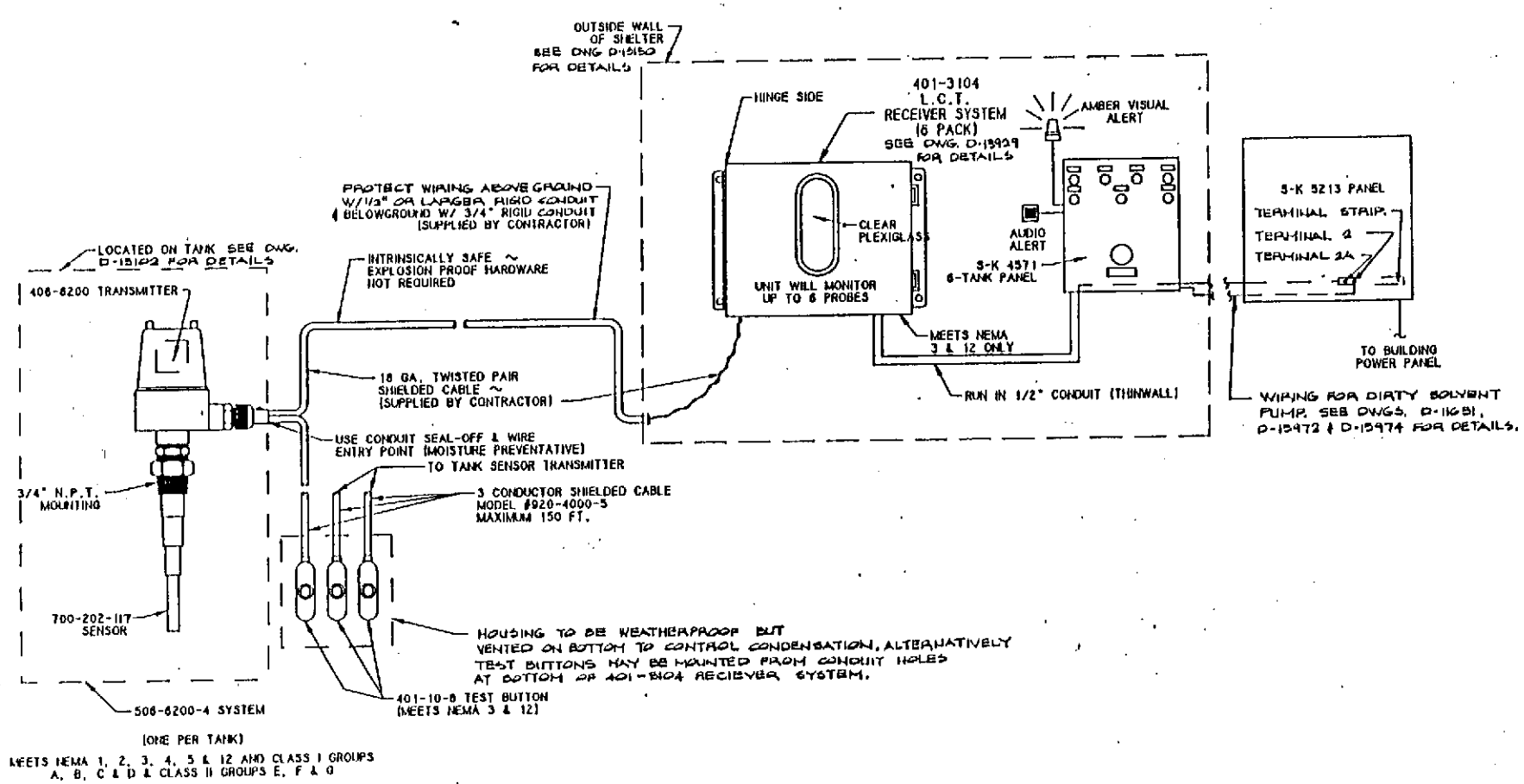

WIRING DIAGRAM OVERVIEW

NO SCALE

GENERAL NOTES:

1. DRAWING IS INTENDED TO SHOW A TYPICAL INSTALLATION ONLY. SEE ACTUAL SITE PLAN.
2. ELECTRICAL CONTRACTOR IS RESPONSIBLE FOR VERIFICATION OF ACTUAL FIELD CONDITIONS.
3. ALL ITEMS SHOWN WITH A SAFETY-KLEEN PART NO. , THESE ITEMS WILL BE SUPPLIED BY S-K.
4. IF ANY FIELD MODIFICATIONS ARE REQUIRED, SAFETY-KLEEN BRANCH CONSTRUCTION GROUP IS TO BE NOTIFIED BEFORE PROCEEDING.
5. E.C. TO SUPPLY & INSTALL ALL RIGID CONDUIT, EMT & ANY NECESSARY LABOR & MATERIALS TO COMPLETE PROJECT.

Figure II.C.2-5(d)

THIS DOCUMENT HAS BEEN PREPARED AND IS APPROVED BY ME FOR INCLUSION IN ENVIRONMENTAL PERMIT APPLICATIONS ONLY. IT IS NEITHER APPROVED NOR IS IT TO BE USED FOR EQUIPMENT OR MATERIAL PROCUREMENT, CONSTRUCTION, OR ANY OTHER PURPOSE.

NO.	DESCRIPTION	BY	CHKD	APPR	DATE
E	ADDED VARIOUS NOTATIONS	DS			1-10-9
D	REV'D. & REDRAWN ON COMP'TR.	HWD			4/18/8
C	ADDED TEST BUTTON UNIT	MA			7/31/8
B	ADDED SEALOFF FITTING	RD			10/17/8
A	REVISED & REDRAWN	RD			3/31/8

REVISIONS

TITLE

L.C.T. HIGH LEVEL ALARM ELECTRICAL DIAGRAM

SAFETY-KLEEN CORP.

FNGR. ENG. APPR.	OPERATIONS APPR.	SCALE	DRAWN	DATE
		NONE	RD	5/12/88

DRAWING NO. D13120 REV. E

TT.C.2-2V

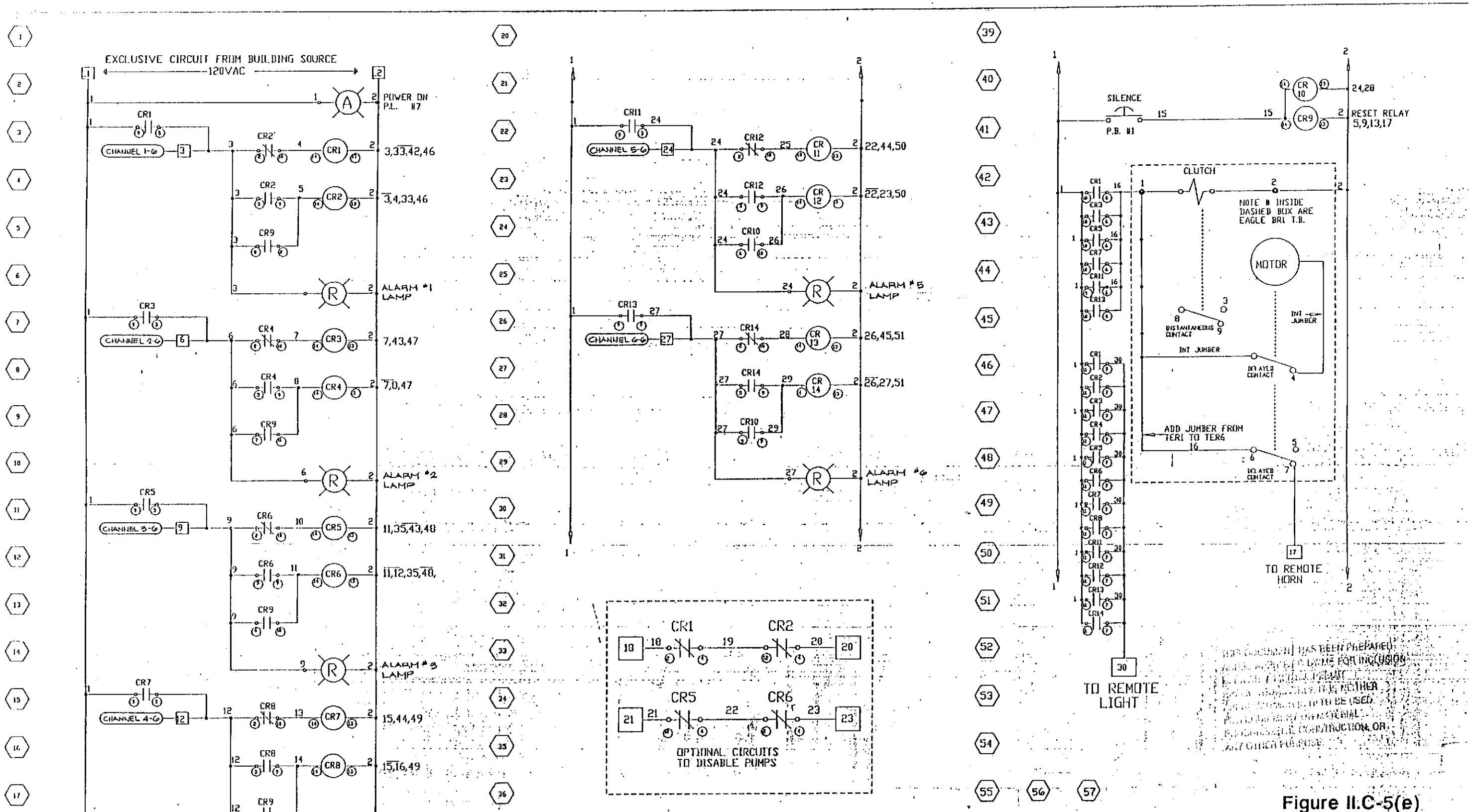

NOTE NUMBERS IN CIRCLES ARE RELAY SOCKET TERMINALS

NOTE NUMBERS IN SQUARE BOXES ARE TERMINAL BLOCK-- WIRE NUMBERS

NOTE:
NUMBERS IN OVALS ARE RELAY TERMINALS IN DRENELBROOK RECIEVER PANEL. SEE DWG D-18929 FOR DETAILS.

Figure II.C-5(e)

NO.	DESCRIPTION	BY	CHK	APPR	DATE
1	REMOVE FLOAT SWITCH WIRING AND ADDED HIGH LEVEL ALARM WIRING.	RJS			1-11-90

TITLE: 6 TANK ALARM CONTROL BOX WITH AUTO SILENCE
SHEET 1 OF 2

SAFETY-KLEEN CORP.

SCALE: NONE | DRAWN: MCU | CHECKED | 10-10-89

5347 | D-13974 | REV 1

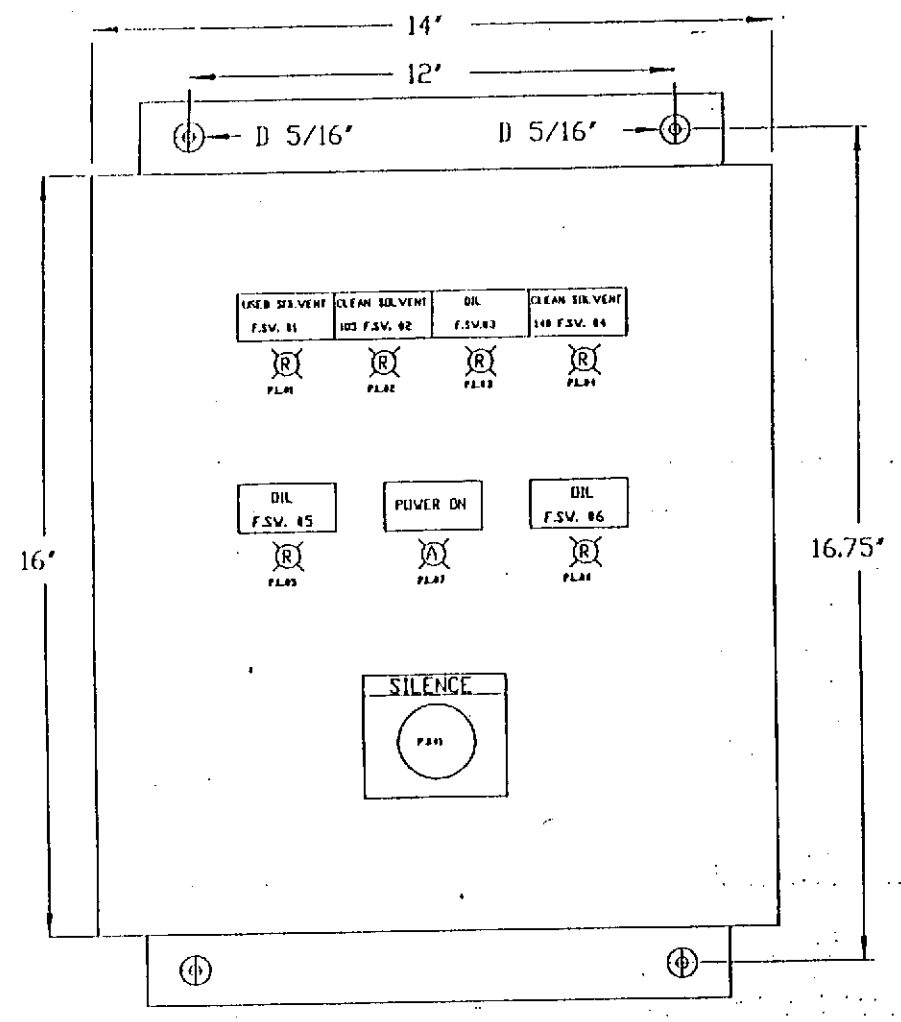

SUB PLATE
COMPONET LOCATION

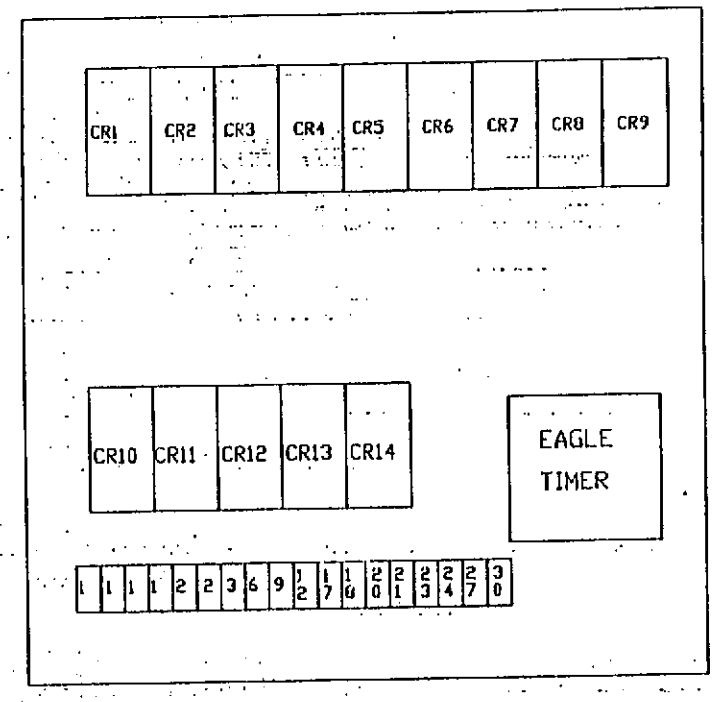

PARTS LIST

QTY		
1	A1614CH	HOFFMAN ENCLOSER
1	A16P14	HOFFMAN SUB PLATE
1	800T-D6D1	A-B RED PUSHBUTTON
1	800T-X700	A-B NAME PLATE
1	BR1-7-A6-00	EAGLE TIMER 5MIN
14	MY4AC120	OMRON RELAY
14	PYF14A	OMRON RELAY BASE
1	PFP-50N	MOUNTING TRACK
7	30099	SYLVANIA LIGHT BASE
6	30120	SYLVANIA RED LENS
1	30126	SYLVANIA AMBER LENS
7	120 PSB	LIGHT BULBS
	1492-H1	TERMINAL BLOCKS A-B
	E-1x2WH6	PANDUIT WIRE WAY
	C-1WH6	PANDUIT COVER

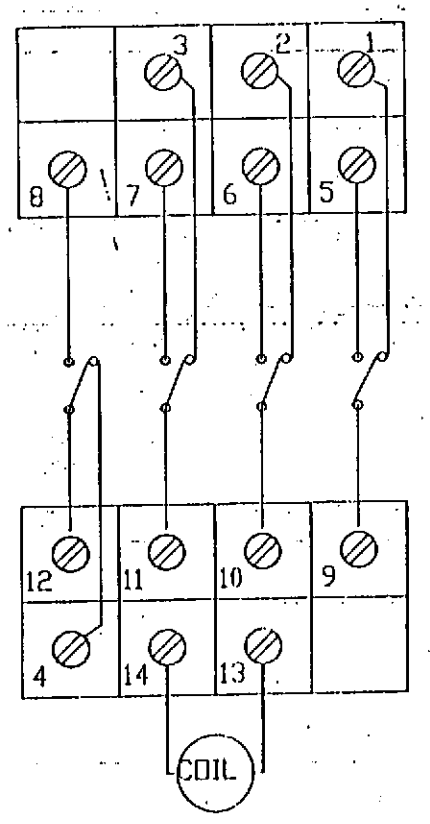

OMRON RELAY
MY4AC120
TERMINAL
LAYOUT

Figure II.C.2-5(f)

NO.	REVISIONS	BY	CHK	APPR	DATE
1	CHANGED PART NO. FOR EAGLE 5 MIN. TIMER	DS			1-8-90

TITLE: 6 TANK ALARM CONTROL BOX WITH AUTO SILENCE
SHEET 2 OF 2

SAFETY-KLEEN CORP.

SCALE	DRAWN	CHECKED	ENGINEERING APPR	DESIGN APPR	DATE
NONE	MCU				10-10-89

DRAWING NO. D-13975 REV. 1

full fillet welds. The weld is done with an E70 electrode and can withstand a 4-psi air pressure test (which is performed by the manufacturer) in accordance with Underwriters Laboratories standards. All tanks will be new and unused.

All tanks will be aboveground, underlain by a 56' x 40' x 6" concrete slab, surrounded by a 36-inch high concrete dike and covered by a roof. Therefore, no surface run-on or precipitation would be in contact with the wastes stored in the tank farm and no run-off collection and management system will be deemed necessary. The exact dimensions of the tank farm may vary slightly during actual construction; however, any containment requirements will be adjusted accordingly. The dike will be sealed with a chemical resistant coating which is still under selection. Level gauges (Figure II.C.2-6) will be used to measure liquid levels in tanks and float switch-activated automatic high level alarms (which consist of a strobe light and siren) will signal the tank's being 95 percent full. This alarm will allow an operator more than two minutes to stop operations and avoid overfilling the tank. In addition, the gauges of the tank must be read before filling and before and during the filling of a tanker truck (the available volume of which must be noted prior to emptying the tank) to prevent overfilling of the truck. A suction pump equipped with the tanker truck will be used to withdraw used mineral spirits from the tank. No other equipment or standby equipment will be used in the operation of the aboveground tanks. The secondary containment under the tanks and return/fill station must be cleaned within 24 hours of a spill.

Material which collects in the tank dike and return/fill station can be removed using a "wet/dry" vacuum, sorbents, or mop.

"No smoking" signs will be posted on the entrances to the tank farm and return/fill station.

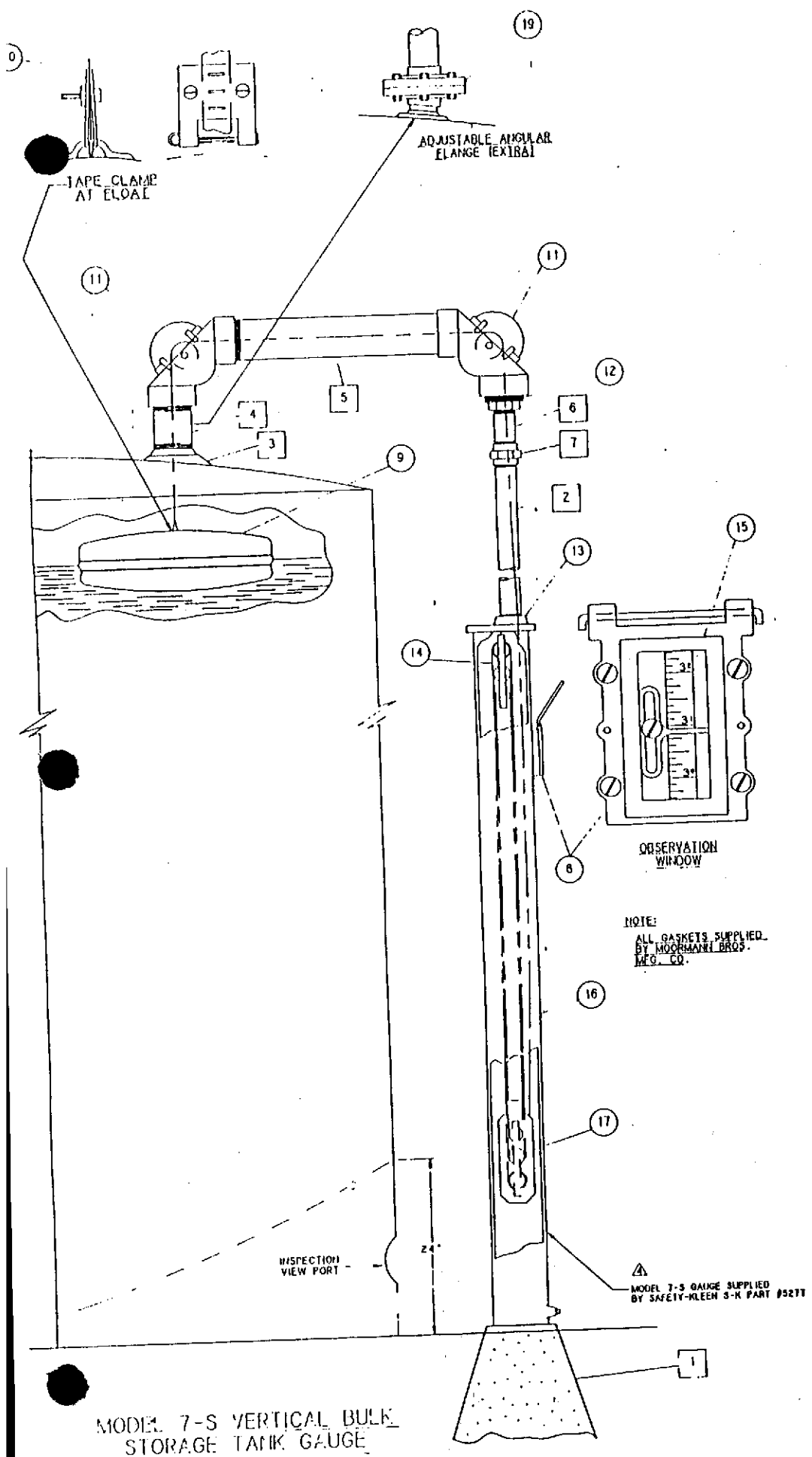

NOTE:
ALL GASKETS SUPPLIED BY MOORMANN BROS. MFG. CO.

MODEL 7-S VERTICAL BULK STORAGE TANK GAUGE

INSTALLATION INSTRUCTIONS - MODEL 7-S

1. LOCATE GAUGE POSITION ON GROUND - MARK TOP EDGE OF TANK DIRECTLY ABOVE GROUND LOCATION.
2. MEASURE, CUT AND THREAD 2" PIPE (AS MARKED ON PRINT).
3. USE PIPE DOPE ON ALL CONNECTIONS.
4. ASSEMBLE BOTH A-30 ELBOWS AND 2" PIPE AS SHOWN ON PRINT.
5. SCREW (1) ELBOW A-30 ONTO 2" PIPE WITH REDUCING BUSHING. CLOSE NIPPLE AND UNION AS SHOWN ON PRINT; OTHER A-30 ELBOW ONTO 2" NIPPLE IN TANK THEN SCREW OTHER END OF 2" PIPE INTO TANK ELBOW, MAKE STRAIGHT WITH TANK MARKING.
6. LEVEL 2" PIPE, USE TEMPORARY WOOD BRACE OR ALIGNMENT FLANGE, IF NECESSARY.
7. SET GAUGE HOUSING WITH ECCENTRIC CAP ASSEMBLED ON GROUND DIRECTLY BELOW OVERHANGING ELBOW.
8. MEASURE FOR 1" PIPE (REDUCING BUSHING IN ELBOW TO ECCENTRIC CAP V-71 ON GAUGE HOUSING) ALLOW FOR THREADS. CUT AND THREAD 1" PIPE.
9. SCREW 1" PIPE INTO ELBOW. THEN REMOVE V-71 ECCENTRIC CAP FROM HOUSING AND PUT ON 1" PIPE. CAUTION - BE SURE ECCENTRIC CAP IS STRAIGHT AND 1" OUTLET IS FARTHEST AWAY FROM TANK.
10. FASTEN PULLEY RACK WITH LARGE PULLEY UP TO ECCENTRIC CAP USING STAINLESS STEEL PINS.
11. ASSEMBLE OTHER PULLEY RACK IN COUNTERWEIGHTS WITH LARGE PULLEY DOWN.
12. PLACE COUNTERWEIGHT ON GROUND DIRECTLY BENEATH ECCENTRIC CAP PULLEY RACK.
13. REMOVE A-33 CAPS FROM BOTH ELBOWS.
14. THREAD TAPE FROM TANK ELBOW WITH NUMBERS UP AND CLIP ENDS FIRST THROUGH 2" PIPE AND OVER ELBOW PULLEYS DOWN THROUGH 1" PIPE AND OUT ECCENTRIC CAP, STRAIGHT DOWN AND AROUND BOTTOM PULLEY IN C/W AND UP AND OVER TOP PULLEY IN ECCENTRIC CAP, DOWN TO MEDIUM PULLEY UP AND OVER MEDIUM PULLEY, DOWN AND AROUND SMALL PULLEY ON C/W AND UP AND AROUND SMALL PULLEY ON ECCENTRIC CAP, DOWN AND FASTEN TO LUG ON COUNTERWEIGHT PULLEY RACK - USE STAINLESS STEEL PIN. CAUTION - DO NOT THREAD TAPE OVER OR UNDER CROSS BARS IN PULLEY RACK. USE CAUTION - DO NOT KINK OR BEND TAPE.
15. FASTEN TAPE TO FLOAT WITH TAPE CLAMP (AS PER PRINT) CAUTION - DO NOT FASTEN TAPE CLAMP TOO TIGHT AS THIS MAY DAMAGE TAPE.
16. PLACE ECCENTRIC CAP GASKET ON HOUSING TOP AND INSERT COUNTERWEIGHT ASSEMBLY INTO HOUSING. CAUTION! - DO NOT ALLOW C/W TO DROP OR JERK AS THIS MAY CAUSE DAMAGE TO BEARINGS. ALSO BE SURE THE TAPE IS IN GROOVE OF PULLEYS AND NOT ON THE EDGE.
17. FASTEN HOUSING TO ECCENTRIC CAP WITH OBSERVATION WINDOW DIRECTLY BELOW 1" PIPE.
18. PLACE OUTSIDE STRAND OF TAPE OVER TAPE GUIDE IN OBSERVATION WINDOW. CAUTION - DO NOT BEND OR KINK TAPE. AND PUT ONLY ONE(1) STRAND OF TAPE OVER THE TAPE GUIDE.
19. FIX BASE FOR HOUSING EITHER, CONCRETE, WOOD POST, OR STEEL PLATE WELDED TO TANK. - CAUTION - DO NOT WELD GAUGE HOUSING TO TANK.
20. PERFORM CALIBRATION AS DESCRIBED IN "CALIBRATION DETAILS - EMPTY TANK" (THIS DRAWING). IN PERFORMING THIS CALIBRATION, 1/2", 1/4" OR EVEN 1/8" IS NOT CLOSE ENOUGH. BE PARTICULAR; SET THE GAUGE AS CLOSE AS POSSIBLE TO THE CORRECT READING (1 3/8" FOR EMPTY TANK. TRUE FLUID LEVEL FOR NON EMPTY TANK).
21. CAUTION - LET FLOAT DOWN IN TANK EASILY. DO NOT LET IT DROP.
22. ASSEMBLE OBSERVATION FRAME AND LID A-34 & 36 PLACE ON HOUSING. TIGHTEN FOR VAPOR-PROOFING.
23. IN MOST CLIMATES, CONDENSATION FORMS INSIDE TANK AND GAUGE. A DRAIN PLUG HAS BEEN PROVIDED FOR DRAINING AT THE BOTTOM OF HOUSING. IN MOST CLIMATES THIS IS NECESSARY 2 TIMES A YEAR (SPRING & FALL). HOWEVER, IN EXTREME CASES DRAINING IS REQUIRED MORE OFTEN.

CALIBRATION DETAILS - EMPTY TANK

1. BEFORE CALIBRATION, COMPLETE INSTALLATION THROUGH STEP 19 OF INSTALLATION INSTRUCTIONS (THIS DRAWING).
2. IN ALL SUCCEEDING STEPS, BE CAREFUL NOT TO TWIST OR KINK THE TAPE.
3. THROUGH OPEN MANWAY AT THE TOP OF THE TANK, LOWER FLOAT SLOWLY AND LET IT COME TO REST GENTLY AT THE BOTTOM OF THE TANK, DIRECTLY BENEATH THE TANK ROOF FLANGE. BECAUSE THE TANK BOTTOM IS CONCAVE, THE FLOAT MAY TEND TO SIDESLIP TO THE CENTER OF THE TANK BOTTOM, THUS INTRODUCING ERROR INTO THE CALCULATION. GENTLY LOWERING THE FLOAT MINIMIZES THIS SLIPPAGE AND THE RESULTING ERROR.
4. DETERMINE THE REQUIRED TAPE ADJUSTMENT AS FOLLOWS: WITH THE FLOAT AT THE TANK BOTTOM DIRECTLY BENEATH THE ROOF FLANGE, RECORD THE TAPE READING AT THE OBSERVATION WINDOW. AN EMPTY TANK SHOULD READ 1 3/8" (THE FLOAT DRAFT). THE REQUIRED TAPE ADJUSTMENT CAN BE COMPUTED AS THE ACTUAL READING MINUS 1 3/8".
5. MARK THE TAPE AT THE POSITION AT WHICH IT IS FASTENED TO THE FLOAT. UNCLAMP THE TAPE FROM THE FLOAT. MEASURE OFF THE REQUIRED ADJUSTMENT USING A TAPE MEASURE AND MARK THE NEW POSITION. CUT THE TAPE TO SIZE, LEAVING ABOUT 2" EXCESS SLACK. THIS SLACK IS NECESSARY BECAUSE CUTTING OFF TOO MUCH TAPE WILL RENDER THE TAPE UNUSABLE. REFASTEN THE TAPE TO THE FLOAT AT THE NEWLY MARKED POSITION. DO NOT FASTEN THE TAPE CLAMP TOO TIGHTLY. AS THIS MAY DAMAGE THE TAPE.
6. REPEAT STEPS 3 & 4 TO CHECK THE CALIBRATION. IF THE ERROR IS LESS THAN 1". THE REMAINING ADJUSTMENT MAY BE MADE USING THE FINGER IN THE OBSERVATION WINDOW. FOR MAJOR ADJUSTMENTS (OVER 1"), REPEAT STEP 5.
7. WHEN CALIBRATION IS COMPLETE, CUT THE EXCESS TAPE AT FLOAT, LEAVING 6" FOR MINOR ADJUSTMENTS. LOWER THE FLOAT GENTLY TO THE TANK BOTTOM.

CALIBRATION DETAILS - NON-EMPTY TANK

1. DETERMINE THE REQUIRED TAPE ADJUSTMENT AS FOLLOWS:

   A) USE A MEASURING STICK OR WEIGHTED LINE TO MEASURE THE TRUE FLUID LEVEL IN THE TANK. BECAUSE THE CONCAVE BOTTOM OF THE TANK RESULTS IN VARYING DEPTHS. THIS MEASUREMENT SHOULD BE PERFORMED AS CLOSE AS POSSIBLE TO THE ACTUAL POSITION OF THE FLOAT IN THE TANK.

   B) RECORD THE TAPE READING AT THE OBSERVATION WINDOW.

   C) THE REQUIRED TAPE ADJUSTMENT CAN BE COMPUTED AS THE TAPE READING MINUS THE TRUE FLUID LEVEL.

2. TO GAIN ACCESS TO THE FLOAT AND TAPE IN THE TANK, OPEN THE MANWAY AT THE TOP OF THE TANK. ALSO REMOVE THE A-33 CAP FROM A-30 ELBOW ASSEMBLY. IN ALL SUCCEEDING STEPS, BE CAREFUL NOT TO TWIST OR KINK THE TAPE.
3. GRASPING THE TAPE THROUGH THE OPEN MANWAY, CAREFULLY RAISE THE FLOAT OUT OF THE TANK. MARK THE TAPE AT THE POSITION AT WHICH IT IS FASTENED TO THE FLOAT. UNCLAMP THE TAPE FROM THE FLOAT. MEASURE OFF THE REQUIRED ADJUSTMENT USING A TAPE MEASURE AND MARK THE NEW POSITION. CUT THE TAPE TO SIZE, LEAVING ABOUT 2" EXCESS SLACK. THIS SLACK IS NECESSARY BECAUSE CUTTING OFF TOO MUCH TAPE WILL RENDER THE TAPE UNUSABLE. REFASTEN THE TAPE TO THE FLOAT AT THE NEWLY MARKED POSITION. DO NOT FASTEN THE TAPE CLAMP TOO TIGHTLY, AS THIS MAY DAMAGE THE TAPE. CAREFULLY LOWER THE FLOAT INTO THE TANK.
4. REPEAT STEP 1 TO CHECK THE CALIBRATION. IF THE ERROR IS LESS THAN 1" THE REMAINING ADJUSTMENT MAY BE MADE USING THE FINGER IN THE OBSERVATION WINDOW. FOR MAJOR ADJUSTMENTS (OVER 1"), REPEAT STEP 3.
5. WHEN CALIBRATION IS COMPLETE, CUT THE EXCESS TAPE AT THE FLOAT, LEAVING 6" FOR MINOR ADJUSTMENTS. LOWER THE FLOAT GENTLY INTO THE TANK. REPLACE THE A-33 CAP ON THE A-30 ELBOW ASSEMBLY. CLOSE THE MANWAY.

MATERIAL LIST
MODEL 7-S

FOR ALL VERTICAL TANKS UP TO & INCLUDING 35'

[ ] MATERIAL SUPPLIED BY CONTRACTOR

1. GAUGE HOUSING BASE SUPPORT.
2. 1" GALVANIZED PIPE (CUT TO LENGTH).
3. TANK ROOF FLANGE.
4. 2" TANK OPENING PIPE.
5. 2" GALVANIZED PIPE (CUT TO LENGTH).
6. 1" GALVANIZED NIPPLE (ANY LENGTH).
7. 1" GALVANIZED UNION.

( ) MATERIAL SUPPLIED BY MOORMANN BROS. (SAFTY-KLEEN)

PART NAME	PART NO.	QUANTITY PER UNIT
8. OBSERVATION WINDOW ASSEMBLY	A-34-A-36	1
9. FLOAT	V-75	1
10. STAINLESS STEEL TAPE CLAMP & SCREWS	V-93	1
11. ELBOW ASSEMBLY COMPLETE	A-30, A-33	2
12. 2" TO 1" REDUCING BUSHING		1
13. ECCENTRIC CAP COMPLETE WITH NUTS & BOLTS	V-71	1
14. PULLEY RACK ASSEMBLY	V-73	2
15. LUFKIN STAINLESS STEEL HIGH VISIBILITY TAPE	V-49	1
16. RUST-PROOFED STEEL GAUGE HOUSING	V-77	1
17. COUNTERWEIGHT	V-72	2
18. CONDENSATION DRAIN PLUG		1
FRAME & LID ASSEMBLY FOR OBSERVATION WINDOW	A-34, A-36	1
GASKETS - SET FOR OBSERVATION WINDOW	V-81, V-82	1
GASKET - ELBOW CAP	V-83	2
GASKET - V-71 ECCENTRIC CAP	V-84	1
GLASS - WINDOW	V-86	1
STAINLESS STEEL INDICATOR FINGER FOR OBSERVATION WINDOW	V-94	1
WIRE PIN - STAINLESS STEEL	V-96	5

THIS DOCUMENT HAS BEEN PREPARED AND IS APPROVED BY ME FOR INCLUSION IN ENVIRONMENTAL PERMIT APPLICATIONS ONLY. IT IS NEITHER APPROVED NOR IS IT TO BE USED FOR EQUIPMENT OR MATERIAL PROCUREMENT, CONSTRUCTION, OR ANY OTHER PURPOSE.

START TAPE, CLIP END FIRST, WITH NUMBERS ON TAPE FACING TOWARD FRONT OF GAUGE HOUSING, AROUND LARGE BOTTOM PULLEY, UP TO LARGE TOP PULLEY, DOWN TO MEDIUM BOTTOM PULLEY, UP TO MEDIUM TOP PULLEY, DOWN TO SMALL BOTTOM PULLEY, UP TO SMALL TOP PULLEY, AND THEN SECURE CLIP END OF TAPE WITH A COTTER PIN TO THE TOP OF THE BOTTOM PULLEY RACK (V-72) ASSEMBLY.

SEE NOTE 14 ABOVE.

NOTE:
FOR GENERAL INFORMATION, THERE IS
5'-0" OF STARTER TAPE
43'-0" NUMBERED TAPE
42'-2" LEADER TAPE
91'-0" APPROX. OVERALL

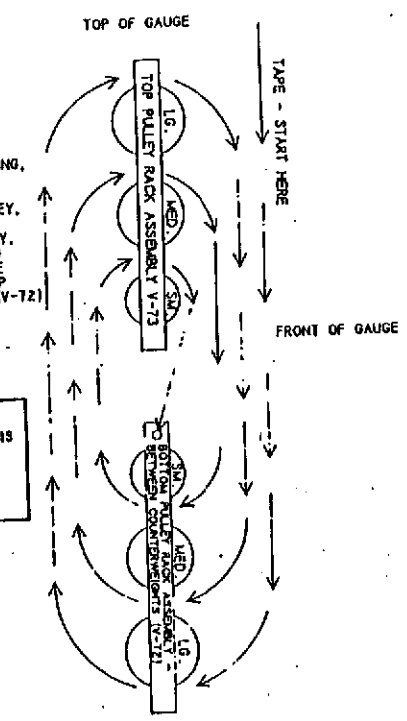

ENLARGED DETAIL SHOWING HOW TAPE IS WOUND ON PULLEY RACK ASSEMBLIES OF MOORMANN MODEL #7-S. CUT OFF EXCESS TAPE AT FLOAT.

BJ4
JS 2/15/89

GENERAL NOTES

1. TANK GAUGE ASSEMBLY SUPPLIED BY SAFETY-KLEEN CORP.
2. SEE INDIVIDUAL SERVICE CENTER SITE PLANS FOR LOCATION OF THE INSTALLATION.
3. GAUGE MUST BE ORDERED WITH THE PERFORATED TAPE FOR FUTURE REMOTE READ-OUT SYSTEM.
4. ALL EXPOSED NON-PROTECTED STEEL IS TO BE PAINTED PER SAFETY-KLEEN SPECIFICATIONS.
5. IF REQUIRED, ADDITIONAL VERBAL INSTALLATION INSTRUCTIONS CAN BE OBTAINED BY CALLING MOORMANN BROS. MFG. CO., RUSHVILLE, INDIANA - (317) 932-3590 - ASK FOR: BOB GAINES OR JIM RAVENCRAFT

Figure II.C.2-6

	DESCRIPTION	BY	CHKD	APPR	DATE
8	ADDED NOTE #, CHKD & APPR	JHD			3-5-92
7	DRG. # WAS A10243	RD			2/87
6	REV'D NOTES 19-21 AND ADDITIONAL CALIBRATION INFORMATION	RD			1/12/
5	RMV'D. HI-LEV. ALARM INFO.	RD			7/57
4	ADDED SAFETY-KLEEN PART #5	RD			7/15
3	ADDED ADDITIONAL HIGH LEVEL ALARM INFO	RD			10/6
2	ADDED TAPE WINDING INFO.	WJ			5/21
1	ADDED NOTE 5	WJ			7/13

REVISIONS

TITLE: MOORMANN BROS. TANK GAUGE INSTALLATION (DISHED BOTTOM TANKS ONLY)

SAFETY-KLEEN CORP.
777 BIG TIMBER ROAD, ELGIN, ILLINOIS 60120 PHONE 312/697-6460

PROJ. ENG. APPR.	OPERATIONS APPR.	SCALE	DRAWN	DATE
		NONE	WJ	10/7

BRANCH: FOR SERVICE CENTER BRANCH
DRAWING NO.: STD-2015

ATTACHMENT II.C.6

NEW TANK SYSTEMS

LETTER OF CERTIFICATION

December 31, 1991

I, Victor E. Hiatt, P.E., have reviewed the design and installation plan of Safety-Kleen Corp.'s (Safety-Kleen) new aboveground hazardous waste storage tank system and secondary containment for used ethylene glycol and ancillary equipment at the Medley, Florida Service Center. My duty was to perform a preconstruction assessment of the design and installation plan for the hazardous waste storage tank system and secondary containment components which include the dike walls and concrete slab of the vault, the tanks, and tank piping, as required by the Resource Conservation and Recovery Act, 1976 (RCRA) regulations, 40 CFR 264.192, applicable paragraphs (a through g) and 40 CFR 264.193, applicable paragraphs (a through f).

I certify under penalty of law that this document and all attachments were prepared under my direction or supervision in accordance with a system designed to assure that qualified personnel properly gather and evaluate the information submitted. Based on my inquiry of the person or persons who manage the system or those persons directly responsible for gathering the information, the information submitted is, to the best of my knowledge and belief, true, accurate, and complete. I am aware that there are significant penalties for submitting false information, including the possibility of fine and imprisonment for knowing violations.

Victor E. Hiatt

Victor E. Hiatt, P.E.

Engineering Manager

Title

Florida Professional Engineer PE26787

Registration Number

Victor E. Hiatt
1/9/92

9501 Princess Palm Avenue, Suite 100
Tampa, FL 33619

Address

13112.21/04/SKCERT.LTR/2

The ERM Group

December 31, 1991

Project No. 13112.21

Mr. Victor San Agustin, P.E.
Safety-Kleen Corp.
777 Big Timber Road
Elgin, IL 60123

RE: Hazardous Waste Storage Preconstruction Assessment--Used Ethylene Glycol, Medley, Florida

Dear Mr. San Agustin:

Environmental Resources Management-South, Inc. (ERM) has been contracted by Safety-Kleen Corp. (Safety-Kleen) to certify that the design and installation plan of Safety-Kleen's new aboveground hazardous waste storage tank, auxiliary equipment and secondary containment for used ethylene glycol at the Medley, Florida Service Center are in full compliance with Federal Regulations 40 CFR 264.192 and 40 CFR 264.193, and applicable portions of Chapter 17-730 of the Florida Administrative Code (FAC).

This letter will present those aspects of the design and installation plan for the tank system and secondary containment which are necessary to determine compliance with 40 CFR 264.192 and 40 CFR 264.193, and which the firm has assessed and reviewed.

Safety-Kleen's Medley, Florida facility will contain six 20,000-gallon tanks, one for mineral spirits product, two for non-hazardous waste oil, one for used mineral spirits, one for used ethylene glycol, and one for perchloroethylene. (Refer to Drawing No. 309702/2001). This

preconstruction assessment addresses the used ethylene glycol tank, auxiliary equipment, and secondary containment only.

Regulatory requirements:

<u>40 CFR 264.192 (a)</u>

An assessment that the foundation, structural support, seams, and connections are adequately designed and that the tank system will have sufficient structural strength, compatibility with the waste to be stored, and corrosion protection to ensure that it will not collapse, rupture, or fail.

1. According to the Safety-Kleen specifications, the tank has been designed and constructed in accordance with Underwriters Laboratories, Inc., "Standard for Steel Aboveground Tanks for Flammable and Combustible Liquids." Victor E. Hiatt, P.E., ERM-South, Inc. has not evaluated the tank design or the specifications and does not take responsibility for them. The tank shell thickness has been specified as 1/4" from 0- to 18-feet, and 3/16" from 18- to 24-feet. The tank bottom is specified as 1/4" thick steel. The tank top is specified as 3/16" thick steel. See Drawing No. 9010.

   The tank operating pressure will be standard atmospheric and the operating temperature ambient. The specific gravity of ethylene glycol is 1.07. The maximum height of liquid in the tank will be at 95 percent capacity and will be monitored by a high level alarm system.

2. i. The hazardous characteristics of the used ethylene glycol waste, as defined by 40 CFR 261, are the following:

A. Ignitability (D001) - A waste is considered ignitable, and therefore hazardous, if its flash point is below 140° F.

The used ethylene glycol to be stored in this tank has a typical flash point in the range of 240° F and, therefore, is not ignitable (D001).

B. Ethylene glycol waste is approximately 1/3 water with the remaining 2/3 being ethylene glycol and contaminants. During normal use of ethylene glycol, contaminants are often introduced and may appear in a TCLP analysis of used ethylene glycol. In order to account for these waste contaminants, Safety-Kleen is permitting the storage tank area for used ethylene glycol to store wastes with the following TCLP waste codes:

Toxicity characteristics due to various heavy metal and solvent contaminants (D004, D005, D006, D007, D008, D009, D010, D011, D018, D019, D021, D022, D023, D024, D025, D026, D027, D028, D029, D030, D032, D033, D034, D035, D036, D037, D038, D039, D040, D041, D042, and D043.)

A waste is considered to be toxic characteristic if the contaminants levels listed in 40 CFR 261.24 are exceeded. Safety-Kleen's used ethylene glycol may contain these contaminants at or above the low concentrations at which they are regulated because they are solvents and metals which are commonly found in the industries served by Safety-Kleen.

Of these hazardous waste characteristics, none would affect the compatibility of the used ethylene glycol waste with the carbon steel tank material. The ignitability quality on its own

would not affect the steel tank. The presence of cadmium and lead under normal conditions would also not have an adverse effect on the tank material.

ii. The National Fire Protection Agency identifies three types of fire hazards by degree. These ratings for the used ethylene glycol are provided below.

A. Health Hazards--1. Includes "materials which on exposure under fire conditions would offer a slight hazard beyond that of normal combustible material."

B. Flammability Hazards--1. Includes "materials that must be heated or exposed to high ambient temperatures before ignition can occur... (and) should include liquids having a flash point above 200° F."

C. Reactivity (instability) Hazards--0. Includes "materials which in themselves are normally stable, even under fire exposure conditions, and which are not reactive with water."

iii. Finally, the Material Safety Data Sheet (MSDS) for fresh ethylene glycol, which has mostly the same characteristics as used ethylene glycol, describes the material as stable and combustible, and incompatible only with strong oxidizing agents. Warnings include avoiding heat, sparks and flame. Operating procedures are such that they minimize the possibility of ignition sources near the tank farm. Oxidizers are not handled at the Medley, Florida Service Center.

Therefore, it can be concluded that there is no apparent incompatibility of the tank with the hazardous waste contents.

3. This section of the regulations addresses tank systems for which the external shell or any external metal component will be in contact with soil or water and, therefore, pertains primarily to underground or submerged tank systems. Since the tank and all components will be above ground, there will be no contact with the soil. There will be no contact with precipitation as this will be a covered area.

   Corrosion protection is achieved by rust-resistant coatings. The tank surface will be prepared in compliance with the Steel Structure Painting Code SSPC - SP6-63T, and then painted with one coat of Sherwin Williams Zinc Clad III paint and two coats of acrylic base paint to ensure proper sealing. (Refer to Drawing No. 9010).

4. This section of the regulations applies to underground tank systems only and, therefore, is not applicable.

5. Designs have been analyzed to ensure the following:

   i. Tank foundations will maintain the load of the full tanks. An analysis of this design (a copy of which is attached) was performed, resulting in the following comparisons of maximum stress versus allowable stress in the materials:

	Maximum Stress	Allowable Stress
a. Concrete Slab	418 psi	4,000 psi
b. Underlying Soil	590 psf	2,500 psf

ii. The tank system need not be anchored since it will not be placed in a saturated zone (i.e., this applies to underground tanks only), and it will not be located in a seismic fault zone.

iii. The tank system will not be installed on soils susceptible to frost heave.

40 CFR 264.192 (b)

Safety-Kleen ensures that proper handling procedures will be used during installation, with continuous inspection by the installers and experienced Safety-Kleen personnel. Final inspection will be performed by a registered professional engineer in the state of Florida, with specific attention paid to:

1. Weld breaks;
2. Punctures;
3. Scrapes of protective coatings;
4. Cracks;
5. Corrosion; and
6. Other structural damage or inadequate construction/installation.

All discrepancies will be remedied before the thank is authorized to be placed in use.

40 CFR 264.192 (c)

This section applies to underground tanks.

40 CFR 264.192 (d)

The tank and ancillary equipment will be tested by a registered professional engineer in the state of Florida. All repairs necessary to remedy any leaks discovered will be performed before the tanks are authorized to be placed in use.

40 CFR 264.192 (e)

Ancillary equipment will be supported and protected against physical damage and excessive stress due to settlement, vibration, expansion, or contraction. Lengths of piping will be supported no less than every eight running feet.

Daily inspections by Safety-Kleen personnel after being placed in use will ensure the integrity of the tank system, and the absence of leaks. Two specific checks will be made of the high level alarms, and of the volume of liquid held in the tanks. Should sudden deviations in solvent volume occur, an investigation to determine the cause will be made immediately, and repairs initiated.

40 CFR 264.192 (f)

This section deals with information provided under paragraph (a)(3). As mentioned above, this paragraph concerns itself primarily with corrosion and corrosion protection of underground or submerged tanks. To recap what has already been presented regarding corrosion protection, three points are mentioned here:

1. The storage tank and all ancillary equipment will be above ground and, therefore, will not be in contact with the soil.

2. All exterior surfaces of the tank will be sealed and painted; all piping will be either galvanized material or painted; and all exposed threads, joints, and welds will be painted with a rust-resistant exterior grade paint.

3. The used ethylene glycol is not corrosive.

40 CFR 264.192 (g)

Safety-Kleen will keep on file at the facility this written statement certifying the design and installation plan of the tank system in accordance with the requirements of paragraphs (b) through (f) of 40 CFR 264.192 that attest that the tank system was properly designed and that repairs, pursuant to paragraphs (b) and (d) will be performed. These written statements also include the certification statement as required in 270.11 (d) of Chapter 40 of the Code of Federal Regulations.

40 CFR 264.193 (a)

This section deals with the requirement for secondary containment for the installation of new and existing tank systems. This report deals with a new tank system.

1. Secondary containment in the form of an open concrete dike vault will be provided prior to this new tank system being put into use.

2. Existing tank system: Not applicable.

3. Existing tank system: Not applicable.

4. Existing tank system: Not applicable.

5. Not applicable.

40 CFR 264.193 (b)

1. The secondary containment system must be designed, installed, and operated in a manner which will prevent the migration of wastes or accumulated liquid out of the system to the soil, ground water, or surface water at any time during the use of the system.

2. The secondary containment system must be capable of detecting and collecting releases and accumulated liquids until the collected material can be removed.

40 CFR 264.193 (c)

To meet the requirements of paragraph (b) of this section, the secondary containment system has been designed and will be constructed as follows:

1. Construction will consist of eight-inch-thick reinforced concrete walls designed and constructed to withstand the internal static head pressure gradient created by a liquid full dike vault condition, eight-inch reinforced concrete slab designed and constructed to support all tanks in a fully loaded condition and to resist soil pressures from beneath. (A copy of the wall and slab design is attached.)

The interior of the dike walls and the concrete slab will be coated with two coats of Semstone 140 or equal. This material is resistant to physical contact with the waste liquids being stored, to climatic conditions and to traffic abrasion.

2. The dike vault will be constructed on a reinforced concrete foundation system designed and built to support the secondary containment system, resistant to pressures from above and from below and resistant to settlement, compression, or uplift failures.

3. The leak detection method for this secondary containment system will consist of daily inspections of the dike containment vault. All elements of this vault will be open and plainly visible. The bottom of the tank will be raised and visible for inspection. This will meet the 24-hour leak-detection requirement.

4. The concrete slab will be gently sloped to a central collection sump pit. No drain will be provided out of his pit. In the event of a waste spill, this material will be removed from the secondary containment area and placed in primary containment for future handling within the required 24-hour period using portable pumps.

40 CFR 264.193 (d) (e)

This section deals specifically with the secondary containment method chosen.

1. A liner (external to the tank): Not applicable.

2. A vault: This was the method chosen.

3. A double-walled tank: Not applicable.

4. An equivalent device approved by the Regional Administrator: Not applicable.

The following discussion will deal solely with the secondary containment chosen, the concrete dike vault:

2. The vault system:

- Has been designed and will be constructed to contain a minimum of 100 percent of the contents of the largest tank within the dike vault system.

- Has been designed and will be constructed with sufficient additional capacity to contain precipitation from a 25-year, 24-hour rainfall event. This has been done but it is not applicable as this will be a covered dike.

- Will be provided with two coats of Semstone 140 or equal on the interior dike walls and concrete slab as explained earlier under 40 CFR 264.193 (c) (1).

- Will be provided with mechanical ventilation to protect against the formation of and ignition of vapors within the dike vault. The vault will be inspected by Safety-Kleen personnel on a daily basis. All electrical systems have been designed and will be constructed Class I, Division 2 Explosion-Proof.

- The concrete dike vault system will not be subject to hydraulic pressure as it is constructed above ground.

40 CFR 264.193 (f)

This section deals with secondary containment requirements for ancillary equipment.

1. All above ground piping within the concrete dike vault area will be inspected for leaks by Safety-Kleen personnel on a daily basis. This piping will be provided with the secondary containment of the concrete dike vault itself.

2. All above ground piping outside of the concrete dike vault will be inspected for leaks by Safety-Kleen personnel on a daily basis. This piping will have fully welded connections and, therefore, will not require secondary containment.

3. All pumps will be inspected by Safety-Kleen personnel on a daily basis. All pumps will be installed within the secondary containment areas.

4. This item covered by items 1, 2, and 3 above.

40 CFR 264.193 (g)

This section is not applicable as a variance from these requirements is not being applied for.

40 CFR 264.193 (h)

This section is not applicable as a variance from these requirements is not being applied for.

CONCLUSION

In view of all the topics discussed above, it is concluded that the design and installation plan of Safety-Kleen's new aboveground hazardous waste storage tanks system and secondary containment for used ethylene glycol at the Medley, Florida Service Center is in full compliance with Chapter 40 of the Code of Federal Regulations, Section 264.192 and Section 264.193.

Respectfully submitted,

ERM-SOUTH, INC.

Victor E. Hiatt

Victor E. Hiatt, P.E.
Florida Professional Engineer License Number PE26787

ksc/bai

Enclosure(s)

c: J. Krevic - Safety-Kleen
C. Norton - ERM

Victor E. Hiatt
1/9/92

The ERM Group

ERM-South, Inc.
Environmental Resources Management

Project MEDLEY, FL W.O. No. 13112.21 Sheet 1 of 3
Subject PRECONSTRUCTION TANK ASSESSMENT By VEH Date 12/14/91
Chkd by MSH Date 12/24/91

GRAVITY LOADS

REF: S-K DRAWING 9010

TANK WEIGHT $D = 12$ FT $T1 = 0.25$ IN $H1 = 18$ FT
$T2 = 0.188$ IN $H2 = 6$ FT
ASSUME WT = 490 LB/FT³

SHELL WT (18 FT): $\pi \cdot D \cdot H \cdot T1 \cdot W$
$(3.14)(12\text{ FT})(18\text{ FT})\left(\frac{0.25''}{12}\right)\left(490\frac{LB}{FT^3}\right) = 6923.7$ LBS

(6 FT): $(3.14)(12\text{ FT})(6\text{ FT})\left(\frac{0.188}{12}\right)\left(490\frac{LB}{FT^3}\right) = 1735.5$ LBS

BOTTOM: $\frac{\pi D^2}{4} \cdot T1 \cdot W$
$\frac{(3.14)(12)^2}{4}\left(\frac{0.25}{12}\right)\left(490\frac{LB}{FT^3}\right) = 1154$ LBS

SKIRT: $\pi\ D\ H\ (2\text{ FT}) \cdot W \cdot$ SKIRT THICKNESS
$(3.14)(12)(2\text{ FT})\left(490\frac{LBS}{FT^3}\right)\left(\frac{0.376}{12}\right) = 1157$ LBS

BASE: $\left(\frac{\pi D^2}{4} - \frac{\pi D_2^2}{4}\right)\left(\frac{0.376}{12}\right) \cdot W$
$\left(\frac{3.14(12\frac{1}{12})^2}{4} - \frac{3.14(12-\frac{3}{12})^2}{4}\right)\left(\frac{0.5}{12}\right) 490\frac{LBS}{FT^3} =$
$(114.6 - 110)(.042)(490) = 95$ LBS

TOP: $\frac{(3.14)(12)^2}{4}\left(\frac{0.188''}{12}\right)\left(490\ LBS/FT^3\right) = 867.8$ lbs

TOTAL TANK WEIGHT = 11,932.7 LBS

WEIGHT OF CONTENTS: SG = 1.1135 density$_{WATER}$ = 62.4 LB/FT³
V = 20000 GAL

$$\text{WEIGHT} = \frac{(20{,}000\text{ gal})\left(62.4\frac{LB}{FT^3}\right)(1.1135)}{\left(7.48\frac{GAL}{FT^3}\right)}$$

= 185,781.8 LBS

TOTAL WEIGHT, TANK & CONTENTS

= 11,932.7 LBS + 185,781.8 LBS

= 197,714.5 LBS

ERM-South, Inc.
Environmental Resources Management

Project MEDLEY, FL W.O. No. 13112.21 Sheet 2 of 3
Subject PRECONSTRUCTION TANK ASSESSMENT By YEH Date 12/14/91
Chkd by MSH Date 12/24/91

SUPPORT STRENGTH CALCULATIONS

REF: S-K DRAWING 309702-5001-00 11/6/90
C10262 2/27/90

FACTORED DEAD LOAD = (1.4)(197,714.5 LBS) = 276,800.3 LBS

BEARING ON CONCRETE:

3" FLANGE BEARING AREA $= \frac{\pi D_1^2}{4} - \frac{\pi D_2^2}{4}$

$= \frac{(3.14)(12\frac{1}{2})^2}{4} - \frac{(3.14)(12-\frac{3}{2})^2}{4}$

$= 4.6\ FT^2$

BEARING STRESS $= \frac{276{,}800.3\ LBS}{4.6\ FT^2\ \frac{144\ IN^2}{FT^2}} = 417.9\ \frac{LBS}{IN^2}$

f_c = COMPRESSION STRENGTH OF CONCRETE REQUIRED TO BE 4000 $\frac{LBS}{IN^2}$

ϕ = STRENGTH REDUCTION FACTOR = 0.7

ALLOWABLE BEARING STRENGTH (INCLUDING SAFETY FACTOR)

$f_{b_a} = (\phi)(.85)(f_c) = (.7)(.85)(4000) = 2380\ \frac{LBS}{IN^2}$

$\therefore\ 417.9\ \frac{LBS}{IN^2} << 2380\ \frac{LBS}{IN^2}$

CONCRETE BEARING STRENGTH IS ADEQUATE

ERM-South, Inc.
Environmental Resources Management

Project MEDLEY, FL W.O. No. 13112.21 Sheet 3 of 3
Subject PRECONSTRUCTION TANK ASSESSMENT By VEH Date 12/14/91
Chkd by MSH Date 12/24/91

CONTAINMENT CAPACITY

DIKE VOLUME = L × W × H = (56.67')(38.67')(3 FT)(7.48 GAL/FT³) = 49,176 GAL

VOLUME OF LARGEST TANK = 20,000 GAL

SLAB VOLUME (14')(14')(.67')(7.48 GAL/FT³) × 6 PADS = 5,894 GAL

VOLUME OF TANKS (ASSUMING TANK SKIRTS EFFECTIVELY PRECLUDE USE OF SPACE UNDERNEATH THE TANKS)

$V = \pi r^2 h = (3.14)(6')^2 (2.33')(7.48 \frac{GAL}{FT^3})(6 \text{ TANKS}) = 11,821 \text{ GAL}$

RAINFALL: 25 YEAR 24 HOUR EVENT = 10"

$V = (56.67')(38.67')(10/12 \text{ FT})(7.48 \frac{GAL}{FT^3}) = 13,660 \text{ GAL}$

EXCESS VOLUME = 49,176 − 20,000 − 5894 − 11821 − 13660 = −2199 GAL

NEW VOLUME REQUIRED = 49,176 + 2199 = 51,375 GAL

DIKE VOLUME = L W H

$51,375 = (56.67')(38.67)(X \text{ FT})(7.48 \frac{GAL}{FT^3})$

X = 3.134 FT ≈ 3 FT 2 IN = REQUIRED DIKE WALL HEIGHT

ERM-South, Inc.
Environmental Resources Management

Project S-K Medley
Subject TANK FARM ASSESSMENT

W.O. No. 13112.21 (15) Sheet 1 of 5
By MSH Date 12/23/91
Chkd by [illegible] Date 12/24/91

OBJECTIVE: DETERMINE IF TANK FARM CONTAINMENT WALL IS ADEQUATE TO CONTAIN LIQUID SPILL. LIQUID IS ASSUMED TO BE ETHYLENE GLYCOL. DRAWING NO. 309702-5001-00

ASSUMPTIONS: $f_y = 60{,}000$ psi
$f'_c = 4{,}000$ psi (GIVEN from DRAWINGS)

REFERENCE: (1) ACI 318-89
(2) Architectural and Engineering Calculations Manual
(3) Merck Index

CONCLUSION: CONTAINMENT WALL WILL WITH STAND PRESSURE FROM 38" OF ETHYLENE GLYCOL

ERM-South, Inc.
Environmental Resources Management

Project: S-K Medley
Subject: Tank Farm Assessment
W.O. No. 13112.21 Sheet 2 of 5
By MSH Date 12/23/91
Chkd by VEH Date 12/24/91

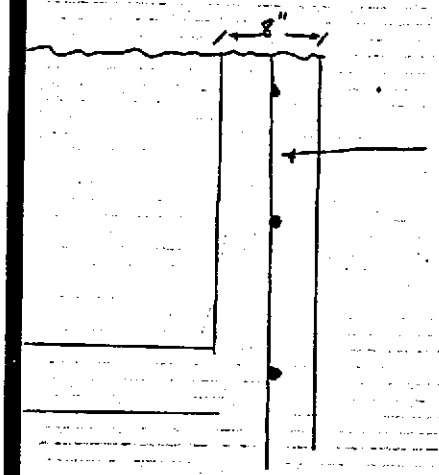

HORIZ. #5 REBAR @ 12" O.C.
VERT. #5 REBAR @ 12" O.C.

CALCULATE MOMENT ON WALL:

ASSUME ENTIRE LIQUID IS ETHYLENE GLYCOL ∴

S.G. @ 20°C = 1.1135

γ_w = 62.4 lbs/ft³ @ 20°C

$\gamma_{ETHYL\ GLYCOL}$ = 1.1135 (62.4 lbs/ft³) = 69.48 lbs/ft³

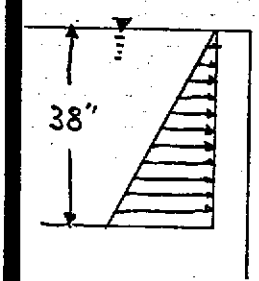

NOTE: WILL CALCULATE MOMENT FOR A 12" WIDTH

$$M = \frac{\gamma_{ETYL\ G.}\ (H)^3\ W}{6}$$

$$M = \frac{(69.48\ lbs/ft^3)\left(\frac{38"}{12"}\right)^3\left(\frac{12"}{12"}\right)}{6}$$

M_g = 367.72 ft-lbs

M_l = 4412.64 in-lbs

$M_u = \cancel{1.4 M_d}^{\,0} + 1.7 M_l$ = Required Moment Strength

M_u = 1.7 (367.72 ft-lbs)

M_u = 625.12 ft-lbs = 7501.44 in-lbs

CALCULATE THE DESIGN STRENGTH OF WALL:

$$\phi M_n = \phi \left[A_s f_y \left(d - \frac{a}{2} \right) \right]$$ 318/318R-91

WHERE:

ϕ = STRENGTH REDUCTION FACTOR = 0.90 (9.3.2.1)
M_n = NOMINAL MOMENT
A_s = AREA of REINFORCEMENT
f_y = yield STRENGTH
d = DISTANCE from EXTREME COMPRESSION FIBER TO CENTROID OF TENSION REINFORCEMENT

$$a = \frac{A_s \times f_y}{0.85 \times f'_c \times d}$$

USE: f_y = 60,000 psi
f'_c = 4,000 psi
A_s = 0.31 in (#5 REBAR)
d = 4 in
ϕ = 0.9

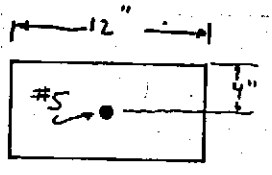

$$a = \frac{(0.31\ in^2)(60{,}000\ lbs/in^2)}{(0.85)(4{,}000\ psi)(4\ in)} = 1.37\ in.$$

$$\phi M_n = 0.9 \left[(0.31\ in)(60{,}000\ psi) \left(4\ in - \frac{1.37\ in}{2} \right) \right]$$

$$\phi M_n = 55{,}493\ in\text{-}lbs$$

REQUIREMENT FOR DESIGN:

$$\phi M_n \geq M_u$$

55,493 in-lbs >>> 7501.44 in-lbs

CHECK- MINIMUM REINFORCEMENT:

$$\rho_{min} = \frac{200}{f_y} = \frac{200}{60{,}000} = 0.0033 \quad (318/318R\text{-}112)\ 10.5$$

$$\rho = \frac{A_s}{bd} = \frac{0.31\ in^2}{(4'')(12'')} = 0.0065 > 0.0033 \quad O.K.$$

CALCULATE MAXIMUM ALLOWABLE REINFORCEMENT RATIO:

$$\rho_{max} = 0.75\left(\frac{0.72\ f_c}{f_y} \times \frac{87{,}000}{87{,}000 + f_y}\right) \quad \text{(Architectural and Engineering Calcs)}$$

$$= 0.75\left(\frac{0.72\ (4000)}{60{,}000} \times \frac{87{,}000}{87{,}000 + 60{,}000}\right)$$

$$\rho_{max} = 0.0213 > 0.0065 \quad O.K.$$

ERM-South, Inc.
Environmental Resources Management

Project S-K Medley W.O. No. 13112.21 Sheet 5 of 5
Subject TANK FARM Assessment By MSH Date 12/23/91
Chkd by VEH Date 12/24/91

CHECK HORIZONTAL REINFORCEMENT:

USING GRADE 60:

$\rho_H > 0.0018$ (318/318R-79) 7.12

HORIZONTAL REINFORCEMENT IS #5 REBAR @ 12" O.C.

$$\rho = \frac{A_s}{bd} = \frac{0.31 \text{ in}^2}{(4")(12")} = 0.0065 > 0.0018 \quad \text{O.K.}$$

ERM-South, Inc.
Environmental Resources Management

Project MEDLEY, FL W.O. No. 13112.21 Sheet 1 of)
Subject PRECONSTRUCTION TANK ASSESSMENT By VEH Date 12/24/91
Chkd by MSH Date 12/24/91

BENDING MOMENT IN CONCRETE SLAB

ASSUME LOAD IS EQUALLY DISTRIBUTED AROUND 3" FLANGE

FOR A ONE FOOT LENGTH, MAXIMUM MOMENT BECOMES:

$$W_1 = \frac{265{,}424.6 \text{ LBS}}{\pi D} = \frac{265{,}424.6}{37.68} = 7{,}044 \text{ LBS}$$

$$W_{\text{MAXIMUM MOMENT}} = \frac{W1}{2} = 3522 \text{ LBS}$$

$$\text{MAXIMUM MOMENT} = M_m = W_m \frac{L}{2} = \frac{(3522)(12")}{2}$$

$$= 21{,}132 \ \frac{\text{IN-LBS}}{\text{FT}}$$

ULTIMATE MOMENT CAPACITY OF 8" SLAB:

$f'c = 4000$ psi $\quad b = 12$ in

$F_y = 60{,}000$ psi $\quad d = 4$ in

$A_s = 0.3 \text{ in}^2$

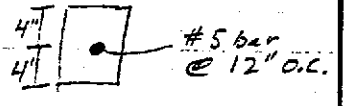

$$M_u = c\left(d - \frac{a}{2}\right) \qquad c = A_s \times f_y \qquad a = \frac{A_s \times f_y}{(.85)(f'c)(b)}$$

$$c = (0.3 \text{ in}^2)(60000 \tfrac{\text{lb}}{\text{in}^2}) = 18{,}000 \qquad = \frac{18{,}000}{(.85)(4000)(12 \text{ in})} = 0.44 \text{ in}$$

$$M_u = 18{,}000\left(4 - \frac{.44}{2}\right)$$
$$= 18\,000\,(3.78)$$
$$= 68{,}040 \text{ in-lbs}$$

$\text{Moment}_{max} < \text{Moment}_{ultimate}$ ∴ satisfactory

21,132 in-lbs < 68,040 in-lbs

CHECK MINIMUM REINFORCEMENT:

$$\rho_{MIN} = \frac{200}{f_y} = \frac{200}{60{,}000} = 0.0033 \qquad \text{ACI } 10.5 \ (318/318R\text{-}112)$$

$$\rho_{ACT} = \frac{A_s}{bd} = \frac{0.31 \text{ in}^2}{(4")(12")} = 0.0065 > 0.0033 \qquad \text{O.K.}$$

ERM-South, Inc.
Environmental Resources Management

Project: SK Medley — W.O. No. 13112.21 — Sheet 1 of 1
Subject: Soil Bearing Pressure — By MSH — Date 12/24/91
Chkd by VEA — Date 12/30/91

CHECK SOIL PRESSURE:

TYPICALLY, 2500 lbs/ft² IS USED AS THE ALLOWABLE SOIL BEARING PRESSURE.

TANK SKIRT IS 12 ft. IN DIAMETER

$C = \pi d = \pi(12) = 37.7$ ft

TOTAL WEIGHT (FACTORED) = 276,800.3 lbs

WEIGHT PER FOOT = 7342.2 lbs/ft

ASSUME THAT THIS ACTS OVER A ONE SQUARE FOOT AREA:

$$\text{PRESSURE ON CONCRETE} = \frac{7342.2 \text{ lbs}}{\text{ft}^2} \cdot \frac{\text{ft}^2}{144 \text{ in}^2}$$

$$= 51.0 \text{ psi}$$

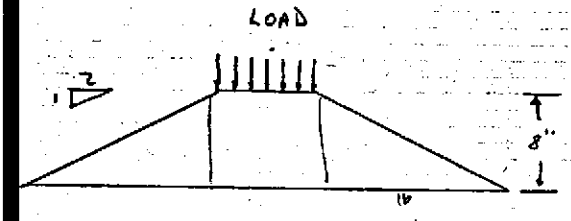

WEIGHT OF CONCRETE = 145 #/ft³

VOLUME OF FRUSTUM OF PYRAMID (AREA OF INFLUENCE)

$$V = \frac{h}{3}\left(A_1 + A_2 + \sqrt{A_1 A_2}\right)$$

WHERE:
h = height (8")
A_1 = LARGE AREA
A_2 = SMALL AREA

$A_2 = 1 \text{ ft}^2$

$A_1 = \left[\left(\frac{8''}{12''}\right)(2) + \left(\frac{8''}{12''}\right)(2) + \left(\frac{12}{12}\right)\right]^2$

$A_1 = 13.44 \text{ ft}^2$

$$V = \frac{\left(\frac{8''}{12}\right)}{3}\left(13.44 \text{ ft}^2 + 1 \text{ ft}^2 + \sqrt{(1)(13.44)}\right)$$

$V = 4.024 \text{ ft}^3$

$$\text{BEARING PRESSURE} = \frac{(51 \text{ \#/in}^2)(144 \text{ in}^2/\text{ft}^2) + (4.024 \text{ ft}^3)(145 \text{ \#/ft}^3)}{13.44 \text{ ft}^2}$$

BEARING PRESSURE = 589.7 lbs/ft² < 2500 #/ft² O.K.

MARK	QTY.	SIZE	DESCRIPTION
K	4	6"	PORT HOLE
J	2		SIDE LIFT LUG
H	4		< 3"x3"x3\8"x3"LONG
G	2		LIFT LUG
F	2	4"	FULL COUPLING
E	3	4"	FULL COUPLING
D	4	4"	FULL COUPLING
C	1	4"	HALF COUPLING
B	1	24"	SHELL MANWAY (24 BOLT PATTERN)
A	1	24"	ROOF MANWAY W\12 EA. 1\2"x4" LONG SHOULDER BOLTS

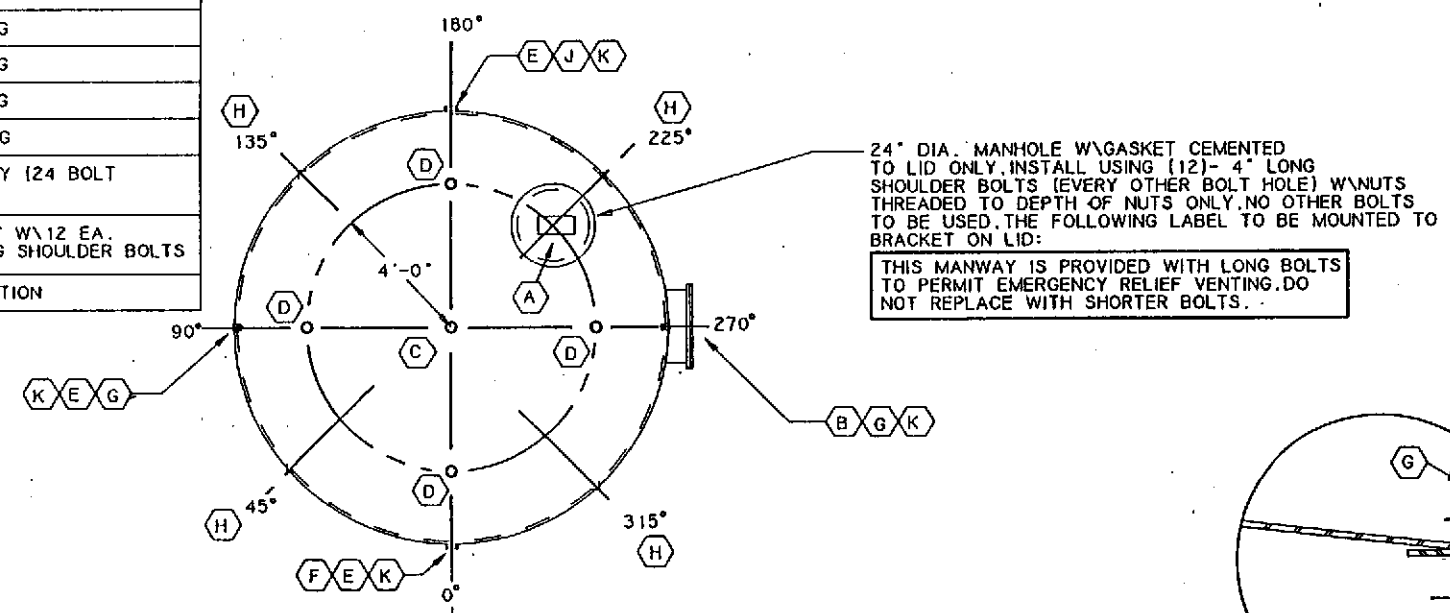

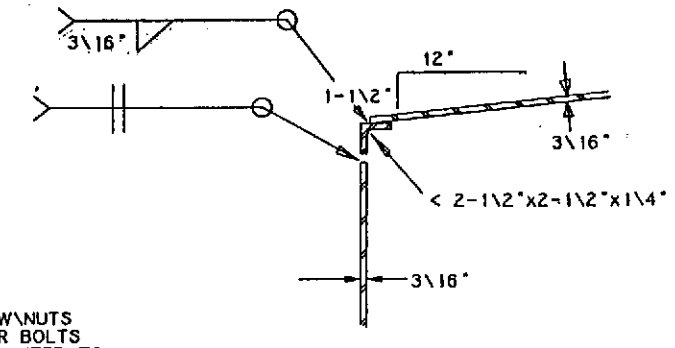

SHELL TO ROOF CONNECTION

SCALE: 1-1\2"=1'-0"

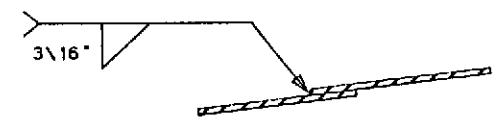

ROOF SEAM DETAIL

SCALE: 1-1\2"=1'-0"

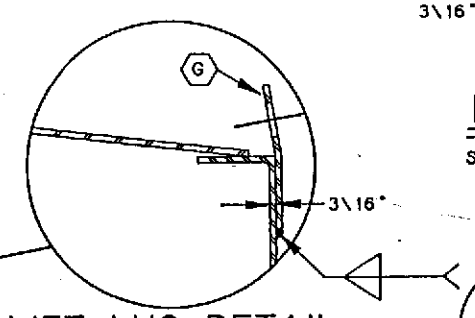

LIFT LUG DETAIL

SCALE: 1-1\2"=1'-0"

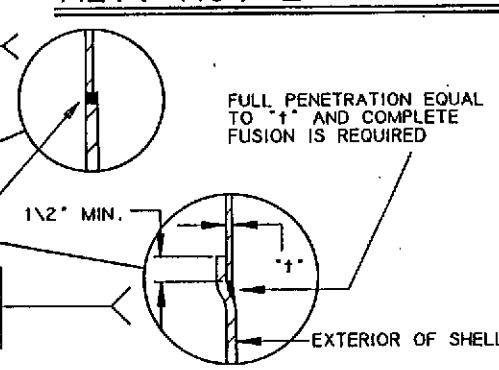

ALT. NO. 2 JOINT WELD

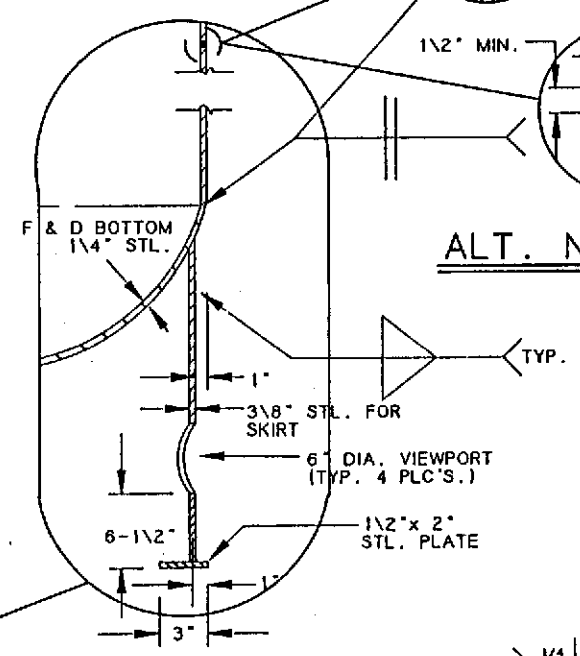

ALT. NO. 1 JOINT WELD

TANK SKIRT DETAILS

SCALE: 1-1\2"=1'-0"

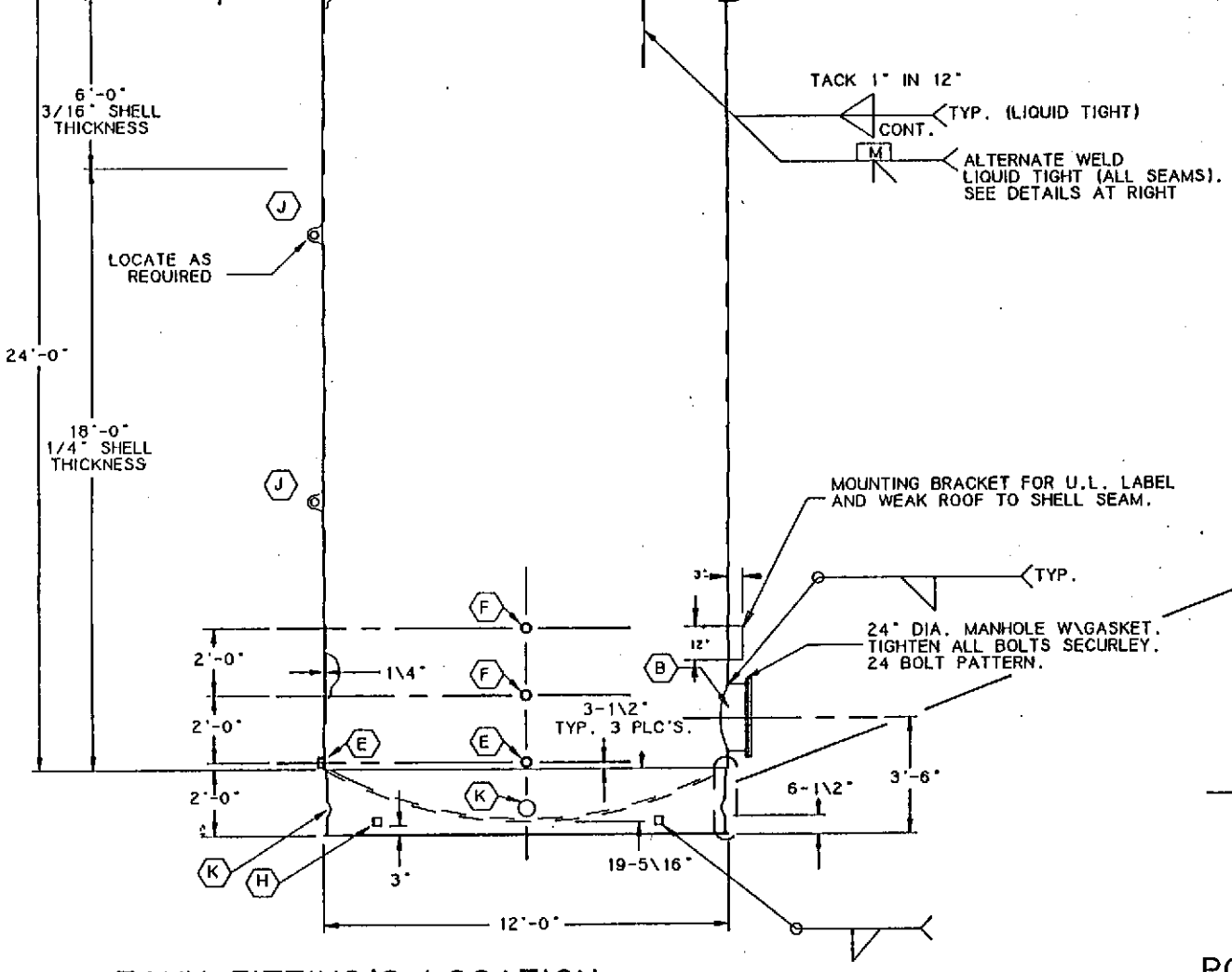

TANK FITTING'S LOCATION

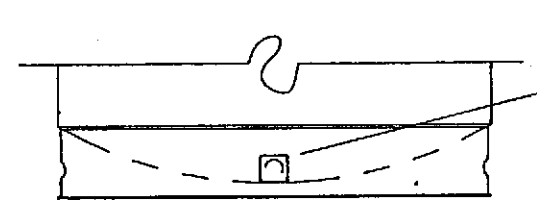

PORT HOLE COVER DETAILS

SCALE: 3\8"=1'-0"

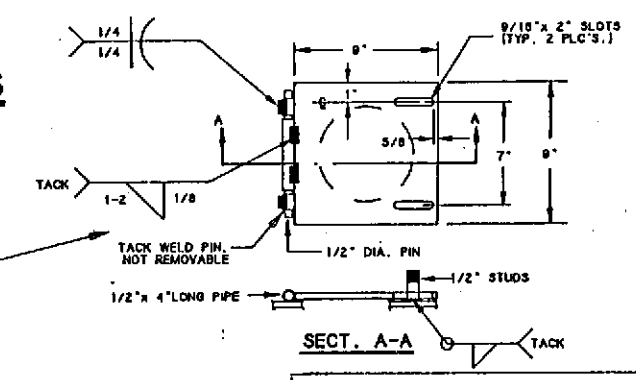

SECT. A-A

GENERAL NOTES

1) TEST PRESSURE TO BE 1-1\2 PSI AIR MIN. & 5 PSI MAX.

2) CONSTRUCTION TO MEET "UNDERWRITERS LABORATORIES" REQUIREMENTS AND BE SO LABELED

3) ALL PERTINENT SAFETY REGULATIONS, BOTH THE OWNER'S & "OSHA,S", SHALL BE ADHERED TO RIGIDLY. IN ADDITION, ALL SAFETY PRECAUTIONS NOTED ON THE MANFACTURER'S PRODUCT DATA SHEETS AND LABELS SHALL BE OBSERVED FOR BOTH MATERIAL AND EQUIPMENT.

4) INITALLY ALL SURFACES TO BE COATED SHALL BE PREPARED IN A WORKMANLIKE MANNER WITH THE OBJECTIVE OF OBTAINING A CLEAN, DRY AND PROPERLY PREPARED SUBSTRATE.

5) BEFORE ANY SURFACE IS COATED, IT SHALL BE CLEANED CAREFULLY OF ALL DUST, DIRT, GREASE, LOOSE RUST, MILL SCALE, OLD PAINT, ETC.

6) ALL COATINGS SHALL BE APPLIED IN A WORKMANLIKE MANNER TO ACHIEVE THE SPECIFIED DRY MIL FILM BUILD, LEAVING A SMOOTH UNIFORM APPEARING FILM. SPRAY APPLICATION SHALL BE USED WHEREVER POSSIBLE.

7) THE APPLICATION SHALL LEAVE NO SAGS, BRUSH MARKS OR OTHER DEFECTS.

8) CLEAN-UP AND REMOVE ALL SAND AND DEBRIS FROM THE JOB WHEN COMPLETE.

9) SUPPORTING SKIRT SHALL BE PROTECTED BY MATERIALS HAVING A FIRE RESISTANCE RATING OF NOT LESS THAN 2 HRS. FIREPROOFING MATERIAL SHALL BE "ALBI CLAD 800", MANUFACTURED BY ALBI MFG., A DIVISION OF STAN CHEM, INC. OF EAST BERLIN, CT. OR APPROVED EQUAL BY THE OWNER.MATERIAL SHALL BE APPLIED IN STRICT ACCORDANCE WITH MFR'S. SPECIFICATIONS. FIREPROOFING SHALL BE INSTALLED IN FIELD BY OWNER

10) THE BOTTOM SHALL FLANGED & DISHED.THE DISH RADIUS SHALL EQUAL THE DIAMETER OF THE TANK & THE KNUCKLE RADIUS NOT BE LESS THAN 6% OF THE DIAMETER OF THE TANK.

PAINT SPECIFICATIONS

1) SURFACE PREPARATION:

COMMERCIAL BLAST CLEANING (MINIMUM) IN ACCORDANCE WITH "Steel Structures Painting Council Surface Preparation" SPECIFICATION SSPC-SP6. WITH A PROFILE OF 1.5 - 2.0 MILS.

NOTE: MANUFACTURER'S INSTRUCTIONS MUST BE FOLLOWED WITHOUT EXCEPTION.

2) PRIMER COAT -- APPLIED SAME DAY:

APPLY ONE COAT "SHERWIN WILLIAMS ZINC CLAD III", 3-4 MILS DRY 6-8 MILS WET. ALLOW TO DRY 24 HOURS. (ZINC CLAD III IS AN EPOXY ZINC CONSISTING OF 3 PARTS: BINDER PART A #B69A3, CATALYST PART B #69V13 AND ZINC DUST PART F #B69D111).

3) INTERMEDIATE COAT:

APPLY ONE COAT "SHERWIN WILLIAMS DTM" ACRYLIC GLOSS, B66 SERIES, COLOR NO. MC-64 SILVERY (LIGHT GREY) 3-4 MILS DRY, 8-10 MILS WET. (THIS IS CONTRASTING COLOR TO FINISH COAT). ALLOW TO DRY OVERNIGHT.

4) FINISH COAT:

APPLY ONE COAT "SHERWIN WILLIAMS DTM" ACRYLIC GLOSS, B66W101 (WHITE) SERIES, 3-4 MILS DRY, 8-10 MILS WET IN SELECTED COLOR.

NOTE:

COATING SYSTEM 1 REQUIRES MINIMUM SURFACE AND MATERIAL TEMPERATURES OF 50° - 55°F FOR PROPER CURING/DRYING. DO NOT APPLY OVER MOISTURE OF CONDENSATION.

NO.	DESCRIPTION	BY	CHKD	APPR	DATE
12	DWG. # WAS D13013 ADDED NOTES RE: MANWAY MOUNTING	RD			2/12/
11	ADDED NOTES 3 THRU 8; ADDED PAINT SPEC. ADDITIONAL INFO.; RMV'D. MARK L	RD			8/2/
10	REVISED & REDRAWN ON COMPUTER	RD			5\22\
9	MISC. REVISIONS	CB			3\89
8	ADDED NOTES	CS			2\17\
7	ADDED NOTES	CS			2\17\
6	ADDED NOTE 6	CS			1\30\
5	ADDED & CHANGED DETAILS, NOTES	RLB			2\1\3
4	ADDED & CHANGED DETAILS; REMOVED NOTE 6	RLB			1\23\
3	ADDED DETAIL 'A' & NOTES 5 & 6	RD			9\12\
2	REVISED & REDRAWN	RD			8\22\
1	RMV'D. 12K - 15K GAL. REF.	RD			3\10\

REVISIONS

TITLE

20,000 GAL. 12'-0"
F. & D. TANK
FABRICATION DETAILS

SAFETY-KLEEN CORP.
777 BIG TIMBER ROAD; ELGIN, ILLINOIS 60120 PHONE 312/697-8460

PROJ. ENG. APPR.	OPERATIONS APPR.	SCALE	DRAWN	DATE
		AS NOTED	RD	4\15\8

BRANCH: FOR BRANCH CON-

DRAWING NO. 9010

REV. 1

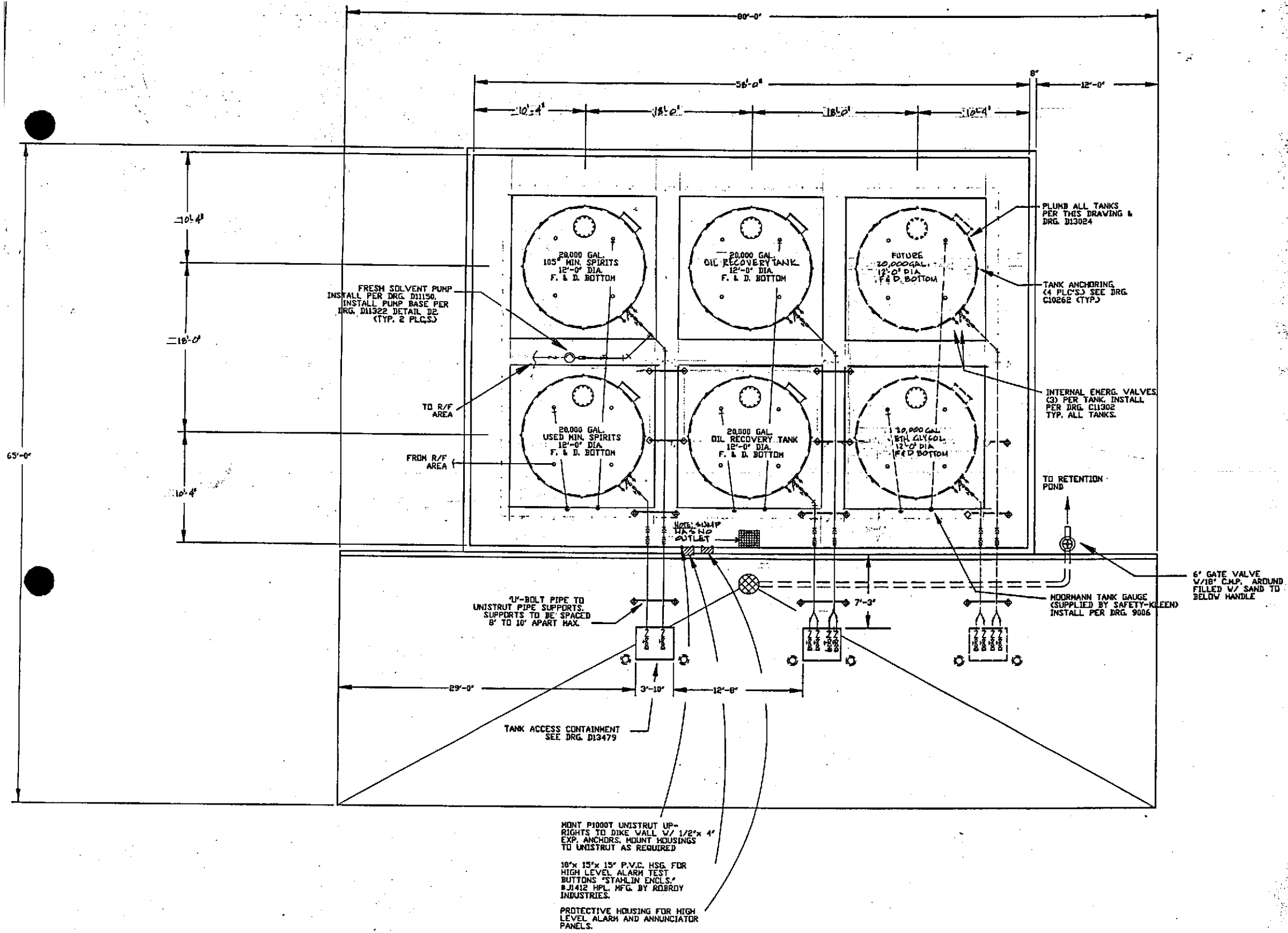

PRELIMINARY

NO.	DESCRIPTION	BY	CHKD	APPR	DATE
04	MADE SITE-SPECIFIC	MP			1-17-90
03	REVISED SECT. ORIENTATION	RD			12/3/89
02	REV'D. SECT & CALCS.	RD			10/3/89
01	MOVED TANKER ACCESS POINTS	RD			8/24/89

REVISIONS

TITLE: 6-PACK TANKFARM

SAFETY-KLEEN CORP.
777 SOUTH THIRD ROAD ELGIN, ILLINOIS 60120 PHONE 312/697-8460

FIELD ENG. APPR.	OPERATIONS APPR.	SCALE	DRAWN	DATE
		3/16"=1'-0"	RD	7/26/

BRANCH: MIAMI, FL

DRAWING NO. 009702/2001

ATTACHMENT II.C.7

TANK SYSTEM SECONDARY CONTAINMENT

ATTACHMENT II.C.7
TANK SYSTEM SECONDARY CONTAINMENT

TANK FARM CONTAINMENT

All tanks will be aboveground, underlain by a 56' x 40' x 8" concrete slab, surrounded by a 36-inch high concrete dike and covered by a roof. The exact dimensions may vary during the final construction. The dike will be sealed with a chemical resistant coating which is currently under selection. No surface run-on or precipitation would be in contact with the wastes stored in the tank farm and no run-off collection and management system is deemed necessary. The layout of the tank storage farm is provided in Figure II.C.7-1. Containment calculations are in Figure II.C.7-2.

RETURN/FILL CONTAINMENT

The return/fill shelter will be located inside the center portion of the main building. The floor will be sloped to a containment trench located in the center of the return/fill shelter. The entire area will be coated with a chemical resistant coating which is currently under selection. The barrel washers will be on a raised grating which measures 54'4" x 78'8" (Figure II.C.7-3).

The exact location of the barrel washers may change. The optimum location on the raised grating is still being evaluated.

The area will be designed such that the route trucks can be backed inside the building and the garage doors shut so that no precipitation can get into the return/fill shelter containment area. The containment capacity for the return/fill area is 3,680 gallons which exceeds the storage capacity of the two dumpsters (504 gallons per dumpster). The containment calculations are presented in Figure II.C.7-4.

Figure II.C.7-1
Tank Farm
Safety-Kleen Corp. Facility
Medley, Florida

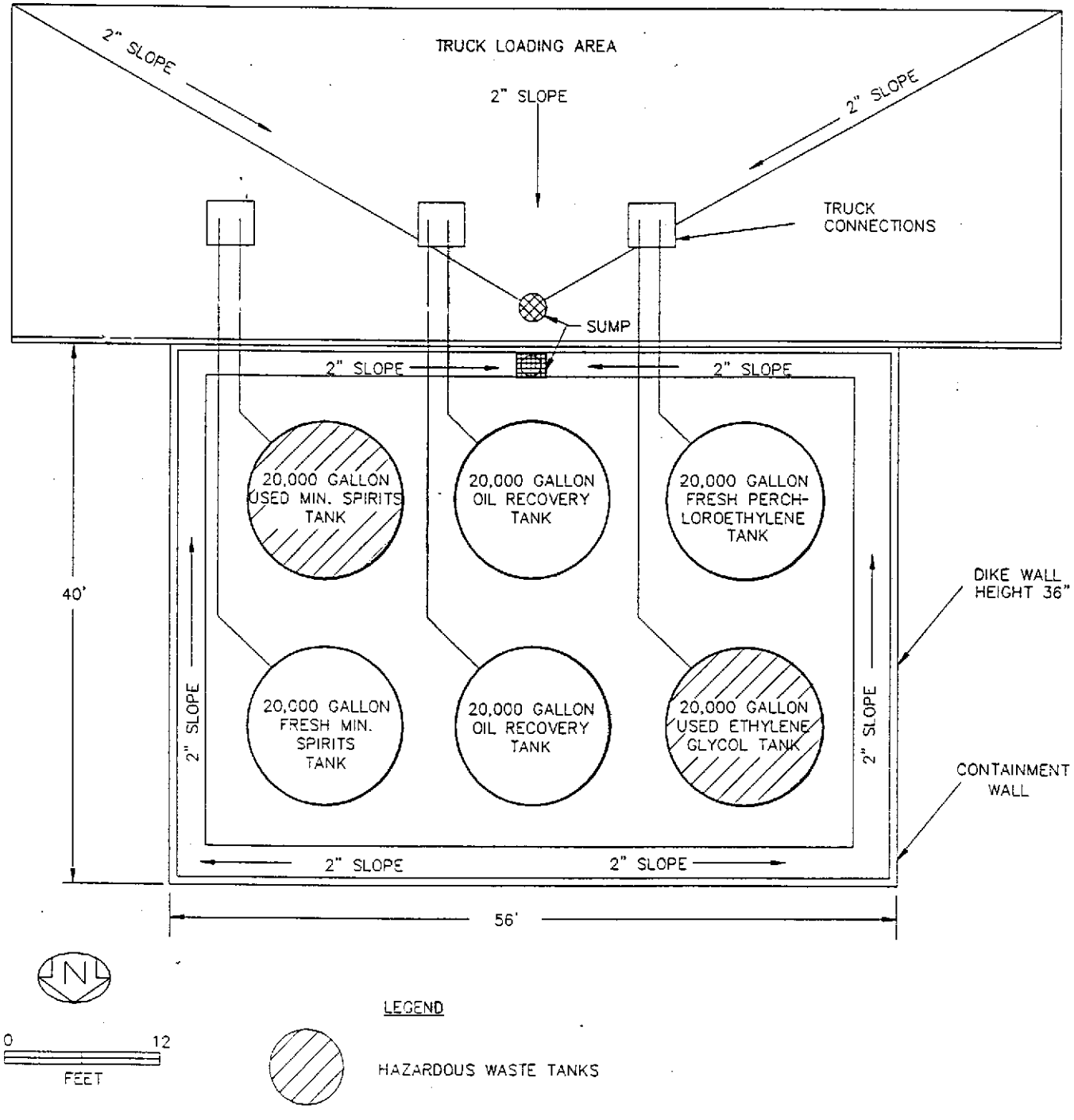

NOTE: ENTIRE AREA IS CONCRETE

ERM-South, Inc.
Environmental Resources Management

FIGURE II.C.7-2

Project SK Medley W.O. No. 13112.21 Sheet 1 of 3
Subject Containment Volume Calculations By MCB Date 6/13/91
Chkd by VEH Date 1/28/92

DETERMINE: IS DIKE VOLUME ADEQUATE TO CONTAIN A SPILL FROM A 20,000 GAL. TANK.

GIVEN:
TANK AREA LAYOUT

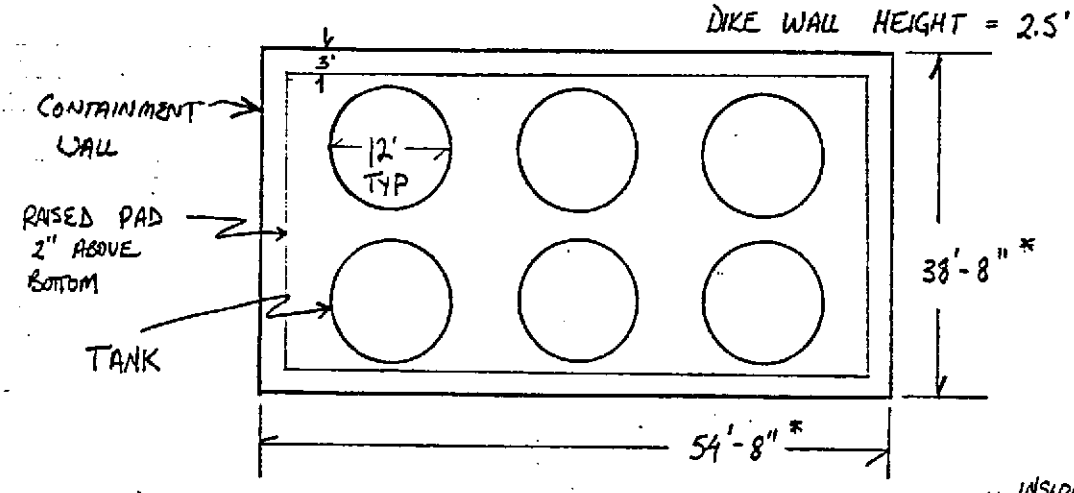

* INSIDE DIMENSIONS OF CONTAINMENT AREA.

METHOD: CALCULATE CONTAINMENT VOLUME AND SUBTRACT THE VOLUME OCCUPIED BY 5 TANKS AND THE VOLUME OF RAINWATER FROM A 25 YEAR/24 HOUR STORM.

— ASSUME THE TANKS WILL EXTEND TO THE CONTAINMENT SLAB. THIS IS A CONSERVATIVE ESTIMATE WHICH RESULTS IN LESS AVAILABLE VOLUME THAN IF THE TANK SKIDS WERE TAKEN INTO ACCOUNT.

DIKE VOLUME:

$$(54.67')(38.67')(2.5') = 5{,}285\ ft^3$$

TANK VOLUMES:

$$(5)(12')^2(\pi/4)(2.5') = 1{,}414\ ft^3$$

RAIN WATER VOLUME:

WILL USE 9" AS 25 YEAR/24 HOUR RAINFALL AMOUNT: FDOT DRAINAGE MANUAL, 1987.

$$(9/12')(54.67')(38.67') = 1{,}586\ ft^3$$

THEREFORE, IF ONE TANK SHOULD RUPTURE, IS THERE ENOUGH CONTAINMENT VOLUME TO RETAIN THE LIQUID?

DIKE VOLUME − TANK VOLUMES − RAIN WATER VOLUME

$5{,}285\ ft^3 - 1{,}414\ ft^3 - 1{,}586\ ft^3 = 2{,}285\ ft^3$

$\therefore\ 2{,}285\ ft^3 \times 7.48\ GAL/ft^3 = 17{,}092$ GALLONS

20,000 GALLONS = TANK VOLUME > 17,092 GALLONS = AVAILABLE VOLUME

∴ NEED MORE AVAILABLE VOLUME.

IF DIKE WALL = 3.0',

DIKE VOLUME:

$(54.67')(38.67')(3.0') = 6{,}342\ ft^3$

TANK VOLUMES:

$(5)(12')^2(\pi/4)(3.0') = 1{,}696\ ft^3$

RAIN WATER VOLUME:

SAME AS ABOVE

$6{,}342\ ft^3 - 1{,}696\ ft^3 - 1{,}586\ ft^3 = 3{,}060\ ft^3 = 22{,}889$ GALLONS

20,000 GALLONS = TANK VOLUME < 22,889 GALLONS = AVAILABLE VOLUME

∴ 3' DIKE WALL IS SUFFICIENT FOR CONTAINMENT PURPOSES

ERM-South, Inc.
Environmental Resources Management

FIGURE II.C.7-2(CONT.)

Project 5K Medley W.O. No. 13112.21 Sheet 3 of 3
Subject Containment Volume Calculations By MCB Date 6/13/91
Chkd by VEH Date 1/28/92

DETERMINE VOLUME OCCUPIED BY RAISED PAD INSIDE CONTAINMENT AREA:

$[(54.67' - 2(3')) \times (38.67' - 2(3')) \times 3/12] = 265\ ft^3 = 1{,}982$ GALLONS

AVAILABLE VOLUME − RAISED PAD VOLUME = 22,889 − 1,986 = 20,903 GALS.

20,903 GALLONS > 20,000 GALLONS = TANK VOLUME

∴ 3' DIKE WALL IS SUFFICIENT

Figure II. C.7-3
Return/Fill Shelter
Safety-Kleen Corp. Facility
Medley, Florida

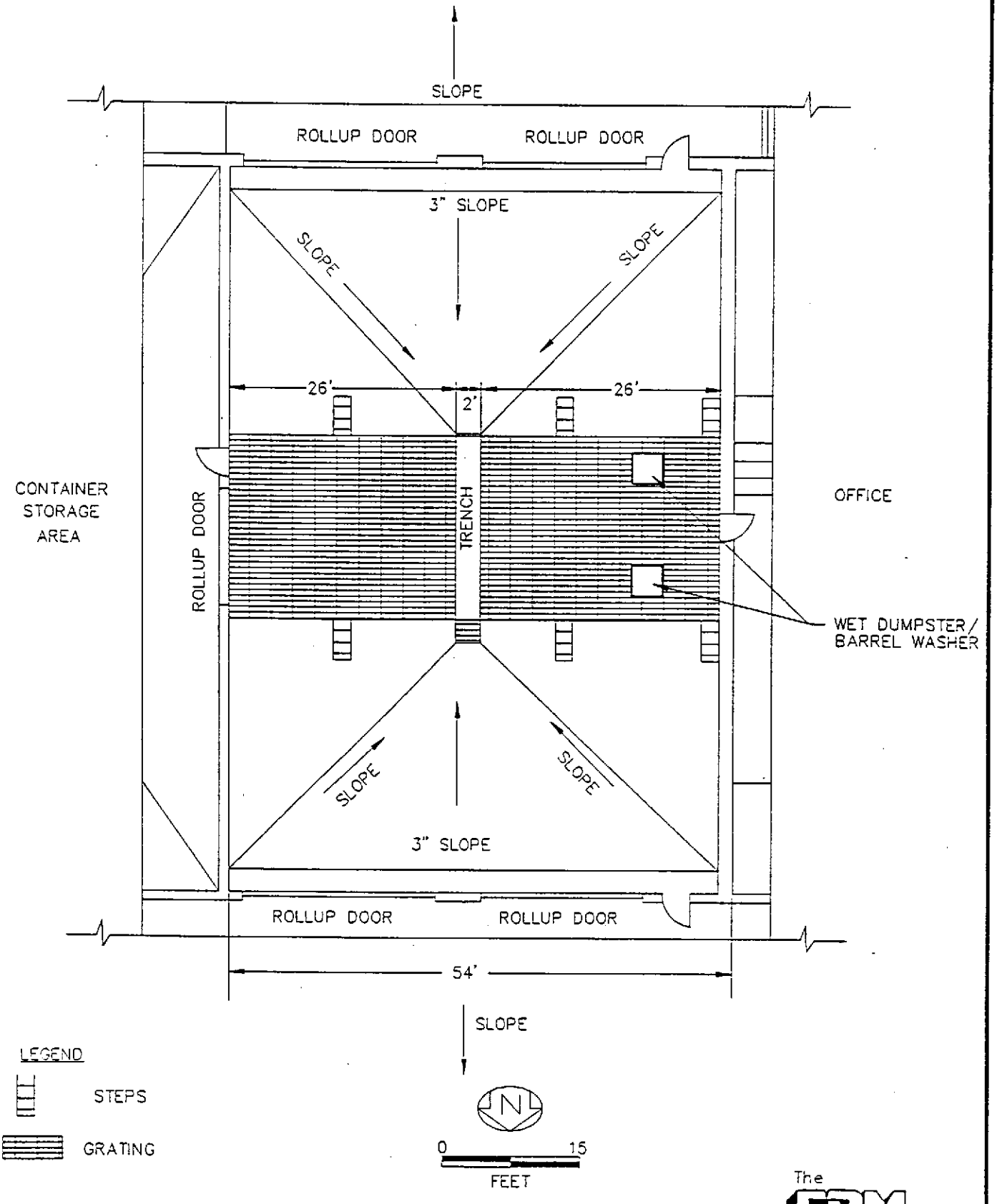

ERM-South, Inc.
Environmental Resources Management

FIGURE II.C.7-4

Project: SK Medley — W.O. No. 13112.21 — Sheet 1 of 1
Subject: Containment Volume Calculations — By: MCB — Date: 6/15/91
Chkd by: VEH — Date: 1/28/92

DETERMINE: CONTAINMENT VOLUME IN RETURN/FILL AREA

GIVEN:

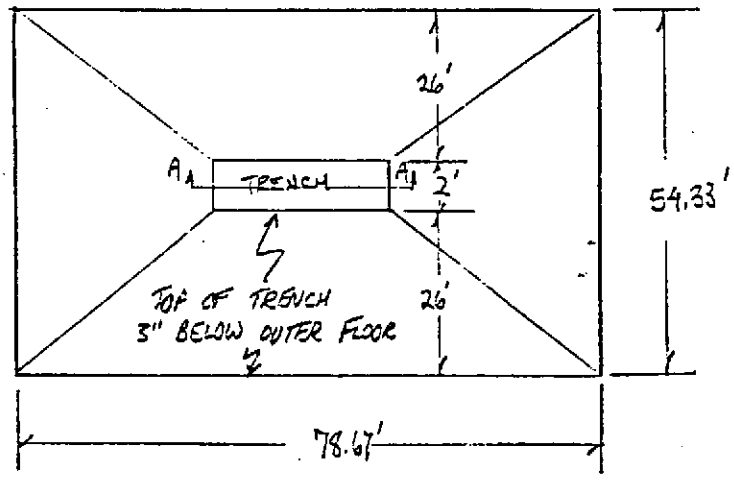

NOTE: DIMENSIONS USED WERE TAKEN FROM THE ATTACHED DRAWING PLANS, AND ARE INTERIOR ROOM DIMENSIONS

TRENCH DIMENSIONS

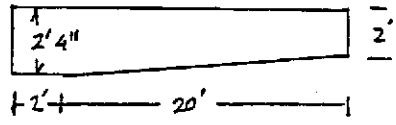

SECTION A-A

ASSUMPTIONS: ASSUME FLOOR CONFIGURATION IS SIMILAR ENOUGH TO THE FRUSTRUM OF A PYRAMID TO APPLY THE VOLUME FORMULA FOR THE FRUSTRUM.

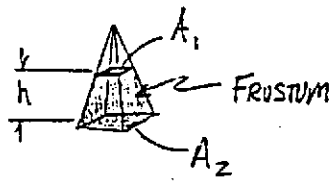

FLOOR VOLUME:

$$V = \frac{h}{3}\left(A_1 + A_2 + \sqrt{A_1 A_2}\right)$$; WHERE $h = 3''$, OR $0.25'$

$A_1 = 22' \times 2' = 44\ ft^2$

$A_2 = 54.33' \times 78.67' = 4{,}274\ ft^2$

$$V = \frac{0.25}{3}\left(44 + 4{,}274 + \sqrt{(44)(4{,}274)}\right) = 396\ ft^3 = 2{,}962\ GAL.$$

TRENCH VOLUME:

$$V = (2 \times 2 \times 2.33) + \left(20 \times 2 \times \tfrac{1}{2}(2.33 + 2)\right)$$
$$= 9.32\ ft^3 + 86.6 = 96\ ft^3 = 718\ GAL.$$

TOTAL CONTAINMENT VOLUME:

$396\ ft^3 + 96\ ft^3 = 492\ ft^3$, 3,680 GALLONS = 3,680 GAL

ATTACHMENT II.C.9

CONTROLS AND SPILL PREVENTION

ATTACHMENT II.C.9
CONTROLS AND SPILL PREVENTION

The facility includes six aboveground steel tanks. Used mineral spirits housed in containers returned from the customers will be transferred via the wet dumpster into a 20,000-gallon tank, awaiting bulk shipment to the recycle center. The other five tanks consist of one 20,000-gallon mineral spirits product tank, two 20,000-gallon nonhazardous waste oil tanks, one 20,000-gallon dry cleaning product tank, and one 20,000-gallon spent ethylene glycol tank. The two product and two waste oil tanks are not considered RCRA tanks.

Mineral spirits (petroleum naphtha) and ethylene glycol are compatible with the mild steel tank structure; in fact, mineral spirits are often used as a light hydrocarbon coating to prevent rusting of metal parts. As with all petroleum storage vessels, water will accumulate over time due to condensation. The mineral spirits have a specific gravity less than water and the water will accumulate in the bottom of the tank. Ethylene glycol and water are soluble in all proportions and no separate water plume will form in this tank. There is the potential for corrosion of the tank at the product/water interface.

Spent mineral spirits from parts washers will be accumulated in the 20,000-gallon aboveground storage tank by transfer through the return and fill station. Containers of spent solvent will be poured into the dumpsters (barrel washers) in the return and fill station, and material in the dumpster will be pumped into the storage tank for spent solvent. The return and fill station will have secondary containment.

The barrel washers will be located within the mineral spirits return and fill shelters. The drawings (Figures II.C.2-2(a) through II.C.2-2(j)) provide detail information on the barrel washers.

The barrel washer will be a totally enclosed unit. A small amount of mist will be generated while operating the unit. This will be controlled by closing the lid of the unit.

The tanks are designed and constructed to be compatible with the materials stored in them. Typical construction and installation standards for the aboveground tanks are discussed in Attachment II.C.2. All tanks are vented in accordance with National Fire Protection Association (NFPA) standards, and the tanks are equipped with high level-alarms.

Attachment II.C.1 provides for an independent assessment of the tank system to be performed upon completion of construction. The following is a concise description of the main features of the tank system.

All tanks will be aboveground, underlain by a 56' x 40' x 6" concrete slab, surrounded by a 36-inch high concrete dike and covered by a roof. Therefore, no surface run-on or precipitation would be in contact with the wastes stored in the tank farm and no run-off collection and management system will be deemed necessary. The exact dimensions of the tank farm may vary slightly during actual construction; however, any containment requirements will be adjusted accordingly. The dike will be sealed with a chemical resistant coating which is currently under selection. Level gauges (Figure II.C.2-6) will be used to measure liquid levels in tanks and float switch-activated automatic high level alarms (which consist of a strobe light and siren) will signal the tank's being 95 percent full. This alarm will allow an operator more than two minutes to stop operations and avoid overfilling the tank. In addition, the gauges of the tank must be read before filling and before and during the filling of a tanker truck (the available volume of which must be noted prior to emptying the tank) to prevent overfilling of the truck. A suction pump equipped with the tanker truck will be used to withdraw used mineral spirits from the tank. No other equipment or standby equipment will be used in the operation of the

aboveground tanks. The secondary containment under the tanks and return/fill station must be cleaned within 24 hours of a spill.

ATTACHMENT II.C.11

TANK SYSTEM INSPECTIONS

ATTACHMENT II.C.11
TANK SYSTEM INSPECTIONS

The purpose of the inspection plan is to establish a procedure and schedule for the systematic monitoring and inspection of hazardous waste management and other material management facilities to ensure proper operation and maintain compliance.

The Branch Manager or his designate will be responsible for carrying out the inspections of all hazardous waste management facilities in accordance with the following procedure and schedule.

The Branch Manager or his designate inspects the facility daily for security (gates and locks) using the inspection log (Figure II.C.11-1 or similar), and any evidence of sticking, corrosion, or uncommon activity. The facility fence will be checked weekly for deterioration, gaps under the fence, and broken wire ties. The Weekly Inspection log is shown in Figure II.C.11-2.

Figure II.C.11-3 presents the daily inspection log for the tank system. Daily inspections of tanks and dumpsters will consist of the following:

- Physically examine the tank area to verify that no leaks have occurred since the last inspection.
- Verify that no tanks have been damaged and rusted to the point of near leakage.
- Examine and verify that all tank identification, dates, loading data, hazardous waste labels are attached and current.

Daily inspections of containment will consist of the following:

FIGURE II.C.11-1

INSPECTION LOG SHEET FOR DAILY INSPECTION OF GATES AND LOCKS

Check all gates and locks for security, sticking, corrosion, lack of warning signs, or uncommon activity.

Name	Date	Time	Status

Figure II.C.11-2

INSPECTION LOG SHEET FOR: Weekly Inspection of SAFETY AND EMERGENCY EQUIPMENT, SECURITY DEVICES AND MISCELLANEOUS EQUIPMENT

INSPECTOR'S NAME/TITLE: _____

INSPECTOR'S SIGNATURE: _____

DATE OF INSPECTION (Month/Day/Year): _____

TIME OF INSPECTION: _____

SAFETY AND EMERGENCY EQUIPMENT

Fire Extinguishers: A* N

If 'N', circle appropriate problem: overdue inspection, inadequately charged, inaccessible, other: _____

Eyewash and Shower: A N

If 'N', circle appropriate problem: disconnected malfunctioning valves, inadequate pressure, inaccessible, malfunctioning drain leaking, other: _____

First Aid Kit: A N

If 'N', circle appropriate problem: inadequate inventory, other: _____

Spill Cleanup Equipment: A N

If 'N', circle appropriate problem: inadequate supply of sorbent, towels and/or clay, inadequate supply of shovels, mops, empty drums, wet/dry vacuum, other: _____

Personal Protection Equipment: A N

If 'N', circle appropriate problem: inadequate supply of aprons, gloves, glasses, respirator, other: _____

SECURITY DEVICES:

Gates and Locks: A N

If 'N', circle appropriate problem: sticking, corrosion, lack of warning signs, fit, other: _____

Fence: A N

If 'N', circle appropriate problem: broken ties, corrosion, holes, distortion, other: _____

MISCELLANEOUS EQUIPMENT:

Dry Dumpster: A N

If 'N', circle appropriate problem: rust, corrosion, split seams, distortion, deterioration, excess debris, liquids in unit, other: _____

OBSERVATIONS, COMMENTS, DATE AND NATURE OF ANY REPAIRS: _____

_____

_____

_____

_____

_____

*A = ACCEPTABLE

Figure II.C.11-3

INSPECTION LOG SHEET FOR: Daily Inspection of STORAGE TANK SYSTEM

INSPECTOR'S NAME/TITLE: _____

INSPECTOR'S SIGNATURE: _____

	MON	TUES	WED	THURS	FRI
DATE:(M/D/Y)					
TIME:					

STORAGE TANKS:
(TANKS MUST NEVER BE MORE THAN 95% FULL!)

Volume in Product Tank (in./gal.)					
Volume in Second Product Tank (in./gal.)					
Volume in Waste Tank (in./gal.)					
Volume in Second Waste Tank (in./gal.)					

Tank Exterior	A* N	A N	A N	A N	A N

If 'N', circle appropriate problem: rusty or loose anchoring, lack of grounding, wet spots, discoloration, leaks, distortion, other: _____

High Level Alarms	A N	A N	A N	A N	A N

If 'N', circle appropriate problem: malfunctioning "Power On" light, malfunctioning siren/strobe light, other: _____

Volume Gauges	A N	A N	A N	A N	A N

If 'N', circle appropriate problem: disconnected, sticking, condensation, other: _____

CONTAINMENT AREA (Tank Dike):

Bottom and Walls	A N	A N	A N	A N	A N

If 'N', circle appropriate problem: cracks, debris in dike, open drums in dike, ponding/wet spots/stains, deterioration, displacement, leaks, other: _____

Self-closing Drain Valve	A N	A N	A N	A N	A N

If 'N', circle appropriate problem: open, leaks, other: _____

Rigid Piping and Supports	A N	A N	A N	A N	A N

If 'N', circle appropriate problem: distortion, corrosion, paint failure, leaks, other: _____

OBSERVATIONS, COMMENTS, DATE AND NATURE OF ANY REPAIRS: _____

*A = ACCEPTABLE

N = NOT ACCEPTABLE

Figure II.C.11-3

INSPECTION LOG SHEET FOR: Daily Inspection of STORAGE TANK SYSTEM

INSPECTOR'S NAME/TITLE: _____

INSPECTOR'S SIGNATURE: _____

	MON	TUES	WED	THURS	FRI
TRANSFER PUMPS AND HOSES					
Pump Seals	A* N	A N	A N	A N	A N
If 'N', circle appropriate problem: leaks, other: _____					
Motors	A N	A N	A N	A N	A N
If 'N', circle appropriate problem: overheating, other: _____					
Fittings	A N	A N	A N	A N	A N
If 'N', circle appropriate problem: leaks, other: _____					
Valves	A N	A N	A N	A N	A N
If 'N', circle appropriate problem: leaks, sticking, other: _____					
Hose Connections and Fittings	A N	A N	A N	A N	A N
If 'N', circle appropriate problem: cracked, loose, leaks, other: _____					
Hose Body	A N	A N	A N	A N	A N
If'N', circle appropriate problem: crushed, cracked, thin spots, leaks, other: _____					
RETURN AND FILL STATION					
Wet Dumpster	A N	A N	A N	A N	A N
If 'N', circle appropriate problem: excess sediment buildup, leaks, rust, split seams, distortion, deterioration, excess debris, other: _____					
Secondary Containment	A N	A N	A N	A N	A N
If 'N', circle appropriate problem: excess sediment/liquid, leaks, deterioration, distortion, excess debris, other: _____					
Loading/Unloading Area	A N	A N	A N	A N	A N
If 'N', circle appropriate problem: cracks,ponding/wet spots, deterioration, other: _____					

OBSERVATIONS, COMMENTS, DATE AND NATURE OF ANY REPAIRS: _____

*A = ACCEPTABLE

- Physically examine containment areas to detect signs of deterioration and failure of the containment system such as cracks, breakage, settling, and spillage.

In addition to daily inspections, each waste tank will be inspected once every five years by a Professional Engineer registered in Florida. A general structural inspection, hydraulic test of the tank, internal inspection, and wall thickness inspection will be made.

This inspection and testing will involve withdrawal of contents, a squeegee cleaning, visual inspection and performance of hydrostatic or pneumatic test per manufacturer's instructions, or other leak detection tests. Frequency and method of future inspection and testing will be determined based upon results of prior evaluations.

ATTACHMENT II.C.12(a)

TANK SYSTEM CLOSURE PLAN

ATTACHMENT II.C.12(a)
TANK SYSTEM CLOSURE PLAN

CLOSURE INTRODUCTION

The Safety-Kleen Corp. has constructed each service center with the intent that each will be a long-term facility for the distribution of Safety-Kleen products. Based on current business and projected facility conditions, this facility is expected to remain in operation until the year 2025.

In the event that presently unforeseen circumstance(s) results in the discontinuance of operations and permanent closure or sale of the facility, the following closure plan is designed to identify the steps necessary to completely close the facility at any point during its intended life, and should be used for tanks and equipment.

It is intended that all closures will be complete and final with removal of waste and decontamination of the facility and associated equipment, in order to eliminate the need for maintenance after closure and the possibility of the escape of hazardous waste constituents into the environment.

Procedures described in this closure plan are also applicable to cleaning up spills and repairing/decontamination of the facility or equipment.

An anticipated closure schedule is presented in Figure II.C.12(a)-1. At the present time, a closure permit is required to close the facility. An anticipated maximum waste inventory for the tank system of the facility is presented in the following section.

Figure II.C.12(a)-1
Typical Closure Schedule
Safety-Kleen Corp. Facility
Medley, Florida

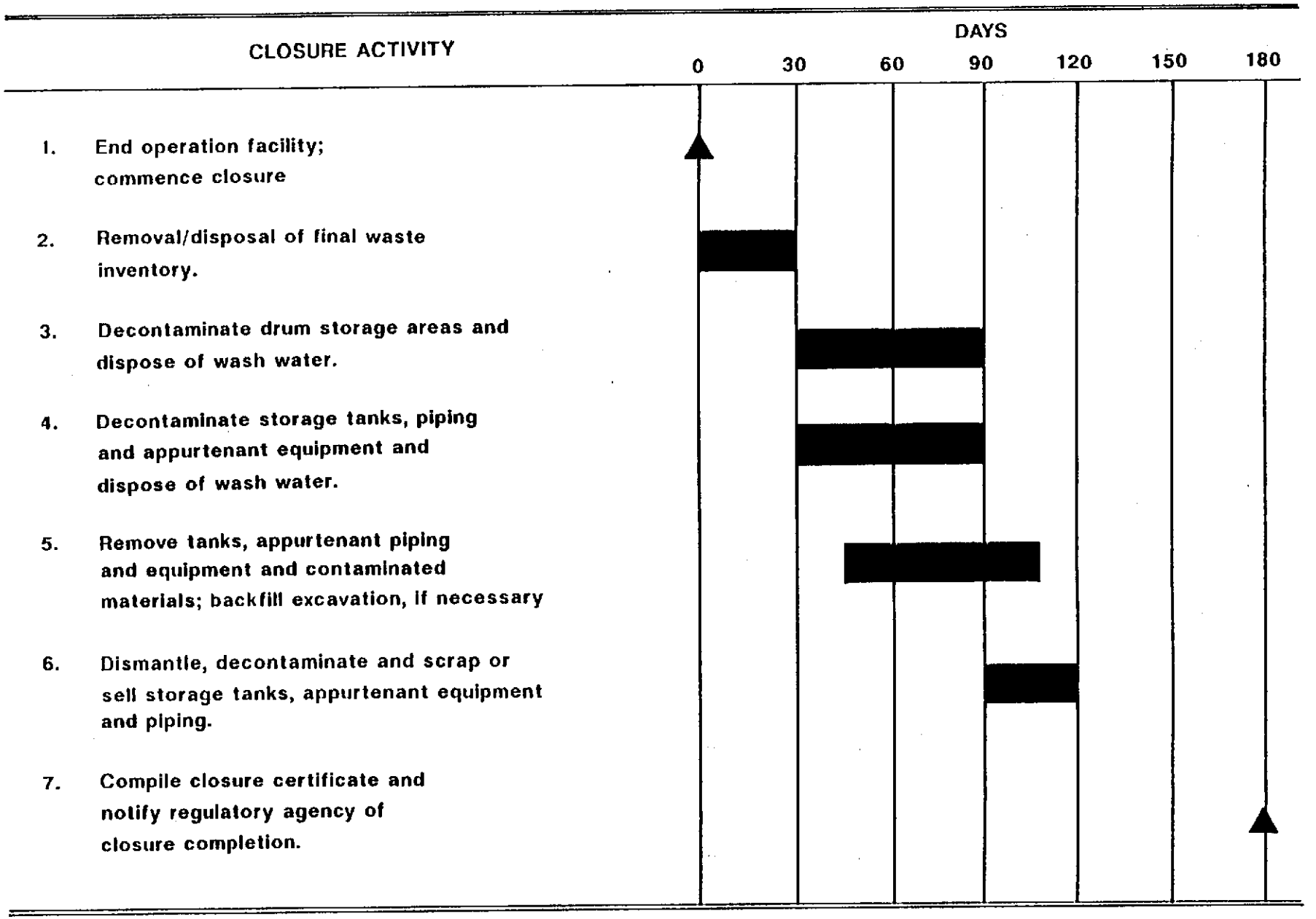

FACILITY DATA

Waste Management Facility Descriptions

The 20,000-gallon waste mineral spirits tank and a 20,000-gallon spent ethylene glycol tank will be in a 36-inch high concrete containment area.

Solvent Return/Fill Shelter Area

The Solvent Return/Fill Shelter will be a 54'4" x 78'8" structure between the two halves of the building. It will contain two dumpsters which facilitate the flow of solvent to the tank. These dumpsters are not intended for storage, but can hold a maximum of 1,008 gallons (504 gallons each).

MAXIMUM INVENTORY OF WASTE

The maximum amount of waste mineral spirits in the tank is 20,000 gallons.

The maximum amount of spent ethylene glycol in the tank is 20,000 gallons.

The maximum amount of solvent waste in the dumpsters is 1,008 gallons (two 504-gallon dumpsters).

PHASE I--OPEN THE TANK

- Access to aboveground tanks is obtained by removing man-ways.

- Prior to opening the tanks, the personnel should have full face respiratory protection and protective clothing. Once the tanks have been opened, they will be provided

with positive ventilation. The tanks will then be inspected to determine the approximate quantity and physical conditions of the remaining material.

PHASE II–REMOVING WASTE AND CLEANING TANK

- Before removing the waste from the tank, all piping and appurtenant equipment will be flushed first with clean mineral spirits followed by a detergent solution.

- The method to remove the waste material from the tanks will depend on the physical properties and quantities of that material. Prior to any person entering the tank, an effort will be made to remove as much liquid and sludge as possible.

- Subsequent to vacuuming the majority of the material from the tank, it may be necessary to use a high pressure wash system using a clean solvent and detergent solution to rinse residual material from the walls and bottom of the tanks. The evacuated material and the rinse solution will be returned to the recycle center for reclamation. The quantity of wash fluid used will be kept to a minimum in order to limit the amount of unnecessary material. The final rinsate will be analyzed for mineral spirits, volatile organic compounds, lead, and cadmium, using SW-846 to determine the effectiveness of decontamination. The tank will continue to be washed and rinsed until levels are below MCLs, or PQLs if MCLs are not available. Rinsate will be removed using a vacuum tanker truck and will be disposed of as hazardous waste. It is anticipated that approximately 2,000 gallons of rinsate will require RCRA disposal.

- Storage tanks are considered confined spaces, i.e., spaces open or closed having a limited means of egress in which poisonous gases or flammable vapors might accumulate or an oxygen deficiency might occur.

- Confined space entry requires special operating procedures:

- Tanks are to be washed, neutralized and/or purged (where flammable atmosphere is present) prior to being entered.

- Supply valves must be closed and "tagged" and bleeder valves left open, or supply piping should be disconnected.

- Pumps or motors normally activated by automatic controls shall be operated manually to be sure they have been disconnected. Instrument power switches should be tagged "OFF."

- On tanks where flammable vapors may be present, all sources of ignition must be removed.

- All tanks must be tested for flammable vapors, toxic gases, or oxygen deficiency in that order, as applicable. The results of such tests should be displayed on the job site.

  - In all tank entering situations, an Oxygen Deficiency Test shall be performed prior to tank entry.

  - Under circumstances where "hot work" (welding, burning, grinding, etc.) is to be performed in or on the vessel, a test for combustible gases shall be performed. This is referred to as a "flash test."

  - In most circumstances, flash tests and oxygen deficiency tests will be performed by the supervisor of the area in which the work is being performed.

- Under any conditions where a possibility exists (no matter how remote) of the presence of toxic vapors in the tank to be entered, the supervisor will arrange to have the air tested.

- There must be a set of wristlets or a rescue harness and sufficient rope at the job site to effect a rescue. Any other rescue equipment considered necessary must also be on the job site.

- Workers should wear a rescue harness if entering a tank with a large enough opening to easily effect a rescue. In tanks with small openings, only wristlets may be used. However, in cases where there are agitator shafts, drums, or other hazards in which the man's life-line would be entangled and the supervisor in charge feels that wearing the life-line may entrap a man and increase the hazard, the wearing of a harness or wristlets may be eliminated.

- A constant source of fresh air must be provided to ensure a complete change of air every few minutes. In cases of short-term entry for inspection or removal of objects, an air mask is recommended. In cases of long-term entry (generally for repair) the use of an air mover should be considered.

- When a ladder is required to enter a tank, the ladder must be secured and not removed while anyone is in the vessel. In cases where a rigid ladder could become an obstacle, a chain ladder may be used.

- Adequate illumination must be provided.

  - A flashlight or other battery-operated light must also be available to provide illumination for the safety exit in the event of an electrical power failure.

- Explosion-proof lighting must be used in any tank used to store flammable liquids.

- All electrical equipment to be used inside the tank must be in good repair and grounded.

- Others working in the immediate area shall be informed of the work being done and they shall inform the watcher or supervisor immediately of any unusual occurrence which may make it necessary to evacuate the tank.

- The "buddy" (standby observer) system:

  - Men working inside a confined space must be under the constant observation of a fully-instructed standby observer.

  - Before anyone enters the tank, the standby observer will be instructed by the person in charge of the entry that:

    - An entry authorization must be obtained from the person in charge by anyone entering the tank.

    - A rescue harness or wristlets must be worn on the job.

    - The standby observer must know the location of the nearest telephone (with emergency numbers posted); safety eyewash/shower; fire extinguisher; and oxygen inhalator.

    - For all "hot work" inside a tank, the standby observer must be instructed how to shut down welding/burning equipment.

- As long as personnel are inside the vessel, the standby observer must remain in continuous contact with the worker. HE IS NOT TO LEAVE THE JOB SITE EXCEPT TO REPORT AN EMERGENCY.

- UNDER NO CIRCUMSTANCES SHOULD THE STANDBY OBSERVER ENTER THE VESSEL. If the worker(s) in the tank becomes ill or injured, the watcher is to put in effect the emergency plan described in the attached Standard Operating Procedure.

- The standby observer still DOES NOT ENTER THE TANK until additional help is available.

- After being instructed in his responsibilities, the standby observer will sign an instruction form indicating his understanding.

■ Welding and burning within a tank:

- ▸ All welding and burning equipment must be provided with a shutoff device under the control of the standby observer; and the standby observer must know how to shut off the equipment if it becomes necessary.

- ▸ Welding and burning equipment will only be taken into a tank immediately prior to its use and must be removed from the tank immediately after the job is finished.

- ▸ For all "hot work" inside a tank, a properly executed flame permit, if needed, must be displayed at the job site.

- ▸ Standard welding and burning safety precautions will always be followed.

PHASE III--REMOVE TANK

- Disconnect and cap all appurtenant piping.

- Disconnect and decontaminate all appurtenant pumping equipment.

- The vessels shall be removed and reused by Safety-Kleen or cut up and sold as scrap.

- The surface soil beneath the fill pipes and beneath each tank will be sampled and analyzed for volatile organic compounds, mineral spirits, lead, and cadmium.

- The secondary containment system will be disassembled. The construction materials will be tested with TCLP (pertinent constituents only). If the construction materials are classified as non-hazardous using TCLP, then they will be disposed of as a solid waste in a sanitary landfill. In the event the construction materials are identified as hazardous using TCLP, then the construction materials will be disposed of as a hazardous waste in accordance with RCRA regulations.

- Contaminated soil, if it exists, shall be removed and properly disposed of. An additional work plan to determine the extent of contamination and remediation procedures will be submitted in this case.

PHASE IV--BACKFILLING AND REGRADING

- Backfill any excavation with previously excavated material with proper compaction.

- Add additional backfill with proper compaction if necessary. The material must be clean and easily compacted in place.

- Regrade the site to proper topography.

- Remove and dispose of nonusable debris.

FACILITY CLOSURE SCHEDULE AND CERTIFICATION

- Safety-Kleen may amend the closure plan at any time during the active life of the facility. The active life of the facility is that period during which wastes are periodically received. Safety-Kleen shall amend the plan any time changes in operating plans or facility design affect the closure plan or whenever a change occurs in the expected year of closure of the facility. The plan must be amended within 60 days of the changes.

- Within 90 days of receiving the final volume of hazardous wastes, or 90 days after approval of the closure plan, if that is later, Safety-Kleen shall remove from the site all hazardous wastes in accordance with the approved closure plan. The Regional Administrator, or FDER Secretary, may approve a longer period if Safety-Kleen demonstrates that:

  The activities required to comply with this paragraph will, of necessity, take longer than 90 days to complete; or

  The following requirements are met:

  - The facility has the capacity to receive additional wastes;

  - There is a reasonable likelihood that a person other than Safety-Kleen will recommence operation of the site;

- Closure of the facility would be incompatible with continued operation of the site; and

- Safety-Kleen has taken and will continue to take all steps to prevent threats to human health and the environment.

- Safety-Kleen shall complete closure activities in accordance with the approved closure plan and FDER permit and within 180 days after receiving the final volume of wastes or 180 days after approval of the closure plan, whichever is later or an additional period, if required and approved by FDER and EPA.

- When closure is completed, all facility equipment and structures shall have been properly disposed of, or decontaminated by removing all hazardous waste and residues.

- When closure is completed, Safety-Kleen shall submit to the agency a certification by an independent registered professional engineer that the facility has been closed in accordance with the specifications in the approved Closure Plan.

ATTACHMENT II.C.12(b)

TANK SYSTEM CONTINGENT POST-CLOSURE PLAN

ATTACHMENT II.C.12(b)
TANK SYSTEM CONTINGENT POST-CLOSURE PLAN

At the present time Safety-Kleen intends at the time of closure to remove or decontaminate all tank system components and associated containment systems. If at a subsequent time or at the time of the closure permit application, it is determined that all contaminated soils and tank system components cannot practicably be decontaminated or removed, then a plan to perform post-closure care in accordance with the post-closure care requirements that apply to landfills (40 CFR 264.310) will be developed and submitted to the Agency.

ATTACHMENT II.C.13

RESPONSE TO LEAKS AND DISPOSITION OF UNFIT-FOR-USE TANK SYSTEMS

ATTACHMENT II.C.13

RESPONSE TO LEAKS AND DISPOSITION OF UNFIT-FOR-USE TANK SYSTEMS

In the event that a leak or spill were to occur from a tank system or secondary containment system, the actions identified herein will be undertaken.

IMMEDIATE RESPONSE

All waste flow to the tank system in question will be ceased immediately. An inspection will be undertaken to identify the cause of the release. Waste flow to the tank system will not be reinstituted until the tank system has been inspected, repaired, and declared fit for use.

In order to prevent further releases, or to allow inspection and a repair of the system, it may be necessary to remove the waste from the tank system. This waste removal will occur within 24 hours after detection of the leak, or at the earliest practicable time.

All material released to the secondary containment area will be removed within 24 hours, or in as timely a manner as possible, to prevent harm to human health and the environment. Every reasonable effort will be made to prevent migration of the release to soils or surface water.

If necessary, visible contamination of surface water and soil will be removed and properly disposed of.

MODIFICATIONS

If a spill is less than one pound and is immediately contained and cleaned up, no notifications are required. All other releases require notification to the Regional

Administrator and Florida Department of Environmental Regulation (FDER). The reporting requirements identified in the Contingency Plan will satisfy this requirement.

SUBSEQUENT REPORTING

Within 30 days of detection of a release to the environment, a report must be submitted to the Regional Administrator and FDER. The report must contain the following information:

1. Likely route of migration of the release;

2. Characteristics of the surrounding soil (soil composition, geology, hydrogeology, climate);

3. Results of any monitoring or sampling conducted in connection with the release. If sampling has occurred and is not available within 30 days, it must be submitted as soon as available.

4. Proximity to downgradient drinking water, surface water, and populated areas; and

5. Description of response actions taken or planned.

REPAIR OR CLOSURE

If the integrity of the containment system has not been damaged, then the system may be returned to service as soon as the released waste is removed and repairs, if necessary, are made.

If the tank was the source of the release, then the tank must be repaired prior to returning the tank system to service.

If the release was from a tank system component which did not have secondary containment, then secondary containment must provide for this component before the system can be returned to service. The exception to this is if the component can be visually inspected. In this instance, the component may be repaired and returned to service. If a component is replaced, then the component must satisfy the requirements for new tank systems and components.

All major repairs must be certified by an independent, qualified, registered, professional engineer in accordance with 40 CFR 270.11(d). The engineer must certify that the repaired system is capable of handling hazardous wastes without release for the intended life of the system. This report must be filed with the Agency within seven days after returning the tank system to use.

If repairs that meet these requirements cannot be performed, then the tank system must be closed in accordance with the Closure Plan.

PART II K

CLOSURE

ATTACHMENT II.K.1

CLOSURE PLAN

ATTACHMENT II.K.1
CLOSURE PLAN

CLOSURE INTRODUCTION

The Safety-Kleen Corp. has constructed each service center with the intent that each will be a long-term facility for the distribution of Safety-Kleen products. Based on current business and projected facility conditions, this facility is expected to remain in operation until the year of 2025.

In the event that some presently unforeseen circumstance(s) would result in the discontinuance of operations and permanent closure or sale of the facility, the following closure plan is designed to identify the steps necessary to completely close the facility at any point during its intended life, and should be used for tanks, container storage area, and equipment.

It is intended that all closures will be complete and final with removal of waste and decontamination of the facility and associated equipment, in order to eliminate need for maintenance after closure and chance of escape of hazardous waste constituents into the environment.

Procedures described in this closure plan are also applicable to cleaning up of spills and repairing/decontamination of facility or equipment.

FACILITY DATA

1. Waste Management Facility Descriptions

   a. Aboveground Storage Tanks

      A 20,000-gallon waste mineral spirits steel tank and a 20,000-gallon spent ethylene glycol tank will be in a 36-inch high concrete containment area.

   b. Container Storage Area: The container storage area will be a 49' x 80' area with a sloped floor and collection sump. The maximum volume of product and waste stored will be 29,400 gallons, with 6,912 gallons anticipated to be containers of FRS wastes, spent ethylene glycol, waste dry cleaner, spent immersion cleaner, mineral spirits dumpster mud, and/or paint waste.

   c. Solvent Return/Fill Shelter: The solvent return/fill shelter will be a 54' 4" x 78' 8" structure between the warehouse (container storage area) and office portions of the building. It will contain two dumpsters which facilitate the flow of solvent to the tank. These dumpsters are not intended for storage but can hold a maximum of 1,008 gallons (504 gallons each).

2. Maximum Inventory of Wastes

   a. Used Mineral Spirits: 20,000 gallons.

   b. Used Ethylene Glycol: 20,000 gallons.

   c. Containerized Waste: 6,912 gallons. This amount includes any combination of five-gallon containers, 15-gallon (also known as split 30- or 20-gallon) containers, 30-gallon containers, and/or 55-gallon containers.

d. Dumpsters: 1,008 gallons.

CLOSURE PROCEDURE

Container Storage Areas

- The container storage area will house containers of used immersion cleaner, mineral spirits dumpster mud, dry cleaning wastes, paint waste, industrial solvent, and/or spent ethylene glycol.

- At closure, all containers will be removed and transported to the recycle center with proper packaging, labeling, and manifesting where the contents in the containers will be reclaimed and the containers will be cleaned for reuse.

- The concrete floor and spill containment areas will be cleaned with detergent solution and the rinsate will be analyzed for mineral spirits, volatile organic compounds, lead, and cadmium, using SW-846 methods, to determine the effectiveness of decontamination. The area will continue to be washed and rinsed until levels are below MCLs, or if MCLs are not available, PQLs as specified in Appendix IX of 40 CFR 264.

- If the wash water or other wastes generated in the closure process are determined to be hazardous, they will be disposed of properly as a hazardous waste; otherwise, the material will be disposed of as an industrial waste. It should be noted that wash water and rinsate will not be allowed to drain to any waterway. It is anticipated that approximately 350 gallons of rinsate will require RCRA disposal.

- The equipment used to clean this area includes mops, pails, scrub brushes, a wet/dry vacuum, and containers. The mops, pails, and scrub brushes will be containerized and disposed of as hazardous waste. The wet/dry vacuum and hose will be washed with a detergent solution to decontaminate it. The containers will be used to store the wastewater.

Solvent Return/Fill Shelter Area

- This area will be used to return the used mineral spirits to the storage tank.

- Closure of the solvent return receptacles (wet dumpster) will be made prior to the cleaning and removal of the storage tank.

- At closure, the sludge in the dumpsters ("dumpster mud") will be cleaned out and containerized, labeled, and manifested for proper disposal at permitted facilities.

- The dumpsters and the dock area will be cleaned with detergent solution and the rinsate analyzed for mineral spirits, volatile organic compounds, lead, and cadmium to determine the effectiveness of the decontamination. The area will continue to be washed and rinsed until levels are below detectable MCLs, or PQLs if MCLs are not available.

- The rinsing fluids will be discharged through the appurtenant piping system into the storage tank, which will be subjected to a separate closure procedure as described herein.

- The cleansed dumpster and dock structure will be reused by Safety-Kleen, or scrapped.

- The cleanup equipment and solutions disposal are the same as those listed earlier.

PHASE I--OPEN THE TANK

- Access to aboveground tanks is obtained by removing man-ways.

- Prior to opening the tanks, the personnel should have full-face respiratory protection and protective clothing. Once the tanks have been opened they will be provided with positive ventilation. The tanks will then be inspected to determine the approximate quantity and physical conditions of the remaining material.

PHASE II--REMOVING WASTE AND CLEANING TANK

- Before removing the waste from the tank, all piping and appurtenant equipment will be flushed first with clean mineral spirits followed by detergent solution.

- The method to remove the waste material from the tanks will depend on the physical properties and quantities of that material. Prior to any person entering the tank, an effort will be made to remove as much liquid and sludge as possible.

- Subsequent to vacuuming the majority of the material from the tanks, it may be necessary to use a high pressure wash system using clean solvent and detergent solution to rinse residual material from the walls and bottom of the tanks. The evacuated material and the rinse solution will be returned to the recycle center for reclamation. The quantity of wash fluid used will be kept to a minimum in order to limit the amount of unnecessary material. The final rinsate will be analyzed for mineral spirits, volatile organic compounds, lead, and cadmium, using SW-846, to determine the effectiveness of decontamination. The tank will continue to be washed and rinsed until levels are below MCLs, or PQLs if MCLs are not available. Rinsate will be removed using a vacuum tanker truck and will be disposed of as hazardous waste. It is anticipated that approximately 2,000 gallons of rinsate will require RCRA disposal.

- Storage tanks are considered confined spaces, i.e., spaces open or closed having a limited means of egress in which poisonous gases or flammable vapors might accumulate or an oxygen deficiency might occur.

- Confined space entry requires special operating procedures:

  - Tanks are to be washed, neutralized and/or purged (where flammable atmosphere is present) prior to being entered.

  - Supply valves must be closed and "tagged" and bleeder valves left open, or supply piping should be disconnected.

  - Pumps or motors normally activated by automatic controls shall be operated manually to be sure they have been disconnected. Instrument power switches should be tagged "OFF."

  - On tanks where flammable vapors may be present, all sources of ignition must be removed.

  - All tanks must be tested for flammable vapors, toxic gases or oxygen deficiency, in that order, as applicable. The results of such tests should be displayed on the job site.

    - In all tank entering situations, an Oxygen Deficiency Test shall be performed prior to tank entry.

    - Under circumstances where "hot work" (welding, burning, grinding, etc.) is to be performed in or on the vessel, a test for combustible gases shall be taken. This is referred to as a "flash test."

- In most circumstances, flash tests and oxygen deficiency tests will be performed by the supervisor of the area in which the work is being performed.

- Under any conditions where a possibility (no matter how remote) of toxic vapors being present in the tank to be entered exits, the supervisor will arrange to have the air tested.

▸ A set of wristlets or a rescue harness and sufficient rope must be present at the job site to effect a rescue. Any other rescue equipment considered necessary must also be on the job site.

▸ Workers should wear a rescue harness if entering a tank with a large enough opening to easily effect a rescue. In tanks with small openings, only wristlets may be used. However, in cases where there are agitator shafts, containers, or other hazards in which the man's life-line would be entangled and the supervisor in charge feels that wearing the life-line may entrap a man and increase the hazard, the wearing of a harness or wristlets may be eliminated.

▸ A constant source of fresh air must be provided to ensure a complete change of air every few minutes. In cases of short-term entry for inspection or removal of objects, an air mask is recommended. In cases of long-term entry (generally for repair) the use of an air mover should be considered.

▸ When a ladder is required to enter a tank, the ladder must be secured and not removed while anyone is in the vessel. In cases where a rigid ladder could become an obstacle, a chain ladder may be used.

- Adequate illumination must be provided.
  - A flashlight or other battery operated light must also be available to provide illumination for a safe exit in the event of an electrical power failure.
  - In any tank used to store flammable liquids, explosion-proof lighting must be used.
- All electrical equipment to be used inside the tank must be in good repair and grounded.
- Others working in the immediate area shall be informed of the work being done and they shall inform the watcher or supervisor immediately of any unusual occurrence which may make it necessary to evacuate the tank.

■ The "buddy" (standby observer) system:

- Men working inside a confined space must be under the constant observation of a fully-instructed standby observer.
- Before anyone enters the tank, the standby observer will be instructed by the person in charge of the entry that:
  - An entry authorization must be obtained from the person in charge by anyone entering the tank.
  - A rescue harness or wristlets must be on the job.

- The standby observer must know the location of the nearest telephone (with emergency numbers posted); safety eyewash/shower; fire extinguisher; and oxygen inhalator.

- For all "hot work" inside a tank, the standby observer must be instructed how to shut down welding/burning equipment.

- As long as personnel are inside the vessel, the standby observer must remain in continuous contact with the worker. HE IS NOT TO LEAVE THE JOB SITE EXCEPT TO REPORT AN EMERGENCY.

- UNDER NO CIRCUMSTANCES SHOULD THE STANDBY OBSERVER ENTER THE VESSEL. If the worker(s) in the tank becomes ill or injured, the watcher is to put in effect the emergency plan described in the attached Standard Operating Procedure.

- The standby observer still DOES NOT ENTER THE TANK until help is available.

- After being instructed in his responsibilities, the standby observer will sign an instruction form indicating his understanding.

■ Welding and burning within a tank:

▸ All welding and burning equipment must be provided with a shutoff device under the control of the standby observer, and the standby observer must know how to shut off the equipment if it becomes necessary.

- Welding and burning equipment will only be taken into a tank immediately prior to its use and must be removed from the tank immediately after the job is finished.

- For all "hot work" inside a tank, a properly executed flame permit, if needed, must be displayed at the job site.

- Standard welding and burning safety precautions will always be followed.

PHASE III--REMOVE TANK

- Disconnect and cap all appurtenant piping.

- Disconnect and decontaminate all appurtenant pumping equipment.

- The vessels shall be removed and reused by Safety-Kleen or cut up and sold as scrap.

- The surface soil beneath the fill pipes and beneath each tank will be sampled and analyzed for volatile organic compounds, mineral spirits, lead, and cadmium.

- Contaminated soil, if it exists, shall be removed and properly disposed of. An additional work plan to determine the extent of contamination and remediation procedures will be submitted in this case.

- The secondary containment system will be disassembled. The construction materials will be tested with TCLP (pertinent constituents only). If the construction materials are classified as non-hazardous using TCLP, then they will be disposed of as a solid waste in a sanitary landfill. In the event the construction materials are identified as

hazardous using TCLP, then the construction materials will be disposed of as a hazardous waste in accordance with RCRA regulations.

PHASE IV--BACKFILLING AND REGRADING

- Backfill any excavation with previously excavated material with proper compaction.

- Add additional backfill with proper compaction if necessary. The material must be clean and easily compacted in place.

- Regrade the site to proper topography.

- Remove and dispose of nonusable debris.

FACILITY CLOSURE SCHEDULE AND CERTIFICATION

- Safety-Kleen may amend the closure plan at any time during the active life of the facility. The active life of the facility is that period during which wastes are periodically received. Safety-Kleen shall amend the plan any time changes in operating plans or facility design affect the closure plan or whenever a change occurs in the expected year of closure of the facility. The plan must be amended within 60 days of the changes.

- Within 90 days of receiving the final volume of hazardous wastes, or 90 days after approval of the closure plan, if that is later, Safety-Kleen shall remove from the site all hazardous wastes in accordance with the approved closure plan. The Regional Administrator may approve a longer period if Safety-Kleen demonstrates that:

  The activities required to comply with this paragraph will, of necessity, take longer than 90 days to complete; or

The following requirements are met:

- The facility has the capacity to receive additional wastes;
- There is a reasonable likelihood that a person other than Safety-Kleen will recommence operation of the site;
- Closure of the facility would be incompatible with continued operation of the site; and
- Safety-Kleen has taken and will continue to take all steps to prevent threats to human health and the environment.

- Safety-Kleen shall complete closure activities in accordance with the approved closure plan and within 180 days after receiving the final volume of wastes or 180 days after approval of the closure plan, whichever is later.

- When closure is completed, all facility equipment and structures shall have been properly disposed of, or decontaminated by removing all hazardous waste and residues.

- When closure is completed, Safety-Kleen shall submit to the agency a certification by an independent registered professional engineer that the facility has been closed in accordance with the specifications in the approved Closure Plan.

ATTACHMENT II.K.2

CONTINGENT POST-CLOSURE PLAN

ATTACHMENT II.K.2
CONTINGENT POST-CLOSURE PLAN

Closure and post-closure regulations have been promulgated by the United States Environmental Protection Agency (EPA) at 40 CFR, Part 264, Subpart G for permitted hazardous waste facilities. Specific post-closure requirements for hazardous waste storage tanks are contained in 40 CFR 264, Subpart J. The FDER has adopted these regulations by reference in Chapter 17-730.180 of the Florida Administrative Code (FAC).

264.197(c) requires post-closure of tanks as landfills if the tank system does not have secondary containment that meets the requirements of 264.193(b) through (f) or been granted a variance from secondary containment requirements in accordance with 264.193(g). The tank system at Medley meets the requirements of 264.193, and is, therefore, not required to have a contingent post-closure plan under 264.197(c).

264.197(b) requires post-closure of tanks as landfills if the owner or operator demonstrates that not all contaminated soils can be practically removed or decontaminated. At the present time, Safety-Kleen intends at the time of closure to remove or decontaminate all tank system components, associated containment systems, and contaminated soils. If at a subsequent time or at the time of the closure permit application, it is determined that all contaminated soils and tank system components cannot practicably be decontaminated or removed, then a plan to perform post-closure care in accordance with the post-closure care requirements that apply to landfills (Part 264-310) will be enacted.

APPENDIX A

APPENDIX A
SUBPART BB

The following document describes Safety-Kleen's procedures for complying with the Subpart BB RCRA Air Emissions Standards. Drawings depicting the location of valves and pumps will be included with the operating permit application.

safety-kleen corp.

MEMORANDUM

SUBJECT: RCRA Air Emission Standards
Immediate Action Required

DATE: December 17, 1990

TO: Branch Managers

FROM: Ellen Jurczak

cc: Reg. Engrs.
Rick Peoples
Anita Pendry
Jennifer Jendras
Melissa Hlebasko
Reg. Mgrs.
Div. V.P.'s
Bill Heyn
Dan Dowling

On December 21, 1990, new EPA rules take effect which regulate air emissions from equipment (such as pumps and valves) used to manage hazardous wastes. Included are requirements for equipment marking and identification, inspection, recordkeeping and specific repair procedures.

Enclosed are some new inspection forms which you must complete to comply with these rules. An explanation of the forms follows:

1. Equipment Inventory Form

This form must be completed and kept in file 1070 (with a copy sent to EHS, Elgin). **SITE PLANS SHOWING THE I.D. NUMBER AND LOCATION OF ALL EQUIPMENT WILL BE SENT TO YOU BY TECH SERVICES.** Each valve and pump which is associated with the hazardous waste tank(s) (i.e. from the dumpster/barrel washer to the tank and from the tank to the fill pipes) must be marked and listed on this form. The site plan shows the location and newly assigned (by Tech Services) I.D. numbers of all the equipment. You should verify this information to make sure it is correct and use the same I.D. numbers when completing the inventory forms. Tags are used to mark the equipment with its I.D. number. In the column headed Hazardous Waste Management Unit, enter "storage tank". If there are two tanks at the branch, (e.g. waste mineral spirits and waste antifreeze) differentiate between the two for equipment which is only associated with one tank. In the columns headed Pump Description or Valve Type, enter a descriptive term such as spent solvent pump, dumpster shutoff valve, gate valve or check valve.

2. Revised Facility Inspection Record

An additional page has been added to the facility inspection record (file 1210) for the daily inspection of equipment. You should begin using it on December 21, 1990. If a potential leak is discovered (by visual evidence or excessive odor) note it as "N" on the form and follow procedures in #3 below.

3. Leak Detection and Repair Record

After detection of a potential or actual leak, a pump or valve must be monitored with a photoionizer-type instrument within five days. If the instrument reading is 10,000 ppm or greater, a leak is confirmed and a repair must be made within 15 days. Contact your Regional Environmental Engineer immediately to arrange for the equipment to be monitored by a local environmental consultant.

The third form must only be completed for each potential or actual leak detected. The piece of equipment must be tagged with the I.D. number, date of potential or actual leak detection and date of leak confirmation. Tags may be obtained from Tech. Services. After a valve has been repaired, it must be monitored monthly by a consultant using a photoionization detector. After two successive months with no leak detection, the identification may be removed and monitoring discontinued. For other equipment, such as pumps, the tag may be removed after a successful repair. This form must be kept in a new file (1220.2 - Leak Detection and Repair Record).

EQUIPMENT INVENTORY

TO BE FILLED OUT AT THE BRANCH AND KEPT IN THE OPERATING RECORD (FILE 1070) WITH THE SITE PLAN AND PUMP AND VALVE LIST

Listed on the attached pump list and valve list is all equipment at the facility which is subject to the requirements of 40 CFR 264 and 265, Subpart BB. The equipment is also identified on the attached site plan.

The hazardous waste influent to and effluent from the hazardous waste management unit(s) is spent mineral spirits (D001, D004-D011, D018, D019, D021-D030 and D032-D043). Tanks are used for storage of spent mineral spirits which is usually 100% by weight organic. The vapor pressure of mineral spirits at 68° F is 0.27 kPa (equivalent to 2 mm Hg - see MSDS and the attached EPA guidance document page). The waste stream has a vapor pressure equal or lower than that of the clean mineral spirits due to contamination during use with oil, grease and sediment and it is in a liquid state at the equipment, so all equipment is in contact with materials defined as heavy liquid under the cited regulations.

Equipment associated with the waste antifreeze tank(s) is also in heavy liquid service. Ethylene glycol has a vapor pressure at 68^{oF} of .08 mm Hg or 0.01 kPa and is usually 100% organic.

Compliance with the standard (264.1058) will be achieved through daily facility inspections, and if required, leak detection monitoring and repair. The facility inspection record has been updated to include a detailed daily equipment inspection. Records of equipment monitoring and repair are maintained on a separate form in the operating record.

INSPECTION LOG SHEET FOR: Daily Inspection List of EQUIPMENT

INSPECTOR'S NAME/TITLE: _____

INSPECTOR'S SIGNATURE: _____

	MON	TUES	WED	THURS	FRI
DATE: (M/D/Y)	____	____	____	____	____
TIME:	____	____	____	____	____
Pump or Valve Number					
1	A* N	A N	A N	A N	A N
2	A N	A N	A N	A N	A N
3	A N	A N	A N	A N	A N
4	A N	A N	A N	A N	A N
5	A N	A N	A N	A N	A N
6	A N	A N	A N	A N	A N
7	A N	A N	A N	A N	A N
8	A N	A N	A N	A N	A N
9	A N	A N	A N	A N	A N
10	A N	A N	A N	A N	A N

If "N", enter pump or valve # _____ and circle appropriate problem: potential leak, actual leak, sticking, wear, does not operate smoothly, other: _____.

For all leaks and potential leaks, the Leak Detection and Repair Record must be completed.

*A = ACCEPTABLE
N = NOT ACCEPTABLE

Draw a line through valve and pump I.D. numbers which do not apply.

LEAK DETECTION AND REPAIR RECORD

EQUIPMENT I.D.# _____ BRANCH #_____
DESCRIPTION_____

	DATE	INSPECTOR'S SIGNATURE
HOW WAS POTENTIAL OR ACTUAL LEAK DETECTED?_____	_____	_____
DESCRIBE THE POTENTIAL OR ACTUAL LEAK:_____ _____		
INSTRUMENT MONITORING WITHIN FIVE DAYS	_____	_____
(1.) RESULTS_____		
REPAIR ATTEMPT METHOD_____	_____	_____
(2.) RESULTS_____		
REPAIR ATTEMPT METHOD_____	_____	_____
(3.) RESULTS_____		
DATE OF SUCCESSFUL REPAIR (must be completed w/in 15 days)	_____	_____
METHOD_____		
(4.) RESULTS_____		
FOLLOWUP MONTHLY MONITORING FOR VALVES		
(5.) RESULTS_____	_____	_____
(6.) RESULTS_____	_____	_____

MONITORING SUMMARY

	(REFERENCE NUMBER - SEE ABOVE)					
	(1)	(2)	(3)	(4)	(5)	(6)
INSTRUMENT #/OPERATOR	___	___	___	___	___	___
CALIBRATION	___	___	___	___	___	___
BACKGROUND READING	___	___	___	___	___	___
READING AT EQUIPMENT	___	___	___	___	___	___
LEAK DETECTED?	___	___	___	___	___	___

ATTACH ANY DOCUMENTATION PREPARED BY THE CONSULTANT

PUMP LIST

DATE _____

BRANCH # _____

PREPARER'S SIGNATURE _____

	PUMP NUMBER	PUMP DESCRIPTION	HAZARDOUS WASTE MANAGEMENT UNIT	LOCATION
				Refer to site plan

VALVE LIST

DATE _____

BRANCH # _____

PREPARER'S SIGNATURE _____

VALVE SIZE	INDIVIDUAL VALVE NUMBER	VALVE TYPE	HAZARDOUS WASTE MANAGEMENT UNIT	LOCATION
	1			Refer to site plan
	2			
	3			

FLANGE LIST

PAGE

DATE _____
BRANCH # _____
PREPARER'S SIGNATURE _____

	SIZE	INDIVIDUAL NUMBER	TYPE	HAZARDOUS WASTE MANAGEMENT UNIT	LOCATION
					Refer to site plan