CHECKLIST FOR CONSENT ORDER (FOR EXECUTION)

CASE NAME & NO. Safety Kleen Corporation (Medley)

X COVER LETTER

__ NEWS RELEASE FORM

X SIGNED CONSENT ORDER

X EXHIBIT(S): Warning letter with inspection Report

NO. OF EXHIBITS 1

__ OTHER/COMMENTS _____

__ CLERKED BY: Marie DATE APR 10 1995

ENFORCEMENT TRACKING	
DRAFT	
INITIAL	DATE
CM	3-31-95
	3/31
JCMC	3/31/95
AM	4/3/95
VH	4/3

UNITED STATES POSTAL SERVICE

Official Business

PENALTY FOR PRIVATE USE TO AVOID PAYMENT OF POSTAGE, $300

U.S. MAIL

RECEIVED

APR 24 1995

DEPT OF ENV PROTECTION
WEST PALM BEACH

Print your name, address and ZIP Code here

• Mr. Cheryl Mark (Marie) •

STATE OF FLORIDA
Dept. of Environmental Protection
Southeast Florida District
P.O. Box 15425
West Palm Beach, Florida 33416

Is your RETURN ADDRESS completed on the reverse side?

SENDER:

- Complete items 1 and/or 2 for additional services.
- Complete items 3, and 4a & b.
- Print your name and address on the reverse of this form so that we can return this card to you.
- Attach this form to the front of the mailpiece, or on the back if space does not permit.
- Write "Return Receipt Requested" on the mailpiece below the article number.
- The Return Receipt will show to whom the article was delivered and the date delivered.

I also wish to receive the following services (for an extra fee):

1. ☐ Addressee's Address
2. ☐ Restricted Delivery

Consult postmaster for fee.

3. Article Addressed to:

Ms. Barbara Sims, VP
Of Environmental Litigation
Safety-Kleen Corp.
1000 N. Randall Rd.
Elgin, Illinois 60123

4a. Article Number
P 893-730-805

4b. Service Type
☐ Registered ☐ Insured
☒ Certified ☐ COD
☐ Express Mail ☐ Return Receipt for Merchandise

7. Date of Delivery

6. Signature (Addressee)

6. Signature (Agent)

8. Addressee's Address (Only if requested and fee is paid)

PS Form 3811, December 1991 ☆U.S. GPO: 1993—352-714 **DOMESTIC RETURN RECEIPT**

Thank you for using Return Receipt Service

Safety-Klean medley
11-19-96

Liquid + debris on floor

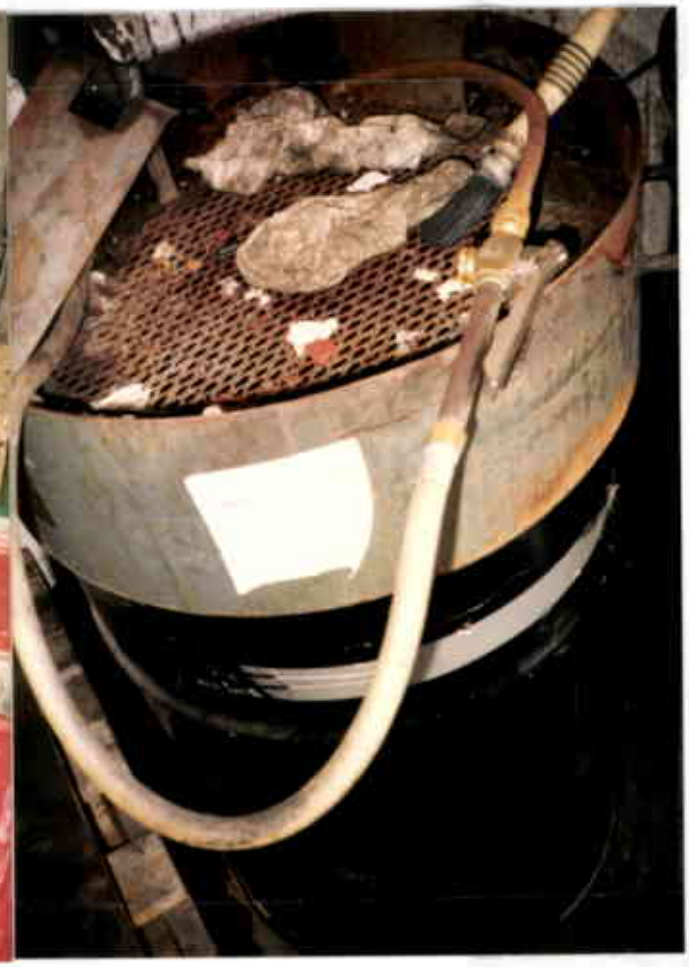

brush system that's cleans empty waste drums.

open drum with brake cleaner waste

Department of Environmental Protection

Southeast District
P.O. Box 15425
West Palm Beach, Florida 33416

Lawton Chiles
Governor

Virginia B. Wetherell
Secretary

APR 10 1995

CERTIFIED MAIL
RETURN RECEIPT REQUESTED

Ms. Barbara Sims
Vice President of Environmental Litigation
Safety-Kleen Corporation
1000 North Randall Road
Elgin, Illinois 60123

Dade County
HW-Safety-Kleen/Medley

RE: Short Form Consent Order in Case of DEP vs. Safety-Kleen Corporation, Inc., OGC File No.: 95-0538.

Dear Ms. Sims:

Enclosed for your implementation is a copy of the fully executed and filed Consent Order in the above styled case. The compliance dates and terms of the Consent Order have been accomplished in a timely manner.

Thank you for your cooperation in this matter. If you have any questions regarding this matter, please call Ms. Cheryl Marx at 407/433-2650, Ext. 116.

Sincerely,

Carl R. deAguilar 4/7/95

Carlos Rivero-deAguilar Date
Director of District Management
Southeast District

VK
CRA/VK/cm

cc: Office of General Counsel, DEP, Tallahassee
Knox McKee, DEP Hazardous Waste Permitting, WPB
Ralph Cline, EPA Region IV
Roberto Abrahante, DERM
File, Reporting Coordinator
West Palm Beach DEP, Files

Department of Environmental Protection

RECEIVED
MAR 27 1995
DEPT OF ENV PROTECTION
WEST PALM BEACH

Lawton Chiles
Governor

Southeast District
P.O. Box 15425
West Palm Beach, Florida 33416

Virginia B. Wetherell
Secretary

MAR 15 1995

RECEIVED
MAR 20 1995
LEGAL DEPARTMENT
SAFETY-KLEEN CORP.

CERTIFIED MAIL
RETURN RECEIPT REQUESTED

Ms. Barbara Sims
Vice President of Environmental Litigation
Safety-Kleen Corporation
1000 North Randall Road
Elgin, Illinois 60123

Dade County
HW-Safety-Kleen/Medley

RE: Proposed Settlement by Short Form Consent Order in Case of DEP vs. Safety-Kleen Corporation, Inc., OGC File No.: 95-0538.

Dear Ms. Sims:

The purpose of this letter is to complete the settlement of the violations previously identified by the Department of Environmental Protection ("DEP") in the Warning Letter (#WL95-003HW13SED) dated February 17, 1995, which is attached. The corrective actions required to bring your facility into compliance have been performed. However, you must pay to the DEP the amount of $5,900.00 in civil penalties to complete settlement of the violations described in the attached Warning Letter, along with $250.00 to reimburse the DEP's costs for a total of $6,150.00. Both payments must be made to "The Department of Environmental Protection" by certified check or money order and shall include thereon the OGC number assigned above. The civil penalty payment should include the notation "Pollution Recovery Fund" and the payment reimbursing DEP for costs should include the notation "Water Quality Assurance Trust Fund." The payments shall be sent to the Southeast District Office, P.O. Box 15425, West Palm Beach, Florida, 33416. The payments shall be sent within twenty days of your signing this letter.

Your signing of this letter where indicated at the end of page two constitutes your acceptance of DEP's offer to settle this case on these terms. If you sign this letter, please return it to DEP at the address above. DEP will then countersign the letter and file it with the Clerk of the DEP. When the signed letter is filed with the Clerk, the letter shall constitute a Consent Order, which is final agency action of the DEP, the terms and conditions of which may be enforced in a court of competent jurisdiction pursuant to Sections 120.69 and 403.121, Florida Statutes. Failure to comply with the terms of this letter once signed by you and entered by the DEP Clerk shall constitute a violation of Section 403.161(1)(b), Florida Statutes.

By countersigning this settlement offer, DEP waives its right to seek judicial imposition of damages, costs and expenses, or civil penalties for the violations described above. By accepting this settlement offer, you waive your right to an administrative hearing to contest this settlement pursuant to Section 120.57, Florida Statutes, and your right to appeal this settlement pursuant to Section 120.69, Florida Statutes. If you do not sign and return this letter to the DEP at the Southeast District address given above within twenty days of receiving it, the case will be referred to the DEP's Office of General Counsel with a recommendation that formal enforcement action be taken against you. None of your rights or substantial interests are determined by this letter unless you sign it and it is filed with the DEP Clerk.

Sincerely,

Carl R. deAguilar 3/14/95

Carlos Rivero-deAguilar Date
Director of District Management
Southeast District

VK
CRA/VK/cm

I ACCEPT THE TERMS OF THIS SETTLEMENT OFFER.

For Safety-Kleen Corporation:

By: Scott E. Fore

Scott E. Fore, Sr.Vice President
Environment, Health & Safety
Safety-Kleen Corporation

For the DEP:

Carl R. deAguilar 4/7/95

Carlos Rivero-deAguilar
Director of District Management
State of Florida Department
of Environmental Protection

ENTERED this 10th day of April, 1995 in West Palm Beach, Florida.

FILING AND ACKNOWLEDGMENT
FILED, on this date, pursuant to Chapter 120.52 F.S., with the designated Department Clerk, receipt of which is hereby acknowledged.

Audrell Maple
Clerk

APR 10 1995
Date

Attachments
cc: West Palm Beach DEP, Files

95-031

NOTICE OF RIGHTS

Persons who are not parties to this Consent Order but whose substantial interests are affected by this Consent Order have a right, pursuant to Section 120.57, Florida Statutes, to petition for an administrative hearing on it. The Petition must contain the information set forth below and must be filed (received) in the Department's Office of General Counsel, 2600 Blair Stone Road, Tallahassee, Florida 32399-2400, within 21 days of receipt of this notice. A copy of the Petition must also be mailed at the time of filing to the District Office named above at the address indicated. Failure to file a petition within the 21 days constitutes a waiver of any right such person has to an administrative hearing pursuant to Section 120.57, Florida Statutes.

The petition shall contain the following information: (a) The name, address, and telephone number of each petitioner; the Department's Consent Order identification number and the county in which the subject matter or activity is located; (b) A statement of how and when each petitioner received notice of the Consent Order; (c) A statement of how each petitioner's substantial interests are affected by the Consent Order; (d) A statement of the material facts disputed by petitioner, if any; (e) A statement of facts which petitioner contends warrant reversal or modification of the Consent Order; (f) A statement of which rules or statutes petitioner contends require reversal or modification of the Consent Order; (g) A statement of the relief sought by petitioner, stating precisely the action petitioner wants the Department to take with respect to the Consent Order.

If a petition is filed, the administrative hearing process is designed to formulate agency action. Accordingly, the Department's final action may be different from the position taken by it in this Notice. Persons whose substantial interests will be affected by any decision of the Department with regard to the subject Consent Order have the right to petition to become a party to the proceeding. The petition must conform to the requirements specified above and be filed (received) within 21 days of receipt of this notice in the Office of General Counsel at the above address of the Department. Failure to petition within the allowed time frame constitutes a waiver of any right such person has to request a hearing under Section 120.57, Florida Statutes, and to participate as a party to this proceeding. Any subsequent intervention will only be at the approval of the presiding officer upon motion filed pursuant to Rule 60Q-2.010, Florida Administrative Code.

Department of Environmental Protection

Lawton Chiles
Governor

Southeast District
P.O. Box 15425
West Palm Beach, Florida 33416

Virginia B. Wetherell
Secretary

FEB 17 1995

CERTIFIED MAIL
RETURN RECEIPT REQUESTED

WARNING LETTER #WL95-003HW13SED
FLD 984 171 694

Mr. Peter Ciocio
Safety-Kleen/Medley
8755 Northwest 95th Street
Medley, Florida 33178

Dade County
HW - Safety Kleen/Medley

RE: Safety-Kleen/Medley, 8755 Northwest 95th Street, Medley, Florida 33178.

Dear Mr. Ciocio:

A hazardous waste compliance inspection was conducted at your facility on November 30, 1994. This inspection was conducted under the authority of Section 403.091, Florida Statutes and Chapter 403, Part IV, Florida Statutes, in order to determine the compliance status of your facility with Title 40 Code of Federal Regulations (CFR) Parts 260 through 268, as adopted in Florida Administrative Code (F.A.C.) Chapter 62-730.

During the inspection possible violations of rules regarding hazardous waste management were noted. These possible violations are described in the "Summary of Violations" section of the attached inspection report.

You are advised that any activity at your facility that may be contributing to violations of the above described statutes and rules should be ceased immediately. Operation of a facility in violation of State statutes or rules may result in liability for damages and restoration, and the judicial imposition of civil penalties up to $50,000 per violation per day pursuant to Section 403.727, Florida Statutes.

You are requested to contact Ms. Cheryl Marx of this office at (407) 433-2650 Ext. 116 within 10 calendar days of receipt of this Warning Letter to arrange a meeting with Department personnel to discuss the issues raised in this Warning Letter. You may wish to consult an attorney and to have the attorney attend the meeting with the Department.

PLEASE BE ADVISED that this Warning Letter is part of an agency investigation preliminary to agency action in accordance with Section 120.57(4), Florida Statutes. The purpose of this letter is to advise you of potential violations and to set up a meeting to

discuss possible resolutions to any potential violations that may have occurred for which you may be responsible. Under the Department's agreement with the United States Environmental Protection Agency (EPA), a formal administrative complaint or "Notice of Violation" (NOV) must be issued within 120 days of the date of this Warning Letter. The issuance of the NOV may be avoided through the entry of a Consent Order or a demonstration that the listed violations did not occur. If the Department issues a NOV, and you are named as a party, you will be informed of your rights to contest any determination made by the Department in the NOV.

If after further investigation, the Department determines that the violations occurred, this matter may be resolved through entry of a Consent Order which will include a compliance schedule and an appropriate penalty. In accordance with the RCRA Civil Penalty Policy of 1990, the penalty which would be assessed in this case is $6,900.00 plus $250.00 for cost and expenses.

Sincerely,

Carl R. deAg 2/17/95

Carlos Rivero-deAguilar Date
Director of District Management
Southeast District

VK
CRA/VK/cm

cc: Ralph Cline, EPA Region IV
Roberto Abrahante, DERM
Knox McKee, DEP Hazardous Waste Permitting, WPB
File, Reporting Coordinator
West Palm Beach, DEP File

Department of Environmental Protection

Lawton Chiles
Governor

Southeast District
P.O. Box 15425
West Palm Beach, Florida 33416

Virginia B. Wetherell
Secretary

FEB 17 1995

HAZARDOUS WASTE INSPECTION REPORT

1. INSPECTION REPORT ___Complaint _X_Routine ___Follow-up _X_Permitting

FACILITY NAME Safety-Kleen/Medley DEP/EPA ID# FLD 984 171 694

ADDRESS 8755 Northwest 95th Street, Medley, Florida 33178

COUNTY Dade PHONE (305) 884-0123 DATE 11-30-94 TIME 9:35 am

TYPE OF FACILITY:

Generator
___ Cond. Exempt S.Q.G.
___ Small Quantity
_X_ Generator
___ Non-Handler

Storage
_X_ Container
_X_ Tank
___ Waste Pile
___ Surface Impoundment

Treatment
___ Tank
___ Land Treatment
___ Thermal
___ Chem/Phys/Bio.
___ Incinerator
___ Surface Impoundment

Transporter
_X_ Transporter
_X_ Transfer Station

Disposal
___ Landfill
___ Surface Impoundment
___ Waste Pile

2. Applicable Regulations:

___ 40 CFR 261.5 _X_ 40 CFR 262 _X_ 40 CFR 263 _X_ 40 CFR 264

___ 40 CFR 265 ___ 40 CFR 266 _X_ 40 CFR 268

3. Responsible Official: (Name & Title)

Jon Ercole - Branch Manager

4. Survey Participants & Principal Inspector:

Safety-Kleen: Jon Ercole, Peter Ciocio
DEP: Cheryl Marx, Manuel Delosantos, Knox McKee

5. Facility Latitude: 25° 51′ 34" Longitude: 80° 20′ 30"

6. Type of Ownership: FEDERAL STATE COUNTY MUNICIPAL PRIVATE

7. Permit No.: **HO 13-216311** Date Issued: **12/2/92** Expiration Date: **12/2/97**

8. Pre-arranged Inspection: ___Yes _X_No.

SAFETY-KLEEN/MEDLEY
INSPECTION REPORT

FLD984171694
GENERATOR, TRANSPORTER,
STORAGE & TRANSFER
FACILITY

BACKGROUND

On November 30, 1994, a routine hazardous waste compliance inspection was conducted at Safety-Kleen/Medley (SKM), 8755 Northwest 95th Street, Medley, Florida. The inspection was part of the Department's 1994-1995 inspection schedule. The inspection and record review were hosted by Mr. Peter Ciocio, the branch manager, and Mr. Jon Ercole, the regional manager. DEP personnel participating in the inspection included Mr. Knox McKee, Mr. Manuel Delosantos, and Ms. Cheryl Marx.

SKM sells and distributes raw solvents and collects spent solvents, used oil and oil filters, used antifreeze, and paint related materials for recycling. SKM has a hazardous waste Operating Permit (OP)(#H013-216311) to operate as a storage and transfer facility. According to Mr. Ercole, there had been no changes in operation since the last inspection conducted on December 15, 1993.

SITE INSPECTION

SKM operates with a fleet of twelve trucks. Trucks are loaded with product "105 solvent" (mineral spirits) in 5, 16, and 30-gallon containers. At the customer's facility, the product 105 solvent is exchanged for spent 105 solvent which is transported back to SKM for storage or transfer. Other wastes, which include spent perchloroethylene (F002, D007, D039, D040) and spent perchloroethylene filters (F002, D039), waste paint related material (D001, F003, F005), immersion cleaner 699 (D006, D008, D018) and used oil filters are left in their containers and placed directly into the waste storage area. SKM also handles Fluid Recovery Service (FRS) waste, which it maintains as a separate transfer facility wastestream. These wastes mainly consist of products that are not initially supplied by SKM. SKM also provides a pick up and delivery laundering service for buffing pads. The buffing pads are used by the fiberglass boat and cultured marble industries to clean wax molds. The soiled buffing pads are sent to the Safety-Kleen facility in Lexington, South Carolina, for laundering, per Mr. Ercole.

RETURN/FILL AREA

In the afternoon the service trucks return to SKM with containers of spent mineral spirits (D001). The containers are unloaded from the trucks onto the loading dock in the return/fill area, and their contents are emptied into one of two "wet dumpsters." The spent solvent in the wet dumpster passes through a screen to remove solids and debris. The liquid portion of the waste is pumped from the wet dumpster to the 20,000-gallon waste mineral spirits tank located in the tank farm adjacent to the main building. The drums are cleaned with a brush attachment inside the wet dumpster. The clean drums are reused to deliver fresh product. Product 105 solvent is pumped from a storage tank in the tank farm to the return/fill area. The mineral spirits is dispensed into the clean drums via a hand held nozzle.

The solid debris collected on the screens and sludge from the bottom of the "wet dumpster" is removed and transferred into one of three satellite accumulations drums. According to specific condition number 25b in the OP, these three drums are to be labeled as follows: "waste sludge", "glass/metal", and "rags/absorbents." Three satellite drums were observed during the inspection. One drum was labeled "rags/absorbents", one was labeled "glass/metal", and the third drum had a generic hazardous waste label. The third drum contained used paper towels.

A catch pan has been installed below the grating at each dumpster to collect spilled solvent. The catch pans are connected via tubing to "safety-can" satellite accumulation containers located on the floor beneath the loading dock. The valves connecting the tubing to the "safety-can" satellite accumulation containers are to be kept closed when waste is not being delivered to the containers. The valves were found to be closed at the time of the inspection.

Several containers, including empty 16, 30 and 55-gallon drums were observed stacked around the "wet dumpsters" in the return/fill area. In addition, an open 30-gallon drum containing approximately one inch of "Premium solvent" (flash point 150°F) was observed on the loading dock. Mr. Ciocio said that the solvent had probably been dispensed into the drum that morning by one of the drivers who used it for cleaning. There are no provisions mentioned in the OP for empty drum storage in the return/fill area. The area appeared cluttered and the DEP inspectors recommended SKM practice better housekeeping methods.

STORAGE AREA

The container storage area consists of the following three operational units:

1) The Allied Product storage area is used for the storage of subsidiary products and equipment which SKM markets along with its line of recyclable solvents. This area was inspected and there appeared to be no waste storage in this area.

2) The FRS waste area, a distinct and separate area within the storage area, is operated as a transfer facility. The wastes observed in the transfer facility the day of the inspection included:

3	(55-gallon)	drums of waste paint material (F005)
1	(55-gallon)	drum of perchloroethylene waste (F002)
12	(16-gallon)	drums perchloroethylene waste (F002)
2	(30-gallon)	drums of waste oil
1	(55-gallon)	drum labeled "non-hazardous well water", not dated

3) The following containers were observed during the inspection in the permitted hazardous waste storage area:

34 (16-gallon) drums of perchloroethylene waste (F002)
11 (10-gallon) drums of spent perchloroethylene filters (F002)
7 (30-gallon) drums of mineral spirits sludge (D001)
13 (16-gallon) drums of mineral spirits sludge (D001)
1 (5-gallon) drum of waste paint material (F005)
3 (30-gallon) drums of used oil filters

All of the hazardous waste containers in the transfer and storage facilities appeared to be properly labeled and dated. According to the accumulation start dates observed on the containers in the transfer facility, none of the hazardous waste had been stored beyond the 10 day storage period. The containers appeared to be in good condition.

The loading dock just south of the storage facility was originally designed for loading and unloading hazardous waste. Instead, the roll-up door by the transfer facility is being used for loading and unloading hazardous waste, according to Mr. Ercole. Per Mr. Ercole, the loading dock is being used mainly for the delivery of new product. The loading dock is also being used as a staging area for Premium Solvent. The product Premium Solvent is hand pumped from 55-gallon drums into 30 and 16-gallon drums for distribution to SKM's customers.

DEP observed several areas of concern in the transfer and storage areas. According to the OP, the transfer facility is to be maintained distinctly and separately within the permitted waste storage area. The painted yellow border on the floor which visibly separated both areas during previous inspections, was not visible at the time of this inspection. The chain previously used to separate the two areas was not in place and appeared to be broken. The impervious floor coating is cracking. The berm in front of the roll-up door next to the transfer facility was broken.

The safety shower in the storage facility was tested by DEP personnel and the flow would not shut off when the lever was released, indicating that it was not functioning properly. Several items of emergency response equipment listed in the spill response plan were missing, including: 1 fire extinguisher, 1 standard telephone, 3 pairs of rubber gloves, 3 pairs of rubber boots, 3 protective aprons, 3 pairs of goggles/safety glasses, and 1 hand held electric pump.

TANK FARM

The tank farm consists of a five foot high concrete containment structure which is covered by a roof. The concrete containment structure is covered with an impermeable coating to make it leak resistant. There are three 20,000 gallon steel tanks inside the containment structure. One tank is used to store spent mineral spirits (D001), and another tank is

used to store product mineral spirits. The third tank was permitted to store waste antifreeze. Per Mr. Ercole, SKM never used the tank to store waste antifreeze. SKM plans to submit a modification to the OP permitting the tank to be used for Premium Solvent storage.

According to the OP, the tanks may be filled to a maximum volume of 19,000 gallons or 95% capacity. Tank levels can be read instantaneously from a digital control panel. The panel is also part of the overfill and leak detection system. According to the read-out the day of the inspection, the volume inside the waste mineral spirits tank was 8 feet and 3/4 inches, or approximately 6,840 gallons.

The protective concrete coating was observed to be cracking on the exterior in two spots along the east side of the containment structure. A large crack was observed on the north side of the containment structure.

OUTSIDE GROUNDS

DEP inspectors observed two dumpsters east of the main building, one is used for trash and the other is used to collect cardboard which is recycled. The OP required signs were posted on exterior fences. There appeared to be no signs of industrial discharges to the ground.

RECORD REVIEW

SKM provided hazardous waste disposal manifests with corresponding land disposal restriction certifications (LDRC) dating back to the previous inspection of 12/15/93 for review. Thirty-five manifests for waste mineral spirits removed from the bulk storage tank were reviewed. According to the manifests the waste mineral spirits is sent to Safety-Kleen in Lexington, South Carolina (EPA ID# SCD077995488), for recycling. Among those manifests reviewed four were missing the corresponding LDRC. Of those which had the corresponding LDRC, five gave the EPA ID# of the transporter, ILD984908202, instead of that of the TSD in the box on the LDRC reserved for the EPA ID# of the TSD. This discrepancy in the records makes it unclear where the waste was sent. According to the manifests reviewed SKM generated 223,056 gallons of D001, D039 ignitable mineral spirits waste from the bulk storage tank since 12/15/93.

Sixty-seven manifests for drummed hazardous waste disposal were reviewed for the months of January, February, March, July, August, September, October, and November of 1994. These hazardous waste shipments included spent perchloroethylene (F002, D007, D039, D040), spent perchloroethylene filters (F002, D039), waste paint related material (D001, F003, F005), immersion cleaner (D006, D008), and mineral spirits sludge and debris removed from the "wet dumpsters" (D001). Of these manifests twenty were missing the corresponding LDRC. Of those which had the corresponding LDRC, nineteen gave the EPA ID# of the transporter, ILD984908202, instead

of that of the TSD in the box on the LDRC reserved for the EPA ID# of the TSD. This discrepancy in the records makes it unclear where the waste was sent. Some of the LDRC failed to make note of the treatment standards for the F listed wastes in the shipments. On the LDRC for the shipment that left SKM on 11/22/94 (manifest #11171) the LDRC did not list treatment standards for any of the wastes listed on the manifest, which included waste perchloroethylene, spent immersion cleaner, and waste mineral spirits sludge. According to the manifests reviewed, SKM shipped 1527 kilograms of spent perchloroethylene, 6768 kilograms of spent perchloroethylene filters, 808 kilograms spent immersion cleaner, 1799 kilograms paint related waste, and 3159 kilograms of waste mineral spirits sludge, during October of 1994.

Mr. Delosantos reviewed inspection logs dating back to 12/15/93. According to Mr. Ciocio, Chris Ibarra, one of the SKM drivers, performs the facility inspections in the late afternoon. The last inspection was conducted on the previous day. The 11/29/94 inspection log for the container storage facility indicated that all of containers were accounted for. Mr. Delosantos was unable to find any mention in the safety inspection logs to indicate SKM had made note of the malfunctioning safety shower or the missing safety equipment. Notations in the inspection logs indicated that the high level alarms on the bulk tank farm were malfunctioning on 10/6/94 and that the structural integrity of the containment structure was deficient on 9/1/94. During the inspection DEP personnel noted that the necessary repairs had not been made to date.

Mr. McKee reviewed the contingency plan, records of personnel training, financial assurances, and closure documentation. These records appeared to be in order. Mr. Ercole said that SKM was planning to update some pages in the contingency plan.

DEPARTMENT FINDINGS

SKM is a large quantity generator, a transfer facility and a permitted storage facility for hazardous waste. SKM is also a collector and transporter of used oil.

An exit interview was conducted and the various areas of concern were discussed. DEP recommended that SKM take immediate action to repair the malfunctioning safety shower and replace the missing safety equipment. DEP recommended that SKM take immediate action to repair cracks in the protective concrete coating and structure of the tank farm containment structure. DEP personnel recommended SKM practice better housekeeping methods in the return/fill area. Several areas of concern in the transfer and storage areas were discussed including the need to maintain the transfer facility distinctly and separately from the adjacent permitted waste storage area. The cracking impervious floor coating and the broken berm by the roll-up door in the transfer facility were also discussed.

In addition, DEP personnel informed SKM that during the record review twenty-four manifests were missing the corresponding LDRC. Of those which had the corresponding LDRC, several gave the EPA ID# of the transporter, ILD984908202, instead of that of the TSD in the box on the LDRC reserved for the EPA ID# of the TSD. This discrepancy in the records makes it unclear where the waste was sent. Three of the manifests for drummed waste were photocopies, SKM was unable to provide exception reports to explain how the photocopy was acquired on place of the original.

On 12/9/94 a letter from SKM was hand delivered to the DEP Southeast District Office. In this letter SKM outlines measures they took to respond to the DEP concerns that are listed above. According to the letter all necessary repairs were completed and missing equipment were replaced by 12/22/94.

In the letter SKM states that they were not required to have exception reports for photocopies of signed returned manifests if the photocopies are received by SKM within forty-five days of the shipment. DEP agrees with SKM on this point, but when DEP personnel requested documentation to verify when SKM received the photocopies none was offered.

SKM states in the letter that they are not required to maintain LDRC for transfer facility wastes. SKM provided twenty-five photocopied LDRC, of which three did not correspond to original signed manifests that were reviewed on 11/30/94, three were LDRC that had been available for review on 11/30/94, seventeen LDRC corresponded to manifests of drummed hazardous waste on which SKM is indicated as the generator at the bottom of these LDRC. The remaining two LDRC corresponded to manifests for shipments of waste mineral spirits generated at SKM from the bulk storage tank (manifests numbered 08294 and 80194). Three of the missing LDRC for drummed waste (manifests numbered 49906, 11212, and 80594), as well as two missing LDRC for waste mineral spirits generated from SKM's bulk storage tank (manifests numbered 50294 and 97646), are still unaccounted for. The Department assumes that SKM is the generator of wastes for which SKM maintains the signed original manifests on site, and the corresponding LDRC indicate SKM as the generator.

Hazardous and solid waste management rules have been violated, as noted below ("Summary of Violations"). The Department expects the violations to be corrected in an expeditious and safe manner. The Department's Enforcement Section is willing to provide assistance within the Department's capabilities, limitations, time constraints and workload. In addition, if not already done, the Department suggests that a copy of the hazardous waste regulations (40 CFR 260-268) be obtained from local public, college or law libraries or EPA Region IV or U.S. Government Printing Office. Please be advised that the Department does not have copies of the regulations to hand out.

SUMMARY OF VIOLATIONS

1) 40 CFR 268.7

Land Disposal Restriction Record Keeping

SKM failed to maintain on site twenty-four LDRC for wastes generated by SKM.

2) 40 CFR 264.15(c)
40 CFR 264.54(e)
OP Specific Condition #7(5)

General Inspection Requirements
Contingency Plan - Emergency Equipment

SKM failed to make repairs on malfunctioning safety equipment and alarms in a timely fashion. SKM failed to maintain all of the required spill control and decontamination equipment in accordance with the approved OP. SKM must notify DEP whenever the approved list of emergency equipment in the OP changes.

3) OP Specific Condition #15

Container Storage Area Maintenance

SKM failed to manage the FRS transfer waste as a segregated wastestream. The FRS transfer waste must be stored within the container storage area, but apart from the wastes which have their manifests terminated at the facility. The painted yellow border on the floor which visibly separated both areas during previous inspections, was not visible at the time of this inspection. The chain used to separate the two areas was not in place. The impervious floor coating is cracking and pealing off of the floor. The berm by the roll-up door by the transfer facility is broken.

CORRECTIVE ACTIONS

1) 40 CFR 268.7

Land Disposal Restriction Record Keeping

Henceforth, SKM shall comply with all record keeping requirements listed in 40 CFR 268.7.

2) 40 CFR 264.15(c)
40 CFR 264.54(e)
OP Specific Condition #7(5)

General Inspection Requirements
Contingency Plan - Emergency Equipment

Henceforth, SKM shall make repairs on malfunctioning safety equipment and alarms in a timely fashion. SKM shall maintain all of the required spill control and decontamination equipment in accordance with the approved OP.

3) OP Specific Condition #15

Container Storage Area Maintenance

Henceforth, SKM shall manage the FRS transfer waste as a segregated wastestream. SKM will insure that FRS transfer waste is maintained within a permanently designated, distinctly separate area.

Florida Department of Environmental Regulation

Southeast District • P.O. Box 15425 • West Palm Beach, Florida 33416

Lawton Chiles, Governor

1900 S. Congress Ave., Suite A
Telephone: 407/433-2650
Fax: 407/433-2666

Virginia B. Wetherell, Secretary

MAY 2 5 1993

CERTIFIED MAIL
RETURN RECEIPT REQUESTED

Dade County
HW-Safety-Kleen/Medley

Mr. Victor L. San Agustin, P.E.
Regional Environmental Engineer
Safety-Kleen Corporation
129 South Kentucky Ave., Suite 701

Re: Request for Modification of Hazardous Waste Operating Permit Safety-Kleen/Boynton, HO13-216311 (Submitted on April 26, 1993).

Dear Mr. San Agustin:

The Department has reviewed your request for modification, as referenced. The information which you have provided enables the following, Class I, minor modification:

* Safety-Kleen may accept waste cartridge filters and manage them as a transfer waste under the Fluid Recovery Service (FRS) program. Any containers used for the management and transportation of hazardous wastes must be in compliance with applicable regulations in 40 CFR Part 264 and 49 CFR Parts 173, 178, and 179.

This letter must be attached to the original permit and becomes part of that permit. This letter constitutes final agency action unless a person substantially affected by this action requests an administrative hearing pursuant to Section 120.57, Florida Statutes. The petition must be filed within fourteen (14) days from receipt of this letter. The petition must comply with the requirements of Florida Administrative Code , Rule 28-5.201 and be filed pursuant to Rule 17-103.155(1) in the Office of General Counsel of the Department of Environmental Regulation at 2600 Blair Stone Road, Tallahassee, Florida 32399-2400. Petitions which are not filed in accordance with the above provisions will not be accepted by the Department. If a formal proceeding pursuant to Section 120.57(1) is requested, at such formal hearing all parties shall have an opportunity to respond, to present evidence and argument on all issues

Recycled Paper
Printed with Soy Based Inks

involved, to conduct cross-examination of witnesses and submit rebuttal evidence, to submit proposed findings of facts and orders, to file exceptions to any order or hearing officer's recommended order, and to be represented by counsel. If an informal proceeding is requested, the agency will, in accordance with its rules of procedure, give affected persons of parties or their counsel an opportunity, at a convenient time and place, to present to the agency or hearing officer written or oral evidence in opposition to the agency's action or refusal to act, or a written statement challenging the grounds upon which the agency has chosen to justify its action or inaction, pursuant to Section 120.587(2), Florida Statutes. The hearing process is designed to formulate agency action. Accordingly, the Department's final action as a result of a hearing may be different from the position taken by it in this stage. Therefore, any person who may wish to contest the Department's ultimate permitting decision must petition for hearing within the fourteen day period described above. Failure to file a request for hearing within this time period shall constitute a waver of any right such person may have to request a hearing under Section 120.57, Florida Statutes.

Sincerely,

Mary E. S. Williams
Director of District Management

JKM : jkm

cc: Satish Kastury, DER/Tallahassee
Alan Farmer, EPA/Atlanta
File/Report Coordinator
Tim Grey, DER/WPB

Florida Department of Environmental Regulation

Southeast District • P.O. Box 15425 • West Palm Beach, Florida 33416

Lawton Chiles, Governor

1900 S. Congress Ave., Suite A
Telephone: 407/433-2650
Fax: 407/433-2666

Virginia B. Wetherell, Secretary

Dade County
HW-Safety-Kleen Corp., Medley

MAY 3 1993

CERTIFIED MAIL
RETURN RECEIPT REQUESTED

Mr. Victor L. San Agustin, P.E.
Regional Environmental Engineer
Safety-Kleen Corporation
129 South Kentucky Ave., Suite 701

Re: Request for Modification of Hazardous Waste Operating Permit
Safety-Kleen/Medley, HO 13-216311 (Submitted on March 15, 1993).

Dear Mr. San Agustin:

The Department has reviewed your request for modification, as referenced. The information which you have provided enables the following Class I, minor modification :

- Safety-Kleen may accept waste "Premium Solvent" at the Medley service center. The waste" Premium Solvent" will be mixed in the wet dumpster (solvent return receptacle), located in the return / fill area, when it arrives at the service center. The Department has not yet determined the regulatory status of the waste "Premium Solvent". Until the Department makes such a determination Safety-Kleen is to transport and handle the waste "Premium Solvent" in the same manner as other hazardous wastes.

This letter must be attached to the original permit and becomes part of that permit. This letter constitutes final agency action unless a person substantially affected by this action requests an administrative hearing pursuant to Section 120.57, Florida Statutes. The petition must be filed within fourteen (14) days from receipt of this letter. The petition must comply with the requirements of Florida Administrative Code, Rule 28-5.201 and be filed pursuant to Rule 17-103.155(1) in the Office of General Counsel of the Department of Environmental Regulation at 2600 Blair Stone Road, Tallahassee, Florida 32399-2400. Petitions which are not filed in accordance with the above provisions will not be accepted by the Department. If a formal proceeding pursuant to Section 120.57(1) is requested, at such formal hearing all parties shall have an opportunity to respond, to present evidence and argument on all issues involved, to conduct cross-examination of witnesses and submit rebuttal evidence, to submit proposed findings of facts and orders, to file exceptions to any order or hearing officer's recommended order, and to be represented by counsel. If an informal proceeding is requested, the agency will, in accordance with its rules of procedure, give affected persons of parties or their counsel an opportunity, at a convenient time and place, to present to the agency or hearing officer written or oral evidence in opposition to the agency's action or refusal to act, or a written

Recycled Paper
Printed with Soy Based Inks

statement challenging the grounds upon which the agency has chosen to justify its action or inaction, pursuant to Section 120.57(2), Florida Statutes. The hearing process is designed to formulate agency action. Accordingly, the Department's final action as a result of a hearing may be different from the position taken by it in this stage. Therefore, any person who may wish to contest the Department's ultimate permitting decision must petition for hearing within the fourteen day period described above. Failure to file a request for hearing within this time period shall constitute a waver of any right such person may have to request a hearing under Section 120.57, Florida Statutes.

Sincerely,

Mary E. S. Williams
Director of District Management

JKM : jkm

cc: Satish Kastury, DER/Tallahassee
Alan Farmer, EPA/Atlanta
File/Report Coordinator
Tim Grey, DER/WPB

safety-kleen

cc: Knox – return to Joe K.

January 19, 1993

Sent Via Federal Express
Mail - January 19, 1993
Airbill # 5162097242

Mr. Raoul Clarke
Hazardous Waste Management Section
Florida Department of Environmental Regulation
Twin Towers Office Building
2600 Blair Stone Road
Tallahassee, FL 32399-2400

RECEIVED
JAN 25 1993
DEPT. OF ENVIRONMENTAL REG.
WEST PALM BEACH

Subject: Status Change Forms for Used Oil Activities, All Safety-Kleen Facilities in Florida

Dear Mr. Clarke:

We acknowledge receipt of your November 24, 1992 memo referencing "EPA Notice of Regulated Waste Activity Status Change" last December 10, 1992.

In response to your memo, enclosed are completed "Status Change Form For Used Oil Activities" forms for each of our active Safety-Kleen facilities. A form was completed for our Tallahassee, Orange Park, Tampa, Altamonte Springs, Sanford, Port Charlotte, Boynton Beach, and Medley facilities.

Furthermore, per your memo, EPA form 8700-12 need not be completed since each of our facilities have EPA ID numbers both for storage and transportation of hazardous wastes.

If you have any questions, please call me at (813)682-8094.

Sincerely,

Victor L. San Agustin

Victor L. San Agustin, P.E.
Regional Environmental Manager
Tampa Region

cc: Satish Kastury, BSHW
Allan Farmer, USEPA IV
Tom Moody, NWFDER
Mike Fitzsimmons, NEFDER
Bill Kutash, SWFDER
Phil Barbaccia, SFFDER
Bill Bostwick, CFFDER
Vivek Kamath, SEFDER

777 BIG TIMBER ROAD ELGIN, ILLINOIS 60123 PHONE 708/697-8460 FAX 708/697-4295

Florida Department of Environmental Regulation

Twin Towers Office Bldg. • 2600 Blair Stone Road • Tallahassee, Florida 32399-2400

Lawton Chiles, Governor

Carol M. Browner, Secretary

RECEIVED
JAN 2 5 1993
DEPT. OF ENVIRONMENTAL REG.
WEST PALM BEACH

STATUS CHANGE FORM FOR USED OIL ACTIVITIES

CURRENT INFORMATION (as originally filed with DER):

Business name: Safety-Kleen Corporation

Mailing address:	Facility address:
Safety-Kleen Corporation	Safety-Kleen Corporation
129 S. Kentucky Ave., Suite 701	8755 N.W. 95th St.
Lakeland, FL 33801	Medley, FL 33178

EPA ID: FLD 984 171 694 (facility)
ILD 051 060 408 (transporter)

Used Oil Registration #: 50490-UO (collector)
50424-UO (transporter)

Current Status:

Hazardous Waste Activities	Federal Used Oil Activities	Florida Used Oil Activities
X Transporter	___ Marketer	X Collector
X Other (Storer)	___ Off-spec	___ Marketer
X Transfer Facility		___ Recycler
		X Transporter

REVISED INFORMATION:

Check the categories for which you wish to notify and register:

X Used Oil Transporter/Transfer Facility

___ Used Oil Processor/Re-refining facility

___ Marketer of on-spec fuel

___ Marketer of off-spec fuel

Delete status you originally notified for? ___ yes X no

If additional changes have occurred, complete the following:

Type of change: N/A
(e.g., address, contact person)

Specify new information (attach additional sheets if necessary):

N/A

==========

I hereby certify under penalty of law that the information submitted on this form is true and accurate to the best of my knowledge. I am aware that there are significant penalties for submitting false information, including the possibility of fine and imprisonment.

Victor L. San Agustin, P.E. — Name (type or print)

Regional Environmental Manager — Title

Victor L. San Agustin — Signature

1/19/93 — Date

UO Status Form 11/92 (rev.0)

Recycled Paper
Printed with Soy Based Inks

Florida Department of Environmental Regulation

Twin Towers Office Bldg. ● 2600 Blair Stone Road ● Tallahassee, Florida 32399-2400

Lawton Chiles, Governor

Carol M. Browner, Secretary

RECEIVED
JAN 25 1993
DEPT. OF ENVIRONMENTAL REG.
WEST PALM BEACH

STATUS CHANGE FORM FOR USED OIL ACTIVITIES

CURRENT INFORMATION (as originally filed with DER):

Business name: Safety-Kleen Corporation

Mailing address:	Facility address:
Safety-Kleen Corporation	Safety-Kleen Corporation
129 S. Kentucky Ave., Suite 701	8755 N.W. 95th St.
Lakeland, FL 33801	Medley, FL 33178

EPA ID: FLD 984 171 694 (facility)
ILD 051 060 408 (transporter)

Used Oil Registration #: 50490-UO (collector)
50424-UO (transporter)

Current Status:

Hazardous Waste Activities	Federal Used Oil Activities	Florida Used Oil Activities
X Transporter	___ Marketer	X Collector
X Other (Storer)	___ Off-spec	___ Marketer
X Transfer Facility		___ Recycler
		X Transporter

REVISED INFORMATION:

Check the categories for which you wish to notify and register:

X Used Oil Transporter/Transfer Facility

___ Used Oil Processor/Re-refining facility

___ Marketer of on-spec fuel

___ Marketer of off-spec fuel

Delete status you originally notified for? ___ yes X no

If additional changes have occurred, complete the following:

Type of change: N/A
(e.g., address, contact person)

Specify new information (attach additional sheets if necessary):

N/A

==========

I hereby certify under penalty of law that the information submitted on this form is true and accurate to the best of my knowledge. I am aware that there are significant penalties for submitting false information, including the possibility of fine and imprisonment.

Victor L. San Agustin, P.E.	Regional Environmental Manager
Name (type or print)	Title
Victor L. San Agustin	1/19/93
Signature	Date

UO Status Form 11/92 (rev.0)

Recycled Paper
Printed with Soy Based Inks

RECEIVED
DEC 2 2 1992
DEPT. OF ENVIRONMENTAL REG.
WEST PALM BEACH

safety-kleen®

December 22, 1992

Mr. J. Knox McKee, Jr.
Florida Department of
Environmental Regulation
Southeast District
1900 South Congress Avenue, Suite A
West Palm Beach, FL 33406

RE: Safety-Kleen Corp. Medley, Florida; FLD984177694

Dear Mr. McKee:

As discussed on December 21, 1992 with Tim Gray of your staff, this letter is to inform you that the two satellite cans were relocated to the north side of the return/fill dock last December 18, 1992. Safety-Kleen (SK) is providing revised return/fill shelter figures for the above-referenced facility. These figures show the placement of the satellite accumulation containers which are attached to the wet dumpsters. The schematic drawing associated with Subpart BB compliance and inspections is being revised in our Elgin, Illinois office, and will be forwarded to Florida Department of Environmental Regulation (FDER) as soon as it is completed.

If you have any questions, please contact me at (813) 682-8094.

Sincerely,

Victor L. San Agustin

Victor L. San Agustin, P.E.
Regional Environmental Manager
Tampa Region

pjh/mmm

Enclosure(s)

c: C. Norton - ERM

13113.21/TSK23/01/KM122192.LTR/3

777 BIG TIMBER ROAD ELGIN, ILLINOIS 60123 PHONE 708/697-8460 FAX 708/697-4295

RECEIVED
DEC 2 2 1992
DEPT. OF ENVIRONMENTAL REG.
WEST PALM BEACH

Figure II.A.4(b)-4
Return/Fill Shelter
Safety-Kleen Corp. Facility
Medley, Florida

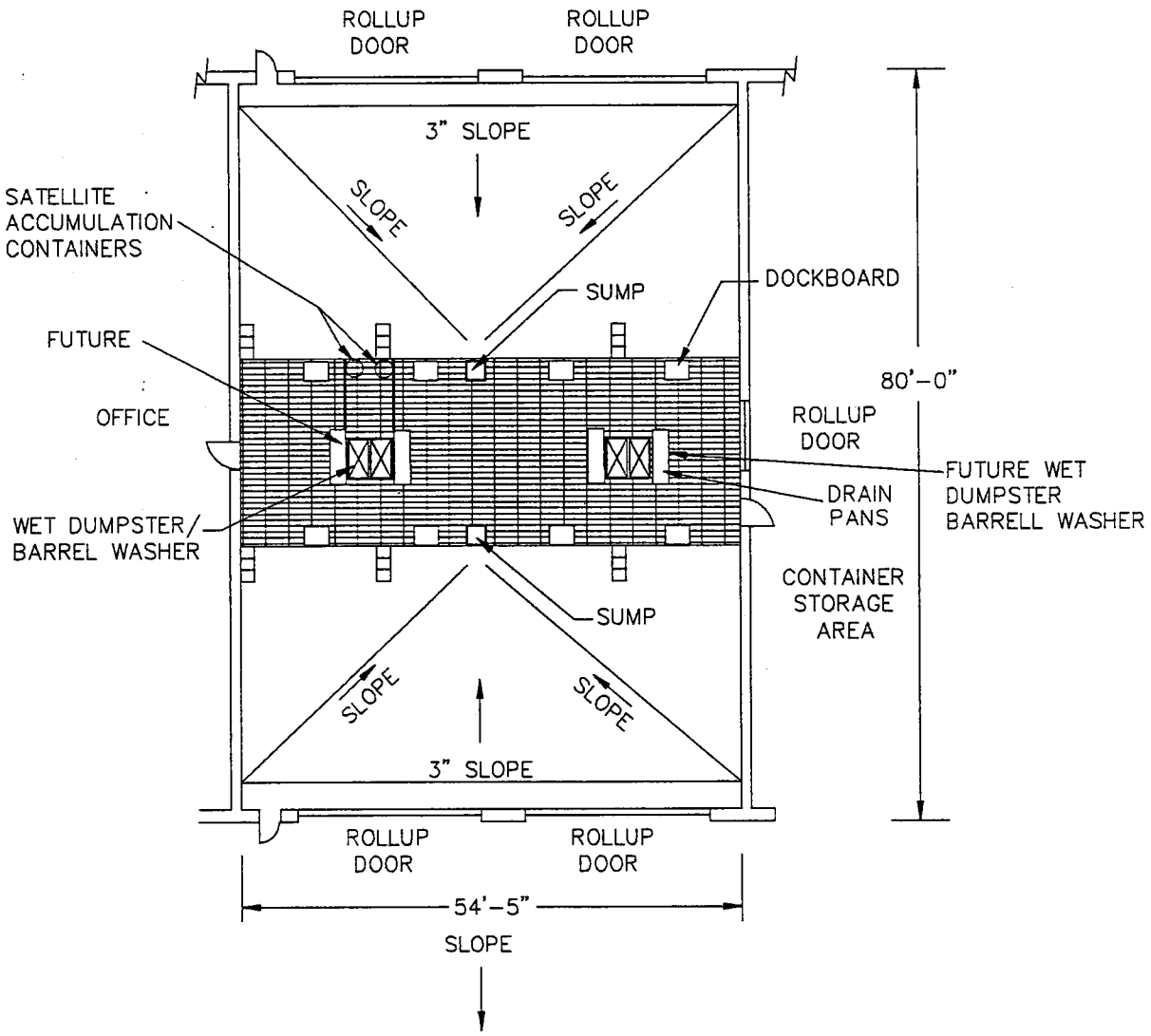

LEGEND

STEPS

GRATING

N

0 20

FEET

REVISION 12/21/92

The ERM Group ®

RECEIVED
DEC 2 2 1992
DEPT. OF ENVIRONMENTAL REG.
WEST PALM BEACH

Figure II.C.7-3
Return/Fill Shelter
Safety-Kleen Corp. Facility
Medley, Florida

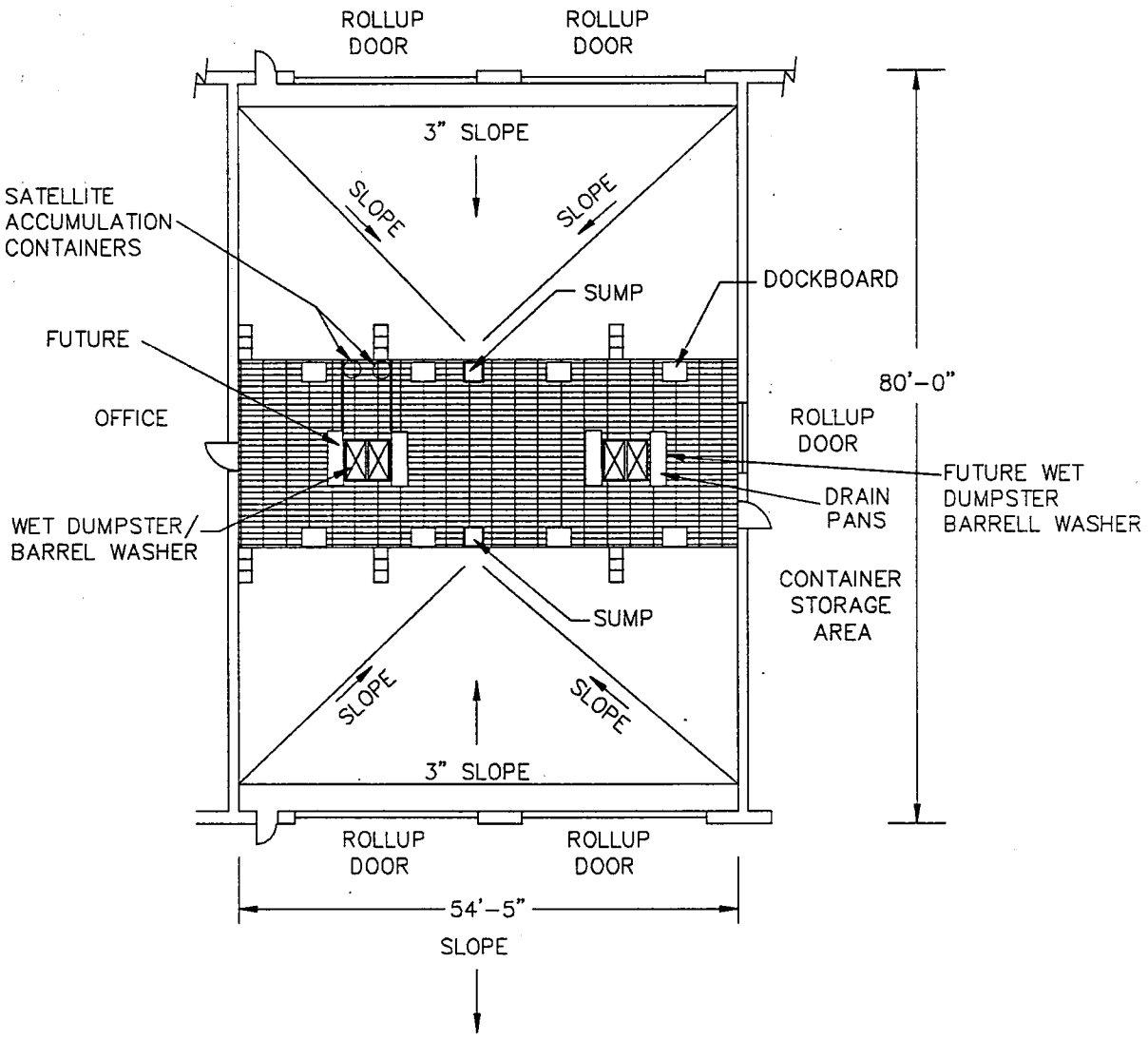

LEGEND

STEPS

GRATING

N

0 20

FEET

REVISION 12/21/92

13112.21/31121FS2/122192-5

The ERM Group ®

S-K MEDLEY

PRE-CONSTRUCTION SITE VISIT

RECEIVED
OCT - 5 1992
DEPT. OF ENVIRONMENTAL REG.
WEST PALM BEACH

safety-kleen®

October 2, 1992

Sent Via Federal Express
Mail - October 2, 1992

Ms. Lorraine Clark
Hazardous Waste Section
Bureau of Solid and Hazardous Waste
Florida Department of Environmental
Regulation
2600 Blair Stone Road
Tallahassee, FL 32399-2400

Subject: Hazardous Waste Facility Certificates
of Liability Insurance for FFY 1993

Dear Ms. Clark:

Enclosed for your files are certificates of liability insurance for all Safety-Kleen facilities in Florida including facilities undergoing closure. These certificates are effective October 1, 1992. Each of our facilities have their respective copies.

If you have any questions, please call me at (813)682-8094.

Sincerely,

Victor L. San Agustin

Victor L. San Agustin, P.E.
Regional Environmental Manager
Tampa Region

cc: Satish Kastury, BSHW
Allan Farmer, USEPA IV
Bill Kellenberger, NWFDER
Ashwin Patel, NEFDER
Gary Santti, SWFDER
Bob Snyder, CFFDER
Phil Barbaccia, SFFDER
Knox McKee, SEFDER ✓

129 S. KENTUCKY AVE. SUITE 701 LAKELAND, FL 33801 PHONE 813/682-8094 FAX 813/688-3683

HAZARDOUS WASTE FACILITY CERTIFICATE OF LIABILITY INSURANCE

1. Planet Insurance Company (the "Insurer") of New York, NY hereby certifies that it has issued liability insurance covering bodily injury and property damage to Safety-Kleen Corp., (the "Insured"), of 777 Big Timber Road, Elgin, Illinois 60123 in connection with the Insured's obligation to demonstrate financial responsibility under 40 CFR 264.147 or 265.147, as adopted by reference in Section 17-30.18, Florida Administrative Code (FAC). The coverage applies at:

(SEE ATTACHED LIST) (FLORIDA)

for sudden and nonsudden accidental occurrences. The amounts of liability are $4 million per each occurrence with annual aggregate of $8 million, exclusive of legal defense costs. The coverage is provided under policy number NGA0105085 issued on October 1, 1992. The effective date of said policy is October 1, 1992.

2. The Insurer further certifies the following with respect to the insurance described in Paragraph 1:

   (a) Bankruptcy or insolvency of the Insured shall not relieve the Insurer of its obligations under the policy.

   (b) The Insurer is liable for the payment of amounts within any deductible applicable to the policy, with a right of reimbursement by the Insured for any such payment made by the Insurer. This provision does not apply with respect to that amount of any deductible for which coverage is demonstrated as specified in 40 CFR 264.147(f) or 265.147(f) as adopted by reference in Section 17-30.18, FAC.

   (c) Whenever requested by the Secretary of the Florida Department of Environmental Regulation (FDER), the Insurer agrees to furnish to the Secretary a signed duplicate original of the policy and all endorsements.

   (d) Cancellation of the insurance, whether by the Insurer or the Insured, will be effective only upon written notice and only after the expiration of sixty (60) days after a copy of such written notice is received by the Secretary of the FDER.

   (e) Any other termination of the insurance (e.g., expiration, non-renewal) will be effective only upon written notice and only after the expiration of thirty (30) days after a copy of such written notice is received by the Secretary of the FDER.

I hereby certify that the wording of this instrument is identical to the wording specified in 40 CFR 264.151(j), as adopted by reference in Section 17-30.18, FAC, as such regulation was constituted on the date first above written, and that the Insurer is licensed to transact the business of insurance, or eligible to provide insurance as an excess or surplus lines Insurer, in one or more states including Florida.

Thomas Luckstone

Thomas Luckstone
Authorized Representative
Planet Insurance Company
77 Water Street
New York, NY 10005

Date Printed: 9/28/92

STATE OF FLORIDA

EPA/DER I.D. NO.	NAME	ADDRESS
FLD 097837983	Safety-Kleen Corp.	505 Plumosa Dr. Altamonte Springs, FL 32701
FLD 984167791	Safety-Kleen Corp.	5610 Alpha Drive Quantum Industrial Park Boynton Beach, FL 33426
FLD 980847214	Safety-Kleen Corp.	161 Industrial Loop South Orange Park, FL 32073
FLD 984171694	Safety-Kleen Corp.	8755 NW 95th St. Medley, FL 33166
FLD 000776716	Safety-Kleen Corp.	19200 Peachland Blvd. Port Charlotte, FL 33949
FLD 982133159	Safety-Kleen Corp.	4426 Entrepot Blvd. Airport Ind. Park Tallahassee, FL 32310
FLD 980847271	Safety-Kleen Corp.	5809 24th Avenue South Tampa, FL 33619
FLD 984171165	Safety-Kleen Corp.	Lot 10 Northstar Business Park Sanford, FL 32771

HAZARDOUS WASTE FACILITY CERTIFICATE OF LIABILITY INSURANCE

1. Planet Insurance Company (the "Insurer") of New York, NY hereby certifies that it has issued liability insurance covering bodily injury and property damage to Safety-Kleen Corp., (the "Insured"), of 777 Big Timber Road, Elgin, Illinois 60123 in connection with the Insured's obligation to demonstrate financial responsibility under 40 CFR 264.147 or 265.147, as adopted by reference in Section 17-30.18, Florida Administrative Code (FAC). The coverage applies at:

   (SEE ATTACHED LIST) (FLORIDA)

   for sudden and nonsudden accidental occurrences. The amounts of liability are $3 million per each occurrence with annual aggregate of $6 million, exclusive of legal defense costs. The coverage is provided under policy number NGA0105085 issued on October 1, 1992. The effective date of said policy is October 1, 1992.

2. The Insurer further certifies the following with respect to the insurance described in Paragraph 1:

   (a) Bankruptcy or insolvency of the Insured shall not relieve the Insurer of its obligations under the policy.

   (b) The Insurer is liable for the payment of amounts within any deductible applicable to the policy, with a right of reimbursement by the Insured for any such payment made by the Insurer. This provision does not apply with respect to that amount of any deductible for which coverage is demonstrated as specified in 40 CFR 264.147(f) or 265.147(f) as adopted by reference in Section 17-30.18, FAC.

   (c) Whenever requested by the Secretary of the Florida Department of Environmental Regulation (FDER), the Insurer agrees to furnish to the Secretary a signed duplicate original of the policy and all endorsements.

   (d) Cancellation of the insurance, whether by the Insurer or the Insured, will be effective only upon written notice and only after the expiration of sixty (60) days after a copy of such written notice is received by the Secretary of the FDER.

   (e) Any other termination of the insurance (e.g., expiration, non-renewal) will be effective only upon written notice and only after the expiration of thirty (30) days after a copy of such written notice is received by the Secretary of the FDER.

I hereby certify that the wording of this instrument is identical to the wording specified in 40 CFR 264.151(j), as adopted by reference in Section 17-30.18, FAC, as such regulation was constituted on the date first above written, and that the Insurer is licensed to transact the business of insurance, or eligible to provide insurance as an excess or surplus lines Insurer, in one or more states including Florida.

Thomas Luckstone

Thomas Luckstone
Authorized Representative
Planet Insurance Company
77 Water Street
New York, NY 10005

Issue Date: 9/28/92

STATE OF FLORIDA

EPA/DER I.D. No.	Name	Address
FLD 049557408	Safety-Kleen Corp.	4701 N. Manhattan Avenue Tampa, FL
FLD 000776757	Safety-Kleen Corp.	1855 S.W. 4th Avenue Bldg. B Bay 30 Delray Beach, FL
FLD 982133159	Safety-Kleen Corp.	3082 W. Tharpe St. (Rear) Tallahassee, FL 32303
FLD 980840086	Safety-Kleen Corp.	7875 NW 54th Street Miami, FL 33166
FLD 097837983	Safety-Kleen Corp.	505 Plumosa Drive Altamonte Spgs., FL 32701

safety-kleen®

RECEIVED
FEB 24 1997
DEPT OF ENV PROTECTION
WEST PALM BEACH

February 18, 1997

Mr. John M. Jones, P.E.
Supervisor, Hazardous Waste Section
Florida Department of Environmental Protection
Southeast District
P.O. Box 15425
West Palm Beach, Florida 33416

Dear Mr. Jones:

Safety-Kleen's Point of Contact for environmental correspondence and permitting has been changed. Please note the following information.

Former Contact: Jon Ercole, EHS Manager
5610 Alpha Drive
Boynton Beach, FL 33426
Phone: 407-734-2560

Current Contact: Della Ridley, Regional Environmental Manager
4800 South Old Peachtree Road
Norcross, GA 30071
Phone: 770-449-0533
Fax: 770-446-1796

Please call me if you have any questions or need additional information.

Very truly yours,

Della A. Ridley
Regional Environmental Manager

DR:asb

CC: Tiffany Holmes, ESI
Vincent Peluso

PRINTED ON RECYCLED PAPER

Department of Environmental Protection

Lawton Chiles
Governor

Southeast District
P.O. Box 15425
West Palm Beach, Florida 33416

Virginia B. Wetherell
Secretary

JAN 2 - 1997

HAZARDOUS WASTE INSPECTION REPORT

1. INSPECTION REPORT ___Complaint _X_Routine ___Follow-up _X_Permitting

FACILITY NAME Safety-Kleen/Medley DEP/EPA ID# FLD 984 171 694

ADDRESS 8755 Northwest 95th Street, Medley, Florida 33178

COUNTY Dade PHONE (305) 884-0123 DATE 11-19-96 TIME 9:35 am

TYPE OF FACILITY:

Generator
___ Cond. Exempt S.Q.G.
___ Small Quantity
_X_ Generator
___ Non-Handler
_X_ Used Oil

Storage
_X_ Container
_X_ Tank
___ Waste Pile
___ Surface Impoundment

Treatment
___ Tank
___ Land Treatment
___ Thermal
___ Chem/Phys/Bio.
___ Incinerator
___ Surface Impoundment

Transporter
_X_ Transporter
_X_ Transfer Station

Disposal
___ Landfill
___ Surface Impoundment
___ Waste Pile

2. Applicable Regulations:

___ 40 CFR 261.5 _X_ 40 CFR 262 _X_ 40 CFR 263 _X_ 40 CFR 264

___ 40 CFR 265 ___ 40 CFR 266 _X_ 40 CFR 268 _X_ 40 CFR 279

3. Responsible Official: (Name & Title)

Jon Ercole - Environmental Health and Safety Manager

4. Survey Participants & Principal Inspector:

Safety-Kleen: Jon Ercole, Tim Sholl, Peter Cordero
DEP: Tiffany Holmes, Morgan Leibrandt, Vincent Peluso

5. Facility Latitude: 25° 51' 34" Longitude: 80° 20' 30"

6. Type of Ownership: FEDERAL STATE COUNTY MUNICIPAL PRIVATE

7. Permit No.:**HO 13-216311** Date Issued: **12/2/92** Expiration Date: **12/2/97**

8. Pre-arranged Inspection: ___Yes _X_ No.

SAFETY-KLEEN/MEDLEY
INSPECTION REPORT

FLD984171694
GENERATOR, TRANSPORTER,
STORAGE & TRANSFER
FACILITY

BACKGROUND

On November 19, 1996, a routine hazardous waste compliance inspection was conducted at Safety-Kleen/Medley (SKM), 8755 Northwest 95th Street, Medley, Florida. The inspection was part of the Department's 1996-1997 inspection schedule. The inspection and record review were hosted by Mr. Tim Sholl, the branch manager, Mr. Jon Ercole, environmental health and safety manager, and Mr. Peter Cordero. DEP personnel participating in the inspection included Ms. Tiffany Holmes, Mr. Morgan Leibrandt, and Mr. Vincent Peluso.

SKM sells and distributes raw solvents and collects spent solvents, used oil and oil filters, used antifreeze, and paint related materials for recycling. SKM has a hazardous waste Operating Permit (OP)(#H013-216311) to operate as a storage and transfer facility. According to Mr. Ercole, there had been no changes in operation since the last inspection conducted on November 30, 1994. SKM employs 22 people and resides on 5 acres of land.

SITE INSPECTION

SKM operates with a fleet of fourteen trucks. Trucks are loaded with product "105 solvent" (mineral spirits) in 5, 16, and 30-gallon containers. At the customer's facility, the product 105 solvent is exchanged for spent 105 solvent which is transported back to SKM for storage or transfer. Other wastes, which include spent perchloroethylene (F002, D007, D039, D040) and spent perchloroethylene filters (F002, D039), waste paint related material (D001, F003, F005), immersion cleaner 699 (D006, D008, D018) and used oil filters are left in their containers and placed directly into the waste storage area. SKM also handles Fluid Recovery Service (FRS) waste, which it maintains as a separate transfer facility wastestream. These wastes mainly consist of products that are not initially supplied by SKM. SKM also provides a pick up and delivery laundering service for buffing pads. The buffing pads are used by the fiberglass boat and cultured marble industries to clean wax molds. The soiled buffing pads are sent to the Safety-Kleen facility in Lexington, South Carolina, for laundering, per Mr. Ercole.

RETURN/FILL AREA

In the afternoon the service trucks return to SKM with containers of spent mineral spirits (D001). The containers are unloaded from the trucks onto the loading dock in the return/fill area, and their contents are emptied into one of two "wet dumpsters." The spent solvent in the wet dumpster passes through a screen to remove solids and debris. The liquid portion of the waste is

pumped from the wet dumpster to the 20,000-gallon waste mineral spirits tank located in the tank farm adjacent to the main building. The drums are cleaned with a brush attachment inside the wet dumpster. The clean drums are reused to deliver fresh product. Product 105 solvent is pumped from one of eight 350-gallon containers located next to the dumpster. The mineral spirits is dispensed into the clean drums via a hand held nozzle.

A catch pan has been installed below the grating at each dumpster to collect spilled solvent. The catch pans are connected via tubing to "safety-can" satellite accumulation containers located on the floor beneath the loading dock. The valves connecting the tubing to the "safety-can" satellite accumulation containers are to be kept closed when waste is not being delivered to the containers. The valves were found to be closed at the time of the inspection. DEP inspectors noticed some spillage/leakage on the floor and recommended that when there is liquid on the floor, it should be immediately cleaned up.

Several containers, including empty 16, 30 and 55-gallon drums were observed stacked around the "wet dumpsters" in the return/fill area. These are the cleaned containers that will be refilled with fresh product.

In the corner of the building, adjacent to the return/fill area, two 55-gallon drums were observed. The drums contained an aqueous brake cleaner solution. The drums were labeled "Hazardous Waste" (D006/D039). One of the drums was closed. The other drum had a grate resting on top of it. DEP inspectors explained that they considered this an open drum because waste was allowed to evaporate through the grate.

STORAGE AREA

The container storage area consists of the following three operational units:

1) The Allied Product storage area is used for the storage of subsidiary products and equipment which SKM markets along with its line of recyclable solvents. This area was inspected and there appeared to be no waste storage in this area.

2) The FRS waste area, a distinct and separate area within the storage area, is operated as a transfer facility. The wastes observed in the transfer facility the day of the inspection included:

3 (55-gallon) drums of silver waste (D011)
1 (55-gallon) drums of D001/D018 waste
10 (16-gallon) drum of perchloroethylene waste (F002)
8 (16-gallon) drums trichlorotrifluroethane waste (F002)
6 (30-gallon) drums of brake fluid waste labeled "non-hazardous"
2 (30-gallon) drums of used photo/x-ray film labeled "non-hazardous"
1 (30-gallon) drum of silver sludge waste labeled "non-hazardous"

3) The following containers were observed during the inspection in the permitted hazardous waste storage area:

8 (30-gallon) drums of perchloroethylene waste (F002)
9 (30-gallon) drums of spent perchloroethylene filters
2 (16-gallon) drums of spent perchloroethylene filters
7 (16-gallon) drums of waste compound cleaning solution (carburetor cleaner) (D006/D008/D018/D027/D039/D040)
5 (5-gallon) containers of waste paint material (D001/D006/D008/D039/D040)
7 (16-gallon) drums of waste paint material (D001/D006/D008/D039/D040)
1 (30-gallon) drum of waste paint material (D001/D006/D008/D039/D040)
6 (30-gallon) drums of used oil filters

All of the hazardous waste containers in the transfer and storage facilities appeared to be properly labeled and dated. According to the accumulation start dates observed on the containers in the transfer facility, none of the hazardous waste had been stored beyond the 10 day storage period. The containers appeared to be in good condition.

A contingency plan (CP) located with the spill response equipment was reviewed. The CP was not up to date.

The loading dock just south of the storage facility was originally designed for loading and unloading hazardous waste. Instead, the roll-up door by the transfer facility is currently being used for loading and unloading hazardous waste, according to Mr. Ercole. Per Mr. Ercole, the loading dock is being used mainly for the delivery of new product. The loading dock is also being used as a staging area for Premium Solvent. The product Premium Solvent is hand pumped from 55-gallon drums into 30 and 16-gallon drums for distribution to SKM's customers.

TANK FARM

The tank farm consists of a five foot high concrete containment structure which is covered by a roof. The concrete containment structure is covered with an impermeable coating to make it leak resistant. There are three 20,000 gallon steel tanks inside the containment structure. One tank is used to store hazardous waste, another tank is used to store premium virgin solvent 105 and the third tank is used to store premium virgin solvent 150.

According to the OP, the tanks may be filled to a maximum volume of 19,000 gallons or 95% capacity. Tank levels can be read instantaneously from a digital control panel. The panel is also part of the overfill and leak detection system.

OUTSIDE GROUNDS

DEP inspectors observed two dumpsters east of the main building, one is used for trash and the other is used to collect cardboard which is recycled. The OP required signs were posted on exterior fences. There appeared to be no signs of industrial discharges to the ground.

RECORD REVIEW

SKM provided hazardous waste disposal manifests with corresponding land disposal restriction certifications (LDRC) dating back to the previous inspection of 11/30/94 for review. Hazardous waste shipments included spent perchloroethylene (F002, D007, D039, D040), spent perchloroethylene filters (F002, D039), waste paint related material (D001/D006/D008/D039/D040), immersion cleaner (D006, D008), and mineral spirits sludge and debris removed from the "wet dumpsters" (D001). All manifests appeared to be in order.

Inspection logs were reviewed. Transfer logs need to include the EPA ID number for the facility from which the waste is being picked up. Also, transfer facility logs need to be separate from generator and storage facility logs.

Mr. Peluso reviewed the CP, records of personnel training, financial assurances, and closure documentation. The SKM CP needs to be updated. Mr. Ercole said that SKM was planning to update some pages in the contingency plan. Training needs to be completed within 6 months of the employees hire date.

DEPARTMENT FINDINGS

SKM is a large quantity generator, a transfer facility and a permitted storage facility for hazardous waste. SKM is also a collector and transporter of used oil.

An exit interview was conducted and the various areas of concern were discussed.

1. DEP personnel recommended SKM practice better housekeeping methods in the return/fill area.

2. The transfer and storage areas were discussed. Logs need to be maintained separately for these areas. Also, EPA ID numbers, for facilities waste is picked up from, need to be included on the log. The transfer area must continue to be maintained distinctly and separately from the adjacent permitted waste storage area.

3. The CP needs to be updated.

4. The drum containing brake cleaner with a grate on top must remain closed at all times except when actively adding or removing waste.

5. Training records must be provided for Horacio Dominguez.

6. SKM must make sure that waste being picked up from a facility is in fact what is labeled on the drum and that the label on the drum matches the manifest. SKM's transfer facility had eight 16-gallon drums labeled trichlorotrifluroethane from CYS Linen (CYS). The manifest read that the drums contained mineral spirits (D001/D039).

7. A copy of SKM's Biennial Report must be kept on site.

On 11/26/96 a letter from SKM was hand delivered to the DEP Southeast District Office. In this letter SKM outlines measures they took to respond to the DEP concerns that are listed above.

1. SKM will remove all debris and dampness under the return/fill area on a daily basis.

2. The transfer area will continue to be maintained distinctly and separately from the adjacent permitted waste storage area.

3. A copy of the updated pages for the CP were provided.

4. The drum containing brake cleaner will remain closed at all times except when actively adding or removing waste.

5. Training records were provided for Horacio Dominguez. The records indicate that the training was done on 11-21-96. New employees must be trained within six months of hiring. Documentation on the day of the inspection indicated that Mr. Dominguez has been working at the SKM facility since April 1996.

6. Mr. Sholl visited CYS on 11-19-96 to obtain information on what the waste is that SKM picks up for CYS. Mr. Feldman of CYS informed Mr. Sholl that he has always used mineral spirits. SKM's representative , Roy Teran, failed to check to ensure that the labels were correct. The eight 16-gallon drums labeled trichlorotrifluroethane from CYS Linen were correctly labeled mineral spirits (D001/D039).

7. A copy of SKM's Biennial Report for 1995 was provided.

Hazardous and solid waste management rules may have been violated, as noted below ("Summary of Potential Violations"). The Department expects the potential violations to be corrected in an expeditious and safe manner. The Department's Enforcement Section is willing to provide assistance within the Department's capabilities, limitations, time constraints and workload. In addition, if not already done, the Department suggests that a copy of the hazardous waste regulations (40 CFR 260-268) be obtained from local public, college or law libraries or EPA Region IV or U.S. Government Printing Office. Please be advised that the Department does not have copies of the regulations to hand out.

SUMMARY OF POTENTIAL VIOLATIONS

40 CFR 264.16	Training SKM failed to complete training for Mr. Dominquez within six months of hire.
40 CFR 264.54	Contingency Plan SKM failed to update the CP.
40 CFR 264.173	Container Management SKM failed to maintain one 55-gallon drum containing brake cleaning solution closed.

Ch. 62-730.171(2)(e), F.A.C. — Inspection Logs

SKM failed to have the EPA ID number of the facility where waste are being picked up.

CORRECTIVE ACTIONS

40 CFR 264.16 — Training

SKM must complete training for all employees within six months of hire.

40 CFR 264.54 — Contingency Plan

SKM must update the CP when changes are made.

40 CFR 264.173 — Container Management

All containers holding hazardous waste must remained closed at all times expect when actively adding or removing waste.

Ch. 62-730.171(2)(e) — Inspection Logs

SKM must have the EPA ID number of the facility where waste is being picked up in the logs.

Report prepared by: Tiffany Holmes Date: 12-10-96
Tiffany Holmes, ESI

Report approved by: Morgan R. Leibrandt Date: 12/26/96
Morgan Leibrandt, ESIII

cc: Ralph Cline, EPA Region IV
Roberto Abrahante, Dade County, DERM
West Palm Beach, DEP File

Florida Department of Environmental Protection

Lawton Chiles
Governor

Southeast District
P.O. Box 15425
West Palm Beach, Florida 33416

Virginia B. Wetherell
Secretary

HAZARDOUS WASTE INSPECTION EXIT INTERVIEW

FACILITY: Safety-Kleen - Medley DATE: 11/19/96 TIME: 12:30 PM

INTERVIEW PARTICIPANTS: SK- Jon Ercole, Tim Sholl FDEP- Tiffany Holmes, Morgan Leibhardt Vincent Peluso

This exit interview is the Department's attempt to advise you early in the process of possible violations of Florida Administrative Code Chapter 17-730, which adopts 40 CFR Parts 260-266 by reference. It is possible that the list of violations noted (checked) is incomplete. After a complete internal file review by the Department an inspection report will be finalized. In most cases, the violations noted by the inspector will not change in the final report, therefore, you are advised to immediately begin correcting these deficiencies noted below.

Please also be aware that the Department has signed an enforcement agreement with the U.S. Environmental Protection Agency which calls for the assessment and collection of monetary penalties when violations, such as these, are noted. While your quick response in correcting the violations may not reduce the calculated penalties, continued non-compliance may result in greater penalty liability.

The following violations have been tentatively identified:

___ 1. Hazardous Waste Determination [262.11].
___ 2. Notification as a generator [262.12].
___ 3. Manifest Deficiencies [262 Subpart B].
✓ 4. Recordkeeping [test results, manifest, biennial report]. - correct log procedures.
✓ 5. Personnel Training [265.16; 262.34(d)]. - provide records for Horatio.
✓ 6. Contingency Plan [265 Subpart D; 262.34(d)(5)]. - Please update + provide copy.
✓ 7. Preparedness and prevention [265 Subpart C; 262.34(d)(4)]. Spillage under drum wash area.
✓ 8. Container Requirements [265 Subpart I; 262.34(d)(2)]. Aqueous Brake Cleaner drum must be kept closed.
___ 9. Tank requirements [265 Subpart J].
___ 10. Exceeding accumulation storage time [262.34(a); 262.34(d)].
✓ 11. Accumulation start date & labels on containers [262.34(a)(2)&(3)].
___ 12. Accumulating >1000 kg without meeting SQG standards [261.5].
___ 13. Not ensuring delivery of HW to a proper TSD facility [261.5].
___ 14. Notification as a TSD facility [264.11].
___ 15. Treatment, storage or disposal without a permit [F.A.C. 17-730].
___ 16. Ground water monitoring [265 Subpart F].
___ 17. Security Requirements [265.14].
___ 18. Storing HW less than 50 feet from the property line [265.176].
___ 19. "No Smoking" signs, ignitable/reactive requirements [265.17].
___ 20. Closure/Post-closure [265 Subpart G].
___ 21. Financial Responsibility [264 Subpart H].
___ 22. Failure to comply with the provisions of a Department Issued Permit or with the provisions of the Consent Order.
___ 23. Other ~~#10011, #10666, #96310 Manifests were missing Land Ban documents.~~

COMMENTS: 1. Need Copies of Transfer facility log for wastes in area currently. Generator's EPA ID # needs to be on transfer facility log. All transfer facility wastes is on the same log and indicated as such. 2. Correct labeling of waste from Cy's Linen Service 3. Training Records for Horatio Dominguez 4. Housekeeping in drum wash area needs 5. Maintain a copy of the Biennial Report onsite. Need to be updated

RECEIPT ACKNOWLEDGED BY

INVESTIGATOR Tiffany Holmes

GENERATOR CHECKLIST

Facility Name: Safety-Kleen/Medley Date: 11-19-96
Facility Representative: Jon Ercole Facility ID #: FLD984171694
SIC Codes: 9511 Inspector: T. Holmes

40 CFR 262 Subpart A -- General Standards

1. Describe the facility's hazardous waste streams:

WASTE DESCRIPTION	EPA Waste Codes	Generation Rate	Disposal Facility and EPA ID	Correct ID?	Testing or Process Knowledge
Perchloroethylene	F002 D007 D039 D040	4662 Kg/mo	Saf-Kl.-Lexington SCD077996488	yes	testing
Perchloroethylene filters	F002 D039	1091 Kg/mo		yes	testing
paint materials	F001 F002 F003 F005	1095 kg/mo		yes	testing
petroleum naptha	D001 D006 D008 D039	90,727 Kg/mo		yes	testing
naptha + debris	F001 F002	398 Kg/mo		yes	testing
cleaning solution	D001 D006 D008	410 Kg/mo		yes	testing

(describe discrepancies in waste identification in narrative)

2. Has the facility obtained an EPA ID number? (40 CFR 262.12) Y ✓ N ____

3. Is the facility disposing of all its hazardous wastes to facilities permitted to accept the waste? Y ✓ N ____

4. Are any hazardous wastes treated or disposed of on site? Describe in narrative. Y ✓ N ✓

5. Is the facility exempt from hazardous waste permit requirements? Describe in narrative. Y ____ N ✓

Facility: Safety-Kleen
Date: 11-19-96

40 CFR 262 Subpart B – The Manifest

1. Does the facility use a manifest for all its hazardous wastes? (262.20) Y ✓ N
2. Is the facility using the correct form (EPA 8700-22; OMB #2050-0039)? Y ✓ N
3. Does the facility ship by rail or water? (If so, check 262.23(c)) Y N ✓
4. Is the manifest filled out properly? Y ✓ N

Item No.:

1.	-Generator EPA ID #	Y ✓ N
	-5 digit manifest document #	Y ✓ N
3.	-Generator name and mailing address	Y ✓ N
4.	-Generator phone #	Y ✓ N
5-8.	-Transporter names and ID #s	Y ✓ N
D-F.	-Transporter phone # (state requirement)	Y ✓ N
9.	-TSD name and mailing address	Y ✓ N
10.	-TSD # EPA ID #	Y ✓ N
H.	-TSD Phone # (state requirement)	Y ✓ N
11.	-DOT description of the waste, including hazard class, ID # and packaging group	Y ✓ N
12.	-Container # and type	Y ✓ N
13-14.	-Quantity of waste and units	Y ✓ N
I.	-EPA waste code (state requirement)	Y ✓ N
K.	-Handling codes (state requirement)	Y ✓ N
16.	-Name, handwritten signature of generator and date	Y ✓ N
17-18.	-Name, handwritten signature of transporter and date	Y ✓ N
19.	-Are any manifest discrepancies noted?	Y ✓ N
20.	-Name, handwritten signature of TSD and date	Y ✓ N

Number of manifests examined 10
Number of errors 0

Note manifest document numbers and dates of manifests with errors below:

Manifest #	Date	Destination	Error(s)

5. Have any exception reports been filed? (262.42) Y N ✓
   If so, did exception reports include legible copy of manifest and cover letter? Y N/A
6. Are manifests retained for 3 years? Y ✓ N

Facility: SafetyKleen
Date: 11-18-96

40 CFR 262 Subpart C -- Pre Transport Requirements

1. Does the facility accumulate the waste on-site prior to treatment or disposal? Y ✓ N ____
   Circle applicable accumulation units:
   (Containers) (Tanks) *Drip Pads* *Containment Buildings*

2. Are containers used to ship the waste off-site? Y ✓ N ____

3. Are any containers on-site prepared for shipment? Y ✓ N ____
   a. If so, are the containers appropriate for the waste? (262.30) Y ✓ N ____

   b. Are the correct diamond-shaped DOT hazard class container labels used? (262.31) Y ✓ N ____

   c. Are containers of 110 g or less marked with the correct DOT shipping name and number? Y ✓ N ____
   Is a label with the language required under 262.32(b) used? Y ✓ N ____
   Is the generator's name, address and manifest document number on the label? Y ✓ N ____

   d. Are placards available to be provided to the transporter? (262.33) Y ✓ N ____

   e. Are bulk packagings used (over 400 kg solid or 118 g liquid)? Y ✓ N ____

   f. Are they marked and placarded properly? Y ✓ N ____

40 CFR 262 Subpart C -- Accumulation Requirements

1. Does the facility comply with the 90-day accumulation time limit? (262.34(a)) (Complete tank, container and/or drip pad checklists for units accumulating waste.) Y ✓ N ____

2. If not, has the facility been issued an extension by the Department? (262.34(b)) Y ____ N ✓

3. Is each container marked with the beginning date of accumulation? (262.34(a)(2)) Y ✓ N ____

4. Is each container and tank marked with the words "Hazardous Waste"? (262.34(a)(3)) Y ✓ N ____

5. Are satellite accumulation points used? Describe in narrative. Y ✓ N ____

6. Are satellite containers closed ((262.34(c)) and marked with the words "hazardous waste" or other words that describe the contents? Y ✓ N ____

7. Do satellite accumulation points hold 55 gallons of waste or less? Y ✓ N ____

8. If not, is the excess marked with the date the excess waste began accumulating? (The date must be within 3 days of the date of inspection (262.34(c)(2)) Y N/A

Facility: Safety-Kleen
Date: 11-19-96

40 CFR 262 Subpart C -- Personnel Training -- (265.16)

1. Do facility personnel complete hazardous waste training? Y ✓ N
   Comments:
2. Is the trainer adequately trained in hazardous waste management procedures? Y ✓ N
3. Does the training cover safety? Y ✓ N
4. Does the training cover emergency response procedures, including equipment handling and inspection? Y ✓ N
5. Does the training cover hazardous waste identification and handling procedures? Y ✓ N
6. Does the facility maintain personnel training records? Y ✓ N
7. Does the facility maintain job titles and position descriptions for employees managing hazardous waste? Y ✓ N
8. Do the job descriptions include the requisite skills, education and experience ? Y ✓ N
9. Do the job descriptions include a list of the positions' duties? Y ✓ N
10. Are people trained within 6 months of hiring? Y ___ N ✓
11. Do they work unsupervised prior to training? Y ___ N ✓
12. Is training reviewed annually? Date of last training 11-21-96 Y ✓ N
13. Are records maintained for three years? Y ✓ N

265 Subpart C -- Preparedness and Prevention

1. Is there evidence of a fire, explosion or release of hazardous waste or hazardous waste constituents to the environment? (265.31) Y ___ N ✓
2. Does the facility have an internal communication or alarm system? (265.32(a)) Y ✓ N
3. Is there a telephone, alarm, 2-way radio or other device at the scene of operations immediately available and capable of summoning assistance? (265.32(b)) Y ✓ N
4. Describe fire control equipment. Is it adequate? (265.32(c)) Y ✓ N
   fire extinguishers
5. Is spill control and decontamination equipment present? (265.32(c)) Y ✓ N

Facility: Safety-Kleen
Date: 11-19-96

6. If sprinklers, water hoses or foam producing equipment is part of the facility fire control equipment, is water available at adequate volume and pressure? (265.32(d)) Y ✓ N

7. Is the emergency equipment inspected and tested periodically? Y ✓ N
   Frequency? 1/yr

8. Is there adequate aisle space to allow unobstructed movement of facility personnel and emergency equipment to any area of the facility where needed? (265.35) Y ✓ N

9. Has the facility made emergency response arrangements with the following: (265.37)

   Fire Department: Metro Dade Y ✓ N
   Police: Medley Y ✓ N
   Hospital: Palmetto General Hospital Y ✓ N
   Emergency Response Contractor: O.H. Materials Co Y ✓ N

10. If not, has the facility attempted to do so and is the refusal documented? Y n/a

265 Subpart C -- Contingency Plans and Emergency Response

1. Does the facility have a contingency plan? 265.51) Y ✓ N

2. Is it at the facility and easily available? (265.53) Y ✓ N

3. Does the plan include:

Fire Response Procedure:	N/A	Y ✓ N
Spill Response Procedures:	N/A	Y ✓ N
Explosion Response Procedures:	N/A	Y ✓ N
A description of arrangements with local authorities:	N/A	Y ✓ N
Emergency Coordinators: (Name) Jim Sholl		Y ✓ N
Addresses and telephone numbers of Emergency Coordinators:		Y ✓ N
Emergency equipment list:		Y ✓ N
Specifications and capabilities of emergency equipment:		Y ✓ N
Locations of emergency equipment:		Y ✓ N
An evacuation plan and routes:		Y ✓ N
Evacuation/alarm signals:		Y ✓ N

4. Is the plan up to date, with no changes to the list of emergency equipment, list of emergency coordinators,applicable regulations or contingency plan failures since the last revision? Y N ✓

5. Has the plan been distributed to the local police, fire department, ERT and hospital? Circle omitted authorities. (265.53) Y ✓ N

6. Is the emergency coordinator authorized to commit funds for incident response? Y ✓ N

Facility: Safety-Kleen
Date: 11-19-96

40 CFR 262 Subpart D -- Record keeping and Reporting

1. Is the generator keeping the following records:

Biennial Reports (262.41)	N/A____	Y ✓	N____	must keep a copy on site
Exception reports (262.42)	N/A____	Y ✓	N____	
Test Results:	N/A____	Y ✓	N____	

2. Where are records kept? ~~Jim Shott~~ Office

3. Who is in charge of keeping records? Name Jim Shall
   Title Branch Manager

4. Any additional reporting, such as contingency plan implementation reports? (262.43) NA____ Y____ N ✓

5. Are records kept for a minimum of 3 years? Y need to keep copies onsite

40 CFR 262 Subpart E -- Exports N/A ✓

1. Has the facility exported any hazardous waste? Y____ N____
2. Has the exporter notified EPA 60 days prior to the initial shipment? Y____ N____
3. Has the receiving country consented to receive the waste? Y____ N____
4. Has a copy of the EPA Acknowledgment of Consent accompanied the shipment? Y____ N____
5. Did the shipment conform, and was the manifest completed as required by 40 CFR 262.54? Y____ N____
6. Has the exporter received confirmation of delivered shipment? Y____ N____
7. Has the exporter submitted an annual report to EPA? Y____ N____
8. Are all records kept a minimum of three years? (262.57) Y____ N____

40 CFR 262 Subpart F -- Imports N/A ✓

1. Has the facility imported any hazardous waste? Y____ N____
2. Has the manifest been completed per 262.60(b)? Y____ N____

Facility Name: Safety-Kleen
Inspector: T. Holmes
Date: 11-19-96

40 CFR Part 265 Subpart I - Use and Management of Containers

1. Are the containers in good condition (265.171)? (Check for leaks, corrosion, bulges, etc.) — Yes ✓ No ____

2. If a container is found to be leaking, does the operator transfer the hazardous waste from the leaking container? — Yes ✓ No ____

3. Is the waste compatible with the containers and/or its liner (265.172)? — Yes ✓ No ____

4. Are the containers kept closed except when adding or removing wastes (265.173(a))? — Yes ____ No ✓

5. Are containers holding hazardous waste opened, handled or stored in such a manner as to cause the container to rupture or leak (265.173(b))? If yes, explain using narrative. — Yes ____ No ✓

6. Are each of the containers inspected at least weekly? (265.174) — Yes ✓ No ____

Are records kept including: (62-730.160 (6) F.A.C.)

- Date? — Yes ✓ No ____
- Time? — Yes ✓ No ____
- Legibly written name of the inspector? — Yes ✓ No ____
- Number of Containers? — Yes ✓ No ____
- Condition of containers? — Yes ✓ No ____
- Notes of observations made? — Yes ✓ No ____
- Date and nature of repairs or corrective actions? — Yes ✓ No ____

7. Are ignitable and reactive wastes stored at least 50 feet from the property boundary? (265.176) — Yes ✓ No ____

8. Are incompatible wastes stored in the same containers? — Yes ____ No ✓

9. Are containers holding incompatible wastes kept apart by physical barrier or sufficient distance? (265.35) — Yes ✓ No ____

10. Is there sufficient aisle space allow to allow full inspection of the containers and labels? (62-730.160(7) F.A.C.) — Yes ✓ No ____

Containment Buildings

Date: _____

Facility Name: _____ Facility ID #: _____

Facility Representative: _____ Inspector: _____

40 CFR 262.34(a)(1)(iv) Generator Containment Building n/a

1. Describe the hazardous waste streams accumulated in the containment building:

2. When was the building placed into use? _____

3. If the unit was in operation prior to February 18, 1993, was a professional engineering certification that the building complies with 40 CFR 265 Subpart DD standards been placed in the facility operating record within 60 days of initial operation of the unit. Y ___ N___

4. If the unit was placed in operation after 2/18/93, was the P. E. certification obtained prior to placing the unit into operation? Y ___ N___

5. Does the owner or operator maintain a written description of the procedure used to ensure that each waste volume remains in the unit for no more than 90 days? Y ___ N___

   Is there a written description of waste management and generation practices for the facility showing the facility is consistent with respecting the 90 day limit? Y ___ N___

   Is there documentation that these procedures are being complied with? Y ___ N___

6. Does the facility have documentation that the 90 day limit is complied with? Y ___ N___

40 CFR 265 Subpart DD

Design Standards 40 CFR 265.1101

1. Is the unit completely enclosed with a floor, walls and roof? Y_____N_____

2. Is the unit designed with sufficient structural strength to prevent failure of the floor and containment structures due to physical contact with the waste or stresses of daily operation? Y_____N_____

3. Does the facility have a primary barrier designed to be sufficiently durable to withstand movement of personnel and handling equipment within the unit? Y_____N_____

   Describe: (ex. geomembrane covered by a concrete wear surface)

Facility:_____
Date:_____
Inspector:_____

4. Are incompatible hazardous wastes placed within the unit? Y_____N_____

   If so, are they managed to prevent the unit and containment system from failure? Y_____N_____

5. Are free liquids managed in the unit? Y_____N_____

   (If not, go to question # 9.)

6. Is the primary barrier sloped to drain liquids to the associated collection system? Y_____N_____

   Is the collection system designed to minimize the accumulation of liquid? Y_____N_____

   Are liquids collected and removed in a timely manner? Y_____N_____

   Describe how liquids are managed.

7. Is the bottom slope of the leak detection system constructed with a bottom slope of at least 1%? Y_____N_____

   Describe in narrative. Is the system constructed of a granular drainage material at least 12 in thick with a hydraulic conductivity of 1×10^{-2} cm/sec or more or is it a synthetic or geonet with a transmissivity of 3×10^{-5} m^2/sec or more? Y_____N_____

8. Does the unit have a secondary containment system designed and constructed of materials to prevent migration of hazardous constituents into the barrier? Y_____N_____

9. (applicable to TSDs only, Generators not eligible) Has the Administrator granted a delay of the secondary containment requirement based on a demonstration that the unit substantially meets the standards of this Subpart?) Y_____N_____

10. Is treatment conducted in the unit? Y_____N_____

    If so, is the treatment area designed and managed to prevent the release of liquids, wet materials or liquid aerosols to other portions of the building? Y_____N_____

11. Does the facility use controls and practices to maintain the primary barrier free from significant cracks, gaps corrosion or other deterioration that could cause waste to be released? Y_____N_____

12. Does the facility take measures to prevent tracking waste out of the unit by personnel or by equipment? Y_____N_____

    Describe designated decontamination area.

    How is the decontamination rinsate managed?

Facility:_____
Date:_____
Inspector:_____

13. Does the facility take measures to control fugitive dust emissions? Y_____N_____
No visible emissions are allowed.

Describe

14. Does the facility have a certification by a registered qualified professional engineer that the containment building meets the requirements? Y_____N_____

15. Has a release occurred from the primary barrier? Y_____N_____

If so, was a record of the discovery made? Y_____N_____

Was the portion of the containment building affected immediately removed from service? Y_____N_____

Was a repair plan and schedule developed? Y_____N_____

Was the Regional Administrator notified within 14 working days in writing? Y_____N_____

16. Was the unit, surrounding area and leak detection system inspected at least once every 7 days? Y_____N_____

17. Is the unit a generator unit? _____ Interim Status? ____ Fully permitted? ____ Illegal TSD? _____

Closure 40 CFR 265.1102 N/A ____

1. Has the owner or operator closed any containment buildings? Y_____N_____

2. Were all contaminated system components, contaminated subsoils and equipment removed and managed as hazardous waste? Y_____N_____

3. If not, has the owner or operator closed the unit and provided for post closure as a landfill? Y_____N_____

Facility: Safety-Kleen
Date: 11-19-96

TRANSPORTERS CHECKLIST

1. Site Name: Safety-Kleen → Medley

Transporter Requirements (40 CFR 263)

1. Do vehicles transporting hazardous waste have the appropriate placards? (263.10)(49 CFR 172.500) Y ✓ N ____
2. Does transporter have an EPA identification number? (263.11(a)) Y ✓ N ____
3. Does the transporter use manifest system as required by 263.20? Y ✓ N ____

   Do the manifests contain at least:

   a. Name, address, and EPA ID of transporter? Y ✓ N ____

   b. Name, address, and EPA ID code of generator? Y ✓ N ____

   c. Name, address, identification code of designated permitted facility? Y ✓ N ____

   d. Corresponding manifest document number? Y ✓ N ____

   e. Description and quantity of each hazardous waste? Y ✓ N ____

   f. Signature of subsequent transporters? Y ✓ N ____

   g. Signatures signifying proper delivery or reasons why delivery could not be certified? Y ✓ N ____

   h. EPA waste codes? Y ✓ N ____

4. International shipments: (263.20(g)) NA ✓

   a. Record of date waste left U.S.? Y ____ N ____

   b. Presence of one signed copy in records? Y ____ N ____

   c. Signed copy of manifest returned to the generator? Y ____ N ____

   d. Copy of the manifest given to a U.S. Customs official at the point of departure from the United States? Y ____ N ____

5. For SQG waste:

   a. Is waste transported according to reclamation agreement? Y ✓ N ____

   b. Is following information recorded on a shipping paper:

      Name, address, and EPA ID of waste generator Y ✓ N ____

Quantity of waste accepted Y ✓ N

DOT - required shipping info Y ✓ N

Date waste is accepted Y ✓ N

c. Does transporter carry this shipping paper during transport? Y ✓ N

d. Are records maintained for three years after termination or expiration of reclamation agreement? Y ✓ N

6. Are copies of the manifest retained for 3 years? (263.22) Y ✓ N

7. Is there evidence of discharge of hazardous waste? (263.30) Y N ✓

8. Has transporter demonstrated the financial responsibility required under 17-30.170(2) Y ✓ N

9. Does the transporter verify financial responsibility with the Department annually (17-730.170(3))? Y ✓ N

Transfer Facility Requirements (17-730.171)

1. Does transporter comply with 10 day storage limit for transfer facilities? (263.12) Y ✓ N

a.. Is the hazardous waste packaged according to 262.30? (263.12) Y ✓ N

2. General Facility Standards (265 Subpart B)

a. Security (265.14)

(1) Is the facility security system adequate to minimize unauthorized entry? Y ✓ N

(2) Are signs posted and legible for 25 feet? Y ✓ N

b. Inspection Requirement (265.15)

(1) Does the facility have a copy of the Inspection Plan? Y ✓ N

(2) Does the facility have completed inspection logs? Y ✓ N

(3) Were the deficiencies corrected in a timely manner? Y ✓ N

(4) Are the inspection logs maintained at the facility for 3 years? Y ✓ N

c. Personnel Training (265.16)

(1) Do management personnel complete hazardous waste training? Y ✓ N

Is training on the job? Y ✓ N
Is training in the classroom? Y N ✓

(2) Do laborers who handle hazardous waste complete training? Y ✓ N

Is training on the job? Y ✓ N
Is training in the classroom? Y N ✓

(3) Does training include:

Emergency response procedures? Y ✓ N
Inspection procedures? Y ✓ N
Operation of hazardous waste handling equipment? Y ✓ N

(4) How often is training reviewed? annually

(5) Does the facility have personnel training records including:

Job title and description of position? Y ✓ N
Description of employee's training Y ✓ N

(6) Is training successfully completed within 6 months of hiring/ transfer to HW position? Y ~~N~~ N ✓

(7) Are records maintained for three years at the facility? Y ✓ N

d. Ignitable, Reactive, or Incompatible Waste (265.17)

(1) Is the waste separated and confined from sources of ignition or reaction, sparks, spontaneous ignition, and radiant heat? Y ✓ N

(2) Are "No Smoking" signs posted in the area? Y ✓ N

3. Preparedness and Prevention (265 Subpart C)

a. Is there evidence of fire, explosion or contamination of the environment? (265.31 Maintenance and Operation of Facility) Y N ✓

If yes, use narrative explanation.

b. Is the facility equipped with (265.32 - required equipment):

(1) Internal communications or alarm system? Y ✓ N
Is it easily accessible in case of emergency? Y ✓ N

(2) Telephone or two-way radio to call emergency response personnel? Y ✓ N

(3) Portable fire extinguishers, fire control equipment, spill control equipment and decontamination equipment? Y ✓ N

Is this equipment tested to assure its proper operation? Y ✓ N

How frequently? 1/yr

(4) Water of adequate volume for hoses, sprinklers or water spray system? Y ✓ N

(a) Describe source of water._____

(b) Indicate flow rate and/or pressure and storage capacity,_____
if applicable._____

c. Is there sufficient aisle space to allow unobstructed movement of personnel and equipment? (e.g., adequate aisle space in between barrels to check for leakage, corrosion and proper labeling, etc.) (265.35 - Required Aisle Space) Y ✓ N_____

d. Has the owner/operator made arrangements with the local authorities to familiarize them with characteristics of the facility? (Layout of facility, properties of hazardous waste handled and associated hazards, places where facility personnel would normally be working, entrances to roads inside facility, possible evacuation routes.) (265.37 - Arrangements with Local Authorities) Y ✓ N_____ NA_____

If NA, explain_____

e. In the case that more than one police or fire department might respond, is there a designated primary authority? (265.37 - Arrangements with Local Authorities) Y ✓ N_____ NA_____

If yes, indicate primary authority. Medley
Is the fire department a city or volunteer fire department? city - metro dade

f. Does the owner/operator have phone number of and agreements with state emergency response teams, emergency response contractors and equipment suppliers? (265.37 - Arrangements with Local Authorities) Y ✓ N_____

Are they readily available to the emergency coordinator? Y ✓ N_____

g. Has the owner/operator arranged to familiarize local hospitals with the properties of hazardous waste handled and types of injuries that could result from fires, explosions, or releases at the facility? (265.37 - Arrangements with Local Authorites) Y ✓ N_____

If no, has the owner/operator attempted to do this? Y n/a

h. If the State, or local authorities decline to enter into the above referenced agreements, has this been documented in the operation record? (265.37 - Arrangements with Local Authorities) Y ✓ N_____

4. Contingency Plan and Emergency Procedures (265 Subpart D)

a. Does the facility have a contingency plan? (265.51 - Purpose and Implementation of Contingency Plan) Y ✓ N_____

b. Is it maintained at the facility? (265.53 - Copies of Contingency Plan) Y ✓ N_____

c. Is the contingency plan a revised SPCC Plan (265.52 - Content of Contingency Plan) Y ✓ N_____

(1) Does the plan include:

(a) Action personnel will take? Y ✓ N_____

(b) Evacuation routes? Y ✓ N

(c) Emergency Equipment? Y ✓ N

(d) Is the emergency equipment properly inspected and maintained? Y ✓ N

d. Is there an emergency coordinator on site or within short driving distance of the plant at all times? (265.55 - Emergency Coordinator) Y ✓ N

e. Who is the emergency coordinator? Jim Scholl

f. Has the facility supplied local police and fire departments with a copy of the contingency plan? (265.53(b) - Content of Contingency Plan) Y ✓ N

g. Has the facility supplied DEP with a copy of the Contingency Plan? (17-730.171(2)(a)) Y ✓ N

5. Container Storage Checklist (Subpart I - Use and Management of Containers 265.170)

a. Are the containers in good condition (265.171)? (check for leaks, corrosion, bulges, etc.) Y ✓ N

b. If a container is found to be leaking, does the operator transfer the hazardous waste from the leaking container? Y ✓ N

c. Is the waste compatible with the containers and/or its liner? (265.172) Y ✓ N

d. Are containers holding hazardous waste opened, handled or stored in such a manner as to cause the container to rupture or leak? (265.173) Y N ✓

If yes, explain using narrative.

e. Are each of the containers inspected at least weekly (265.174)? Y ✓ N

If no, explain using narrative concerning the frequency of inspection.

f. Are containers holding ignitable or reactive wastes located at least 15 meters (50 feet) from the facility property line? (265.176) Y ✓ N

If yes, explain using narrative.

g. Are incompatible wastes stored in the same containers? Y N ✓

If yes, explain using narrative.

h. Are containers holding incompatible wastes kept apart by physical barrier or sufficient distance? Y ✓ N

If no, explain using narrative.

6. Does facility have a written closure plan satisfying requirements of closure performance, notification, and decontamination standards of 40 CFR 265.111, 265.112(c), 265.114, 265.115? (17-730.171(2)(b)) Y ✓ N

Has the facility supplied DEP with a copy of the plan? Y ✓ N

7. Is hazardous waste that is stored in containers or vehicles stored on a man made surface which is capable of preventing spills or releases to the ground? (17-730.171(2)(d)) Y ✓ N

8. Is a written log maintained for all waste entering or leaving the transfer facility? (17-730.171(2)(e)) Y ✓ N need to maintain separate log.

Does the log contain:

Generators' names? Y ✓ N
Manifest numbers? Y ✓ N
Dates when waste enters and leaves facility? Y ✓ N

9. Has the facility notified the department on Form 17-730.900(6) (Transfer facility notification form)? (17-730.171(3)) Y ✓ N

10. Does the transfer facility have an EPA/DER ID number? Y ✓ N

Unregulated Wastes
(Household/Conditionally Exempt/Small Quantity Generator Wastes)

NA

1. Does the transporter have documentation that this waste was generated by an unregulated source? Y ✓ N

2. If no, is the transporter assuming responsibility as the generator of this waste? Y N

a. If yes, complete the applicable Generator or Small Quantity Generator checklist.

b. If no, the inspector should inform the transporter that he will be held responsible as the generator of the waste and will be reinspected to ensure that the applicable requirements are being satisfied. A follow-up inspection should be scheduled as follows:

(1) 90 days after initial inspection if the quantity of "unregulated" wastes on site exceed 1000 kg.

(2) 180 days after initial inspection if the quantity of "unregulated" wastes on site are less than 1000 kg.

3. Does the transporter mix/consolidate hazardous wastes of different DOT shipping descriptions 263.10(c)(2)? Y N ✓

If yes, complete the Generator checklist.

Facility: Safety-Kleen
Date: 11-19-96

Land Disposal Restrictions

1. Does the transporter manage restricted (land ban) wastes? Y ✓ N ~~✓~~

   If yes, check appropriate boxx(es).

"California List"	✓
F--- List Solvents	✓
First Third	
Second Third	
Third Third	
Soil and Debris	✓

RCRA COMPLIANCE INSPECTION REPORT
TSD FACILITIES CHECKLIST

Facility Name: Safety Kleen - Medley Date: 11/19/96
Facility Representative: Timothy M. Scholl Facility ID #: FLD984176794
SIC Codes: 9511 Inspector: Holmes, Peluso, Leibrandt

General Facility Standards

1. Has facility received hazardous waste from a foreign source? (264.12 - required notices) Y___ N ✓

   If yes, has he filed a notice with the Regional Administrator and DEP? Y n/a

2. Does the facility have a copy of the permit along with the approved application? Y ✓ N___

3. Which types of regulated units are used for treatment, storage or disposal at the facility: Fill out appropriate unit checklist(s).

✓	Containers (I)	___	Landfill (N)
✓	Tanks (J)	___	Incinerator (O)
___	Surface Impoundment (K)	___	Drip Pad (W)
___	Waste Pile (L)	___	Miscellaneous Unit (X)
___	Land Treatment (M)	___	Containment Building (DD)

Waste Analysis (264.13)

Permit Condition_____

1. Is a copy of the waste analysis plan maintained at the facility? Y ✓ N___
2. Does the facility have copies of completed waste analysis reports? Y ✓ N___
3. Has the waste analysis been reviewed or repeated as required? Y ✓ N___
4. (For off-site facilities) waste analysis that generators have agreed to supply? Y___ N not provided!
5. Check waste analysis equipment to see if it is on-site and in working condition? Y___ N___ not done onsite!!

no TCL Panalysis!

Security (264.14)

Permit Condition_____

1. Is the facility security system adequate to minimize unauthorized entry? Y ✓ N___
2. Are signs posted and legible for 25 feet? Y ✓ N___

Inspection Requirement (264.15)

Permit Condition_____

TH

1. Does the facility have a copy of the Inspection Plan? Y ✓ N_____
2. Does the facility have completed inspection logs? Y_____ N ✓
3. Were the deficiencies corrected in a timely manner? Y ✓ N_____
4. Are the inspection logs maintained at the facility for 3 years? Y ✓ N_____
5. Is the facility equipped to prevent fire, explosion or contamination of the environment and is the equipment in working condition? Y ✓ N_____

Personnel Training (264.16)

Permit Condition_____

1. Does facility have copy of training plan? Y ✓ N_____
2. Does facility have personnel training records? Y ✓ N_____
3. Has management completed training? Y ✓ N_____ he is the trainer
4. Have laborers completed training? Y_____ N_____ Horatio
5. Is training successfully completed within 6 months of hiring/transfer to HW position? Y_____ N ✓ —
6. Has the training been conducted as stated in the Training Plan? Y ✓ N_____
7. Do the facility personnel training records include:
   a. Job title, description of position and description of qualifications? Y ✓ N_____
   b. Description of employee's training? Y ✓ N_____
8. Are records maintained for 3 years? Y ✓ N_____
9. Date of last annual training review 11-21-96

Ignitable, Reactive, or Incompatible Waste (264.17)

Permit Condition_____

1. Is the waste separated and confined from sources of ignition or reaction sparks, spontaneous ignition, and radiant heat? Y ✓ N_____
2. Are "No Smoking" signs posted in the area? Y ✓ N_____

Preparedness and Prevention - 264 C

1. Is there evidence of fire, explosion or contamination of the environment? Y____ N✓
2. Is the facility equipment located in accordance with the approved plan and is it functional? Y✓ N____
3. Is required aisle space maintained? (264.37) Y✓ N____

Contingency Plan and Emergency Procedures - 264 D

~~AE~~ TH

1. Does the facility have a copy of the Contingency Plan? Y✓ N____

   Is it up to date? Y____ N✓
2. Has the plan been amended and have the amendments been approved? Y n/a N____
3. Were the plan revisions submitted to all authorities? Y✓ N____
4. Is the emergency coordinator on-site or within short driving distance of plant at all times? Y✓ N____
5. Verify equipment location. Is it in working condition? Y✓ N____

Manifest System, Recordkeeping and Report -- 264 E

ML

1. Does the facility have copies of the manifests for off site waste? Y✓ N____
   a. Are the manifests signed and dated and returned to the generator? Y✓ N____
   b. Is a signed copy given to the transporter? Y✓ N____
   c. Are there any manifests that have not been completely filled out? Y✓ N____
2. Are copies of the manifests retained for three years? Y✓ N____
3. Has the facility received any shipments of hazardous waste which were inconsistent with the manifest? Y✓ N____

   If yes, has he attempted to reconcile the discrepancy with the generator and transporter? Y✓ N____

   If no, has DEP been notified? Y____ N✓
4. Does the facility have operating records that show a description and quantity of each hazardous waste and the date and method of T,S,D at the facility? Y✓ N____
5. Does location and quantity of hazardous waste agree with operating record? Y✓ N____

Groundwater Monitoring - 264 F _____N/A

264.90-.100, Permit Condition_____

1. Does the facility have a copy of the Groundwater Monitoring Plan? Y ✓ N_____
2. Does the facility have copies of the groundwater analysis? Y ✓ N_____
3. Has the analysis been conducted as specified? Y ✓ N_____
4. Has there been a statistically significant increase of the value for the parameter from background? Y_____ N ✓
5. Did the facility notify the Department of the parameter that showed a statistically significant increase within 7 days? Y n/a
6. Verify location of wells? Y ✓ N_____
7. Verify condition of wells and check for caps and locks? Y ✓ N_____

Closure and Post-Closure - 264 G

264.110-.120, Permit Condition_____

1. Is a copy of the approved plan and all revisions kept at the facility? Y ✓ N_____
2. Does the maximum inventory of wastes at the facility exceed that specified in the Closure Plan? Y_____ N ✓
3. Does the facility have an approved post-closure plan (for land disposal facilities)? N/A ✓ Y_____ N_____
4. Has the plan been amended and approved by the Department and distributed to the appropriate agencies? Y ✓ N_____

Financial - 264 H

264.140-.151, Permit Condition_____

1. Does the facility have a written estimate, in current dollars, of the cost of closing the facility? Y ✓ N_____
2. Has the financial assurance been updated for the last year? Y ✓ N_____
3. Is the facility in compliance with the financial assurance regulation with respect to:

Check with Aine Ryan
Appears to be in order.

Closure cost?	Y_____	N_____	
Post-closure cost?	Y_____	N_____	NA_____
Sudden liability?	Y_____	N_____	
Non-sudden liability?	Y_____	N_____	NA_____
Corrective action?	Y ✓	N_____	NA_____

Check with Tallahassee

Facility:_____
Date:_____

TSD CONTAINERS CHECKLIST

40 CFR 264 Supart I Permit Conditions _____

1. Are the containers in good condition (264.171)? Y ✓ N_____
2. Are the containers managed in accordance with the permit (264.171)? Y ✓ N_____
3. Is the number of containers equal to or below the maximum inventory for the permit? Y ✓ N_____
4. Are the containers in the designated bays by waste type? Y ✓ N_____
5. Is the waste stored in the specified container? Y ✓ N_____
6. Are containers holding hazardous waste opened, handled or stored in such a manner as to cause the container to rupture or leak (264.173(b))? Y_____ N ✓

   Explain.

7. Are each of the containers inspected at least weekly (264.174)? Y ✓ N_____
8. Is the secondary containment system functional and are free liquids removed and managed in accordance with the permit? Y ✓ N_____
9. Are containers holding ignitable or reactive wastes located at least 15 meters (50 feet) from the facility property line? Y ✓ N_____
10. Is there sufficient aisle space to allow unobstructed movement and inspection? Y ✓ N_____
11. Specific Condition on Permit:

_____ Y_____ N_____

_____ Y_____ N_____

_____ Y_____ N_____

_____ Y_____ N_____

_____ Y_____ N_____

_____ Y_____ N_____

Facility: _____
Date: _____

TSD TANKS CHECKLIST

40 CFR Part 264, Subpart J - Tank Systems

NOTE: If multiple tanks exist, list each tank and specify compliance or noncompliance on the facility's site plan. Indicate on site diagram which tanks are not in compliance.

1. Are tanks presently used to accumulate waste? Y ✓ N ____

2. Are there any exempt tank systems present (Closed-loop Recycling System 261.4(a)(8))? Y ____ N ✓

3 Assessment of the integrity of existing tank systems (264.191):

   a. Number of existing tank systems without secondary containment (264.193) in operation, or for which installation commenced on or prior to July 14, 1986? ~~4~~ Ø

   b. Number of existing tank systems without secondary containment (264.193) in operation, or for which installation commenced on or prior to the date the contained waste became hazardous (after 7/14/86)? ____ Ø

   c. Are assessments on file for each of these tank systems (a & b)? Y ____ N ____

   If yes, do the following apply?

   (1) Assessment conducted by 1/12/88? Y ____ N ____

   (2) For wastes becoming hazardous after 7/14/86,was assessment on tank containing such waste conducted within 1 year after the date the waste became hazardous? Y ____ N ____

   (3) Certification(s) by independent, qualified, and registered P.E.(s)? Y ____ N ____

   (4) Integrity assessment(s) results?

   not leaking? ____
   unfit for use? (see item #8) ____

   Comments:

4. New tank systems or components (264.192):

   a. Number of new tank systems or components installed or put into use after 7/14/86? ____

   b. Are assessments on file for each of the new tank systems or components? Y ____ N ____

If yes, do the following apply:

(1) Assessment(s) certified by an independent, qualified, registered P.E.? Y_____N_____

(2) Assessment(s) include the following information:

Design standards (including secondary containment unless a variance-264.193(g) has been received)? Y_____N_____

Factor affecting corrosion potential of tanks or components in which the external shell or any external metal component is in contact with soil or water (determined by a corrosion expert)? Y_____N_____

The type and degree of external corrosion protection that is needed to ensure the integrity of the tank system(s) or components(s) described above (determined by a corrosion expert)? Y_____N_____

A determination of design or operational measures that will protect underground tank system components against potential damage from vehicular traffic? Y_____N_____

Design considerations to ensure that tank foundations will maintain the load of a full tank? Y_____N_____

Tank systems will be anchored to prevent flotation or dislodgement where it is placed in a saturated zone or is located within a seismic fault zone? Y_____N_____

Tank systems will withstand the effects of frost heave? Y_____N_____

c. Are certification statements by a qualified installation inspector or qualified registered professional engineer on file to attest:

(1) to proper tank system or component installation,tank system tightness, and that necessary repairs were performed if needed? Y_____N_____

(2) That backfill, used for underground tank systems or components, was made up of noncorrosive, porous and homogeneous materials that were placed properly around the system or component to ensure proper support? Y_____N_____

(3) That ancillary equipment has been supported and protected against physical damage and excessive stress due to settlement, vibration, expansion or contraction? Y_____N_____

(4) That the type and degree of corrosion protection necessary was provided, based on the certified design assessment of the system? Y_____N_____

5) That an independent corrosion expert ensured the proper installation of a corrosion protection system if it was field-fabricated? Y_____N_____

d. Has secondary containment been provided as required in 264.193 (see Item #6)?

(1) Has a variance (264.193(g)) been obtained from secondary containment? Y_____N_____

Comments:

5. Containment and detection of releases (264.193).

NOTE Tank systems storing hazardous waste that contain no free liquids and are located within buildings with impermeable floors are exempt from these requirements (264.190(a)).

a. How old are the existing tank systems? _____

(1) If not known, what is the age of the facility? _____

b. How many existing systems are being used to store or treat dioxin containing wastes: F020, F021, F022, F023, F026, and F027? _____

c. Are there any existing tank systems which are used to store or treat materials which became hazardous wastes after 1/12/87? Y_____N_____

(1) How many? _____

d. Use the guidelines in 264.193(a)(1)-(5) to determine when secondary containment meeting the requirement of 264.193 is to be provided (use narrative explanation sheet if necessary).

e. Have any variances (264.193(g)) from secondary containment been requested for existing tank systems? Y_____N_____

f. Are leak tests meeting the requirements of 264.191(b)(5) conducted annually for non-enterable underground tanks without secondary containment? Y_____N_____

g. Are leak tests as described above, or internal inspections or other tank integrity examinations done by an independent, qualified, registered P.E. annually for all other types of tanks systems and ancillary equipment? Y_____N_____

h. Are records of the results of leak tests or other tank integrity assessments kept on file? Y_____N_____

i. Were any tank systems or components found to be leaking or unfit for use as a result of leak tests or other assessments? Y_____N_____

NOTE: If the answer is yes, refer to item #8 - Response to leaks or spills and disposition of leaking or unfit-for- use tank systems (264.196).

Comments:

6. Secondary containment systems (264.193(b)-(f)).

a. Has secondary containment been provided for any tank system or component (see Items 4.d., 5.d, and 9.f)? Y_____N_____

b. If yes, has the containment system been:

(1) Designed, installed, and operated to prevent any migration of wastes or accumulated liquid out of the system to the soil, ground water, or surface water at any time during its use? Y_____N_____

(2) Capable of detecting and collecting releases and accumulated liquids until the collected material is removed? Y_____N_____

c. To satisfy b., has the containment system been:

(1) Constructed of or lined with materials that are compatible with the waste(s) to be contained? Y_____N_____

(2) Provided with sufficient strength and thickness to prevent failure due to pressure gradients, physical contact with waste it is exposed to, climatic conditions, the stress of installation, and the stress of daily operations including vehicular traffic? Y_____N_____

(3) Placed on a foundation or base capable of providing support to the system, resistance to pressure gradients above and below, and protection against failure due to settlement, compression or uplift? Y_____N_____

(4) Provided with a leak detection system that is designed and operated so that it will detect the failure of either the primary and secondary containment structure or any release of waste or accumulated liquid into the secondary containment system within 24 hours or at the earliest practicable time based on existing leak detection technology and site conditions? Y_____N_____

(5) Sloped or otherwise designed or operated to drain or remove liquids resulting from leaks, spills, or precipitation? Y_____N_____

d. Which device below is used to provide secondary containment for tanks? (Check those that apply.)

(1) A liner (external to the tank) wall for secondary Containment ✓
(2) A vault —
(3) A double-walled tank
(4) An equivalent device approved by the Department.

e. If an external liner system is used, has it been:

(1) Designed or operated to contain 100% of the capacity of the largest tank within its boundary? Y_____N_____

(2) Designed or operated to prevent run-on or infiltration of precipitation into the system? Y_____N_____

NOTE: If the containment collection system has sufficient excess capacity - able to contain precipitation from a 25-year, 24-hour rainfall event - this feature isnot necessary.

(3) Determined to be free of cracks and gaps? Y_____N_____

(4) Designed and installed to completely surround thetank and to cover all surrounding earth to prevent lateral and vertical migration of waste? Y_____N_____

f. If a vault system is used, has it been: ~~N/A~~

(1) Designed or operated to contain 100% of the capacity of the largest tank within its boundary? Y_____N_____

(2) Designed or operated to prevent run-on or infiltration of precipitation into the system (see note above)? Y~~N~~ N ✓ - roof lessens the rainwater

(3) Constructed with chemical-resistant water stops in place at all joints (if any)? Y ✓ N_____

(4) Provided with an impermeable interior coating or lining that is compatible with the accumulated waste to prevent migration into the concrete? Y ✓ N_____

(5) Provided with protection against the formation and ignition of vapors within the vault if the wastes being accumulated are ignitable or reactive? Y_____N_____ N/A

(6) Provided with an exterior moisture barrier or otherwise designed or operated to prevent migration of moisture into the vault (if it is subject to hydraulic pressure)? Y_____N_____ N/A

g. If double-walled tanks are used, are they: N/A

(1) Designed as an integral structure so that the outer shell will contain releases from the inner tank? Y_____N_____

(2) Protected, if constructed of metal, from corrosion on the inner tank interior and outer shell exterior? Y_____N_____

(3) Provided with a built-in, continuous leak detection system capable of detecting a release within 24 hours or at the earliest practicable time based on existing technology and site conditions? Y_____N_____

Comments:

7. General operating requirements (264.194).

a. Is there any evidence of ruptures, leaks, corrosion, or failure in the tank system or ancillary equipment? Y_____N_____

NOTE: If the answer is yes, explain in the narrative report.

b. Are appropriate controls and practices such as the following used to prevent spills and overflows from tanks or secondary containment systems:

(1) Spill prevention controls (e.g, check valves, dry discount couplings, etc.)? Y_____N_____

(2) Overfill prevention controls (e.g., level sensing devices, high level alarms, automatic feed cutoff, or bypass to a standby tank)? Y_____N_____

(3) Maintenance of sufficient freeboard in uncoverd tanks to prevent overtopping by wave, wind action, or precipitation? Y_____N_____

c. Have any leaks or spills occurred in a tank system or its ancillary equipment? Y_____N_____

NOTE: If the answer is yes, explain what steps were taken in response to this situation in the narrative report (see item #8 - 264.196).

Comments:

8. Inspections (264.195).

a. Does the owner/operator follow a schedule and procedure for inspecting overfill controls? Y_____N_____

b. Does the owner/operator inspect the following, each operating day, where present:

(1) Aboveground portions of the tank system to detect corrosion or releases of waste? Y_____N_____

(2) Data gathered from monitoring equipment and leak detection equipment (e.g. pressure and temperature guages, monitoring wells)? Y_____N_____

(3) The construction materials and the area immediately surrounding the externally accessible portion of the tank system including secondary containment structures (e.g. dikes) to detect erosion or signs of releases of hazardous waste (e.g. wet spots, dead vegetation)? Y_____N_____

b. Are cathodic protection systems, if present, inspected according to the following schedule:

(1) Six months to confirm the proper operation of the cathodic protection system after the initial installation, and annually thereafter? Y_____N_____

(2) Every other month to inspect sources of impressed current? Y_____N_____

c. Are the inspection results documented in the operating record of the facility? Y_____N_____

Comments:

9. Response to leaks or spills and disposition of leaking or unfit-for-use tank systems (264.196).

a. If a tank or secondary containment system has a leak or a spill has occurred, was the system immediately removed from service and the flow of hazardous waste into the system immediately stopped? Y_____N_____

(1) If the release was from the tank system, was as much of the waste as necessary removed within 24 hours or at the earliest practicable time after its detection to allow inspection and repair to be performed? Y_____N_____

(2) If the release was to the secondary containment system, were all released materials removed within 24 hours or in as timely a manner as possible to prevent harm to human health and the environment? Y_____N_____

b. If there was a visible release to the environment, was a visual inspection conducted by the owner/operator? Y_____N_____

(1) Was further migration of the leak or spill to soils or surface water prevented? Y_____N_____

(2) Was the visible contamination removed and properly disposed of? Y_____N_____

c. Was the release to the environment reported to the Department within 24 hours of detection? Y_____N_____

NOTE: A leak or spill of less than or equal to a quantity of one pound of hazardous waste and that is immediately contained and cleaned up is exempted from this requirement.

d. Was a report to the Department, as specified in 264.196(d)(3), submitted within 30 days for nonexempt releases? Y_____N_____

e. If a leak was the cause of a release, was the system repaired before being returned to service? Y_____N_____

f. If the leak caused a release to the environment from a component of a tank system without secondary containment, was that component provided with secondary containment as specified in 264.193 before it was returned to service (see Item #6)? Y_____N_____

NOTE: If the leaking component is aboveground and can be inspected visually, secondary containment does not need to be provided after repair.

If a component was replaced in order to repair the system, the owner or operator must comply with the standards for new tank systems or components 264.192 and 264.193 (see item #4).

g. Was a major repair performed to return the tank system back to service? Y_____N_____

(1) If yes, was a certification of this major repair done by an independent, qualified, registered P.E. before the system was returned to service? Y_____N_____

(2) Was this certification submitted to the department within 7 days after returning the system to service? Y_____N_____

Comments:

10. Closure and post-closure care (264.197).

a. At closure of a tank system, did the owner/operator remove or decontaminate all waste residues, contaminated containment system components, contaminated soils, and structures and equipment contaminated with waste, and manage them as hazardous waste? Y_____N_____

Comments:

11. Special requirements for ignitable or reactive wastes (264.198).

a. Are ignitable or reactive wastes placed in tanks? Y_____N_____

(1) If yes, are they treated, rendered, or mixed before or immediately after placement in the tank system so that:

The resulting waste, mixture, or dissolved material no longer meet the definition of ignitable or reactive waste and 264.17(b) is complied with? Y_____N_____

OR

The waste is stored or treated in such a way that is protected from any material or conditions that may cause the waste to ignite or react? Y_____N_____

NOTE: If yes, use narrative explanation sheet to describe separation and confinement procedures. If no, use narrative explanation sheet to describe sources of ignition or reaction.

OR The tank system is used solely for emergencies? Y_____N_____

b. Are protective distances maintained between the tank accumulation areas and any public ways, streets, alleys, or adjoining property lines that can be built upon as required in Tables 2-1 through 2-6 of the National Fire Protection Association's "Flammable and Combustible Liquids Code"? Y_____N_____

Comments:

12. Special requirements for incompatible wastes (264.199).

a. Is there evidence that incompatible wastes were in the same tank? Y_____N_____

NOTE: If yes, use narrative explanation sheet to state the results (e.g. signs such as fire, toxic mists, heat generation, bulging containers, etc.) and whether 264.17(b) was complied with.

b. If a waste is to be placed in a tank that previously held an incompatible waste or material, was that tank washed? Y_____N_____

NOTE: If yes, describe the washing procedure on the narrative explanation sheet.

c. If no, was 264.17(b) complied with? Y_____N_____

13. Specific Conditions on Permit:

_____Y_____N_____

_____Y_____N_____

_____Y_____N_____

_____Y_____N_____

safety-kleen®

RECEIVED
NOV 26 1996
DEPT OF ENV PROTECTION
WEST PALM BEACH

November 26, 1996

STATE OF FLORIDA
DEPT. OF ENVIRONMENTAL PROTECTION
TIFFANY R. HOLMES
400 N. CONGRESS AVENUE
P.O. BOX 15425
WEST PALM BEACH, FL 33416

Dear Ms. Holmes:

In response to your concerns about the waste from Cys Linen and the description on label in regards to Facility Log. I personally visited this account on 11-19-96 after your inspection was completed. The owner Mr. A. Feldman informed me he has always used mineral spirits in his cleaning operation.

After investigating further I found that Safety-Kleen supplied the two sets of labels for this customer. One set for mineral spirits the other for Triclorotriflourethane, the SK Rep failed to check which labels he was to apply to containers. Rep has been disciplined for his failure to apply proper labels.

Sincerely,

Tim Sholl
Branch Manager

cc: Jon Ercole

8755 NW 95TH STREET MEDLEY, FL 33178 305/884-0123

PRINTED ON RECYCLED PAPER

safety-kleen

DISCIPLINARY NOTICE TO EMPLOYEE

Date: 11-25-96

Employee Name: ROY TERAN

Employee Number: 3211 Position: SMR

Facility/Department: MEDLEY / SPECIAL MARKETS

RECEIVED
NOV 26 1996
DEPT OF ENV PROTECTION
WEST PALM BEACH

Your performance/conduct is unsatisfactory for the following reasons:

On Nov. 12, 1996, you picked up and transported waste from Cy's Linen. However, the labels on the drums didn't match the manifest. This obviously means that the drums had the wrong descriptions on the labels. It is of extreme importance that you verify your manifest to your labels to avoid errors like this. If this where to reaccur, further disciplinary action will result.

THE FOLLOWING IMPROVEMENTS ARE REQUIRED BY _____. (Indicate a specific program for improvement, the measurement criteria, and the consequence if improvement is not achieved. Attach additional pages if necessary.)

Get into the routine of checking and verifying your manifest and drums to avoid this incident from reaccuring.

By signing your name below, you acknowledge that this disciplinary notice has been reviewed with you.
If you would like to submit comments regarding this disciplinary notice, you are encouraged to submit them in writing within ten (10) days.

Roy Teran
(Employee's Signature)

11-25-96
(Date)

(Supervisor/Manager Signature)

11-25-96
(Date)

Copy to: Corporate Personnel file, Facility Personnel file, Employee

600-08-60

safety-kleen.

INTER-OFFICE MEMO

MEMORANDUM

SUBJECT: DRY CLEANING TRANSFER WASTE DATE: 11/20/96

TO: OFFICE STAFF FROM: TIM SHOLL

WHEN LOGGING-IN DRY CLEANING TRANSFER WASTE WE MUST SHOW WASTE IN FRS01 INDICATING TRANSFER. DO NOT LOG-IN WASTE IN DRUM01 EFFECTIVE 11/20/96.

Jeanne Sons

Jennifer Boggs

RECEIVED
NOV 26 1996
DEPT OF ENV PROTECTION
WEST PALM BEACH

safety-kleen

INTER-OFFICE MEMO

MEMORANDUM

SUBJECT: WAREHOUSE SOP DATE: 11/20/96

TO: WAREHOUSE PERSONNEL FROM: TIM SHOLL

EFFECTIVE IMMEDIATELY 11/20/96 ALL DEBRIS TO BE REMOVED FROM UNDER DOCK DAILY. ANY DAMPNESS IN SUMP & UNDER DOCK TO BE REMOVED ON DAILY BASIS.

AQUEOUS BRAKE CLEANING STATION MUST HAVE LID ON WHEN NOT IN USE.

RECEIVED
NOV 26 1996
DEPT OF ENV PROTECTION
WEST PALM BEACH

Revision 7--04-10-1996

safety-kleen®

RECEIVED
NOV 6 1996
DEPT OF ENV PROTECTION
WEST PALM BEACH

EMERGENCY PHONE NUMBERS

Emergency Coordinators:

Primary: Tim Sholl
9001 SW 49 St.
Cooper City, FL
33328
H. 305-680-3622
O. 305-884-0123
Beeper 305-650-5584

Alternate: Peter Cordero
2951 SW 135th Ave.
Miami,FL
33175
H. 305-225-7535
O. 305-650-5578
B. 305-650-5578

Emergency Notification Phone Numbers:

Safety-Kleen 24 hour EHS 800-468-1760

National Response Center: 800-424-8802

FDEP SE District, 400 N. Congress Ave. West Palm Beach, FL 33416 561 -681-6600 (M-F) Except Holidays. All other times call DEM

Florida Department of Emergency Management (DEM) 904-488-1320

Dade County Environmental Resources Management (DERM) Mr. Mike Graham 305-375-3376

Emergency Teams to be Notified

Metro Dade Fire Department
8175 NW 12th Street
Miami, FL 33126
305-470-1760 or 911

Medley Police Department
7331 NW 74th Street
Medley,FL 33166
305-887-9541 or 911

AMI-Palmetto General Hospital
2001 West 68th Street
Hialeah, FL 33016
305-823-5000

O.H. Materials Company
P.O.Box 551
Findlay, OH 45839
800-537-9540
Primary Clean-up Contractor

Ryckmans Emergency Action Team Consulting Team (REACT)
1733 S.Vanderventer
St. Louis, MO 63146
800-325-1398
Secondary Clean-up Contractor

Objectives Check List For Session One

Objective	Your Initials	Manager's Initials
You can give a general description of the type of business Safety-Kleen is in.		
You can explain your job according to the Job Description.		
You can explain how your job fits in with the Regional Organizational Chart.		
You can give a basic description of the branch including where to park, eat, smoke, the location of your locker, the location of the Return & Fill, etc.		
You can explain the main lines of business, what Recycle Centers do and what an Accumulation Center and Distribution Center is.		
You can explain the basic benefits you will receive and your compensation.		

Signature _____ Date 11-21-96

Manager's Signature _____ Date 11-21-96

RECEIVED
NOV 26 1996
DEPT OF ENV PROTECTION
WEST PALM BEACH

Objectives Check List For Session Two

Objective	Your Initials	Manager's Initials
You can describe ways in which you might be injured on the job or acquire illnesses and how you might prevent them.		
You can recite general safety rules.		
You can describe OSHA's "Hazard Communication Standard".		
You can explain the purpose of an MSDS.		
You can recite what is in the eleven sections of a Safety-Kleen MSDS.		
You can explain the physical and chemical hazard classifications of chemicals from an MSDS.		
You can explain how to clean up a spill.		
You can explain exposure and first aid procedures.		
You can describe how fires and explosions may occur and how to prevent them.		
You can demonstrate how to clean and maintain respirators.		
You can demonstrate the proper respirator fit testing protocol.		
You can explain the types of protective equipment needed for the various jobs you will do.		
You have been fit tested by a Certified Trainer and have been issued a Respirator Protection Certificate of Completion.		

Signature Horacio Dominguez Date 11-21-96

Manager's Signature _____ Date 11-21-96

Objectives Check List For Session Three

Objective	Your Initials	Manager's Initials
You can explain some basic chemical properties of chemicals Safety-Kleen receives.		
You can distinguish between hydrocarbons and halogenated hydrocarbons.		
You can describe Safety-Kleen's Waste Analysis Plan.		
You can distinguish between a generator and a TSDF according to RCRA.		
You can explain what "hazardous waste" is.		
You can explain what a "contingency plan" is and what to do in case the "contingency plan" is put into effect.		
You can describe the permit process.		
You can explain security in terms of RCRA.		
You can explain what an FMIR is.		
You can describe an EPA and OSHA inspection.		
You can describe a customer audit.		
You can describe the inspections done at the branch.		

Signature Horacio Rodriguez Date 11-21-96

Manager's Signature [signature] Date 11-21-96

Objectives Check List For Session Five

Objective	Your Initials	Manager's Initials
Required for All		
You understand the difference between a hazardous material and a hazardous waste.		
You can describe the proper container labeling requirements under EPA, OSHA and DOT.		
You can correctly discard items used while handling hazardous waste.		
You can explain the seven basic parts of a manifest.		
You can correctly handle hazardous material/waste transfer.		
You can spot discrepancy between items on a manifest and the waste being received.		
You can correctly stop leaks and overpack drums.		
Optional for Sales Representatives		
You can correctly wrap and prepare shipments of hazardous waste for a Safety-Kleen Accumulation Center or Recycle Center.		
You know when to deny materials or wastes entry to the facility due to permit restrictions.		
You can operate the drum washer correctly.		
You can alert management when the storage capacity at the facility is at its limit.		

Signature HORACIO Dominguez **Date** 11-21-96

Manager's Signature M Shall **Date** 11-21-96

Objectives Check List For Session Six

Objective	Your Initials	Manager's Initials
Required for All		
You can safely lift and transport objects.		
You can use mechanical means to safely lift and transport objects.		
You can use ladders, tools and work on elevated platforms safely.		
You can explain how to keep chemicals from being tracked by using decontamination methods.		
You can recognize and report any contractor hazards.		
You understand the Safety-Kleen Branch Permitting System.		
You can explain the dangers of flammable and extremely flammable materials.		
Additional For Material Handlers/Optional for Sales Representatives		
You can explain basic forklift safety.		
You can explain basic forklift operation.		
You can operate a forklift in special situations .		
You have demonstrated competency in forklift operation, inspection and safe operations.		
You have been certified to operate a forklift.		

Signature HORACIO DOMINGUEZ **Date** 11-21-96

Manager's Signature _____ **Date** 11-21-96

Objectives Check List For Session Seven

Objective	Your Initials	Manager's Initials
You can recognize emergency warning alarms and can respond quickly in emergencies.		
You can distinguish between small and large fires.		
You can put out fires with appropriate fire extinguishers.		
You can distinguish between small spills, large spills and releases.		
You can correctly clean up small spills.		
You can recite or demonstrate the correct procedures for large spills.		
You can recite or demonstrate the correct procedures for evacuation.		
You can recite or demonstrate the correct procedures regarding injured employees or contractors.		
You know where to find the contingency plan in the Part B Permit.		
You are CPR and First Aid Certified (**Suggested** but not **Required**).		

Signature _____ **Date** 11-21-96

Manager's Signature _____ **Date** 11-21-96

Supplement 8-5

ENVIRONMENT, HEALTH AND SAFETY TRAINING SERIES

PREPAREDNESS, PREVENTION, AND CONTINGENCY PLANS

INFORMATION SHEET

1. Names you should know:

   Emergency Coordinator: Tim Sholl, Branch Manager

   Alternate Emergency Coordinator: Peter Cordero, BAM

   Regional Environmental Engineer: Jon Ercole

2. Telephone numbers you should know:

   24 Hour Emergency Coordinator: 305-680-3622 ~~1800/468-1760~~

   Regional Environmental Engineer: 1800/759-7243

   SK 24 Hour Emergency Response: 1800/468-1760

   State Environmental Agency: 561/681-6600

   Local Emergency Response Team: ___/___-___

   Local Fire Department: 305/470-1760

   Local Police Department: 305/887-9541

   Designated Hospital: 305/823-5000

   Local Posion Control Center: ___/___-___

Please print or type. (Form designed for use on [redacted]12-pitch) typewriter.)

Form Approved. OMB No. 2050-0039 Expires 9-30-96

UNIFORM HAZARDOUS WASTE MANIFEST

1. [redacted]erator's US EPA ID No. FLD982079998 | Manifest Docume[redacted] 10469

2. Page 1 of 1 | Information in the shaded areas is not required by Federal law.

3. Generator's Name and Mailing Address
CYS LINEN SVC
510 W 28th ST FL 33010
HIALEAH
4. Generator's Phone (305) 887-9441

A. State Manifest Document Number —

B. State Generator's ID

5. Transporter 1 Company Name: SAFETY KLEEN CORP | 6. US EPA ID Number: ILD984908202

C. State Transporter's ID

D. Transporter's Phone 305 884-0123

7. Transporter 2 Company Name | 8. US EPA ID Number

E. State Transporter's ID

F. Transporter's Phone

9. Designated Facility Name and Site Address 000042
SAFETY-KLEEN CORP
581 MILLIKEN DR SE
HEBRON OH 43025 | 10. US EPA ID Number: OHD 980587364

G. State Facility's ID

H. Facility's Phone 614 929 3532

11. US DOT Description (Including Proper Shipping Name, Hazard Class and ID Number)	HM	12. Containers No.	12. Containers Type	13. Total Quantity	14. Unit Wt/Vol	I. Waste No.
a. RQ WASTE COMBUSTIBLE LIQUID, N.O.S (PETROLEUM NAPHTHA) NA 1993 PG III (D001, D039) (ERG # 128) 6.7#/GAL	X	08	DF	0880	P	D001 D039
b. RQ WASTE COMBUSTIBLE LIQUID N.O.S (PETROLEUM NAPHTHA) NA 1993 PG III (D001, D039) (ERG # 128) 6.7#/GAL	X	01	DM	0110	P	D001 D039
c.						
d.						

J. Additional Descriptions for Materials Listed Above

K. Handling Codes for Wastes Listed Above

15. Special Handling Instructions and Additional Information
EMERGENCY RESPONSE # 800 468-1760 24 HR 92737832 3-097-52-2021
SKDOT#(A) 569 (B) 569 M10469

16. **GENERATOR'S CERTIFICATION:** I hereby declare that the contents of this consignment are fully and accurately described above by proper shipping name and are classified, packed, marked, and labeled, and are in all respects in proper condition for transport by highway according to applicable international and national government regulations.

If I am a large quantity generator, I certify that I have a program in place to reduce the volume and toxicity of waste generated to the degree I have determined to be economically practicable and that I have selected the practicable method of treatment, storage, or disposal currently available to me which minimizes the present and future threat to human health and the environment; **OR,** if I am a small quantity generator, I have made a good faith effort to minimize my waste generation and select the best waste management method that is available to me and that I can afford.

Printed/Typed Name	Signature	Date (Month Day Year)
E. S. FELDMAN		11 14 96

17. Transporter 1 Acknowledgement of Receipt of Materials

Printed/Typed Name	Signature	Date (Month Day Year)
RON TERAN		11 14 96

18. Transporter 2 Acknowledgement of Receipt of Materials

Printed/Typed Name	Signature	Date (Month Day Year)

19. Discrepancy Indication Space

20. Facility Owner or Operator: Certification of receipt of hazardous materials covered by this manifest except as noted in item 19.

Printed/Typed Name	Signature	Date (Month Day Year)

EPA Form 8700-22 (Rev. 9-88) previous editions obsolete

SAFETY-KLEEN CORP

90290 6

ORIGINAL-RETURN TO GENERATOR

Public reporting burden for this collection of information is estimated to average: 37 minutes for generators, 15 minutes for transporters, and 10 minutes for treatment, storage and disposal facilities. This includes time for reviewing instructions, gathering data, and completing and reviewing the form. Send comments regarding the burden estimate, including suggestions for reducing this burden, to: Chief, Information Policy Branch, PM-223, U.S. Environmental Protection Agency, 401 M Street, SW, Washington, DC 20460; and to the Office of Information and Regulatory Affairs, Office of Management and Budget, Washington, DC 20503.

EPA PERIODIC REPORT
BRANCH FILE COPY

TO: 3-097-02 **DATE:**

NAME OF REPORT: FL HAZ ANNUAL

TIME FRAME COVERED: 1995

RECEIVED
NOV 26 1996
DEPT OF ENV PROTECTION
WEST PALM BEACH

Attached is your branch copy of the above EPA report.

You are responsible for permanently retaining this copy in tact in EHS file 2000.

If you have any questions, please do not hesitate to contact your Manifest Specialist.

Make sure all applicable pages have signatures (copies from original submittal).

(brpt.doc)

SAFETY-KLEEN CORP.
1000 N. Randall Road, Elgin, IL 60123

CERTIFIED MAIL Z 196 137 812

FL DEP
ATTN: JACK GRIFFITH
2600 BLAIR STONE RD
TALLAHASSEE, FL 32399-2400

RE: ANNUAL/BIENNIAL HAZARDOUS WASTE REPORT SUBMITTAL

Dear Sir / Madam:

Enclosed you will find the report covering the following Safety-Kleen Corp. location

3-097-02	Medley	FLD984171694

For your convenience, we have included the electronic submittal of the WR forms as well as the hard copy pages.
Should you have any questions, please contact Linda Wierzbicki at 800-669-5840 extension 2161.

Sincerely,

Branch Manager

cc: file
Corp. Manifest Dept.

lheadan1.doc

STATE OF FLORIDA
DEPARTMENT OF ENVIRONMENTAL PROTECTION

ENFORCEMENT TELEPHONE LOG

CASE NAME: Safety-Kleen DATE: 11-19-96 TIME: 4:00 pm

CONTACT: Tim Sholl OF: Safety-Kleen **CALLED** / WAS CALLED

PHONE #: _____

****

DISCUSSION:

Tim called regarding the inspection I did today at Safety-Kleen (SK). At the time of inspection, they could not locate a copy of their biennial report. He phoned to tell me that they did find a copy of it there at the facility after we left.

PREPARED BY: Tiffany Holmes

safety-kleen®

May 15, 1996

Mr. John Jones, P.E.
Hazardous Waste Supervisor
Florida Department of Environmental Protection
400 N. Congress Ave.
West Palm Beach, FL 33401

RECEIVED
MAY 17 1996
DEPT OF ENV PROTECTION
WEST PALM BEACH

Re: Unmanifested Waste Report
Safety-Kleen Corp. Medley Branch
FLD 984-171-694

Dear Mr. Jones,

On May 6th, 1996, we received five (5) thirty (30) gallon drums of waste combustible liquid, N.O.S. (petroleum naphtha) and on May 13, 1996 we received two (2) additional thirty (30) gallon drums of the same waste from Safety-Kleen Corp. recycle center located in Lexington, SC. These drums were shipped without a manifest by mistake with a load of non-hazardous oil filters which are recycled at U.S. Foundry in Medley, Florida.

These drums are being returned to the Safety-Kleen facililty in South Carolina on a hazardous waste manifest with a land disposal restriction notice.

The South Carolina facility has been notified of the shipping error and is taking appropriate measures to ensure that this incident will not occur. This shipment is outlined on the unmanifested waste report. Questions may directed to me at 407-734-2560. Thank you for your understanding regarding this unintentional incident.

Sincerely,

Jon Ercole,CHMM
Environmental, Health and Safety Manager

Enc: unmanifested waste report

cc D.A.Ridley, Regional Environmenal Manager

PRINTED ON RECYCLED PAPER

UNMANIFESTED WASTE REPORT
PAGE 1 of 2

CERTIFIED RETURN
RECEIPT REQUESTED
P ____ ____ ____

HAZARDOUS WASTE REPORT

Use this form as a cover for all required reports.

I. TYPE OF HAZARDOUS WASTE REPORT

PART A: GENERATOR ANNUAL REPORT
THIS REPORT IS FOR THE YEAR ENDING DEC 31. 19

PART B: FACILITY ANNUAL REPORT
THIS REPORT FOR YEAR ENDING DEC 31. 19

PART C: UNMANIFESTED WASTE REPORT
THIS REPORT IS FOR A WASTE RECEIVED (day, mo., & yr.) 05-06-1996

II. INSTALLATION'S EPA I.D. NUMBER
F FLD984171694 T/A 1 — 05-13-1996

III. NAME OF INSTALLATION
SAFETY-KLEEN CORP

IV. INSTALLATION MAILING ADDRESS
STREET OR P.O. BOX
3 8755 NW 95TH STREET

CITY OR TOWN | ST. | ZIP CODE
4 MEDLEY | FL | 33178

V. LOCATION OF INSTALLATION
STREET OR ROUTE NUMBER
5 8755 NW 95TH STREET

CITY OR TOWN | ST. | ZIP CODE
6 MEDLEY | FL | 33178

VI. INSTALLATION CONTACT
NAME (last and first) | PHONE NO. (area code & no.)
2 SHOLL, TIM | 305-884-0123

VII. TRANSPORTATION SERVICES USED (for Part A reports only)
List the EPA Identification Numbers for those transporters whose services were used during the reporting year represented by this report.

VIII. COST ESTIMATES FOR FACILITIES (for Part B reports only)

A. COST ESTIMATE FOR FACILITY CLOSURE	B. COST ESTIMATE FOR POST CLOSURE MONITORING AND MAINTENANCE (disposal facilities only)
G $	$

IX. CERTIFICATION

I certify under penalty of law that I have personally examined and am familiar with the information submitted in this and all attached documents, and that based on my inquiry of those individuals immediately responsible for obtaining the information, I believe that the submitted information is true, accurate, and complete. I am aware that there are significant penalties for submitting false information, including the possibility of fine and imprisonment.

A. PRINT OR TYPE NAME	B. SIGNATURE	C. DATE SIGNED
JON ERICKE	Jon Ericke	5/15/96

FACILITY REPORT—PARTS B & C

FOR OFFICIAL USE ONLY (Items 1 & 2)	1. DATE RECEIVED	XVI. TYPE OF REPORT (enter an "X")	XVII. FACILITY'S EPA I.D. NO.
	- - -19	☐ PART B ☒ PART C	G FUD984171694 1
	2. RECEIVED BY		

XVIII. GENERATOR'S EPA I.D. NO.	XX. GENERATOR'S ADDRESS (street or P.O. box, city, state, & zip code)
SCD077995488	130-A FRONTAGE RD. LEXINGTON, SC 29073

XIX. GENERATOR NAME (specify)

SAFETY-KLEEN CORP.

XXI. WASTE IDENTIFICATION

LINE NUMBER	A. DESCRIPTION OF WASTE	B. EPA HAZARDOUS WASTE NUMBER (see instructions)	C. HANDLING METHOD (enter code)	D. AMOUNT OF WASTE	E. UNIT OF MEASURE (enter code)
1	RQ WASTE COMBUSTIBLE LIQUID, NOS (PETROLEUM NAPTHA) NA 1993 PG III (D001, D006, D008, D039, D040) (ERG # 27)	D001 D006 D008 D039	S01	210 ~~250~~	G
2		D040			
3					
4					
5					
6					
7					
8					
9					
10					
11					
12					

5/16

XXII. COMMENTS (enter information by line number—see instructions)

1. SAFETY-KLEEN CORP. WAS THE SOLE TRANSPORTER IN THE SHIPMENT. USEPA TRANSPORTER ID NO. ILD 984 908 202.

Florida Department of
Memorandum — Environmental Protection

TO: Larry Morgan
Office of General Council

THROUGH: Jeff Smith, Environmental Manager, Hazardous Waste C/E

FROM: Cheryl Marx, Environmental Supervisor II, Hazardous Waste C/E

DATE: April 14, 1995

SUBJECT: Case deactivation of OGC Case NO. 95-0538, DEP VS Safety-Kleen Corporation, Inc.

****

CASE NAME: DEP VS Safety-Kleen Corporation (Medley)

COUNTY: Dade PROGRAM: Hazardous Waste

OGC CASE NO. 95-0538 Attorney: NA

Amount of assessment if any: $6,150.00

Paragraph No.	Date Complete	Comments
Short Form CO	4/7/95	Recd signed CO & payment 3/20/95

Case Deactivation Request

Pursuant to the executed Short Form Consent Order OGC Case No.: 95-0538 dated 4/7/95, DEP VS Safety-Kleen Corporation, the Respondent has met the obligations. The District therefore recommends that this case be deactivated.

cc: West Palm Beach DEP File
File, Reporting Coordinator

safety-kleen®

RECEIVED
MAR 27 1995
DEPT OF ENV PROTECTION
WEST PALM BEACH

March 24, 1995

Certified Mail
Return Receipt Requested

Carlos Rivero-deAguilar
Director of District Management
Florida Department of Environmental
Protection
Southeast District
P.O. Box 15425
West Palm Beach, Florida 33416

Re: Short Form Consent Order in Case of DEP v. Safety-Kleen Corp. (Medley), OGC File No.: 95-0538

Dear Mr. Rivero-deAguilar:

Please find enclosed Safety-Kleen's cashier's checks payable to "The Department of Environmental Protection" in payment of the civil penalties ($5,900) and costs ($250) due pursuant to the above-referenced Consent Order.

Sincerely,

Barbara Lindsey Sims/lh

Barbara Lindsey Sims
Vice President
Environmental Litigation
and Regulation

lh
Encls.

1000 NORTH RANDALL ROAD ELGIN, ILLINOIS 60123-7857 PHONE 708/697-8460 FAX 708/468-8500

NBD

Cashier's Check
NBD Bank
Wheaton, Illinois 60187

No. 310070

70-2114
719

Issuing Location 711 Tyler Creek

Date March 24, 1995

Pay to the order of **THE DEPARTMENT OF ENVIRONMENTAL PROTECTION** U.S. $ **5900.00**

12481

EXACTLY PAY5900CTS U.S. Dollars

SAFETY KLEEN OGC File No.: 95-0538
Name of Remitter AL/ck

Authorized Signature
Asst. Supr.

"Pollution Recovery Fund"

NBD

Cashier's Check
NBD Bank
Wheaton, Illinois 60187

No. 310067

70-2114
719

Issuing Location 711 Tyler Creek

Date march 24, 1995

Pay to the order of **THE DEPARTMENT OF ENVIRONMENTAL PROTECTION** U.S. $ **250.00**

12480

EXACTLY PAY250CTS U.S. Dollars

SAFETY KLEEN OGC File No.: 95-0538
Name of Remitter AL/ck

Authorized Signature
Asst Supr.

"Water Quality Assurance Trust Fund"

3/27 HW

$5,900.- paid 4/13/95

$ 250.- 4/13/95

MCY

STATE OF FLORIDA
DEPARTMENT OF ENVIRONMENTAL PROTECTION

233807

RECEIPT FOR APPLICATION FEES AND MISCELLANEOUS REVENUE

Received from Safety Kleen Corporation Date April 7, 1995

Address 1000 North Randall Road Elgin Ill. 60123 Dollars $ 6,150.00

Applicant Name & Address Barbara Sims Same

Source of Revenue Safety Kleen Corp. Inc. 95-0538

Revenue Code 012008 - $2,900.00 (Ck # 310070 018003 - $250.00 (# 310067 Application Number Consent Order

By B J Jones

Legal Case Tracking System 19-APR-1995_14:27:13
Case Record (Part 1)

OGC Number: 95-0538-_-13-HW District: 4 SOUTHEAST County: 13 DADE
Status: O OPEN Mode: E ENFORCEMENT

Style of Case: SAFETY-KLEEN;_DEP_VS.
Alias Name: DEP_VS_SAFETY-KLEEN_CORPORATION
Site Name: SAFETY-KLEEN/MEDLEY

Lead Attorney: KTB KIMBERLY__ T BRENNEN Supervisor Initials: DKT
2nd Attorney: ___ _____ _ _____ Supervisor Initials: ___

Primary Program Area	Date		OGC Case Activity
HW HAZARDOUS_WASTE	07-FEB-0095	DSFO	CASE_OPENED_IN_DISTRICT_W
	07-MAR-1995	ACO_	ADMIN._CASE_OPENED_IN_OGC
Secondary Program Areas			
__			
__			

Case Origin: DISTRICT Case in Litigation ? N

Count: *1 <Replace>

safety-kleen®

RECEIVED
MAR 27 1995
DEPT OF ENV PROTECTION
WEST PALM BEACH

March 22, 1995

Certified Mail
Return Receipt Requested

Carlos Rivero-deAguilar
Director of District Management
Florida Department of Environmental
Protection
Southeast District
P.O. Box 15425
West Palm Beach, Florida 33416

Re: Proposed Settlement by Short Form Consent Order in Case of DEP v. Safety-Kleen Corp., OGC File No.: 95-0538

Dear Mr. Rivero-deAguilar:

Please find enclosed the original Short Form Consent Order which has been executed by Scott E. Fore on behalf of Safety-Kleen Corp. Please return a fully executed copy of the Short Form Consent Order to my attention at the address below. Safety-Kleen will submit the checks for civil penalties and costs within twenty days as required by the Consent Order.

Sincerely,

Barbara Lindsey Sims

Barbara Lindsey Sims
Vice President
Environmental Litigation
and Regulation

lh
Encl.
cc: Rich Morris

1000 NORTH RANDALL ROAD ELGIN, ILLINOIS 60123-7857 PHONE 708/697-8460 FAX 708/468-8500

Department of Environmental Protection

Southeast District
P.O. Box 15425
West Palm Beach, Florida 33416

Lawton Chiles
Governor

Virginia B. Wetherell
Secretary

MAR 15 1995

CERTIFIED MAIL
RETURN RECEIPT REQUESTED

Ms. Barbara Sims
Vice President of Environmental Litigation
Safety-Kleen Corporation
1000 North Randall Road
Elgin, Illinois 60123

Dade County
HW-Safety-Kleen/Medley

RE: Proposed Settlement by Short Form Consent Order in Case of DEP vs. Safety-Kleen Corporation, Inc., OGC File No.: 95-0538.

Dear Ms. Sims:

The purpose of this letter is to complete the settlement of the violations previously identified by the Department of Environmental Protection ("DEP") in the Warning Letter (#WL95-003HW13SED) dated February 17, 1995, which is attached. The corrective actions required to bring your facility into compliance have been performed. However, you must pay to the DEP the amount of $5,900.00 in civil penalties to complete settlement of the violations described in the attached Warning Letter, along with $250.00 to reimburse the DEP's costs for a total of $6,150.00. Both payments must be made to "The Department of Environmental Protection" by certified check or money order and shall include thereon the OGC number assigned above. The civil penalty payment should include the notation "Pollution Recovery Fund" and the payment reimbursing DEP for costs should include the notation "Water Quality Assurance Trust Fund." The payments shall be sent to the Southeast District Office, P.O. Box 15425, West Palm Beach, Florida, 33416. The payments shall be sent within twenty days of your signing this letter.

Your signing of this letter where indicated at the end of page two constitutes your acceptance of DEP's offer to settle this case on these terms. If you sign this letter, please return it to DEP at the address above. DEP will then countersign the letter and file it with the Clerk of the DEP. When the signed letter is filed with the Clerk, the letter shall constitute a Consent Order, which is final agency action of the DEP, the terms and conditions of which may be enforced in a court of competent jurisdiction pursuant to Sections 120.69 and 403.121, Florida Statutes. Failure to comply with the terms of this letter once signed by you and entered by the DEP Clerk shall constitute a violation of Section 403.161(1)(b), Florida Statutes.

UNITED STATES POSTAL SERVICE

Official Business

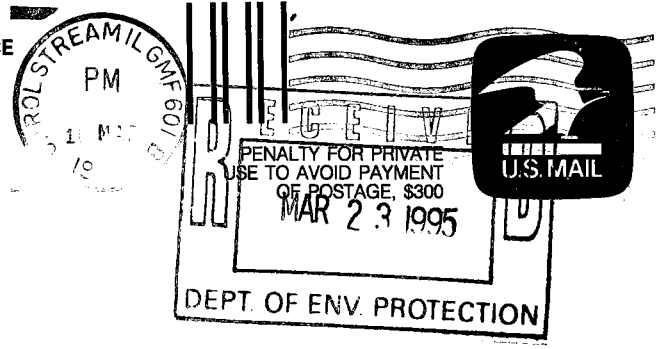

Print your name, address and ZIP Code here

Ms. Cheryl Mary (Mapes)

STATE OF FLORIDA
Dept. of Environmental Protection
Southeast Florida District
P.O. Box 15425
West Palm Beach, Florida 33416

SENDER:

Complete items 1 and/or 2 for additional services.

- Complete items 3, and 4a & b.
- Print your name and address on the reverse of this form so that we can return this card to you.
- Attach this form to the front of the mailpiece, or on the back if space does not permit.
- Write "Return Receipt Requested" on the mailpiece below the article number.
- The Return Receipt will show to whom the article was delivered and the date delivered.

I also wish to receive the following services (for an extra fee):

1. ☐ Addressee's Address
2. ☐ Restricted Delivery

Consult postmaster for fee.

3. Article Addressed to:

Ms. Barbara Sims, Vice Pres.
Environmental Litigation
Safety-Kleen Corporation
1000 North Randall Road
Elgin, Illinois 60123

4a. Article Number

P893-730-789

4b. Service Type

☐ Registered ☐ Insured
☒ Certified ☐ COD
☐ Express Mail ☐ Return Receipt for Merchandise

7. Date of Delivery

MAR 18 1993

5. Signature (Addressee)

6. Signature (Agent)

8. Addressee's Address (Only if requested and fee is paid)

PS Form **3811**, December 1991 ☆U.S. GPO: 1993—352-714 **DOMESTIC RETURN RECEIPT**

Is your RETURN ADDRESS completed on the reverse side?

Thank you for using Return Receipt Service.

STATE OF FLORIDA
DEPARTMENT OF ENVIRONMENTAL PROTECTION

ENFORCEMENT TELEPHONE LOG

CASE NAME: Safety-Kleen/Medley DATE: 3/3/95 TIME: 1:40pm

CONTACT: Jon Ercole OF Regional Manager for Safety-Kleen CALLED

PHONE #: (305) 884-0123

****

DISCUSSION:

Mr. Ercole called to give me the name of a Safety-Kleen Corporate officer who could sign the short form Consent Order. He gave me the following information:

Ms. Barbara Sims
Vice President of Environmental Litigation
Safety-Kleen Corporation
1000 North Randall Road
Elgin, Illinois 60123

I told Mr. Ercole that I would try to get the paperwork sent out by the beginning of next week.

PREPARED BY: Cheryl Mayx

STATE OF FLORIDA
DEPARTMENT OF ENVIRONMENTAL PROTECTION

ENFORCEMENT MEETING DOCUMENTATION

Attendees: See Meeting Attendance list

Location: SED DEP Office **Date:** March 2, 1995 **Time:** 2:00pm

Subject: Safety-Kleen/Medley (SKM) - Enforcement Meeting.

Meeting Requested By: Jon Ercole (Regional Manager for Safety-Kleen)

Meeting Objectives:

1. To discuss the hazardous waste violations noted during the 11/30/94 hazardous waste compliance inspection.
2. To discuss areas of concern including documentation of late manifests and response time to repair malfunctioning safety equipment.
3. To resolve hazardous waste violations via a short form Consent Order with a Civil Penalty of $6,900.00 plus $250.00 for DEP cost and expenses.

****

Notes: Introductions were made and the Meeting Attendance list was passed around. Mr. Ercole introduced Mr. Tim Sholl, the new Branch Manager at SKM. Mr. Sholl has worked for SK for the past five years at other Florida Branches.

We went over the list of violations and the corresponding civil penalties. I explained the DEP method of calculating Civil Penalties. Mr. Ercole said that he had only joined SK in September of 1994 and his area of expertise was in air compliance, not RCRA. Mr. Ercole asked specific questions regarding the use of the LDRC. Mr. McKee left the room to clarify a couple of points regarding the use of LDRC on shipments covered by a tolling agreement. When Mr. McKee returned to the room he explained that shipments with a tolling agreement only needed the blanket LDRC. The shipments of bulked spent mineral spirits need and LDRC, and the drummed waste that is stored in the permitted storage facility needs the LDRC. The manifest and accompanying LDRC for transfer wastes remain with that shipment and the transfer facility would not maintain the original manifest or the LDRC. Mr. Sholl asked if he decided to use the LDRC for tolling shipments and one day we discover one is missing if we could cite a violation. I said that according to the 40 CFR they only need to maintain the blanket LDRC (LDRC that accompanied the first waste removal).

Mr. Ercole gave me copies of the LDRC that he had not provided in the letter hand delivered on 12/9/94. I asked him where the originals were. He said that all of the missing LDRC had been replaced by originals or photocopies. I asked Mr. Sholl how he planned to track late arriving signed original manifests. Mr. Sholl said that they now have a tracking system to document late or missing signed original manifests.

Mr. Ercole and Mr. Sholl explained that the malfunctioning high level audio alarm may have been functioning properly. They have since discovered that the alarm button must be pushed for three seconds before the alarm sounds. I explained that even is that alarm were actually working, the the potential for

harm for the other components of that violation would still be moderate. I explained that the District tries to calculate penalties in consistent fashion so as not to set an undesirable precedent. We discussed the importance of keeping accurate inspection logs and quick response to the safety and compliance problems recorded in the logs. Mr. Ercole said he still thinks the penalty for the second violation is too high. I left the meeting for a brief discussion with Jeff Smith. Mr. Smith and I agreed that to change the potential for harm to minor would go against DEP enforcement guidance. I returned to the room and explained this to Mr. Ercole and Mr. Sholl. I told them that I would lower the penalty to the lowest amount in the same block of the matrix, $4,000.00 to $3,000.00, due to their agreeing to post a sign next to the high level alarm regarding the three second delay. Mr. Ercole accepted this offer.

I explained how the violations could be resolved through a short form consent order. Mr. Ercole agreed to resolve the violations via short form consent order and pay a civil penalty of 5,900.00 plus cost and expenses of $250.00. I asked Mr. Ercole who would be authorized to sign the Consent Order. He said that Ms. Della Ridley, the regional environmental manager could sign the Consent Order. I asked him if she is a corporate officer. Mr. Ercole said he did not know. Mr. Ercole said he would call me back on 3/3/95 with the name and address of the person who is authorized to sign a consent order.

Mr. Ercole and Mr. Sholl were given copies of the Meeting Attendance list and Mr. Ercole was given a copy of the inspection checklists that are not normally attached to the facility copy of the report.

****

Agreements/Conclusions Reached:

1. SKM will post a sign by the high level alarm warning the inspection tester that there is a 3 second delay in sounding the alarm.
2. SKM agreed to settle the violations via short form consent order and pay a civil penalty of $5,900.00 and $250.00 for cost and expenses.
3. John Ercole will call me on March 3, 1995 to give me the name and address of a Safety-Kleen corporate officer who can sign the Consent Order.

****

Follow-up Actions/Dates:

1. March 3, 1995: John Ercole will call me to give me the name and address of a Safety-Kleen corporate officer who can sign the Consent Order.

****

Prepared by: Cheryl Marx, E Sup II

MEETING ATTENDANCE

DATE: 3/2/95

COMPANIES: SAFETY-KLEEN/~~BOTH~~ MEDLEY

AGENCIES DEP

NAME	REPRESENTING	TELEPHONE NO.
Cheryl Marx	DEP	407-433-2650 ext 116
Tim Shell	Safety Kleen	305-884-0123
KNOX McKEE	DEP	407/433-2650 EXT. 252
JON ERCOLE	S-K	305-734-2576
Manuel Delonato	DEP	407-433-2650

All parties agreed to the following:

1. Safety-Kleen/Medley will post a sign by the high level alarm stating that there is a 3 second delay when testing the Alarm.
2. Safety-Kleen/Medley agrees to settle the violations noted 11-30-95 via short form Consent Order and pay a civil penalty of $5,900.00 and Cost + Expenses of $250.00 for a total of $6,150.00.
3. Jon Ercole will call Cheryl Marx by 3/3/95 to give her the name and address of a Safety-Kleen Corporate officer who can sign the Consent Order.

Cheryl Marx J. Knox McKee, J. Manuel Delonato

Tim Shell Jon Ercole

South Carolina Department of Health and Environmental Control

Bureau of Solid & Hazardous Waste Mgt.
2600 Bull Street, Columbia, SC 29201
Phone: (803) 734-5200
Emergency & Holidays: (803) 253-6488

3-097-02

OK 2-22

Please print or type. (Form designed for use on elite (12-pitch) typewriter.)

Form Approved OMB No. 2050-0039. Expires 9-30-94

UNIFORM HAZARDOUS WASTE MANIFEST

1. Generator's US EPA ID No.: FLD984171694

MANIFEST DOCUMENT NO.: 50294

2. Page 1 of 1

Information in the shaded areas is not required by Federal law, but is by State law.

3. Generator's Name and Mailing Address
SAFETY-KLEEN CORP.
8755 NORTHWEST 95TH ST
MEDLEY, FL 33178

4. Generator's Phone (305) 884-0122

5. Transporter 1 Company Name: SAFETY-KLEEN CORP.

6. US EPA ID Number: ILD984908202

7. Transporter 2 Company Name:

8. US EPA ID Number:

9. Designated Facility Name and Site Address
SAFETY-KLEEN CORP.
130-A FRONTAGE ROAD
LEXINGTON SC 29073

10. US EPA ID Number: 0-006-30 SCD077995488

A. State Manifest Document Number:

B. State Generator's ID:

C. State Transporter's ID:

D. Transporter's Phone: 803 356-4061

E. State Transporter's ID:

F. Transporter's Phone:

G. State Facility's ID:

H. Facility's Phone: 803 356-4061

11. US DOT Description (Including Proper Shipping Name, Hazard Class, and ID Number)	12. Containers No.	Type	13. Total Quantity	14. Unit Wt/Vol	I. Waste No.
a. RQ WASTE COMBUSTIBLE LIQUID, N.O.S. (PETROLEUM NAPHTHA) NA1993 PGIII(D001) (ERG#27) 6.7 LBS /GAL	0001	TT	6920 (IL) 7100	G	D001 D039
b.					
c.					
d.					

RECEIVED
MAR 2 1995
DEPT OF ENV PROTECTION
WEST PALM BEACH

J. Additional Descriptions for Materials Listed Above.
D018
a. SW 00109 0001
b.
c.
d.

K. Handling codes for wastes Listed Above

15. Special Handling Instructions and Additional Information
EMERGENCY RESP# 1-708-888-4660 (24 HR) 3-097-02 67990663
SKDOT# A: 528 B: C: D:

16. **GENERATOR'S CERTIFICATION:** I hereby declare that the contents of this consignment are fully and accurately described above by proper shipping name and are classified, packed, marked, and labeled, and are in all respects in proper condition for transport by highway according to applicable international and national government regulations and the laws of the State of South Carolina.

If I am a large quantity generator, I certify that I have a program in place to reduce the volume and toxicity of waste generated to the degree I have determined to be economically practicable and that I have selected the practicable method of treatment, storage, or disposal currently available to me which minimizes the present and future threat to human health and the environment; **OR,** if I am a small quantity generator, I have made a good faith effort to minimize my waste generation and select the best waste management method that is available to me and that I can afford.

Printed/Typed Name: Juan R Fonnoso
Signature: [signature]
Date: Month 05 Day 02 Year 94

17. Transporter 1 Acknowledgement of Receipt of Materials
Printed/Typed Name: Wyman Watt
Signature: Wyman Watt
Date: Month 05 Day 02 Year 94

18. Transporter 2 Acknowledgement or Receipt of Materials
Printed/Typed Name:
Signature:
Date: Month Day Year

19. Discrepancy Indication Space
a. [illegible] lbs. c. lbs.
b. lbs. d. lbs.
130. Corrected Vol [illegible]

20. FACILITY Owner or Operator: Certification of receipt of hazardous materials covered by this manifest except as noted in Item 19.
Printed/Typed Name: Ken Wright
Signature: Ken Wright
Month Day Year

GENERATOR

TRANSPORTER

FACILITY

EPA Form 8700-22 (REV. 9/88) Previous Editions are Obsolete (DHEC 1988 REV. 5/89)

2-TSD-RETURN TO GENERATOR

1.0 .786749

ORDER TYPE	TICKET / P.O. NO.	VENDOR NUM	PAGE	ORDER DATE
RETURN ORDER	89053		01 OF 01	04/29/94

FROM CIRCUIT: 99

SCHEDULED SHIP / PICK UP DATE	SCHEDULED DELIVERY DATE
05/02/94	05/02/94

SHIP TO	THRU LOCATION	SHIP FROM
00-630 AFETY-KLEEN CORP /O LEONARD CHAPMAN 30-A FRONTAGE ROAD EXINGTON SC 29073	50294	3-097-91 SAFETY-KLEEN CORP. C/O JORGE CARVAJAL 8755 NW 95TH ST. MEDLEY FL 3317

PART NUMBER	PART DESCRIPTION	PICK QTY.	U/M	ORDER QUANTITY	SHIP QUANTITY	BACK ORDER	RECEIPT QUANTITY	SKID NO.
	QUANTITY CONTROL TOTAL:			7202	6920			
6625	SOLVENT,DIRTY 105/40		GL	~~7206~~	7100			
83102	BULK BTTMS SED & H2O		GL	1				
83103	BULK M/S WATER 4 DIS		GL	1				

EST WGT: 46364 7 CUBES: 7

S. Lupon

ORDER AUTHORIZATION: DATE: PICKED BY/DATE

FROM-LOC DRIVER NAME: Wayne Wato

SHIP DATE	VEH NUM	BEG MILES
5/2/94	SK636	54636

RECEIVED BY: DATE:

DELIVER DATE	END MILE	PARTIAL	COMPLETE
5-2-94	55288		

SPECIAL INSTRUCTIONS:

6816
104

COMPLETED

RECEIVED
MAR 2 1995
DEPT OF ENV PROTECTION
WEST PALM BEACH

SHIP TO COPY-2

ANY EXCEPTIONS TO THIS TRANSFER MUST BE ACKNOWLEDGED BY PHONE IMMEDIATELY.

PART NO. 90104 FORM NO. 700-12-02 REV. 8/91

SAFETY KLEEN SPENT PARTS WASHING SOLVENT
Lexington Recycle Center
Lexington, SC

Date : 5-3-94

Lab #: LR- 394 D

Composite #: LR- D THRU LR- D

Service Center : Medley

Service Center #: 3-097-90

Inventory Control #: 786749

Manifest Document #: 50294

Total Gallons : 7100 (6920)

Tank #: 24

Component/Test	Specification	Results	Method	Analyst
PCB*	< 2 ppm	Neg	SK-9202	RW 5-3-94
Yield by Dist.*	No Spec.	—	SK-9907	—
pH*	6.0-9.5	7.2	SK-9906	RW 5-3-94
Chlorinated Solvents	(Max 1% Wt.)	0.2276	SK-9209	RW 5-3-94
Odor	Typical	Typ	-------	RW 5-3
Flash Point	> 95° F	>105	SK-9401	RW 5-3
Bottoms, Sediment & Water	No Spec.	<1.0 %	SK-9901	RW 5-3

Comments:

Accepted By: Robbie White Date: 5-3-94

Rejected By: Date:

Reason for Rejection:

* Daily Composite Only
< 10 Samples

RECEIVED
MAR 2 1995
DEPT OF ENV PROTECTION
WEST PALM BEACH

Reviewer: [signature] Date: 5-3-94

BB-06/93

SAFETY-KLEEN 105 PARTS WASHING SOLVENT
Lexington Recycle Center
Lexington, SC

Date : 5-2-94

Lab #: LR- 375 C

Composite #: LR-374 C THRU LR-378 C

Service Center : Medley

Service Center #: 3-97-91

Inventory Control #: 786699

Bill of Lading : 89053

Total Gallons : 7200

Tank #: 51

Component/Test	Specification	Results	Method	Analyst
Chlorinated* Solvents				
111	(0.5 % Max)	0.0440		
Perc	(0.5 % Max)	0.1662		
Total	(1.0 % Max)	0.2374	SK-9209	RW 5-2-94
Specific Gravity*	≈ 0.77-0.80	0.78	SK-9903	RW 5-2-94
Odor	Typical	Typ	-------	RW 5-2-94
Color	132/136	LT Green	SK-9921	
Flash Point	> 105° F	>105°	SK-9401	
Anti-Static & Green Dye Addition	No Spec.	Added	N/A	
Appearance	Clear, no suspended matter or sediment	Clear	Visual	

Accepted By: Robbie White Date: 5-2-94

Rejected By: _____ Date: _____

Reason for Rejection: _____

* Daily Composite Only

RECEIVED
MAR 2 1995
DEPT OF ENV PROTECTION
WEST PALM BEACH

Reviewer: [signature] Date: 5-2-94

NOTICE OF LAND DISPOSAL RESTRICTION OF WASTE

TO: SAFETY-KLEEN CORP. (DESIGNATED FACILITY)

EPA ID NO. SCD077995488 (DESIGNATED FACILITY)

ADDRESS: 130-A FRONTAGE ROAD LEXINGTON, S. C. 29073

Under manifest number 50294, the generator noted below is shipping to you a waste determined to be restricted under 40 CFR Part 268. In accordance with 40 CFR Part 268.7, the generator hereby provides notice that the waste is restricted from land disposal. A copy of this form must be kept by the generator and facility for five (5) years from the date of waste shipment.

PLEASE CHECK THE APPROPRIATE BOXES

✓	WASTE NAME	EPA WASTE CODE	THE WASTE MAY CONTAIN THE FOLLOWING RESTRICTED CONSTITUENTS	TREATMENT STANDARD (mg/l) OR METHOD (FOR NON-WASTE WATER)
☑	Waste Petroleum Naphtha (105)	D001,	Ignitable Liquid (High TOC subcategory)	Incineration (INCIN), fuel substitution (FSUBS) or recovery (RORGS) (40 CFR 268.42) (non-waste water)
			Halogenated Organic Compounds (HOC's) ≥ 1000 mg/l	INCIN (40 CFR 268.42) (non-waste water)
		D018,	Benzene	Not Established
		D039,	Tetrachloroethylene	Not Established
☐	Waste Petroleum Naphtha (140)	D001,	Ignitable Liquid (High TOC Subcategory)	INCIN, FSUBS, or RORGS (40 CFR 268.42) (non-waste water)
☐	Waste Petroleum Naphtha (sludges from Safety-Kleen Service Center Operations)	D001,	All of the above, plus:	
		D006,	__ Cadmium	1.0 (non-waste water)
		D007,	__ Chromium	5.0 (non-waste water)
		D008,	__ Lead	5.0 (non-waste water)
		D039,	__ Tetrachloroethylene	Not Established
☐	Waste Compound Cleaning Liquid/ Immersion cleaner 699		HOC's ≥ 1000 mg/l	INCIN (40 CFR 268.42) (non-waste water)
		D006,	__ Cadmium	1.0 (non-waste water)
		D007,	__ Chromium	5.0 (non-waste water)
		D008,	__ Lead	5.0 (non-waste water)
		D018,	__ Benzene	Not Established
		D021,	__ Chlorobenzene	Not Established
		D027,	__ 1, 4-Dichlorobenzene	Not Established
		D039,	__ Tetrachloroethylene	Not Established
		D040,	__ Trichloroethylene	Not Established
☐	Waste Perchloroethylene	F002,	Tetrachloroethylene	5.6 (non-waste water)
☐	Waste Perc. Filters This hazardous debris is subject to the alternative treatment standards of 40CFR 268.45.	F002,	Tetrachloroethylene	5.6 (non-waste water)
☐	Waste Trichlorotrifluoroethane	F002,	Trichlorotrifluoroethane	28.0 (non-waste water)
☐	Waste 1,1,1 Trichloroethane	F002,	1, 1, 1 Trichloroethane	5.6 (non-waste water)
☐	Waste Petroleum Naphtha (Dry Cleaning)	D001,	Ignitable Liquid (High TOC Subcategory)	INCIN, FSUBS, or RORGS (40 CFR 268.42) (non-waste water)
		D039,	Tetrachloroethylene	Not Established
☐	Waste Paint Related Material	F003,	Acetone	160.0 (non-waste water)
		F005,	Methyl Ethyl Ketone	36.0 (non-waste water)
		F003,	Methyl Isobutyl Ketone	33.0 (non-waste water)
		F005,	Toluene	28.0 (non-waste water)
		F003,	Xylene	28.0 (non-waste water)
		F003,	Methanol	0.75 (non-waste water)
		D001,	Ignitable Liquid (High TOC Subcategory)	INCIN, FSUBS, or RORGS (40 CFR 268.42) (non-waste water)
		D006,	Cadmium	1.0 (non-waste water)
		D007,	Chromium	5.0 (non-waste water)
		D008,	Lead (TOC Subcategory)	5.0 (non-waste water)
☐	Waste Antifreeze	D008,	Lead	5.0 (non-waste water)
		D039,	Tetrachloroethylene	Not Established

RECEIVED MAR 2 1995 DEPT OF ENV PROTECTION WEST PALM BEACH

The constituent composition is based on knowledge of the waste (via Material Safety Data Sheets for the chemical(s) used, and the process which created the waste).
* These treatment standards do not preclude reclamation prior to final disposition.

Generator Company: SAFETY KLEEN CORP 3-097-02 EPA ID NO.: FLD 984171694

Generator's Signature: X [signature] Date: 5/2/94

Printed Name and Title of Generator: JUAN FONSECA SPECIAL MARKETS MGR.

Safety-Kleen Corp. manages the above waste through its recycling and fuels programs in accordance with all applicable elements of the land disposal restrictions.

FACILITY

South Carolina Department of Health and Environmental Control

Bureau of Solid & Hazardous Waste Mgt.
2600 Bull Street, Columbia, SC 29201
Phone: (803) 734-5200
Emergency & Holidays: (803) 253-6488

Please print or type. (Form designed for use on elite (12-pitch) typewriter.)

Form Approved OMB No. 2050-0039. Expires 9-3

UNIFORM HAZARDOUS WASTE MANIFEST

1. Generator's US EPA ID No.: F L 0 9 8 4 1 7 1 6 9 4
MANIFEST DOCUMENT NO.: 4 9 9 1 0 6

2. Page 1 of

Information in the shaded areas not required by Federal law, but by State law.

3. Generator's Name and Mailing Address
Safety-Kleen Corp.
8755 Northwest 95th St.
Medley, FL 33178

4. Generator's Phone (305) 884-0123

5. Transporter 1 Company Name: SAFETY-KLEEN CORP
6. US EPA ID Number: I L 0 9 8 4 9 0 8 2 0 2

7. Transporter 2 Company Name
8. US EPA ID Number

9. Designated Facility Name and Site Address
SAFETY-KLEEN CORP
130-A FRONTAGE ROAD
LEXINGTON SC 29073
10. US EPA ID Number: S C D 0 0 7 7 9 9 5 4 8 8
0-006-30

A. State Manifest Document Number
B. State Generator's ID
C. State Transporter's ID
D. Transporter's Phone 803-359-2491
E. State Transporter's ID
F. Transporter's Phone
G. State Facility's ID
H. Facility's Phone 803-356-4061

11. US DOT Description (Including Proper Shipping Name, Hazard Class, and ID Number)	12. Containers No.	Type	13. Total Quantity	14. Unit Wt/Vol	I. Waste No.
a. RQ WASTE TETRACHLOROETHYLENE CLASS 6.1 UN1897 PG III (F002,D007,D039)	1 1	D F	1 1 5 6 0	P	F 0 0 2 / D 0 0 7
b. RQ WASTE TETRACHLOROETHYLENE CLASS 6.1 UN1897 PG III (F002,D007,D039)	1 1	D M	1 1 5 6 0	P	F 0 0 2 / D 0 0 7
c. WASTE TETRACHLOROETHYLENE 6.1 UN1897 PGIII(F002,D039)	1 1 5	D M	1 1 9 0 0	P	F 0 0 2 / D 0 3 9
d.					

RECEIVED
MAR 2 1995
DEPT OF ENV. PROTECTION
WEST PALM BEACH

J. Additional Descriptions for Materials Listed Above
a. (A) D007, D039, F002 — S K 0 0 1 0 9 — 0 0 0 3
b. (B) D007, D039, F002 — S K 0 0 1 0 9 — 0 0 0 3
c. (C) F002,D039 — S K 0 0 1 0 9 — 0 0 0 3
d.

K. Handling codes for wastes Listed Above
A: FL M020
B: FL M020
C: FL M020

15. Special Handling Instructions and Additional Information
3-097-02
EMERGENCY RESP # 1-708-888-4660 (24 HR)
SKOOT # A: 506 B: 506 C: 906

7250463D

16. GENERATOR'S CERTIFICATION: I hereby declare that the contents of this consignment are fully and accurately described above by proper shipping name and are classified, packed, mar and labeled, and are in all respects in proper condition for transport by highway according to applicable international and national government regulations and the laws of the State of South Carc
If I am a large quantity generator, I certify that I have a program in place to reduce the volume and toxicity of waste generated to the degree I have determined to be economically practicable and that I have selected the practicable method of treatment, storage, or disposal currently available to me which minimizes the present and future threat to human health and the environment; OR, if I am a small quantity generator, I have made a good faith effort to minimize my waste generation and select the best waste management method that is available to me and that I can afford.

GENERATOR

Printed/Typed Name	Signature	Date (Month Day Y)
Christopher D Ibarra	Christopher D Ibarra	0 1 9 0 1 9

TRANSPORTER

17. Transporter 1 Acknowledgement of Receipt of Materials

Printed/Typed Name	Signature	Date (Month Day Y)
Edgar E. Ritenour	Edgar E. Ritenour	0 1 9 0 1 9

18. Transporter 2 Acknowledgement or Receipt of Materials

Printed/Typed Name	Signature	Date (Month Day Y)

FACILITY

19. Discrepancy Indication Space
a. lbs. c. lbs.
b. lbs. d. lbs.

20. FACILITY Owner or Operator: Certification of receipt of hazardous materials covered by this manifest except as noted in Item 19.

Printed/Typed Name	Signature	Date (Month Day Y)
Jeff Bramble	Jeff Bramble	0 2 0 6 1 9

3-097-42

NOTICE OF LAND DISPOSAL RESTRICTION OF WASTE

TO: SAFETY-KLEEN CORP.
(DESIGNATED FACILITY)

EPA ID NO. IL0984908202
(DESIGNATED FACILITY)

ADDRESS: 130-A FRONTAGE RD LEXINGTON SC 29073

Under manifest/sales service number 49906.
the generator noted below is shipping to you a waste determined to be restricted under 40 CFR Part 268. In accordance with 40 CFR Part 268.7, the generator hereby provides notice that the waste is restricted from land disposal. A copy of this form must be kept by the generator and facility for five (5) years from the date of waste shipment.

PLEASE CHECK THE APPROPRIATE BOXES

✓	WASTE NAME	EPA * WASTE CODE	THE WASTE MAY CONTAIN THE FOLLOWING RESTRICTED CONSTITUENTS	TREATMENT STANDARD (mg/l) OR METHOD (FOR NON-WASTE WATER)
☐	Waste Petroleum Naphtha	D001, D039,	Ignitable Liquid (High TOC Subcategory) Tetrachloroethylene	INCIN, FSUBS, or RORGS (40 CFR 268.42) (non-waste water) Not Established
☐	Waste Petroleum Naphtha	D001,	Ignitable Liquid (High TOC Subcategory)	INCIN, FSUBS, or RORGS (40 CFR 268.42) (non-waste water)
☐	Waste Petroleum Naphtha	D001, D006, D039,	All of the above, plus: Cadmium Lead Tetrachloroethylene	1.0 (non-waste water) 5.0 (non-waste water) Not Established
☐	Waste Perchloroethylene	F002, D007	Tetrachloroethylene CHROMIUM	5.6 (non-waste water) 5.0 (NON-WASTE WATER)
☑	Waste Perc. Filters This hazardous debris is subject to the alternative treatment standards of 40CFR 268.45.	F002,	Tetrachloroethylene	5.6 (non-waste water)
☐	Waste Trichlorotrifluoroethane	F002,	Trichlorotrifluoroethane	28.0 (non-waste water)
☐	Waste 1,1,1 Trichloroethane	F002,	1, 1, 1 Trichloroethane	5.6 (non-waste water)
☐	Waste Petroleum Naphtha (Dry Cleaning)	D001, D039,	Ignitable Liquid (High TOC Subcategory) Tetrachloroethylene	INCIN, FSUBS, or RORGS (40 CFR 268.42) (non-waste water) Not Established
☐	Waste Paint Related Material	F003, F005, F003, F005, F003, F003, D001, D006, D007, D008,	Acetone Methyl Ethyl Ketone Methyl Isobutyl Ketone Toluene Xylene Methanol Ignitable Liquid (High TOC Subcategory) Cadmium Chromium Lead (TOC Subcategory)	160.0 (non-waste water) 36.0 (non-waste water) 33.0 (non-waste water) 28.0 (non-waste water) 28.0 (non-waste water) 0.75(non-waste water) INCIN, FSUBS, or RORGS (40 CFR 268.42) (non-waste water) 1.0 (non-waste water) 5.0 (non-waste water) 5.0 (non-waste water)
☐	Waste Antifreeze	D008, D039,	Lead Tetrachloroethylene	5.0 (non-waste water) Not Established

RECEIVED
MAR 2 1995
DEPT OF ENV PROTECTION
WEST PALM BEACH

The constituent composition is based on knowledge of the waste (via Material Safety Data Sheets for the chemical(s) used, and the process which created the waste).
*These treatment standards do not preclude reclamation prior to final disposition.

Generator Company: SAFETY KLEEN CORP

EPA ID NO.: FLD984171694

Safety-Kleen Corp. manages the above waste through its recycling and fuels programs in accordance with all applicable elements of the land disposal restrictions.

FEB 22 '95 14:02 FROM PAGE.002

RECEIVED
MAR 2 1995
DEPT OF ENV PROTECTION
WEST PALM BEACH

FLD984171694
GENERATOR, TRANSPORTER, STORAGE & TRANSFER FACILITY

In addition, DEP personnel informed SKM that during the record review twenty-four manifests were missing the corresponding LDRC. Of those which had the corresponding LDRC, several gave the EPA ID# of the transporter, ILD984908202, instead of that of the TSD in the box on the LDRC reserved for the EPA ID# of the TSD. This discrepancy in the records makes it unclear where the waste was sent. Three of the manifests for drummed waste were photocopies, SKM was unable to provide exception reports to explain how the photocopy was acquired on place of the original.

On 12/9/94 a letter from SKM was hand delivered to the DEP Southeast District Office. In this letter SKM outlines measures they took to respond to the DEP concerns that are listed above. According to the letter all necessary repairs were completed and missing equipment were replaced by 12/22/94.

In the letter SKM states that they were not required to have exception reports for photocopies of signed returned manifests if the photocopies are received by SKM within forty-five days of the shipment. DEP agrees with SKM on this point, but when DEP personnel requested documentation to verify when SKM received the photocopies none was offered.

SKM states in the letter that they are not required to maintain LDRC for transfer facility wastes. SKM provided twenty-five photocopied LDRC, of which three did not correspond to original signed manifests that were reviewed on 11/30/94, three were LDRC that had been available for review on 11/30/94, seventeen LDRC corresponded to manifests of drummed hazardous waste on which SKM is indicated as the generator at the bottom of these LDRC. The remaining two LDRC corresponded to manifests for shipments of waste mineral spirits generated at SKM from the bulk storage tank (manifests numbered 08294 and 80194). Three of the missing LDRC for drummed waste (manifests numbered 49906, 11212, and 80594), as well as two missing LDRC for waste mineral spirits generated from SKM's bulk storage tank (manifests numbered 50294 and 97646), are still unaccounted for. The Department assumes that SKM is the generator of wastes for which SKM maintains the signed original manifests on site, and the corresponding LDRC indicate SKM as the generator.

find these LDR

Hazardous and solid waste management rules have been violated, as noted below ("Summary of Violations"). The Department expects the violations to be corrected in an expeditious and safe manner. The Department's Enforcement Section is willing to provide assistance within the Department's capabilities, limitations, time constraints and workload. In addition, if not already done, the Department suggests that a copy of the hazardous waste regulations (40 CFR 260-268) be obtained from local public, college or law libraries or EPA Region IV or U.S. Government Printing Office. Please be advised that the Department does not have copies of the regulations to hand out.

South Carolina Department of Health and Environmental Control

TANKER

Bureau of Solid & Hazardous Waste Mgt.
2600 Bull Street, Columbia, SC 29201
Phone: (803) 734-5200
Emergency & Holidays: (803) 253-6488

3-097-02

Please print or type. (Form designed for use on elite (12-pitch) typewriter.)

Form Approved OMB No. 2050-0039. Expires 9-30-94

UNIFORM HAZARDOUS WASTE MANIFEST

1. Generator's US EPA ID No.: FLD984171694
MANIFEST DOCUMENT NO.: 08294
2. Page 1 of 1
Information in the shaded areas is not required by Federal law, but is by State law.

3. Generator's Name and Mailing Address
SAFETY-KLEEN CORP.
8755 NORTHWEST 95TH ST
MEDLEY, FL 33178
4. Generator's Phone (305) 884-0123

A. State Manifest Document Number
B. State Generator's ID

5. Transporter 1 Company Name: SAFETY-KLEEN CORP.
6. US EPA ID Number: ILD984908202
C. State Transporter's ID
D. Transporter's Phone 803 356-4061

7. Transporter 2 Company Name
8. US EPA ID Number
E. State Transporter's ID
F. Transporter's Phone
G. State Facility's ID

9. Designated Facility Name and Site Address
SAFETY-KLEEN CORP.
130-A FRONTAGE ROAD
LEXINGTON SC 29073
10. US EPA ID Number: 0-006-30 SCD077995488
H. Facility's Phone: 803 356-4061

11. US DOT Description (Including Proper Shipping Name, Hazard Class, and ID Number)	12. Containers No.	Type	13. Total Quantity	14. Unit Wt/Vol	I. Waste No.
GENERATOR a. RQ WASTE COMBUSTIBLE LIQUID, N.O.S. (PETROLEUM NAPHTHA) NA1993 PGIII(D001) (ERG#27) 6.7 LBS./GAL.	0001	TT	16914 (E) 7700 G		D001 D039
b.					
c.					
d.					

RECEIVED
MAR 2 1995
DEPT. OF ENV. PROTECTION
WEST PALM BEACH

J. Additional Descriptions for Materials Listed Above
D018 D035 D039 D040
a. SK-0109-0001
b.
c.
d.

K. Handling codes for wastes Listed Above

15. Special Handling Instructions and Additional Information
3-097-02 7246448O
EMERGENCY RESP# 1-708-888-4660 (24 HR)
SKDOT# A: 528 B: C: D:

16. GENERATOR'S CERTIFICATION: I hereby declare that the contents of this consignment are fully and accurately described above by proper shipping name and are classified, packed, marked and labeled, and are in all respects in proper condition for transport by highway according to applicable international and national government regulations and the laws of the State of South Carolina.

If I am a large quantity generator, I certify that I have a program in place to reduce the volume and toxicity of waste generated to the degree I have determined to be economically practicable and that I have selected the practicable method of treatment, storage, or disposal currently available to me which minimizes the present and future threat to human health and the environment; OR, if I am a small quantity generator, I have made a good faith effort to minimize my waste generation and select the best waste management method that is available to me and that I can afford.

Printed/Typed Name	Signature	Date (Month Day Year)
RICHARD VRUSILO		08 29 94

TRANSPORTER

17. Transporter 1 Acknowledgement of Receipt of Materials		Date
Printed/Typed Name: Wyman WATTS	Signature	08 29 94
18. Transporter 2 Acknowledgement or Receipt of Materials		Date
Printed/Typed Name	Signature	

FACILITY

19. Discrepancy Indication Space
a. 46324 lbs. c. lbs.
b. (E) lbs. d. lbs.
13a Corrected Volume/Weight Accepted (E)

20. FACILITY Owner or Operator: Certification of receipt of hazardous materials covered by this manifest except as noted in Item 19.

Printed/Typed Name	Signature	Date (Month Day Year)
Michael DuBose		08 29 94

LAND DISPOSAL RESTRICTIONS AND WASTE ANALYSIS CRITERIA FORM

SAFETY-KLEEN CORP. (DESIGNATED FACILITY) EPA ID NO. ILD984908202
(DESIGNATED FACILITY)

ADDRESS: 130-A FRONTAGE RD LEXINGTON SC 29073

Under manifest / sales service number 03294, the generator noted below is shipping to you a waste determined to be restricted under 40 CFR Part 268. In accordance with 40 CFR Part 268.7, the generator hereby provides notice that the waste is restricted from land disposal. A copy of this form must be kept by the generator and facility for five (5) years from the date of waste shipment.

PLEASE ✓ THE APPROPRIATE BOXES

WASTE NAME (FOR NON-WASTE WATER)	WASTE CODE	THE WASTE MAY CONTAIN THE FOLLOWING RESTRICTED CONSTITUENTS	TREATMENT STANDARD (mg/l) OR METHOD
☑ Waste Petroleum Naphtha 105	D001,	Ignitable Liquid (High TOC Subcategory)	Incineration (INCIN), fuel substitution (FSUBS) or recovery (RORGS) (40 CFR 268.42) (non-waste water)
		Halogenated Organic Compounds (HOC's) ≥ 1000 mg/l	INCIN (40 CFR 268.42)(non-waste water)
	D006,	Cadmium	1.0 (non-waste water)
	D008,	Lead	5.0 (non-waste Water
	D018,	Benzene	Not Established
	D035,	Methyl Ethyl Ketone	Not Established
	D039,	Tetrachloroethylene	Not Established
	D040,	Trichloroethylene	Not Established
☐ Waste Petroleum Naphtha 140	D001, D006, D008, D018, D039,	Ignitable Liquid (High TOC Subcategory) Cadmium Lead Benzene Tetrachloroethylene	INCIN, FSUBS, or RORGS (40 CFR 268.42)(non-waste water) 1.0 (non-waste water) 5.0 (non-waste Water Not Established Not Established
☐ Cyclonic, 150 Premium Solvent OR Actrel Solvent (If customer specific TCLP is not available)	D006, D008, D018, D039, D040,	Cadmium Lead Benzene Tetrachloroethylene Trichloroethylene	1.0 (non-waste water) 5.0 (non-waste Water Not Established Not Established Not Established
☐ Waste Petroleum Naphtha (sludges from Safety-Kleen Service Center Operations	D001, D006, D008, D018, D039,	Ignitable Liquid (High TOC Subcategory) Cadmium Lead Benzene Tetrachloroethylene	INCIN, FSUBS, or RORGS (40 CFR 268.42)(non-waste water) 1.0 (non-waste water) 5.0 (non-waste Water) Not Established Not Established
☐ Waste Compound Cleaning Liquid/ Immersion cleaner 699	D006, D008, D018, D021, D027, D035, D039, D040,	HOC's ≥ 1000 mg/l Cadmium Lead Benzene Chlorobenzene 1, 4-Dichlorobenzene Methyl Ethyl Ketone Tetrachloroethylene Trichloroethylene	INCIN (40 CFR 268.42)(non-waste water) 1.0 (non-waste water) 5.0 (non-waste Water Not Established Not Established Not Established Not Established Not Established Not Established

RECEIVED
MAR 2 1995
DEPT OF ENV PROTECTION
WEST PALM BEACH

FACILITY

MACHINE NUMBER	SPECIFIC GRAVITY	EXCESS FLUID IN DRUM? (MS>2/3)(IC>1/3)(Y/N)	OFF - COLOR? (Y/N)	MORE THAN 30% SOLIDS?(Y/N)	UNUSUAL ODOR? (Y/N)	UNUSUAL MATERIALS INCLUDED/ADDED? (Y/N)

SPECIFIC GRAVITY ACCEPTANCE GUIDELINES

The constituent composition is based on knowledge of the waste (via Material Safety Data Sheets for the chemical(s) used, and the process which created the waste). These treatment standards do not preclude reclamation prior to final disposition.

Generator Company: SAFETY-KLEEN

Safety-Kleen Corp. manages the above waste through its recycling and fuels programs in accordance with all [illegible] EPA ID NO. FLD984171694

FORM 1339

South Carolina Department of Health and Environmental Control

TANKER

Bureau of Solid & Hazardous Waste Mgt.
2600 Bull Street, Columbia, SC 29201
Phone: (803) 734-5200
Emergency & Holidays: (803) 253-6488

3-097-02

Please print or type. (Form designed for use on elite (12-pitch) typewriter.)

Form Approved OMB No. 2050-0039. Expires 9-30-94

UNIFORM HAZARDOUS WASTE MANIFEST

1. Generator's US EPA ID No.: FLD984171694
MANIFEST DOCUMENT NO.: 801194
2. Page 1 of 1
Information in the shaded areas is not required by Federal law, but is by State law.

GENERATOR

3. Generator's Name and Mailing Address
SAFETY-KLEEN CORP.
8755 NORTHWEST 95TH ST
MEDLEY, FL 33178
4. Generator's Phone (305) 884-0123

A. State Manifest Document Number
B. State Generator's ID

5. Transporter 1 Company Name: SAFETY-KLEEN CORP.
6. US EPA ID Number: ILD984908202
C. State Transporter's ID
D. Transporter's Phone 803 356-4061

7. Transporter 2 Company Name
8. US EPA ID Number
E. State Transporter's ID
F. Transporter's Phone
G. State Facility's ID

9. Designated Facility Name and Site Address
SAFETY-KLEEN CORP.
130-A FRONTAGE ROAD
LEXINGTON SC 29073
10. US EPA ID Number: SCD077995488
H. Facility's Phone: 803 356-4061

11. US DOT Description (Including Proper Shipping Name, Hazard Class, and ID Number)	12. Containers No.	Type	13. Total Quantity	14. Unit Wt/Vol	I. Waste No.
a. RQ WASTE COMBUSTIBLE LIQUID, N.O.S. (PETROLEUM NAPHTHA) NA1993 PGIII(D001) (ERG#27) 6.7 LBS./GAL.	0001	TT	6941 17100	G	D001 D039
b.					
c.					
d.					

RECEIVED
MAR 2 1995
DEPT OF ENV PROTECTION
WEST PALM BEACH

J. Additional Descriptions for Materials Listed Above
a. D018 SK 0019 0001
b.
c.
d.

K. Handling codes for wastes Listed Above

15. Special Handling Instructions and Additional information
EMERGENCY RESP# 1-708-888-4660 (24 HR) 3-097-02 71355192
SKDOT# A: 528 B: C: D:

16. **GENERATOR'S CERTIFICATION:** I hereby declare that the contents of this consignment are fully and accurately described above by proper shipping name and are classified, packed, marked, and labeled, and are in all respects in proper condition for transport by highway according to applicable international and national government regulations and the laws of the State of South Carolina.

If I am a large quantity generator, I certify that I have a program in place to reduce the volume and toxicity of waste generated to the degree I have determined to be economically practicable and that I have selected the practicable method of treatment, storage, or disposal currently available to me which minimizes the present and future threat to human health and the environment; **OR,** if I am a small quantity generator, I have made a good faith effort to minimize my waste generation and select the best waste management method that is available to me and that I can afford.

Printed/Typed Name: Christopher D Ibarra
Signature: Christopher D Ibarra
Date: Month 08 Day 25 Year 94

TRANSPORTER

17. Transporter 1 Acknowledgement of Receipt of Materials
Printed/Typed Name: WAYNE OTT
Signature: Wayne Ott
Date: Month 08 Day 25 Year 94

18. Transporter 2 Acknowledgement or Receipt of Materials
Printed/Typed Name:
Signature:
Date: Month Day Year

FACILITY

19. Discrepancy Indication Space
a. 46505 lbs. c. lbs.
b. lbs. d. lbs.
13a. Corrected Volume/Weight Accepted (T)

20. FACILITY Owner or Operator: Certification of receipt of hazardous materials covered by this manifest except as noted in Item 19.
Printed/Typed Name: JOHN JORDAN
Signature: John Jordan
Date: Month 08 Day 25 Year 94

EPA Form 8700-22 (REV. 9/88) Previous Editions are Obsolete (DHEC 1988 REV. 5/89)

LAND DISPOSAL RESTRICTIO[illegible]ND WASTE ANALYSIS CRITERIA FORM

[illegible]FETY-KLEEN CORP. (DESIGNATED FACILITY)

EPA ID NO. IL0984908202
(DESIGNATED FACILITY)

[illegible]RESS: 130-A FRONTAGE RD LEXINGTON SC 29073

[illegible]r manifest / sales service number 80194, the generator noted below is shipping to you a waste determined to [illegible] restricted under 40 CFR Part 268. In accordance with 40 CFR Part 268.7, the generator hereby provides notice that the waste is restricted from land disposal. [illegible] copy of this form must be kept by the generator and facility for five (5) years from the date of waste shipment.

PLEASE ✓ THE APPROPRIATE BOXES

WASTE NAME (FOR NON-WASTE WATER)	WASTE CODE	THE WASTE MAY CONTAIN THE FOLLOWING RESTRICTED CONSTITUENTS	TREATMENT STANDARD (mg/l) OR METHOD
☑ Waste Petroleum Naphtha 105	D001, D006, D008, D018, D035, D039, D040,	Ignitable Liquid (High TOC Subcategory) Halogenated Organic Compounds (HOC's) ≥ 1000 mg/l Cadmium Lead Benzene Methyl Ethyl Ketone Tetrachloroethylene Trichloroethylene	Incineration (INCIN), fuel substitution (FSUBS) or recovery (RORGS) (40 CFR 268.42) (non-waste water) INCIN (40 CFR 268.42)(non-waste water) 1.0 (non-waste water) 5.0 (non-waste Water Not Established Not Established Not Established Not Established
☐ Waste Petroleum Naphtha 140	D001, D006, D008, D018, D039,	Ignitable Liquid (High TOC Subcategory) Cadmium Lead Benzene Tetrachloroethylene	INCIN, FSUBS, or RORGS (40 CFR 268.42)(non-waste water) 1.0 (non-waste water) 5.0 (non-waste Water Not Established Not Established
☐ Cyclonic, 150 Premium Solvent OR Actrel Solvent (If customer specific TCLP is not available)	D006, D008, D018, D039, D040,	Cadmium Lead Benzene Tetrachloroethylene Trichloroethylene	1.0 (non-waste water) 5.0 (non-waste Water Not Established Not Established Not Established
☐ Waste Petroleum Naphtha (sludges from Safety-Kleen Service Center Operations	D001, D006, D008, D018, D039,	Ignitable Liquid (High TOC Subcategory) Cadmium Lead Benzene Tetrachloroethylene	INCIN, FSUBS, or RORGS (40 CFR 268.42)(non-waste water) 1.0 (non-waste water) 5.0 (non-waste Water) Not Established Not Established
☐ Waste Compound Cleaning Liquid/ Immersion cleaner 699	D006, D008, D018, D021, D027, D035, D039, D040,	HOC's ≥ 1000 mg/l Cadmium Lead Benzene Chlorobenzene 1, 4-Dichlorobenzene Methyl Ethyl Ketone Tetrachloroethylene Trichloroethylene	INCIN (40 CFR 268.42)(non-waste water) 1.0 (non-waste water) 5.0 (non-waste Water Not Established Not Established Not Established Not Established Not Established Not Established

RECEIVED
MAR 2 1995
DEPT OF ENV PROTECTION
WEST PALM BEACH

MACHINE NUMBER	SPECIFIC GRAVITY	EXCESS FLUID IN DRUM? (MS>2/3)(IC>1/3)(Y/N)	OFF - COLOR? (Y/N)	MORE THAN 30% SOLIDS?(Y/N)	UNUSUAL ODOR? (Y/N)	UNUSUAL MATERIALS INCLUDED/ADDED? (Y/N)

SPECIFIC GRAVITY ACCEPTANCE GUIDELINES

[illegible] constituent composition is based on knowledge of the waste (via Material Safety Data Sheets for the chemical(s) used, and the process which created the waste). [illegible]ese treatment standards do not preclude reclamation prior to final disposition.

[illegible]erator Company: SAFETY-KLEEN

[illegible]y-Kleen Corp. manages the above waste through its recycling and fuels programs in accord[illegible]

EPA ID NO.: FL0984171694

FORM 1339

South Carolina Department of Health and Environmental Control

Bureau of Solid & Hazardous Waste Mgt.
2600 Bull Street, Columbia, SC 29201
Phone: (803) 734-5200
Emergency & Holidays: (803) 253-6488

Please print or type. (Form designed for use on elite (12-pitch) typewriter.)

Form Approved OMB No. 2050-0039. Expires 9-30-94

UNIFORM HAZARDOUS WASTE MANIFEST

1. Generator's US EPA ID No.: F L D 9 8 4 1 7 1 0 9 4

MANIFEST DOCUMENT NO.: 80594

2. Page 1 of

Information in the shaded areas is not required by Federal law, but is by State law.

3. Generator's Name and Mailing Address
Safety-Kleen Corp.
8755 Northwest 95th St.
Medley, FL 33178

4. Generator's Phone (305) 884-0123

5. Transporter 1 Company Name: SAFETY-KLEEN CORP

6. US EPA ID Number: I L D 0 6 8 1 9 0 8 2 0 2

7. Transporter 2 Company Name:

8. US EPA ID Number:

9. Designated Facility Name and Site Address
SAFETY-KLEEN CORP
130-A FRONTAGE ROAD
LEXINGTON SC 29073

10. US EPA ID Number: 0-006-30 S C D 0 7 7 9 9 5 4 8 8

A. State Manifest Document Number

B. State Generator's ID

C. State Transporter's ID

D. Transporter's Phone

E. State Transporter's ID 803-359-2495

F. Transporter's Phone

G. State Facility's ID

H. Facility's Phone 803-356-4061

11. US DOT Description (Including Proper Shipping Name, Hazard Class, and ID Number)	12. Containers No.	Type	13. Total Quantity	14. Unit Wt/Vol	I. Waste No.
a. RQ WASTE TETRACHLOROETHYLENE CLASS 6.1 UN1897 PG III (F002,D007,D039)	21	DF	4095	P	F002 D007
b. RQ WASTE TETRACHLOROETHYLENE CLASS 6.1 UN1897 PG III (F002,D007,D039)	17	DM	1190	P	F002 D007
c. WASTE TETRACHLOROETHYLENE 6.1 UN1897 PGIII(F002,D039)	13	DM	780	P (cm)	F002 D039
d.					

RECEIVED
MAR 2 1995
DEPT OF ENV PROTECTION
WEST PALM BEACH

J. Additional Descriptions for Materials Listed Above.

a. (A) D007, D039, F002 SK 00109 0003
b. (B) D007, D039, F002 SK 00109 0003
c. (C) F002,D039 SK 00109 0003
d.

K. Handling codes for wastes Listed Above
A: FL M020
B: FL M020
C: FL M020

15. Special Handling Instructions and Additional information
3-097-02
EMERGENCY RESP # 1-708-888-4660 (24 HR)
SKDOT # A: 506 B: 606 C: 906

7/486567

16. **GENERATOR'S CERTIFICATION:** I hereby declare that the contents of this consignment are fully and accurately described above by proper shipping name and are classified, packed, marked, and labeled, and are in all respects in proper condition for transport by highway according to applicable international and national government regulations and the laws of the State of South Carolina.

If I am a large quantity generator, I certify that I have a program in place to reduce the volume and toxicity of waste generated to the degree I have determined to be economically practicable and that I have selected the practicable method of treatment, storage, or disposal currently available to me which minimizes the present and future threat to human health and the environment; **OR,** if I am a small quantity generator, I have made a good faith effort to minimize my waste generation and select the best waste management method that is available to me and that I can afford.

Printed/Typed Name: Chris D Ibarra
Signature: [signature]
Date: Month 08 Day 08 Year 94

17. Transporter 1 Acknowledgement of Receipt of Materials
Printed/Typed Name: Mike Talbot
Signature: [signature]
Date: Month 08 Day 08 Year 94

18. Transporter 2 Acknowledgement or Receipt of Materials
Printed/Typed Name:
Signature:
Date: Month Day Year

19. Discrepancy Indication Space
14d Added by TSDF (cm) 8/9/94

a. lbs. c. lbs.
b. lbs. d. lbs.

20. FACILITY Owner or Operator: Certification of receipt of hazardous materials covered by this manifest except as noted in Item 19.

Printed/Typed Name: [signature]
Signature: [signature]
Month 08 Day 09 Year 94

GENERATOR

TRANSPORTER

FACILITY

EPA Form 8700-22 (REV. 9/88) Previous Editions are Obsolete (DHEC 1988 REV. 5/89)

State Manifest Document Number

NOTICE OF LAND DISPOSAL RESTRICTION OF WASTE

RECEIVED

DEPT OF ENV PROTECTION
WEST PALM BEACH

RECEIVED
MAR 2 1995
DEPT OF ENV PROTECTION
WEST PALM BEACH

TY-KLEEN CORP.
(DESIGNATED FACILITY)

EPA ID NO. ILD984908202
(DESIGNATED FACILITY)

SS: 130-A FRONTAGE RD LEXINGTON SC 29073

Under manifest/sales service number 80594, the generator noted below is shipping to you a waste determined to be restricted under 40 CFR Part 268. In accordance with 40 CFR Part 268.7, the generator hereby provides notice that the waste is restricted from land disposal. A copy of this form must be kept by the generator and facility for five (5) years from the date of waste shipment.

PLEASE CHECK THE APPROPRIATE BOXES

✓	WASTE NAME	EPA * WASTE CODE	THE WASTE MAY CONTAIN THE FOLLOWING RESTRICTED CONSTITUENTS	TREATMENT STANDARD (mg/l) OR METHOD (FOR NON-WASTE WATER)
☒	Waste Perchloroethylene	F002, D007	Tetrachloroethylene CHROMIUM	5.6 (non-waste water) 5.0 (NON-WASTE WATER)
☒	Waste Perc. Filters This hazardous debris is subject to the alternative treatment standards of 40CFR 268.45.	F002,	Tetrachloroethylene	5.6 (non-waste water)
☐	Waste Trichlorotrifluoroethane	F002,	Trichlorotrifluoroethane	28.0 (non-waste water)
☐	Waste 1,1,1 Trichloroethane	F002,	1, 1, 1 Trichloroethane	5.6 (non-waste water)
☐	Waste Petroleum Naphtha (Dry Cleaning)	D001, D039,	Ignitable Liquid (High TOC Subcategory) Tetrachloroethylene	INCIN, FSUBS, or RORGS (40 CFR 268.42) (non-waste wate Not Established
☐	Waste Paint Related Material	F003, F005, F003, F005, F003, F003, D001, D005, D007, D008,	Acetone Methyl Ethyl Ketone Methyl Isobutyl Ketone Toluene Xylene Methanol Ignitable Liquid (High TOC Subcategory) Cadmium Chromium Lead (TOC Subcategory)	160.0 (non-waste water) 36.0 (non-waste water) 33.0 (non-waste water) 28.0 (non-waste water) 28.0 (non-waste water) 0.75(non-waste water) INCIN, FSUBS, or RORGS (40 CFR 268.42) (non-waste wate (2) (non-waste water) 5.0 (non-waste water)
☐	Waste Antifreeze	D008, D039,	Lead Tetrachloroethylene	5.0 (non-waste water) Not Established

The constituent composition is based on knowledge of the waste (via Material Safety Data Sheets for the chemical(s) used, and the process which created the waste).
*These treatment standards do not preclude reclamation prior to final disposition.

Generator Company: SAFETY KLEEN

EPA ID NO.: FLD984171694

South Carolina Department of Health and Environmental Control

Bureau of Solid & Hazardous Waste Mgt.
2600 Bull Street, Columbia, SC 29201
Phone: (803) 734-5200
Emergency & Holidays: (803) 253-6488

3-097-02

Please print or type. (Form designed for use on elite (12-pitch) typewriter.)

Form Approved OMB No. 2050-0039. Expires 9-30-94

UNIFORM HAZARDOUS WASTE MANIFEST

1. Generator's US EPA ID No.: FLD984171694
MANIFEST DOCUMENT NO.: 97646
2. Page 1 of 1
Information in the shaded areas is not required by Federal law, but is by State law.

3. Generator's Name and Mailing Address
SAFETY-KLEEN CORP
8755 NORTHWEST 95TH ST
MEDLEY, FL 33178
4. Generator's Phone (305) 884-0123

A. State Manifest Document Number
B. State Generator's ID

5. Transporter 1 Company Name: SAFETY-KLEEN CORP.
6. US EPA ID Number: ILD984904820
C. State Transporter's ID
D. Transporter's Phone 803 356-4061

7. Transporter 2 Company Name
8. US EPA ID Number
E. State Transporter's ID
F. Transporter's Phone
G. State Facility's ID

9. Designated Facility Name and Site Address
SAFETY-KLEEN CORP.
130-A FRONTAGE ROAD
LEXINGTON SC 29073
10. US EPA ID Number: 0-006-30 / SCD077995488
H. Facility's Phone: 803 356-4061

11. US DOT Description (Including Proper Shipping Name, Hazard Class, and ID Number)	12. Containers No.	Type	13. Total Quantity	14. Unit Wt/Vol	I. Waste No.
a. RQ WASTE COMBUSTIBLE LIQUID, N.O.S. (PETROLEUM NAPHTHA) NA1993 PGIII (D001) (ERG#27) 6.7 LBS./GAL.	0001	TT	0375 0445	G	D001 D039
b.					
c.					
d.					

RECEIVED
MAR 2 1995
DEPT OF ENV PROTECTION
WEST PALM BEACH

J. Additional Descriptions for Materials Listed Above.
D018
a. SK-001099-0001
b.
c.
d.

K. Handling codes for wastes Listed Above

15. Special Handling Instructions and Additional information
EMERGENCY RESP# 1-708-888-4660 (24 HR) 3-097-02 6751/9157
SKDOT# A: 528 B: C: D:

16. **GENERATOR'S CERTIFICATION:** I hereby declare that the contents of this consignment are fully and accurately described above by proper shipping name and are classified, packed, marked, and labeled, and are in all respects in proper condition for transport by highway according to applicable international and national government regulations and the laws of the State of South Carolina.

If I am a large quantity generator, I certify that I have a program in place to reduce the volume and toxicity of waste generated to the degree I have determined to be economically practicable and that I have selected the practicable method of treatment, storage, or disposal currently available to me which minimizes the present and future threat to human health and the environment; **OR,** if I am a small quantity generator, I have made a good faith effort to minimize my waste generation and select the best waste management method that is available to me and that I can afford.

GENERATOR

Printed/Typed Name: JORGE CARVAJAL
Signature
Date: Month 01 Day 14 Year 94

TRANSPORTER

17. Transporter 1 Acknowledgement of Receipt of Materials
Printed/Typed Name: Chuck Stillinger
Signature
Date: Month 01 Day 14 Year 94

18. Transporter 2 Acknowledgement or Receipt of Materials
Printed/Typed Name
Signature
Date: Month Day Year

FACILITY

19. Discrepancy Indication Space
a. lbs. c. lbs.
b. lbs. d. lbs.
Re-Coated Volume

20. FACILITY Owner or Operator: Certification of receipt of hazardous materials covered by this manifest except as noted in Item 19.
Printed/Typed Name: MICHAEL MEARS
Signature
Date: Month Day Year

EPA Form 8700-22 (REV. 9/88) Previous Editions are Obsolete (DHEC 1988 REV. 5/89)

NOTICE OF LAND DISPOSAL RESTRICTION OF WASTE

SAFETY-KLEEN CORP.
(DESIGNATED FACILITY)

EPA ID NO. ~~SCD077995488~~
(DESIGNATED FACILITY)

ADDRESS: 130 A Frontage Rd, Lexington, SC 29073

Under manifest number 97646, the generator noted below is shipping to you a waste determined to be restricted under 40 CFR Part 268. In accordance with 40 CFR Part 268.7, the generator hereby provides notice that the waste is restricted from land disposal. A copy of this form must be kept by the generator and facility for five (5) years from the date of waste shipment.

PLEASE CHECK THE APPROPRIATE BOXES

✓	WASTE NAME	EPA* WASTE CODE	THE WASTE MAY CONTAIN THE FOLLOWING RESTRICTED CONSTITUENTS	TREATMENT STANDARD (mg/l) OR METHOD (FOR NON-WASTE WATER)
☒	Waste Petroleum Naphtha (105)	D001, D018, D039,	Ignitable Liquid (High TOC subcategory) Halogenated Organic Compounds (HOC's) ≥ 1000 mg/l Benzene Tetrachloroethylene	Incineration (INCIN), fuel substitution (FSUBS) or recovery (RORGS) (40 CFR 268.42) (non-waste water) INCIN (40 CFR 268.42) (non-waste water) Not Established Not Established
☐	Waste Petroleum Naphtha (140)	D001,	Ignitable Liquid (High TOC Subcategory)	INCIN. FSUBS, or RORGS (40 CFR 268.42) (non-waste water)
☐	Waste Petroleum Naphtha (sludges from Safety-Kleen Service Center Operations)	D001, D006, D007, D008, D039,	All of the above, plus: __ Cadmium __ Chromium __ Lead __ Tetrachloroethylene	 1.0 (non-waste water) 5.0 (non-waste water) 5.0 (non-waste water) Not Established
☐	Waste Compound Cleaning Liquid/ Immersion cleaner 699	D006, D007, D008, D018, D021, D027. D039, D040,	HOC's ≥ 1000 mg/l __ Cadmium __ Chromium __ Lead __ Benzene __ Chlorobenzene __ 1, 4-Dichlorobenzene __ Tetrachloroethylene __ Trichloroethylene	INCIN (40 CFR 268.42) (non-waste water) 1.0 (non-waste water) 5.0 (non-waste water) 5.0 (non-waste water) Not Established Not Established Not Established Not Established Not Established
☐	Waste Perchloroethylene	F002,	Tetrachloroethylene	5.6 (non-waste water)
☐	Waste Perc. Filters This hazardous debris is subject to the alternative treatment standards of 40CFR 268.45.	F002,	Tetrachloroethylene	5.6 (non-waste water)
☐	Waste Trichlorotrifluoroethane	F002,	Trichlorotrifluoroethane	28.0 (non-waste water)
☐	Waste 1,1,1 Trichloroethane	F002,	1, 1, 1 Trichloroethane	5.6 (non-waste water)
☐	Waste Petroleum Naphtha (Dry Cleaning)	D001, D039,	Ignitable Liquid (High TOC Subcategory) Tetrachloroethylene	INCIN. FSUBS, or RORGS (40 CFR 268.42) (non-waste water) Not Established
☐	Waste Paint Related Material	F003, F005, F003, F005, F003, F003, D001, D006, D007, D008,	Acetone Methyl Ethyl Ketone Methyl Isobutyl Ketone Toluene Xylene Methanol Ignitable Liquid (High TOC Subcategory) Cadmium Chromium Lead (TOC Subcategory)	160.0 (non-waste water) 36.0 (non-waste water) 33.0 (non-waste water) 28.0 (non-waste water) 28.0 (non-waste water) 0.75 (non-waste water) INCIN. FSUBS, or RORGS (40 CFR 268.42) (non-waste water) 1.0 (non-waste water) 5.0 (non-waste water) 5.0 (non-waste water)
☐	Waste Antifreeze	D008, D039,	Lead Tetrachloroethylene	5.0 (non-waste water) Not Established

RECEIVED
MAR 2 1995
DEPT OF ENV PROTECTION
WEST PALM BEACH

The constituent composition is based on knowledge of the waste (via Material Safety Data Sheets for the chemical(s) used, and the process which created the waste).
* These treatment standards do not preclude reclamation prior to final disposition.

Generator Company: SAFETY KLEEN CORP EPA ID NO.: FLD984171694

Generator's Signature X _____ Date: _____

Printed Name and Title of Generator: JORGE CARVAJAL BR. MGR

Safety-Kleen Corp. manages the above waste through its recycling and fuels programs in accordance with all applicable elements of the land disposal restrictions.

Lexington Recycle Center
Lexington, SC

Date : 4-14-94

o #: LR- 320 C

Composite #: LR-317 C THRU LR-322 C

ervice Center : Medley

Service Center #: 3-097-91

nventory Control #: 683896

Bill of Lading : 69657

otal Gallons : 7200

Tank #: 52, 53

omponent/Test	Specification	Results	Method	Analyst
hlorinated* Solvents				
111	(0.5 % Max)	0.0476		
Perc	(0.5 % Max)	0.1546		
Total	(1.0 % Max)	0.2307	SK-9209	4-14-94
pecific Gravity*	≈ 0.77-0.80	0.78	SK-9903	4-14-94
dor	Typical	Typ	-------	JW 4-14-94
olor	132/136	LT Green	SK-9921	
lash Point	> 105° F	>105°	SK-9401	
nti-Static & reen Dye Addition	No Spec.	Added	N/A	
ppearance	Clear, no suspended matter or sediment	Clear	Visual	

ccepted By: [signature] Date: 4-14-94

ejected By: _____ Date: _____

eason for Rejection: _____

* Daily Composite Only

RECEIVED
MAR 2 1995
DEPT OF ENV PROTECTION
WEST PALM BEACH

Reviewer: [signature] Date: 4-14-94

BB-06/93

EPA Form 8700-22 (REV. 9/88) Previous Editions are Obsolete (DHEC 1988 REV. 5/89)

6-GENERATOR'S COPY

SC000038

SAFETY-KLEEN SPENT PARTS WASHING SOLVENT
Lexington Recycle Center
Lexington, SC

Date : 4-15-94

o #: LR- 348 D — Composite #: LR- D THRU LR- D

ervice Center : Medley — Service Center #: 3-097-91

nventory Control #: 683938 — Manifest Document #: 9764b

otal Gallons : 7000 (6445) — Tank #: 16, 18

omponent/Test	Specification	Results	Method	Analyst
CB*	< 2 ppm	Neg	SK-9202	pw 4-15-94
ield by Dist.*	No Spec.	—	SK-9907	—
H*	6.0-9.5	8.1	SK-9906	pw 4-15
hlorinated Solvents	(Max 1% Wt.)	0.2641	SK-9209	pw 4-15-94
dor	Typical	—	-------	—
lash Point	> 95° F	>105°	SK-9401	pw 4-15
ottoms, Sediment & Water	No Spec.	17.2%	SK-9901	pw 4-15

Comments:

Accepted By: Robbie White — Date: 4-15-94

Rejected By: — Date:

Reason for Rejection:

* Daily Composite Only
< 10 Samples

RECEIVED
MAR 2 1995
DEPT OF ENV PROTECTION
WEST PALM BEACH

Reviewer: [signature] — Date: 4-15-94

BB-06/93

2B#6288377 TRL# 14409

South Carolina Department of Health and Environmental Control

Bureau of Solid & Hazardous Waste Mgt.
2600 Bull Street, Columbia, SC 29201
Phone: (803) 734-5200
Emergency & Holidays: (803) 253-6488

3-097-02

Please print or type. (Form designed for use on elite (12-pitch) typewriter.)

Form Approved OMB No. 2050-0039. Expires 9-30-94

UNIFORM HAZARDOUS WASTE MANIFEST

1. Generator's US EPA ID No.: FLD984171694
MANIFEST DOCUMENT NO.: 11212
2. Page 1 of 1
Information in the shaded areas is not required by Federal law, but is by State law.

3. Generator's Name and Mailing Address
SAFETY-KLEEN CORP.
8755 NORTHWEST 95TH ST
MEDLEY, FL 33178

4. Generator's Phone (305) 884-0123

5. Transporter 1 Company Name: SAFETY-KLEEN CORP.
6. US EPA ID Number: ILD984908202

7. Transporter 2 Company Name: L.B. Hunt Special Commodities
8. US EPA ID Number: AAL981900851

9. Designated Facility Name and Site Address
SAFETY-KLEEN CORP.
130-A FRONTAGE ROAD
LEXINGTON SC 29073
10. US EPA ID Number: SCD077995488

A. State Manifest Document Number
B. State Generator's ID
C. State Transporter's ID
D. Transporter's Phone 803 356-4061
E. State Transporter's ID
F. Transporter's Phone
G. State Facility's ID
H. Facility's Phone 803 356-4061

11. US DOT Description (Including Proper Shipping Name, Hazard Class, and ID Number)	12. Containers No.	Type	13. Total Quantity	14. Unit Wt/Vol	I. Waste No.
a. WASTE PAINT RELATED MATERIAL 3 UN1263 PG II (F005, F003, D001) (D008, D018, D035, D039, D040) (ERG#26)	218	DM	17516	P	F005 F003
b. RQ WASTE PAINT RELATED MATERIAL 3 UN1263 PGII (F005, F003, D001, D035) (D039) (ERG#26)	117	DM	11619	P	F005 F003
c. RQ WASTE COMBUSTIBLE LIQUID, N.O.S. (PETROLEUM NAPHTHA) NA1993 PGIII (D001) (D006, D008, D018, D039) (ERG#27) 6.7LBS/GAL	115	DM	11815	P	D001 D006
d. WASTE COMPOUNDS, CLEANING LIQUID (MONOETHANOLAMINE) 8 NA1760 PGII (ERG#60) (D006, D008, D018, D021, D027, D035, D039 D040)		DM		P	D001 D006

RECEIVED
MAR 2 1995
DEPT. OF ENV. PROTECTION
WEST PALM BEACH

J. Additional Descriptions for Materials Listed Above.
D001, D008, D018
a. SK 001095 0005
D001, D035, D039
b. SK 001095 0005
D008, D018, D039
c. SK 001095 0013
D018, D021, D027
d. SK 001095 0011

K. Handling codes for wastes Listed Above

15. Special Handling Instructions and Additional information
3-097-02 13077588
EMERGENCY RESP# 1-708-888-4660 (24 HR)
ITEM I(D)CON'T-D039 D040
I(A&D)CONTD-D035, D039, D040 SKDOT# A: 523 B: 524 C: 527 D: 566

16. GENERATOR'S CERTIFICATION: I hereby declare that the contents of this consignment are fully and accurately described above by proper shipping name and are classified, packed, marked, and labeled, and are in all respects in proper condition for transport by highway according to applicable international and national government regulations and the laws of the State of South Carolina.
If I am a large quantity generator, I certify that I have a program in place to reduce the volume and toxicity of waste generated to the degree I have determined to be economically practicable and that I have selected the practicable method of treatment, storage, or disposal currently available to me which minimizes the present and future threat to human health and the environment; OR, if I am a small quantity generator, I have made a good faith effort to minimize my waste generation and select the best waste management method that is available to me and that I can afford.

Printed/Typed Name: Christopher D Ibarra
Signature: Christopher D Ibarra
Date: Month 10 Day 20 Year 94

TRANSPORTER

17. Transporter 1 Acknowledgement of Receipt of Materials
Printed/Typed Name: Bryan Hains
Signature:
Date: Month 10 Day 20 Year 94

18. Transporter 2 Acknowledgement or Receipt of Materials
Printed/Typed Name: Michael A. Conklin
Signature: Michael A. Conklin
Date: Month 10 Day 21 Year 94

FACILITY

19. Discrepancy Indication Space
LINE 11 D NOT USED
a. lbs. c. lbs.
b. lbs. d. lbs.

20. FACILITY Owner or Operator: Certification of receipt of hazardous materials covered by this manifest except as noted in Item 19.

Printed/Typed Name: Billy D. GANTT
Signature: Billy D. 25
Date: Month 10 Day 27 Year 94

SC00107

safety-kleen

LAND DISPOSAL RESTRICTION AND WASTE ANALYSIS CRITERIA FORM

TO: SAFETY-KLEEN CORP. (DESIGNATED FACILITY) EPA ID NO. ILD984908202 (DESIGNATED FACILITY)

ADDRESS: 130-A FRONTAGE RD LEXINGTON SC 29073

Under manifest / sales service number 11212, the generator noted below is shipping to you a waste determined to be restricted under 40 CFR Part 268. In accordance with 40 CFR Part 268.7, the generator hereby provides notice that the waste is restricted from land disposal. A copy of this form must be kept by the generator and facility for five (5) years from the date of waste shipment.

PLEASE ☑ THE APPROPRIATE BOXES

WASTE NAME (FOR NON-WASTE WATER)	WASTE CODE	THE WASTE MAY CONTAIN THE FOLLOWING RESTRICTED CONSTITUENTS	TREATMENT STANDARD (mg/l) OR METHOD
☐ Waste Petroleum Naphtha 105	D001,	Ignitable Liquid (High TOC Subcategory) Halogenated Organic Compounds (HOC's) ≥ 1000 mg/l	Incineration (INCIN), fuel substitution (FSUBS) or recovery (RORGS) (40 CFR 268.42) (non-waste water)
	D006,	Cadmium	INCIN (40 CFR 268.42)(non-waste water)
	D008,	Lead	1.0 (non-waste water)
	D018,	Benzene	5.0 (non-waste Water
	D035,	Methyl Ethyl Ketone	Not Established
	D039,	Tetrachloroethylene	Not Established
	D040,	Trichloroethylene	Not Established
			Not Established
☐ Waste Petroleum Naphtha 140	D001,	Ignitable Liquid (High TOC Subcategory)	INCIN, FSUBS, or RORGS (40 CFR 268.42)(non-waste water)
	D006,	Cadmium	1.0 (non-waste water)
	D008,	Lead	5.0 (non-waste Water
	D018,	Benzene	Not Established
	D039,	Tetrachloroethylene	Not Established
☐ Cyclonic, 150 Premium Solvent **OR** Actrel Solvent (If customer specific TCLP is not available)	D006,	Cadmium	1.0 (non-waste water)
	D008,	Lead	5.0 (non-waste Water
	D018,	Benzene	Not Established
	D039,	Tetrachloroethylene	Not Established
	D040,	Trichloroethylene	Not Established
☑ Waste Petroleum Naphtha (sludges from Safety-Kleen Service Center Operations	D001,	Ignitable Liquid (High TOC Subcategory)	INCIN, FSUBS, or RORGS (40 CFR 268.42)(non-waste water)
	D006,	Cadmium	1.0 (non-waste water)
	D008,	Lead	5.0 (non-waste Water)
	D018,	Benzene	Not Established
	D039,	Tetrachloroethylene	Not Established
☐ Waste Compound Cleaning Liquid/ Immersion cleaner 699	D006,	HOC's ≥ 1000 mg/l	INCIN (40 CFR 268.42)(non-waste water)
	D008,	Cadmium	1.0 (non-waste water)
	D018,	Lead	5.0 (non-waste Water
	D021,	Benzene	Not Established
	D027,	Chlorobenzene	Not Established
	D035,	1, 4-Dichlorobenzene	Not Established
	D039,	Methyl Ethyl Ketone	Not Established
	D040,	Tetrachloroethylene	Not Established
		Trichloroethylene	Not Established

RECEIVED
MAR 2 1995
DEPT OF ENV PROTECTION
WEST PALM BEACH

GENERATOR

OPTIONAL STATE INFO.

MACHINE NUMBER	SPECIFIC GRAVITY	EXCESS FLUID IN DRUM? (MS>2/3)(IC>1/3)(Y/N)	OFF - COLOR? (Y/N)	MORE THAN 30% SOLIDS?(Y/N)	UNUSUAL ODOR? (Y/N)	UNUSUAL MATERIALS INCLUDED/ADDED? (Y/N)
SPECIFIC GRAVITY ACCEPTANCE GUIDELINES						

The constituent composition is based on knowledge of the waste (via Material Safety Data Sheets for the chemical(s) used, and the process which created the waste).
*These treatment standards do not preclude reclamation prior to final disposition.

FORM 1339

Generator Company: SAFETY-KLEEN EPA ID NO.: FLD984171694

Safety-Kleen Corp. manages the above waste through its [illegible]

FLORIDA DEPARTMENT OF ENVIRONMENTAL PROTECTION
NOTICE OF MEETING

Supervisor Approval
CM Initials
2/24/95 Date

Meeting Date: 3/2/95 Time: 2:00pm to 4:00pm Place: SED

Address: 1900 South Congress Avenue, West Palm Beach

Room Location: #7

Case: Safety-Kleen/Medley

Requested by: Jon Ercole Date: 2/22/95 Phone: (305) 884-0123

Purpose: Give Information X, Get Information: X

Pre-meeting anticipated: YES, on 3/2/95 at 1:00pm.

Topics to be discussed:
Violations Observed 11/30/94
Proposed Civil Penalty
Administrative Options
Specific permit conditions

Anticipated DEP meeting participants	title	Phone #
Meeting Coordinator: Cheryl Marx	E SUP II	(407) 433-2650
D1 Cheryl Marx		
D2 Jeff Smith		
D3 Knox McKee		
D4		
D5		

Anticipated non-DEP participants	Affiliation	Title	Phone #
Meeting Coordinator: Jon Ercole	Regional Manager		(305) 884-0123
N1 Jon Ercole	Safety-Kleen		(305) 884-0123
N2			
N3			
N4			

Information needed,	Responsibility #
Penalty Matrix	D1
Short Form CO Boilerplate	D1
Case File, Sign in sheet	D1
Cost & Expenses Worksheet	D1

Additional meeting notices to:
Jeff Smith
Knox McKee

Equipment needed: None

Meeting Notice date: 2/24/95

STATE OF FLORIDA
DEPARTMENT OF ENVIRONMENTAL PROTECTION

ENFORCEMENT TELEPHONE LOG

CASE NAME: Safety-Kleen/Medley DATE: 2/22/95 TIME: 9:00am

CONTACT: Jon Ercole OF Regional Manager for Safety-Kleen CALLED

PHONE #: (305) 884-0123

****

DISCUSSION:

Mr. Ercole called to schedule the enforcement meeting. We agreed to meet at the District office on 3/2/95 at 2:00 pm. Mr. Ercole said that he had found all of the missing LDR certifications. Mr. Ercole said he would be coming alone. I asked him if he would be able to make a decision or if we would need to schedule additional meetings later with people who had more authority. Mr. Ercole said that if he was not able to make a decision himself that any follow-up could be done over the telephone.

PREPARED BY: Cheryl Mayo

FILE REVIEW

DATE: 2/17/95

TIME: 10:00 AM

NAME: T.R. Hainline, JR

COMPANY:

PHONE:

FILE NAME

Chem Waste Man.

Safety Kleen

PURPOSE OF FILE REVIEW:

for review of other storage permits for proposed storage facility in Jacksonville, FL.

ATTACH BUSINESS CARD(S) IF AVAILABLE.

T. R. HAINLINE, JR.
ATTORNEY AT LAW

ROGERS, TOWERS, BAILEY, JONES & GAY

1301 GULF LIFE DRIVE—SUITE 1500 JACKSONVILLE, FLORIDA 32207
TELEPHONE (904) 398-3911 FAX (904) 396-0663
DIRECT TELEPHONE (904) 346-5531

CHECKLIST FOR WARNING LETTER

CASE NAME & NO. Safety Kleen / Medley #

- ✓ WARNING LETTER
- ✓ INSPECTION REPORT AND/OR CHECKLIST
- ___ EXHIBIT(S):
  - NO. OF EXHIBITS ___
- ___ PENALTY CALCULATION SHEETS
- ___ APPROVAL FROM THE SECRETARY
- ___ OTHER/COMMENTS ___

ENFORCEMENT TRACKING DRAFT ___	
INITIAL	DATE
[illegible]	2/16
JCMF	2/16/05

UNITED STATES POSTAL SERVICE

Official Business

PENALTY FOR PRIVATE USE TO AVOID PAYMENT OF POSTAGE, $300

U.S. MAIL

RECEIVED

FEB 27 1995

DEPT OF ENV PROTECTION
WEST PALM BEACH

Print your name, address and ZIP Code here

• Mr. Jeffrey Smith (Manatee) •

STATE OF FLORIDA
Dept. of Environmental Protection
Southeast Florida District
P.O. Box 15425
West Palm Beach, Florida 33416

Is your RETURN ADDRESS completed on the reverse side?

SENDER:

- Complete items 1 and/or 2 for additional services.
- Complete items 3, and 4a & b.
- Print your name and address on the reverse of this form so that we can return this card to you.
- Attach this form to the front of the mailpiece, or on the back if space does not permit.
- Write "Return Receipt Requested" on the mailpiece below the article number.
- The Return Receipt will show to whom the article was delivered and the date delivered.

I also wish to receive the following services (for an extra fee):

1. ☐ Addressee's Address
2. ☐ Restricted Delivery

Consult postmaster for fee.

3. Article Addressed to:

Mr. Peter Ciocio
Jafety-Kleen/Medley
8755 NW 93rd St
Medley, FL 33178

4a. Article Number
P 893-730-762

4b. Service Type
☐ Registered ☐ Insured
☐ Certified ☐ COD
☐ Express Mail ☑ Return Receipt for Merchandise

7. Date of Delivery
2/21/95

5. Signature (Addressee)
Peter Ciocio

6. Signature (Agent)

8. Addressee's Address (Only if requested and fee is paid)

PS Form **3811**, December 1991 ☆U.S. GPO: 1993—352-714 **DOMESTIC RETURN RECEIPT**

Thank you for using Return Receipt Service.

Department of Environmental Protection

Lawton Chiles
Governor

Southeast District
P.O. Box 15425
West Palm Beach, Florida 33416

Virginia B. Wetherell
Secretary

FEB 17 1995

CERTIFIED MAIL
RETURN RECEIPT REQUESTED

WARNING LETTER #WL95-003HW13SED
FLD 984 171 694

Mr. Peter Ciocio
Safety-Kleen/Medley
8755 Northwest 95th Street
Medley, Florida 33178

Dade County
HW - Safety Kleen/Medley

RE: Safety-Kleen/Medley, 8755 Northwest 95th Street, Medley, Florida 33178.

Dear Mr. Ciocio:

A hazardous waste compliance inspection was conducted at your facility on November 30, 1994. This inspection was conducted under the authority of Section 403.091, Florida Statutes and Chapter 403, Part IV, Florida Statutes, in order to determine the compliance status of your facility with Title 40 Code of Federal Regulations (CFR) Parts 260 through 268, as adopted in Florida Administrative Code (F.A.C.) Chapter 62-730.

During the inspection possible violations of rules regarding hazardous waste management were noted. These possible violations are described in the "Summary of Violations" section of the attached inspection report.

You are advised that any activity at your facility that may be contributing to violations of the above described statutes and rules should be ceased immediately. Operation of a facility in violation of State statutes or rules may result in liability for damages and restoration, and the judicial imposition of civil penalties up to $50,000 per violation per day pursuant to Section 403.727, Florida Statutes.

You are requested to contact Ms. Cheryl Marx of this office at (407) 433-2650 Ext. 116 within 10 calendar days of receipt of this Warning Letter to arrange a meeting with Department personnel to discuss the issues raised in this Warning Letter. You may wish to consult an attorney and to have the attorney attend the meeting with the Department.

PLEASE BE ADVISED that this Warning Letter is part of an agency investigation preliminary to agency action in accordance with Section 120.57(4), Florida Statutes. The purpose of this letter is to advise you of potential violations and to set up a meeting to

discuss possible resolutions to any potential violations that may have occurred for which you may be responsible. Under the Department's agreement with the United States Environmental Protection Agency (EPA), a formal administrative complaint or "Notice of Violation" (NOV) must be issued within 120 days of the date of this Warning Letter. The issuance of the NOV may be avoided through the entry of a Consent Order or a demonstration that the listed violations did not occur. If the Department issues a NOV, and you are named as a party, you will be informed of your rights to contest any determination made by the Department in the NOV.

If after further investigation, the Department determines that the violations occurred, this matter may be resolved through entry of a Consent Order which will include a compliance schedule and an appropriate penalty. In accordance with the RCRA Civil Penalty Policy of 1990, the penalty which would be assessed in this case is $6,900.00 plus $250.00 for cost and expenses.

Sincerely,

Carl R. deAguilar 2/17/95

Carlos Rivero-deAguilar Date
Director of District Management
Southeast District

VK
CRA/VK/cm

cc: Ralph Cline, EPA Region IV
Roberto Abrahante, DERM
Knox McKee, DEP Hazardous Waste Permitting, WPB
File, Reporting Coordinator
West Palm Beach, DEP File

Department of Environmental Protection

Lawton Chiles
Governor

Southeast District
P.O. Box 15425
West Palm Beach, Florida 33416

Virginia B. Wetherell
Secretary

FEB 17 1995

HAZARDOUS WASTE INSPECTION REPORT

1. INSPECTION REPORT ___Complaint _X_Routine ___Follow-up _X_Permitting

FACILITY NAME Safety-Kleen/Medley DEP/EPA ID# FLD 984 171 694

ADDRESS 8755 Northwest 95th Street, Medley, Florida 33178

COUNTY Dade PHONE (305) 884-0123 DATE 11-30-94 TIME 9:35 am

TYPE OF FACILITY:

Generator
___ Cond. Exempt S.Q.G.
___ Small Quantity
_X_ Generator
___ Non-Handler

Storage
_X_ Container
_X_ Tank
___ Waste Pile
___ Surface Impoundment

Treatment
___ Tank
___ Land Treatment
___ Thermal
___ Chem/Phys/Bio.
___ Incinerator
___ Surface Impoundment

Transporter
_X_ Transporter
_X_ Transfer Station

Disposal
___ Landfill
___ Surface Impoundment
___ Waste Pile

2. Applicable Regulations:

___ 40 CFR 261.5 _X_ 40 CFR 262 _X_ 40 CFR 263 _X_ 40 CFR 264

___ 40 CFR 265 ___ 40 CFR 266 _X_ 40 CFR 268

3. Responsible Official: (Name & Title)

Jon Ercole - Branch Manager

4. Survey Participants & Principal Inspector:

Safety-Kleen: Jon Ercole, Peter Ciocio
DEP: Cheryl Marx, Manuel Delosantos, Knox McKee

5. Facility Latitude: 25° 51′ 34" Longitude: 80° 20′ 30"

6. Type of Ownership: FEDERAL STATE COUNTY MUNICIPAL PRIVATE

7. Permit No.:**HO 13-216311** Date Issued: **12/2/92** Expiration Date: **12/2/97**

8. Pre-arranged Inspection: ___Yes _X_No.

SAFETY-KLEEN/MEDLEY
INSPECTION REPORT

FLD984171694
GENERATOR, TRANSPORTER,
STORAGE & TRANSFER
FACILITY

BACKGROUND

On November 30, 1994, a routine hazardous waste compliance inspection was conducted at Safety-Kleen/Medley (SKM), 8755 Northwest 95th Street, Medley, Florida. The inspection was part of the Department's 1994-1995 inspection schedule. The inspection and record review were hosted by Mr. Peter Ciocio, the branch manager, and Mr. Jon Ercole, the regional manager. DEP personnel participating in the inspection included Mr. Knox McKee, Mr. Manuel Delosantos, and Ms. Cheryl Marx.

SKM sells and distributes raw solvents and collects spent solvents, used oil and oil filters, used antifreeze, and paint related materials for recycling. SKM has a hazardous waste Operating Permit (OP)(#H013-216311) to operate as a storage and transfer facility. According to Mr. Ercole, there had been no changes in operation since the last inspection conducted on December 15, 1993.

SITE INSPECTION

SKM operates with a fleet of twelve trucks. Trucks are loaded with product "105 solvent" (mineral spirits) in 5, 16, and 30-gallon containers. At the customer's facility, the product 105 solvent is exchanged for spent 105 solvent which is transported back to SKM for storage or transfer. Other wastes, which include spent perchloroethylene (F002, D007, D039, D040) and spent perchloroethylene filters (F002, D039), waste paint related material (D001, F003, F005), immersion cleaner 699 (D006, D008, D018) and used oil filters are left in their containers and placed directly into the waste storage area. SKM also handles Fluid Recovery Service (FRS) waste, which it maintains as a separate transfer facility wastestream. These wastes mainly consist of products that are not initially supplied by SKM. SKM also provides a pick up and delivery laundering service for buffing pads. The buffing pads are used by the fiberglass boat and cultured marble industries to clean wax molds. The soiled buffing pads are sent to the Safety-Kleen facility in Lexington, South Carolina, for laundering, per Mr. Ercole.

RETURN/FILL AREA

In the afternoon the service trucks return to SKM with containers of spent mineral spirits (D001). The containers are unloaded from the trucks onto the loading dock in the return/fill area, and their contents are emptied into one of two "wet dumpsters." The spent solvent in the wet dumpster passes through a screen to remove solids and debris. The liquid portion of the waste is pumped from the wet dumpster to the 20,000-gallon waste mineral spirits tank located in the tank farm adjacent to the main building. The drums are cleaned with a brush attachment inside the wet dumpster. The clean drums are reused to deliver fresh product. Product 105 solvent is pumped from a storage tank in the tank farm to the return/fill area. The mineral spirits is dispensed into the clean drums via a hand held nozzle.

The solid debris collected on the screens and sludge from the bottom of the "wet dumpster" is removed and transferred into one of three satellite accumulations drums. According to specific condition number 25b in the OP, these three drums are to be labeled as follows: "waste sludge", "glass/metal", and "rags/absorbents." Three satellite drums were observed during the inspection. One drum was labeled "rags/absorbents", one was labeled "glass/metal", and the third drum had a generic hazardous waste label. The third drum contained used paper towels.

A catch pan has been installed below the grating at each dumpster to collect spilled solvent. The catch pans are connected via tubing to "safety-can" satellite accumulation containers located on the floor beneath the loading dock. The valves connecting the tubing to the "safety-can" satellite accumulation containers are to be kept closed when waste is not being delivered to the containers. The valves were found to be closed at the time of the inspection.

Several containers, including empty 16, 30 and 55-gallon drums were observed stacked around the "wet dumpsters" in the return/fill area. In addition, an open 30-gallon drum containing approximately one inch of "Premium solvent" (flash point 150°F) was observed on the loading dock. Mr. Ciocio said that the solvent had probably been dispensed into the drum that morning by one of the drivers who used it for cleaning. There are no provisions mentioned in the OP for empty drum storage in the return/fill area. The area appeared cluttered and the DEP inspectors recommended SKM practice better housekeeping methods.

STORAGE AREA

The container storage area consists of the following three operational units:

1) The Allied Product storage area is used for the storage of subsidiary products and equipment which SKM markets along with its line of recyclable solvents. This area was inspected and there appeared to be no waste storage in this area.

2) The FRS waste area, a distinct and separate area within the storage area, is operated as a transfer facility. The wastes observed in the transfer facility the day of the inspection included:

3	(55-gallon)	drums of waste paint material (F005)
1	(55-gallon)	drum of perchloroethylene waste (F002)
12	(16-gallon)	drums perchloroethylene waste (F002)
2	(30-gallon)	drums of waste oil
1	(55-gallon)	drum labeled "non-hazardous well water", not dated

3) The following containers were observed during the inspection in the permitted hazardous waste storage area:

34 (16-gallon) drums of perchloroethylene waste (F002)
11 (10-gallon) drums of spent perchloroethylene filters (F002)
7 (30-gallon) drums of mineral spirits sludge (D001)
13 (16-gallon) drums of mineral spirits sludge (D001)
1 (5-gallon) drum of waste paint material (F005)
3 (30-gallon) drums of used oil filters

All of the hazardous waste containers in the transfer and storage facilities appeared to be properly labeled and dated. According to the accumulation start dates observed on the containers in the transfer facility, none of the hazardous waste had been stored beyond the 10 day storage period. The containers appeared to be in good condition.

The loading dock just south of the storage facility was originally designed for loading and unloading hazardous waste. Instead, the roll-up door by the transfer facility is being used for loading and unloading hazardous waste, according to Mr. Ercole. Per Mr. Ercole, the loading dock is being used mainly for the delivery of new product. The loading dock is also being used as a staging area for Premium Solvent. The product Premium Solvent is hand pumped from 55-gallon drums into 30 and 16-gallon drums for distribution to SKM's customers.

DEP observed several areas of concern in the transfer and storage areas. According to the OP, the transfer facility is to be maintained distinctly and separately within the permitted waste storage area. The painted yellow border on the floor which visibly separated both areas during previous inspections, was not visible at the time of this inspection. The chain previously used to separate the two areas was not in place and appeared to be broken. The impervious floor coating is cracking. The berm in front of the roll-up door next to the transfer facility was broken.

The safety shower in the storage facility was tested by DEP personnel and the flow would not shut off when the lever was released, indicating that it was not functioning properly. Several items of emergency response equipment listed in the spill response plan were missing, including: 1 fire extinguisher, 1 standard telephone, 3 pairs of rubber gloves, 3 pairs of rubber boots, 3 protective aprons, 3 pairs of goggles/safety glasses, and 1 hand held electric pump.

TANK FARM

The tank farm consists of a five foot high concrete containment structure which is covered by a roof. The concrete containment structure is covered with an impermeable coating to make it leak resistant. There are three 20,000 gallon steel tanks inside the containment structure. One tank is used to store spent mineral spirits (D001), and another tank is

used to store product mineral spirits. The third tank was permitted to store waste antifreeze. Per Mr. Ercole, SKM never used the tank to store waste antifreeze. SKM plans to submit a modification to the OP permitting the tank to be used for Premium Solvent storage.

According to the OP, the tanks may be filled to a maximum volume of 19,000 gallons or 95% capacity. Tank levels can be read instantaneously from a digital control panel. The panel is also part of the overfill and leak detection system. According to the read-out the day of the inspection, the volume inside the waste mineral spirits tank was 8 feet and 3/4 inches, or approximately 6,840 gallons.

The protective concrete coating was observed to be cracking on the exterior in two spots along the east side of the containment structure. A large crack was observed on the north side of the containment structure.

OUTSIDE GROUNDS

DEP inspectors observed two dumpsters east of the main building, one is used for trash and the other is used to collect cardboard which is recycled. The OP required signs were posted on exterior fences. There appeared to be no signs of industrial discharges to the ground.

RECORD REVIEW

SKM provided hazardous waste disposal manifests with corresponding land disposal restriction certifications (LDRC) dating back to the previous inspection of 12/15/93 for review. Thirty-five manifests for waste mineral spirits removed from the bulk storage tank were reviewed. According to the manifests the waste mineral spirits is sent to Safety-Kleen in Lexington, South Carolina (EPA ID# SCD077995488), for recycling. Among those manifests reviewed four were missing the corresponding LDRC. Of those which had the corresponding LDRC, five gave the EPA ID# of the transporter, ILD984908202, instead of that of the TSD in the box on the LDRC reserved for the EPA ID# of the TSD. This discrepancy in the records makes it unclear where the waste was sent. According to the manifests reviewed SKM generated 223,056 gallons of D001, D039 ignitable mineral spirits waste from the bulk storage tank since 12/15/93.

Sixty-seven manifests for drummed hazardous waste disposal were reviewed for the months of January, February, March, July, August, September, October, and November of 1994. These hazardous waste shipments included spent perchloroethylene (F002, D007, D039, D040), spent perchloroethylene filters (F002, D039), waste paint related material (D001, F003, F005), immersion cleaner (D006, D008), and mineral spirits sludge and debris removed from the "wet dumpsters" (D001). Of these manifests twenty were missing the corresponding LDRC. Of those which had the corresponding LDRC, nineteen gave the EPA ID# of the transporter, ILD984908202, instead

of that of the TSD in the box on the LDRC reserved for the EPA ID# of the TSD. This discrepancy in the records makes it unclear where the waste was sent. Some of the LDRC failed to make note of the treatment standards for the F listed wastes in the shipments. On the LDRC for the shipment that left SKM on 11/22/94 (manifest #11171) the LDRC did not list treatment standards for any of the wastes listed on the manifest, which included waste perchloroethylene, spent immersion cleaner, and waste mineral spirits sludge. According to the manifests reviewed, SKM shipped 1527 kilograms of spent perchloroethylene, 6768 kilograms of spent perchloroethylene filters, 808 kilograms spent immersion cleaner, 1799 kilograms paint related waste, and 3159 kilograms of waste mineral spirits sludge, during October of 1994.

Mr. Delosantos reviewed inspection logs dating back to 12/15/93. According to Mr. Ciocio, Chris Ibarra, one of the SKM drivers, performs the facility inspections in the late afternoon. The last inspection was conducted on the previous day. The 11/29/94 inspection log for the container storage facility indicated that all of containers were accounted for. Mr. Delosantos was unable to find any mention in the safety inspection logs to indicate SKM had made note of the malfunctioning safety shower or the missing safety equipment. Notations in the inspection logs indicated that the high level alarms on the bulk tank farm were malfunctioning on 10/6/94 and that the structural integrity of the containment structure was deficient on 9/1/94. During the inspection DEP personnel noted that the necessary repairs had not been made to date.

Mr. McKee reviewed the contingency plan, records of personnel training, financial assurances, and closure documentation. These records appeared to be in order. Mr. Ercole said that SKM was planning to update some pages in the contingency plan.

DEPARTMENT FINDINGS

SKM is a large quantity generator, a transfer facility and a permitted storage facility for hazardous waste. SKM is also a collector and transporter of used oil.

An exit interview was conducted and the various areas of concern were discussed. DEP recommended that SKM take immediate action to repair the malfunctioning safety shower and replace the missing safety equipment. DEP recommended that SKM take immediate action to repair cracks in the protective concrete coating and structure of the tank farm containment structure. DEP personnel recommended SKM practice better housekeeping methods in the return/fill area. Several areas of concern in the transfer and storage areas were discussed including the need to maintain the transfer facility distinctly and separately from the adjacent permitted waste storage area. The cracking impervious floor coating and the broken berm by the roll-up door in the transfer facility were also discussed.

In addition, DEP personnel informed SKM that during the record review twenty-four manifests were missing the corresponding LDRC. Of those which had the corresponding LDRC, several gave the EPA ID# of the transporter, ILD984908202, instead of that of the TSD in the box on the LDRC reserved for the EPA ID# of the TSD. This discrepancy in the records makes it unclear where the waste was sent. Three of the manifests for drummed waste were photocopies, SKM was unable to provide exception reports to explain how the photocopy was acquired on place of the original.

On 12/9/94 a letter from SKM was hand delivered to the DEP Southeast District Office. In this letter SKM outlines measures they took to respond to the DEP concerns that are listed above. According to the letter all necessary repairs were completed and missing equipment were replaced by 12/22/94.

In the letter SKM states that they were not required to have exception reports for photocopies of signed returned manifests if the photocopies are received by SKM within forty-five days of the shipment. DEP agrees with SKM on this point, but when DEP personnel requested documentation to verify when SKM received the photocopies none was offered.

SKM states in the letter that they are not required to maintain LDRC for transfer facility wastes. SKM provided twenty-five photocopied LDRC, of which three did not correspond to original signed manifests that were reviewed on 11/30/94, three were LDRC that had been available for review on 11/30/94, seventeen LDRC corresponded to manifests of drummed hazardous waste on which SKM is indicated as the generator at the bottom of these LDRC. The remaining two LDRC corresponded to manifests for shipments of waste mineral spirits generated at SKM from the bulk storage tank (manifests numbered 08294 and 80194). Three of the missing LDRC for drummed waste (manifests numbered 49906, 11212, and 80594), as well as two missing LDRC for waste mineral spirits generated from SKM's bulk storage tank (manifests numbered 50294 and 97646), are still unaccounted for. The Department assumes that SKM is the generator of wastes for which SKM maintains the signed original manifests on site, and the corresponding LDRC indicate SKM as the generator.

Hazardous and solid waste management rules have been violated, as noted below ("Summary of Violations"). The Department expects the violations to be corrected in an expeditious and safe manner. The Department's Enforcement Section is willing to provide assistance within the Department's capabilities, limitations, time constraints and workload. In addition, if not already done, the Department suggests that a copy of the hazardous waste regulations (40 CFR 260-268) be obtained from local public, college or law libraries or EPA Region IV or U.S. Government Printing Office. Please be advised that the Department does not have copies of the regulations to hand out.

SUMMARY OF VIOLATIONS

1) 40 CFR 268.7

Land Disposal Restriction Record Keeping

SKM failed to maintain on site twenty-four LDRC for wastes generated by SKM.

2) 40 CFR 264.15(c)
40 CFR 264.54(e)
OP Specific Condition #7(5)

General Inspection Requirements
Contingency Plan - Emergency Equipment

SKM failed to make repairs on malfunctioning safety equipment and alarms in a timely fashion. SKM failed to maintain all of the required spill control and decontamination equipment in accordance with the approved OP. SKM must notify DEP whenever the approved list of emergency equipment in the OP changes.

3) OP Specific Condition #15

Container Storage Area Maintenance

SKM failed to manage the FRS transfer waste as a segregated wastestream. The FRS transfer waste must be stored within the container storage area, but apart from the wastes which have their manifests terminated at the facility. The painted yellow border on the floor which visibly separated both areas during previous inspections, was not visible at the time of this inspection. The chain used to separate the two areas was not in place. The impervious floor coating is cracking and pealing off of the floor. The berm by the roll-up door by the transfer facility is broken.

CORRECTIVE ACTIONS

1) 40 CFR 268.7

Land Disposal Restriction Record Keeping

Henceforth, SKM shall comply with all record keeping requirements listed in 40 CFR 268.7.

2) 40 CFR 264.15(c)
40 CFR 264.54(e)
OP Specific Condition #7(5)

General Inspection Requirements
Contingency Plan - Emergency Equipment

Henceforth, SKM shall make repairs on malfunctioning safety equipment and alarms in a timely fashion. SKM shall maintain all of the required spill control and decontamination equipment in accordance with the approved OP.

3) OP Specific Condition #15

Container Storage Area Maintenance

Henceforth, SKM shall manage the FRS transfer waste as a segregated wastestream. SKM will insure that FRS transfer waste is maintained within a permanently designated, distinctly separate area.

GENERATOR CHECKLIST

Facility Name: Safety-Kleen / Medley Date: 11-30-94

Facility Representative: Peter CioCio Facility ID #: FLD984171694

SIC Codes: _____ Inspector: Cheryl MARX

40 CFR 262 Subpart A -- General Standards

1. Describe the facility's hazardous waste streams:

WASTE DESCRIPTION	EPA Waste Codes	Generation Rate	Disposal Facility and EPA ID	Correct ID?	Testing or Process Knowledge
Waste Perchloroethylene	F002 D007 D039 D040	1527 Kg/m (Oct 1994)	Safety-Kleen Lexington SCD077995488	yes	Testing
Waste Perchloroethylene Filters	F002 D039	6768 Kg/m (Oct 1994)	Safety-Kleen Lexington SCD077995488	yes	Testing
Waste Paint Related Material	F003 F005 D001	1799 Kg/m (Oct. 1994)	Safety-Kleen Lexington SCD077995488	yes	Testing
Waste Petroleum Naptha 105	D001 D006 D018 D008 D039 D035 D040	223,056 g Since Dec 1993 from Bulk Tank	Safety-Kleen Lexington SCD077995488	yes	Testing
Waste Petroleum Naptha Sludge from SKM operations	D001 D006 D018 D008 D039	3159 Kg/m (Oct 1994)	Safety-Kleen Lexington SCD077995488	yes	Testing
Waste Immersion Cleaner 699	D006 D027 D008 D035 D018 D039 D040	808 Kg/m (Oct 1994)	Safety-Kleen Lexington SCD077995488	yes	Testing

(describe discrepancies in waste identification in narrative)

2. Has the facility obtained an EPA ID number? (40 CFR 262.12) Y ✓ N ____

3. Is the facility disposing of all its hazardous wastes to facilities permitted to accept the waste? Y ✓ N ____

4. Are any hazardous wastes treated or disposed of on site? Describe in narrative. Y ____ N ✓

5. Is the facility exempt from hazardous waste permit requirements? Describe in narrative. Y ____ N ✓

Facility: Safety-Kle[redacted]/Medley
Date: 11-30-94

40 CFR 262 Subpart B -- The Manifest

1. Does the facility use the manifest for all its hazardous wastes? (262.20) yes
2. Is the facility using the correct form (EPA 8700-22; OMB #2050-0039)? yes
3. Does the facility ship by rail or water? (If so, check 262.23(c)) Y ___ N ✓
4. Is the manifest filled out properly? Y ✓ N ___

Item No.:

1.	-Generator EPA ID #	Y ✓ N ___
	-5 digit manifest document #	Y ✓ N ___
3.	-Generator name and mailing address	Y ✓ N ___
4.	-Generator phone #	Y ✓ N ___
5-8.	-Transporter names and ID #s	Y ✓ N ___
D-F.	-Transporter phone # (state requirement)	Y ✓ N ___
9.	-TSD name and mailing address	Y ✓ N ___
10.	-TSD # EPA ID #	Y ✓ N ___
H.	-TSD Phone # (state requirement)	Y ✓ N ___
11.	-DOT description of the waste, including hazard class, ID # and packaging group	Y ✓ N ___
12.	-Container # and type	Y ✓ N ___
13-14.	-Quantity of waste and units	Y ✓ N ___
I.	-EPA waste code (state requirement)	Y ✓ N ___
K.	-Handling codes (state requirement)	Y ✓ N ___
16.	-Name, handwritten signature of generator and date	Y ✓ N ___
17-18.	-Name, handwritten signature of transporter and date	Y ✓ N ___
19.	-Are any manifest discrepancies noted?	Y ✓ N ___
20.	-Name, handwritten signature of TSD and date	Y ✓ N ___

Number of manifests examined 102
Number of errors 0

Note manifest document numbers and dates of manifests with errors below:

Manifest #	Date	Destination	Error(s)

5. Have any exception reports been filed? (262.42) Y ___ N ✓
   If so, did exception reports include legible copy of manifest and cover letter? Y NA N ___
6. Are manifests retained for 3 years? Y ✓ N ___

Facility: Safety-Kleen [redacted]edley
Date: 11-30-94

40 CFR 262 Subpart C -- Pre Transport Requirements

1. Does the facility accumulate the waste on-site prior to treatment or disposal? Y ✓ N ____
   Circle applicable accumulation units:
   (Containers) (Tanks) *Drip Pads* *Containment Buildings*

2. Are containers used to ship the waste off-site? Y ✓ N ____

3. Are any containers on-site prepared for shipment? Y ✓ N ____
   If so, are the containers appropriate for the waste? (262.30) Y ✓ N ____

4. Are the correct diamond-shaped DOT hazard class container labels used? (262.31) Y ✓ N ____

5. Are containers of 110 g or less marked with the correct DOT shipping name and number? Y ✓ N ____
   Is a label with the language required under 262.32(b) used? Y ✓ N ____
   Is the generator's name, address and manifest document number on the label? Y ✓ N ____

6. Are placards available to be provided to the transporter? (262.33) Y ✓ N ____

7. Are bulk packagings used (over 400 kg solid or 118 g liquid)? Y ____ N ✓

8. Are they marked and placarded properly? Y NA N ____

9. Does the facility comply with the 90-day accumulation time limit? (262.34(a)) (Complete tank, container and/or drip pad checklists for units accumulating waste.) Y ✓ N ____

10. If not, has the facility been issued an extension by the Department? (262.34(b)) Y ____ N ✓

11. Is each container marked with the beginning date of accumulation? (262.34(a)(2)) Y ✓ N ____

12. Is each container and tank marked with the words "Hazardous Waste"? (262.34(a)(3)) Y ✓ N ____

13. Are satellite accumulation points used? Describe in narrative. Y ✓ N ____

14. Are satellite containers closed ((262.34(c)) and marked with the words "hazardous waste" or other words that describe the contents? Y ✓ N ____

15. Do satellite accumulation points hold 55 gallons of waste or less? Y ✓ N ____

16. If not, is the excess marked with the date the excess waste began accumulating? (The date must be within 3 days of the date of inspection (262.34(c)(2)) Y NA N ____

Facility: Safety-Kleen/M[redacted]y
Date: 11-30-94

40 CFR 262 Subpart C -- Accumulation Requirements

Personnel Training -- 265.16

1. Do facility personnel complete hazardous waste training? Y ✓ N
   Comments:
2. Is the trainer adequately trained in hazardous waste management procedures? Y ✓ N
3. Does the training cover safety? Y ✓ N
4. Does the training cover emergency response procedures, including equipment handling and inspection? Y ✓ N
5. Does the training cover hazardous waste identification and handling procedures? Y ✓ N
6. Does the facility maintain personnel training records? Y ✓ N
7. Does the facility maintain job titles and position descriptions for employees managing hazardous waste? Y ✓ N
8. Do the job descriptions include the requisite skills, education and experience ? Y ✓ N
9. Do the job descriptions include a list of the positions' duties? Y ✓ N
10. Are people trained within 6 months of hiring? Y ✓ N
11. Do they work unsupervised prior to training? Y ___ N ✓
12. Is training reviewed annually? Date of last training 1/31/94 Y ✓ N
13. Are records maintained for three years? Y ✓ N

265 Subpart C -- Preparedness and Prevention

1. Is there evidence of a fire, explosion or release of hazardous waste or hazardous waste constituents to the environment? (265.31) Y ___ N ✓
2. Does the facility have an internal communication or alarm system? (265.32(a)) Y ✓ N
3. Is there a telephone, alarm, 2-way radio or other device at the scene of operations immediately available and capable of summoning assistance? (265.32(b)) Y ✓ N
4. Describe fire control equipment. Is it adequate? (265.32(c)) Y ✓ N
5. Is spill control and decontamination equipment present? (265.32(c)) Y ✓ N

Facility:_____
Date:_____

6. If sprinklers, water hoses or foam producing equipment is part of the facility fire control equipment, is water available at adequate volume and pressure? (265.32(d)) Y ✓ N_____

7. Is the emergency equipment inspected and tested periodically? Y ✓ N_____
Frequency? Weekly

8. Is there adequate aisle space to allow unobstructed movement of facility personnel and emergency equipment to any area of the facility where needed? (265.35) Y ✓ N_____

9. Has the facility made emergency response arrangements with the following: (265.37)

Fire Department: Metro Dade Fire Dept. Y ✓ N_____
Police: Medley Police Dept. Y ✓ N_____
Hospital: Palmetto General Hospital Y ✓ N_____
Emergency Response Contractor: OHM Y ✓ N_____

10. If not, has the facility attempted to do so and is the refusal documented? Y NA N_____

265 Subpart C -- Contingency Plans and Emergency Response

1. Does the facility have a contingency plan? 265.51) Y ✓ N_____

2. Is it at the facility and easily available? (265.53) Y ✓ N_____

3. Does the plan include:

Fire Response Procedure:	N/A_____	Y ✓ N_____
Spill Response Procedures:	N/A_____	Y ✓ N_____
Explosion Response Procedures:	N/A ✓	Y_____ N_____
A description of arrangements with local authorities:	N/A_____	Y ✓ N_____
Emergency Coordinators: (Name) Peter Ciocio		Y ✓ N_____
Addresses and telephone numbers of Emergency Coordinators:		Y ✓ N_____
Emergency equipment list:		Y ✓ N_____
Specifications and capabilities of emergency equipment:		Y ✓ N_____
Locations of emergency equipment:		Y ✓ N_____
An evacuation plan and routes:		Y ✓ N_____
Evacuation/alarm signals:		Y ✓ N_____

4. Is the plan up to date, with no changes to the list of emergency equipment, list of emergency coordinators,applicable regulations or contingency plan failures since the last revision? Y ✓ N_____

5. Has the plan been distributed to the local police, fire department, ERT and hospital? Circle omitted authorities. (265.53) Y ✓ N_____

6. Is the emergency coordinator authorized to commit funds for incident response? Y ✓ N_____

Facility: Safety-Kleen Medley
Date: 11-30-94

40 CFR 262 Subpart D -- Record keeping and Reporting

1. Is the generator keeping the following records:

Biennial Reports (262.41)	N/A____	Y ✓	N____
Exception reports (262.42)	N/A____	Y____	N ✓
Test Results:	N/A____	Y ✓	N____

2. Where are records kept? Office

3. Who is in charge of keeping records? Name Peter Ciocio
   Title Branch Manager

4. Any additional reporting, such as contingency plan implementation reports? (262.43) N/A ✓ Y____ N____

5. Are records kept for a minimum of 3 years? Y ✓ N____

40 CFR 262 Subpart E -- Exports N/A ✓

1. Has the facility exported any hazardous waste? Y____ N____
2. Has the exporter notified EPA 60 days prior to the initial shipment? Y____ N____
3. Has the receiving country consented to receive the waste? Y____ N____
4. Has a copy of the EPA Acknowledgment of Consent accompanied the shipment? Y____ N____
5. Did the shipment conform, and was the manifest completed as required by 40 CFR 262.54? Y____ N____
6. Has the exporter received confirmation of delivered shipment? Y____ N____
7. Has the exporter submitted an annual report to EPA? Y____ N____
8. Are all records kept a minimum of three years? (262.57) Y____ N____

40 CFR 262 Subpart F -- Imports N/A ✓

1. Has the facility imported any hazardous waste? Y____ N____
2. Has the manifest been completed per 262.60(b)? Y____ N____

Date 11-30 94
Inspector Cheryl MARX
Facility ID# FLD984171694

CONTAINERS STORAGE CHECKLIST FOR GENERATORS

(40 CFR Part 265, Subpart I - Use and Management of Containers)

1. Are the containers in good condition (265.171)? (Check for leaks, corrosion, bulges, etc.) ✓ Yes ___ No

2. If a container is found to be leaking, does the operator transfer the hazardous waste from the leaking container? ✓ Yes ___ No

3. Is the waste compatible with the containers and/or its liner (265.172)? ✓ Yes ___ No

4. Are the containers kept closed except when adding or removing wastes (265.173(a))? ✓ Yes ___ No

5. Are containers holding hazardous waste opened, handled or stored in such a manner as to cause the container to rupture or leak (265.173(b))? ___ Yes ✓ No

   If yes, explain using narrative.

6. Are each of the containers inspected at least weekly (265.174)? ✓ Yes ___ No

   If no, explain using narrative concerning the frequency of inspection.

7. Are containers holding ignitable or reactive wastes located at least 15 meters (50 feet) from the facility property line (265.176)? ___ N/A ✓ Yes ___ No

   If no, explain using narrative and document with photograph.

8. Are incompatible wastes stored in the same containers? ___ Yes ✓ No

   If yes, explain using narrative.

9. Are containers holding incompatible wastes kept apart by physical barrier or sufficient distance (265.177)? ✓ Yes ___ No

   If no, explain using narrative.

Rev 1-92

Date 11/30/94
Inspector Cheryl Marx
Generator EPA ID# FLD 984 171 694

Tank Systems Checklist for Generators
(40 CFR Part 265, Subpart J - Tank Systems)

NOTE: If multiple tanks exist, list each tank and specify compliance or noncompliance on the facility's site plan. Indicate on site diagram which tanks are not in compliance.

1. Are tanks presently used to accumulate waste? X Yes ___ No

2. Are there any exempt tank systems present (Closed-loop Recycling System - 261.4(a)(8))? ___ Yes X No

3. Assessment of existing tank systems integrity (265.191):

   a. Number of existing tank systems without secondary containment (265.193) in operation, or for which installation commenced on or prior to July 14, 1986? 0

   b. Number of existing tank systems without secondary containment (265.193) in operation, or for which installation commenced on or prior to the date the contained waste became hazardous (after 7/14/86)? 0

   c. Are assessments on file for each of these tank systems (a & b)? NA Yes ___ No

   If yes, do the following apply?

   (1) Assessment conducted by 1/12/88? NA Yes ___ No

   (2) For wastes becoming hazardous after 7/14/86, was an assessment on the tank containing such waste conducted within 1 year after the date the waste became hazardous? NA Yes ___ No

   (3) Certification(s) by independent, qualified, and registered P.E.(s)? NA Yes ___ No

   (4) Integrity assessment(s) results?

   ___ not leaking?
   ___ unfit for use? (See item #8)

Comments:

4. New tank systems or components (265.192):

   a. Number of new tank systems or components installed or put into use after 7/14/86?

Date 11/30/94
Generator EPA ID# FLD 984 171 694

b. Are assessments on file for each of the new tank systems or components? X Yes ___No

If yes do the following apply:

(1) Assessment(s) certified by an independent, qualified, registered P.E.? X Yes ___No

(2) Assessments(s) include the following information:

- Design standards (including secondary containment unless a variance-265.193(g)-has been received)? X Yes ___No

- Factors affecting corrosion potential of tanks or components in which the external shell or any external metal component is in contact with soil or water (determined by a corrosion expert)? X Yes ___No

- The type and degree of external corrosion protection that is needed to ensure the integrity of the tank system(s) or components(s) described above (determined by a corrosion expert)? X Yes ___No

- A determination of design or operational measures that will protect underground tank system components against potential damage from vehicular traffic? NA Yes ___No

- Design considerations to ensure that tank foundations will maintain the load of a full tank? X Yes ___No

- Tank systems will be anchored to prevent flotation or dislodgment where it is placed in a saturated zone or is located within a seismic fault zone? X Yes ___No

- Tank systems will withstand effects of frost heave? NA Yes ___No

c. Are certification statements by a qualified installation inspector or qualified registered professional engineer on file to attest:

(1) to proper tank system or component installation, tank system tightness, and that necessary repairs were performed if needed? X Yes ___No

(2) That backfill, used for underground tank systems or components, was made up of noncorrosive, porous and homogeneous materials that were placed properly around the system or component to ensure proper support? NA Yes ___No

(3) That ancillary equipment has been supported and protected against physical damage and excessive stress due to settlement, vibration, expansion or contraction? X Yes ___ No

(4) That the type and degree of corrosion protection necessary was provided, based on the certified design assessment of the system? X Yes ___ No

(5) That an independent corrosion expert ensured the proper installation of a corrosion protection system if it was field-fabricated? X Yes ___ No

d. Has secondary containment been provided as required in 265.193 (see Item #6)? X Yes ___ No

(1) Has a variance (265.193(g)) been obtained from secondary containment? NA Yes ___ No

Comments:

5. Containment and detection of releases (265.193).

NOTE: Tank Systems storing hazardous waste which contains no free liquids and that are located within buildings with impermeable floors are exempt from these requirements (265.190(a)).

a. How old are the existing tank systems? 3 YEARS
(1) If not known, what is the age of the facility? _____

b. How many existing systems are being used to store or treat dioxin containing wastes: F020, F021, F022, F023, F026, and F027? 0

c. Are there any existing tank systems which are used to store or treat materials which became hazardous wastes after 1/12/87? ___ Yes X No

(1) How many? 0

d. Use the guidelines in 265.193(a)(1)-(5) to determine when secondary containment meeting the requirement of 265.193 is to be provided (use narrative explanation sheet if necessary).

e. Have any variances (265.193(g)) from secondary containment been requested for existing tank systems? ___ Yes X No

f. Are leak tests meeting the requirements of 265.191(b)(5) conducted annually for non-enterable underground tanks without secondary containment? NA Yes ___ No

Date 11/30/94
Generator EPA ID# FLD 984 171 694

g. Are leak tests as described above, or internal inspections or other tank integrity examinations done by an independent, qualified, registered P.E. annually for all other types of tanks systems and ancillary equipment? NA Yes No

h. Are records of the results of leak tests or other tank integrity assessments kept on file? X Yes No

i. Were any tank systems or components found to be leaking or unfit for use as a result of leak tests or other assessments? Yes X No

Comments:

6. Secondary containment systems (265.193(b)-(f)).

a. Has secondary containment been provided for any tank system or component (see Items 4.d., 5.d., and 9.f.)? X Yes No

b. If yes, has the containment system been:

(1) Designed, installed and operated to prevent any migration of wastes or accumulated liquid out of the system to the soil, ground water, or surface water at any time during its use? X Yes No

(2) Capable of detecting and collecting releases and accumulated liquids until the collected material is removed? X Yes No

c. To satisfy b., has the containment system been:

(1) Constructed of or lined with materials that are compatible with the waste(s) to be contained? X Yes No

(2) Provided with sufficient strength and thickness to prevent failure due to pressure gradients, physical contact with waste it is exposed to, climatic conditions, the stress of installation, and the stress of daily operations including vehicular traffic? X Yes No

(3) Placed on a foundation or base capable of providing support to the system, resistance to pressure gradients above and below, and protection against failure due to settlement, compression or uplift? X Yes No

(4) Provided with a leak detection system that is designed and operated so that it will detect the failure of either the primary and secondary containment structure or any release of waste or accumulated liquid into the secondary containment system within 24 hours or at the earliest practicable time based on existing leak detection technology and site conditions? X Yes ___No

(5) Sloped or otherwise designed or operated to drain or remove liquids resulting from leaks, spills, or precipitation? X Yes ___No

d. Which device below is used to provide secondary containment for tanks? (Check those that apply)

X (1) A liner (external to the tank).
___(2) A vault.
___(3) A double-walled tank.
___(4) An equivalent device approved by the Department.

e. If an external liner system is used, has it been:

(1) Designed or operated to contain 100% of the capacity of the largest tank within its boundary? X Yes ___No

(2) Designed or operated to prevent run-on or infiltration of precipitation into the system? X Yes ___No

(3) Determined to be free of cracks and gaps? *___Yes X No

(4) Designed and installed to completely surround the tank and to cover all surrounding earth to prevent lateral and vertical migration of waste? X Yes ___No

* Cracks were observed in the containment wall during the inspection, according to SKM these cracks were repaired on 12/21/94.

f. If a vault system is used, has it been:

(1) Designed or operated to contain 100% of the capacity of the largest tank within its boundary? NA Yes __No
(2) Designed or operated to prevent run-on or infiltration of precipitation into the system (see note above)? NA Yes ___No
(3) Constructed with chemical-resistant water stops in place at all joints (if any)? NA Yes ___No
(4) Provided with an impermeable interior coating or lining that is compatible with the accumulated waste to prevent migration into the concrete? NA Yes ___No

(5) Provided with protection against the formation and ignition of vapors within the vault if the wastes being accumulated are ignitable or reactive? NA Yes___No

(6) Provided with an exterior moisture barrier or otherwise designed or operated to prevent migration of moisture into the vault (if it is subject to hydraulic pressure)? NA Yes___No

g. If double-walled tanks are used, are they?

(1) Designed as an integral structure so that the outer shell will contain releases from the inner tank? NA Yes___No

(2) Protected, if constructed of metal, from corrosion on the inner tank interior and outer shell exterior? NA Yes___No

(3) Provided with a built-in, continuous leak detection system capable of detecting a release within 24 hours or at the earliest practicable time based on existing technology and site conditions? NA Yes___No

7. General operating requirements (265.194).

a. Is there any evidence of ruptures, leaks, corrosion, or failure in the tank system or ancillary equipment? ___Yes X No

NOTE: If the answer is yes, explain in the narrative report.

b. Are appropriate controls and practices such as the following used to prevent spills and overflows from tanks or secondary containment systems:

(1) Spill prevention controls (e.g. check valves, dry discount couplings, etc.)? X Yes___No

(2) Overfill prevention controls (e.g. level sensing devices, high level alarms, automatic feed cutoff, or bypass to a standby tank)? X Yes___No

(3) Maintenance of sufficient freeboard in uncovered tanks to prevent overtopping by wave, wind action, or precipitation? NA Yes___No

c. Have any leaks or spills occurred in a tank system or its ancillary equipment? ___Yes X No

Date 11/30/94
Generator EPA ID# FLD 984 171 694

8. Inspections (265.195).

a. Does the owner/operator inspect the following, each operating day, where present:

(1) Overfill/spill control equipment (e.g. waste-feed cutoff systems, bypass systems, and drainage systems)? *_X_Yes___No

(2) Aboveground portions of the tank system to detect corrosion or releases of waste? _X_Yes___No

(3) Data gathered from monitoring equipment and leak detection equipment (e.g. pressure and temperature gauges, monitoring wells)? _X_Yes___No

(4) The construction materials and the area immediately surrounding the externally accessible portion of the tank system including secondary containment structures (e.g. dikes) to detect erosion or signs of releases of hazardous waste (e.g. wet spots, dead vegetation)? _X_Yes___No

b. Are cathodic protection systems, if present, inspected according to the following schedule:

(1) Six months to confirm the proper operation of the cathodic protection system after the initial installation, and annually thereafter? NA Yes___No

(2) Every other month to inspect sources of impressed current? NA Yes___No

c. Are the inspection results documented in the operating record of the facility? NA Yes___No

* The high level alarms were malfunctioning, this problem was first noted in the inspection log 10/6/94.

9. Response to leaks or spills and disposition of leaking or unfit-for-use tank systems (265.196).

a. If a tank or secondary containment system has a leak or a spill has occurred, was the system immediately removed from service and the flow of hazardous waste into the system immediately stopped? NA Yes___No

(1) If the release was from the tank system, was as much of the waste as necessary removed within 24 hours or at the earliest practicable time after its detection to allow inspection and repair to be performed? NA Yes___No

Date 11/30/94
Generator EPA ID# FLD 984 171 694

(2) If the release was to the secondary containment system, were all released materials removed within 24 hours or in as timely a manner as possible to prevent harm to human health and the environment? NA Yes No

If there was a visible release to the environment, was a visual inspection conducted by the owner/operator? NA Yes No

(1) Was further migration of the leak or spill to soils or surface water prevented? NA Yes No

(2) Was the visible contamination removed and properly disposed of? NA Yes No

c. Was the release to the environment reported to the Department within 24 hours of detection? NA Yes No

d. Was a report to the Department, as specified in 265.196(d)(3), submitted within 30 days for non-exempt releases? NA Yes No

e. If a leak was the cause of a release, was the system repaired before being returned to service? NA Yes No

f. If the leak caused a release to the environment from a component of a tank system without secondary containment, was that component provided with secondary containment as specified in 265.193 before it was returned to service (see Item #6)? NA Yes No

NOTE: If the leaking component is aboveground and can be inspected visually, secondary containment does not need to be provided after repair.

If a component was replaced in order to repair the system, the owner or operator must comply with the standards for new tank system or components 265.192 & 265.193 (see item #4).

g. Was a major repair performed to return the tank system back to service? Yes X No

(1) If yes, was a certification of this major repair done by an independent, qualified, registered P.E. before the system was returned to service? NA Yes No

(2) Was this certification submitted to the department within 7 days after returning the system to service? NA Yes No

Date 11/30/94
Generator EPA ID# FLD 984 171 694

10. Closure and post-closure care (265.197).

a. At closure of a tank system, did the owner/operator remove or decontaminate all waste residues, contaminated containment system components, contaminated soils, and structures and equipment contaminated with waste, and manage them as hazardous waste? NA Yes ___ No

11. Special requirements for ignitable or reactive wastes (265.198).

a. Are ignitable or reactive wastes placed in tanks: X Yes ___ No

(1) If yes, are they treated, rendered, or mixed before or immediately after placement in the tank system so that: ___ Yes X No

- The resulting waste, mixture, or dissolved material no longer meet the definition of ignitable or reactive waste and 265.17(b) is complied with? NA Yes ___ No

OR

- The waste is stored or treated in such a way that is protected from any material or conditions that may cause the waste to ignite or react? NA Yes ___ No

OR

- The tank system is used solely for emergencies? NA Yes ___ No

b. Are protective distances maintained between the tank accumulation areas and any public ways, streets, alley, or adjoining property lines that can be built upon as required in Tables 2-1 through 2-6 of the National Fire Protection Association's "Flammable and Combustible Liquids Code?" X Yes ___ No

Comments:

12. Special requirements for incompatible wastes (265.199).

a. Is there evidence that incompatible wastes were in the same tank? ___ Yes X No

b. If a waste is to be placed in a tank that previously held an incompatible waste or material, was that tank washed? NA Yes ___ No

Date 11/30/94
Inspector CHERYL MARX
Facility ID# FLD 984 171 694

RCRA COMPLIANCE INSPECTION REPORT
TSD FACILITIES CHECKLIST

General Facility Standards

1. Site Name SAFETY-KLEEN / MEDLEY

2. Has facility received hazardous waste from a foreign source? (264.12 - required notices) ___Yes X No

   If yes, has he filed a notice with the Regional Administrator and DER? ___Yes ___No

3. Does the facility have a copy of the permit along with the approved application? X Yes ___No

Waste Analysis (264.13) 264___ Permit Condition____

1. Is a copy of the waste analysis plan maintained at the facility? X Yes ___No

2. Does the facility have copies of completed waste analysis reports? X Yes ___No

3. Has the waste analysis been reviewed or repeated as required? X Yes ___No

4. (For off-site facilities) waste analysis that generators have agreed to supply? ___Yes ___No

5. Check waste analysis equipment to see if it is on-site and in working condition? ___Yes ___No

Security (264.14) 264___ Permit Condition___

1. Is the facility security system adequate to minimize unauthorized entry? X Yes ___No

2. Are signs posted and legible for 25 feet? X Yes ___No

Inspection Requirement (264.15) 264___ Permit Condition___

1. Does the facility have a copy of the Inspection Plan? X Yes ___No

DATE 11/30/94
FACILITY ID FLD 984 171 694

2. Does the facility have completed inspection logs? X Yes ___ No

** 3. Were the deficiencies corrected in a timely manner? ___ Yes X No

① STRUCTURAL INTEGRITY OF TANK FARM SECONDARY CONTAINMENT AREA REPORTED DEFICIENT 9/1/94 AND TO DATE, 11/30/94 IT REMAINS UNATTENDED.

4. Are the inspection logs maintained at the facility for 3 years? X Yes ___ No

5. Is the facility equipped to prevent fire, explosion or contamination of the environment and is the equipment in working condition? X Yes ___ No

② 10/6/94 HIGH LEVEL ALARMS MALFUNCTIONING AND HAVE NOT BEEN FIXED TO DATE, 11/30/94

Personnel Training (264.16) 264___ Permit Condition___

1. Does facility have copy of training plan? X Yes ___ No

2. Does facility have personnel training records? X Yes ___ No

3. Has management completed training? X Yes ___ No

4. Have laborers completed training? X Yes ___ No

5. Is training successfully completed within 6 months of hiring/transfer to HW position? X Yes ___ No

6. Has the training been conducted as stated in the Training Plan? X Yes ___ No

7. Do the facility personnel training records include:

   a. Job title and description of position? X Yes ___ No

   b. Description of employee's training? X Yes ___ No

8. Are records maintained for 3 years? X Yes ___ No

Ignitable, Reactive, or Incompatible Waste (264.17) 264___ Permit Condition___

1. Is the waste separated and confined from sources of ignition or reaction, sparks, spontaneous ignition, and radiant heat? X Yes ___ No

2. Are "No Smoking" signs posted in the area? X Yes ___ No

DATE 11/30/94
FACILITY ID FLD 984 171 694

Preparedness and Prevention (264.30-.37) 264___ Permit Condition___

1. Is there evidence of fire, explosion or contamination of the environment? ___Yes X No

2. Is the facility equipment located in accordance with the approved plan and is it functional? ___Yes X No NEED TO MAINTAIN MORE CLOSELY GLOVES, APRONS, EMERGENCY SHOWER MALFUNCTIONABLE

Contingency Plan and Emergency Procedures (264.50-56) 264___ Permit Condition___

1. Does the facility have a copy of the Contingency Plan? X Yes ___No

2. Has the plan been amended and have the amendments been approved? ___Yes X No NOT AMENDED

3. Were the plan revisions submitted to all authorities? ___Yes ___No X N/A

4. Is the emergency coordinator on-site or within short driving distance of plant at all times? X Yes ___No

5. Verify equipment location. Is it in working condition? X Yes ___No

Manifest System, Recordkeeping and Report (264.70-77) 264___ Permit Condition___

1. Does the facility have copies of the Manifest? ✓ Yes ___No

   a. Are the manifests signed and dated and returned to the generator? ✓ Yes ___No

   b. Is a signed copy given to the transporter? ___Yes ___No

   c. Are there any manifests that have not been completely filled out? ___Yes ___No

2. Are copies of the manifest retained for three years? ✓ Yes ___No

3. Has the facility received any shipments of hazardous waste which were inconsistent with the manifest? ___Yes ___No

DATE 11/30/94
FACILITY ID FLD 984 171 694

a. If yes, has he attempted to reconcile the discrepancy with the generator and transporter? ___Yes ___No

b. If no, has DER been notified? ___Yes ___No

4. Does the facility have operating records that show a description and quantity of each hazardous waste and the date and method of T,S,D at the facility? ___Yes ___No

5. Does location and quantity of hazardous waste agree with operating record? ___Yes ___No

Groundwater Monitoring (264.90-.100) 264___ Permit Condition___

1. Does the facility have a copy of the Groundwater Plan? X Yes ___No THIS IS A COUNTY REQUIREMENT AND NOT AN OPERATING PERMIT CONDITION.

2. Does the facility have copies of the groundwater analysis? X Yes ___No

3. Has the analysis been conducted as specified? ___Yes ___No X NA

4. Has there been a statistically significant increase of the value for the parameter from background? ___Yes ___No NA

5. Did the facility notify the Department of the parameter that showed a statistically significant increase within 7 days? ___Yes ___No NA

6. Verify location of wells? ___Yes ___No NA

7. Verify condition of wells and check for caps and locks? ___Yes ___No NA

Closure and Post-Closure (264.110-.120) 264___ Permit Condition____

1. Is a copy of the approved plan and all revisions kept at the facility? X Yes ___No

2. Does the maximum inventory of wastes at the facility exceed that specified in the Closure Plan? ___Yes X No

3. Does the facility have an approved post-closure plan (for land disposal facilities)? ___Yes ___No N/A

DATE 11/30/94
FACILITY ID FLD 984 171 699

4. Has the plan been amended and approved by the Department and distributed to the appropriate agencies? ___Yes ___No NA

Financial (264.140-.151) 264___ Permit Condition___

1. Does the facility have a written estimate, in current dollars, of the cost of closing the facility? X Yes ___No SUBMITTED 3/29/94 TO VIRGINIA WETHERELL, SECRETARY, FDEP BY MICHELLE R. WAUPER, SAFETY-KLEEN.

2. Has the financial assurance been updated for the last year? X Yes ___No

3. Is the facility in compliance with the financial assurance regulation with respect to:

Closure cost?		X Yes	___No
Post-closure cost?	___N/A	X Yes	___No
Sudden liability?		X Yes	___No
Non-sudden liability?	___N/A	X Yes	___No

Date 11/30/94
Inspector CHERYL MARX
Facility ID# FLD 984 171 694

TSD CONTAINERS CHECKLIST (264.170-264.178)
264___ Permit Condition___

1. Are the containers in good condition (264.171)? X Yes ___No

2. Are the containers managed in accordance with the permit (264.171)? ~~X~~ Yes X No "TSD AND FRS" TRANSFER WASTES ARE NOT KEPT DISTINCTLY SEPARATE AS REQUIRED.

3. Is the number of containers equal to or below the max inventory for the permit? X Yes ___No

4. Are the containers in the designated bays by waste type? ___Yes ___No NA

5. Is the waste stored in the specified container? X Yes ___No

6. Are containers holding hazardous waste opened, handled or stored in such a manner as to cause the container to rupture or leak (264.173(b))? ___Yes X No

Explain.

7. Are each of the containers inspected at least weekly (264.174)? X Yes ___No DAILY INSPECTION

8. Is the secondary containment system functional and are free liquids removed and managed in accordance with the permit? X Yes ~~X~~ No THE FLOOR COATING REQUIRES MAINTENANCE IN SOME AREAS WHERE THE COATING HAS PEELED OFF OF THE FLOOR.

9. Are containers holding ignitable or reactive wastes located at least 15 meters (50 feet) from the facility property line? X Yes ___No

10. Is there sufficient aisle space to allow unobstructed movement and inspection? X Yes ___No

11. Specific Condition on Permit:

TRANSFER WASTES ARE TO BE MAINTAINED ___Yes ___No
IN AN AREA DISTINCT AND SEPARATE FROM ___Yes ___No
TSDS WASTES STORED WITHIN THE ___Yes ___No
CONTAINER STORAGE AREA. (PERMIT MOD. TO INCLUDE "FRS" WASTES AS FACILITY WASTESTREAM AND MANAGE AS TRANSFER WASTES, LESS THAN TEN DAY STORAGE.

RCRA INSPECTION REPORT
PERMIT SPECIFIC CONDITIONS CHECKLIST
Safety-Kleen Medley **Permit # HO 13-216311**

Facility ID#: FLD 984 171 694 Date of Inspection: November 30, 1994

1. Has the permittee notified the Department in writing four weeks prior to the receipt of hazardous waste from a foreign source? NA

2. Are the wastes stored on site only those listed in Exhibit 6 of the Operating Permit Application? YES

3. Do the security measures to control facility access match those described in Exhibit 11 of the Application? YES

4. Does the permittee inspect all operating, emergency, and safety equipment in accordance with the schedule in Exhibit 14 of the Application? YES

5. Have personnel successfully completed the training program indicated in Exhibit 15 of the Application? YES

   a. Are training records kept on site? YES

6. Has the permittee followed the emergency procedures specified in the contingency plan that is listed in Exhibit 12 in case of imminent or actual hazardous waste emergency? NA

   a. Was DEP given proper notification (full report by 15 days)? NA

7. Have there been changes in the contingency plan? YES

   a. If so, were amended copies sent to the appropriate agencies? NO

8. Has the permittee complied with all manifest requirements indicated in 40 CFR 264.71? YES

9. Has permittee complied with financial requirements 40 CFR 264 (H)? YES

10. Does the written Operating Record Include:

    a. Description and quantity of each hazardous waste received? YES
    b. The location and quantity at location of each hazardous waste? YES
    c. The results of the waste analyses? YES
    d. A summary report of incidents that required implementation of the contingency plan? YES
    e. Manifest Records? YES
    f. Notices to off site generators (if applicable)? YES
    g. The results of inspections (for 3 years)? YES
    h. Closure plan and cost estimates? YES
    i. Annual certification of waste minimization? YES

11. Has the permittee certified annually to the Department that it has a program in place to reduce the volume and toxicity of hazardous waste they generate, and that the method of storage minimizes the threat to human health and the environment? YES

12 through 14 not applicable at this time.

CONTAINER STORAGE

15. Are containers managed in accordance with the plan approved in Part IIB, attachment II.B1 of the application? YES

16. a. Is the total volume of hazardous waste 6,912 gallons or less? YES

    b. Is the total volume of waste and product 29,400 gallons or less? YES

17. Is spilled or leaked waste removed from the collection system, analyzed, and disposed of in accordance with Part II.B of the Application? YES

18. Does the permittee take precautions to to prevent accidental ignition or reaction of waste in accordance with 40 CFR 264.17? YES

19. Are containers holding ignitable or reactive waste kept 50 feet from the facility property line? YES

20. Has waste been placed in unwashed containers that held incompatible waste? NO

21. Has the permittee pumped liquid from spill collection tanks into compatible containers upon discovery of spills or leaks? NA

22. Has the permittee handled the containers that contain spill material as an appropriate hazardous waste and disposed of it properly under the RCRA rules and regulations? NA

23. Has the permittee maintained aisle space as illustrated in the drum configuration listed in attachment 1 to this permit? YES

RETURN/FILL AREA

24. a. Has the permittee pumped liquid from spill collection trench into compatible containers upon discovery of spills or leaks? YES
    b. Has the permittee handled those containers as an appropriate hazardous waste and disposed of it in accordance with the RCRA rules and regulations? YES

25. a. Are there three 16-gallon drum satellite accumulation containers next to the drum washer units? YES
    b. Are these satellite drums labeled "waste sludge", "glass/metal", "rags/absorbents"? NO, two were correctly labeled, the 3rd was not.
    c. Are these satellite drums managed in accordance with the RCRA rules and regulations? YES

26. a. Are the five 5-gallon satellite accumulation containers connected to the drain pans kept closed when not in use? 2 were observed, YES

    b. Are these satellite containers being managed in accordance with the RCRA rules and regulations? YES

ABOVE-GROUND STORAGE TANKS

27. Volume in tanks:
    a. Waste mineral spirits tank (not to exceed 19,000 gallons) 6840 gallons
    b. Used antifreeze tank (not to exceed 19,000 gallons) 0 gallons

28. a. Has the permittee pumped liquid from spill collection trench into compatible containers within 24 hours of any spills or leaks? NA
    b. Has the permittee handled those containers as an appropriate hazardous waste and disposed of it in accordance with the RCRA rules and regulations? NA

29. Has the permittee kept on file the written statements certifying the design of the tank system which attests that the tank system has been designed, installed, and maintained in accordance with 40 CFR 264.193(b) & (d)? YES

30. Has the permittee kept a log of daily inspections of the tank system in the operating record? YES

31. Has the permittee had the tank system inspected every 5 years by a certified P.E. for structural integrity, wall thickness, and a hydraulic test? NA

32. Has the permittee maintained the secondary containment system in accordance 40 CFR? NO

33. In case of a leak or spill has the permittee:
    a. Ceased use of the tank? NA
    b. Removed waste from tank or containment structure? NA
    c. Contained identifiable releases to the environment NA
    d. Made proper notifications and submitted required reports? NA
    e. Provided secondary containment, repair, or closure? NA
    f. Made certification of required repairs? NA

34. Has the permittee complied with the protective distance requirements of the National Fire Protection Ass. "Flammable & Combustible Liquids Code" for placement of the tank system? YES

35. Has the permittee placed waste in tanks that previously held incompatible waste? NO

36. Has the permittee complied with the following general operating requirements of 40 CFR 264.194?

    a. not placed waste or reagents into tanks if the the possibility exists that this may cause the tank system to fail? YES
    b. used appropriate controls and practices to prevent spills and overflows? YES
    c. complied with the requirements of 40 CFR 264.196 if a leak or a spill occurs? YES

37. Has the permittee maintained, inspected, and operated spill and overfill prevention controls during loading and unloading procedures occurring at the tank storage units in accordance with 40 CFR 264.194? NO

Date 11/30/94
Inspector CHERYL MARX
Facility ID# FLD 984 171 694

TRANSPORTERS CHECKLIST

I. SITE NAME: SAFETY-KLEEN / MEDLEY

II. TRANSPORTER REQUIREMENTS (40 CFR 263)

1. Do vehicles transporting hazardous waste have the appropriate placards? (263.10)(49 CFR 172.500) * ___Yes ___No

2. Does transporter have an EPA identification number? (263.11(a)) * ___Yes ___No

3. Does the transporter use manifest system as required by 263.20? * ___Yes ___No

Do the manifests contain at least:

a. Name, address, and EPA ID of transporter? * ___Yes ___No

b. Name, address, and EPA ID code of generator? * ___Yes ___No

c. Name, address, identification code of designated permitted facility? * ___Yes ___No

d. Corresponding manifest document number? * ___Yes ___No

e. Description and quantity of each hazardous waste? * ___Yes ___No

f. Signature of subsequent transporters? * ___Yes ___No

g. Signatures signifying proper delivery or reasons why delivery could not be certified? * ___Yes ___No

h. EPA waste codes? * ___Yes ___No

* There were no SK trucks available to inspect at the time of the inspection.

DATE 11/30/94
FACILITY ID FLD 984 171 694

4. International shipments: (263.20(g)) X N/A

   a. Record of date waste left U.S.? NA Yes ___No

   b. Presence of one signed copy in records? NA Yes ___No

   c. Signed copy of manifest returned to the generator? NA Yes ___No

   d. Copy of the manifest given to a U.S. Customs official at the point of departure from the United States? NA Yes ___No

5. For SQG waste:

   a. Is waste transported according to reclamation agreement? X Yes ___No

   b. Is following information recorded on a shipping paper:

      Name, address, and EPA ID of waste generator * ___Yes ___No
      Quantity of waste accepted * ___Yes ___No
      DOT - required shipping info * ___Yes ___No
      Date waste is accepted * ___Yes ___No

   c. Does transporter carry this shipping paper during transport? * ___Yes ___No

   d. Are records maintained for three years after termination or expiration of reclamation agreement? ✓ Yes ___No

6. Are copies of the manifest retained for 3 years? (263.22) ✓ Yes ___No

7. Is there evidence of discharge of hazardous waste? (263.30) ___Yes ✓ No

8. Has transporter demonstrated the financial responsibility required under 17-30.170(2) ✓ Yes ___No

9. Does the transporter verify financial responsibility with the Department annually (17-730.170(3))? ✓ Yes ___No

III. TRANSFER FACILITY REQUIREMENTS (17-730.171)

A. Does transporter comply with 10 day storage limit for transfer facilities? (263.12) X Yes ___No

   1. Is the hazardous waste packaged according to 262.30? (263.12) X Yes ___No

DATE 11/30/94
FACILITY ID FLD 984 171 694

B. General Facility Standards (265 Subpart B)

1. Security (265.14)

a. Is the facility security system adequate to minimize unauthorized entry? X Yes ___ No

b. Are signs posted and legible for 25 feet? X Yes ___ No

2. Inspection Requirement (265.15)

a. Does the facility have a copy of the Inspection Plan? X Yes ___ No

b. Does the facility have completed inspection logs? X Yes ___ No

c. Were the deficiencies corrected in a timely manner? ___ Yes X No

d. Are the inspection logs maintained at the facility for 3 years? X Yes ___ No

3. Personnel Training (265.16)

a. Do management personnel complete hazardous waste training? X Yes ___ No

- Is training on the job? X Yes ___ No
- Is training in the classroom? X Yes ___ No

b. Do laborers who handle hazardous waste complete training? X Yes ___ No

- Is training on the job? X Yes ___ No
- Is training in the classroom? X Yes ___ No

c. Does training include:

- Emergency response procedures? X Yes ___ No
- Inspection procedures? X Yes ___ No
- Operation of hazardous waste handling equipment? X Yes ___ No
___ Yes ___ No

d. How often is training reviewed? ANNUALLY

e. Does the facility have personnel training records including:

- Job title and description of position? X Yes ___ No
- Description of employee's training X Yes ___ No

f. Is training successfully completed within 6 months of hiring/transfer to HW position? X Yes ___ No

g. Are records maintained for three years at the facility? X Yes ___ No

4. Ignitable, Reactive, or Incompatible Waste (265.17)

a. Is the waste separated and confined from sources of ignition or reaction, sparks, spontaneous ignition, and radiant heat? X Yes ___ No

b. Are "No Smoking" signs posted in the area? X Yes ___ No

C. Preparedness and Prevention (265 Subpart C)

1. Is there evidence of fire, explosion or contamination of the environment? (265.31 - Maintenance and Operation of Facility) ___ Yes X No

If yes, use narrative explanation.

2. Is the facility equipped with (265.32 - required equipment):

a. Internal communications or alarm system? X Yes ___ No
Is it easily accessible in case of emergency? X Yes ___ No

b. Telephone or two-way radio to call emergency response personnel? X Yes ___ No

c. Portable fire extinguishers, fire control equipment, spill control equipment and decontamination equipment? X Yes ___ No

Is this equipment tested to assure its proper operation? X Yes ___ No

How frequently? DAILY / WEEKLY / ANNUALLY

d. Water of adequate volume for hoses, sprinklers or water spray system? X Yes ___ No

(1) Describe source of water. CITY WATER

(2) Indicate flow rate and/or pressure and storage capacity, if applicable. N/A

DATE 11-30-94
FACILITY ID FLD 984 171 694

3. Is there sufficient aisle space to allow unobstructed movement of personnel and equipment? (e.g., adequate aisle space in between barrels to check for leakage, corrosion and proper labeling, etc.) (265.35 - Required Aisle Space) X Yes ___No

4. Has the owner/operator made arrangements with the local authorities to familiarize them with characteristics of the facility? (Layout of facility, properties of hazardous waste handled and associated hazards, places where facility personnel would normally be working, entrances to roads inside facility, possible evacuation routes.) (265.37 - Arrangements with Local Authorities) ___N/A ✓Yes ___No

If N/A, explain_____

5. In the case that more than one police or fire department might respond, is there a designated primary authority? (265.37 - Arrangements with Local Authorities) ✓N/A ___Yes ___No

If yes, indicate primary authority._____
Is the fire department a city or volunteer fire department? City

6. Does the owner/operator have phone number of and agreements with state emergency response teams, emergency response contractors and equipment suppliers? (265.37 - Arrangements with Local Authorities) ✓Yes ___No

Are they readily available to the emergency coordinator? ✓Yes ___No

7. Has the owner/operator arranged to familiarize local hospitals with the properties of hazardous waste handled and types of injuries that could result from fires, explosions, or releases at the facility? (265.37 - Arrangements with Local Authorites) ✓Yes ___No

If no, has the owner/operator attempted to do this?

8. If the State, or local authorities decline to enter into the above referenced agreements, has this been documented in the operation record? (265.37 - Arrangements with Local Authorities) NA Yes ___No

DATE 11-30-94
FACILITY ID FLD 984171694

C. Contingency Plan and Emergency Procedures (265 Subpart D)

1. Does the facility have a contingency plan? (265.51 - Purpose and Implementation of Contingency Plan) ✓ Yes ___ No

2. Is it maintained at the facility? (265.53 - Copies of Contingency Plan) ✓ Yes ___ No

3. Is the contingency plan a revised SPCC Plan (265.52 - Content of Contingency Plan) ✓ Yes ___ No

   a. Does the plan include:

      (1) Action personnel will take? ✓ Yes ___ No

      (2) Evacuation routes? ✓ Yes ___ No

      (3) Emergency Equipment? ✓ Yes ___ No

      (4) Is the emergency equipment properly inspected and maintained? ___ Yes ✓ No

4. Is there an emergency coordinator on site or within short driving distance of the plant at all times? (265.55 - Emergency Coordinator) ✓ Yes ___ No

5. Who is the emergency coordinator? Peter Ciocio

6. Has the facility supplied local police and fire departments with a copy of the contingency plan? (265.53(b) - Content of Contingency Plan) ✓ Yes ___ No

D. Container Storage Checklist

(Subpart I - Use and Management of Containers 265.170)

1. Are the containers in good condition (265.171)? (check for leaks, corrosion, bulges, etc.) ✓ Yes ___ No

2. If a container is found to be leaking, does the operator transfer the hazardous waste from the leaking container? ✓ Yes ___ No

3. Is the waste compatible with the containers and/or its liner? (265.172) ✓ Yes ___ No

DATE 11-30-94
FACILITY ID FLD 984 171 694

4. Are containers holding hazardous waste opened, handled or stored in such a manner as to cause the container to rupture or leak? (265.173) ___Yes ✓No

If yes, explain using narrative.

5. Are each of the containers inspected at least weekly (265.174)? ✓Yes ___No

If no, explain using narrative concerning the frequency of inspection.

6. Are containers holding ignitable or reactive wastes located at least 15 meters (50 feet) from the facility property line? (265.176) ✓Yes ___No

If yes, explain using narrative.

7. Are incompatible wastes stored in the same containers? ___Yes ✓No

If yes, explain using narrative.

8. Are containers holding incompatible wastes kept apart by physical barrier or sufficient distance? ✓Yes ___No

If no, explain using narrative.

E. Does facility have a written closure plan satisfying requirements of closure performance, notification, and decontamination standards of 40 CFR 265.111, 265.112(c), 265.114, 265.115? (17-30.171(2)(b)) ✓Yes ___No

F. Is hazardous waste that is stored in containers or vehicles stored on a man made surface which is capable of preventing spills or releases to the ground? (17-730.171(2)(d)) ✓Yes ___No

G. Is a written log maintained for all waste entering or leaving the transfer facility? (17-730.171(2)(e)) ✓Yes ___No

Does the log contain:

Generators' names? ✓Yes ___No
Manifest numbers? ✓Yes ___No
Dates when waste enters and leaves facility? ✓Yes ___No

DATE 11-30-94
FACILITY ID FLD 984171694

H. Has the facility notified the department on Form 17-730.900(6) (Transfer facility notification form)? (17-730.171(3)) ✓ Yes ___ No

I. Does the transfer facility have an EPA/DER ID number? ✓ Yes ___ No

IV. UNREGULATED WASTES (HOUSEHOLD/CONDITIONALLY EXEMPT SMALL QUANTITY GENERATOR WASTES) ✓ N/A

1. Does the transporter have documentation that this waste was generated by an unregulated source? NA Yes ___ No

2. If no, is the transporter assuming responsibility as the generator of this waste? NA Yes ___ No

   a. If yes, complete the applicable Generator or Small Quantity Generator checklist.

   b. If no, the inspector should inform the transporter that he will be held responsible as the generator of the waste and will be reinspected to ensure that the applicable requirements are being satisfied. A follow-up inspection should be scheduled as follows:

      i) 90 days after initial inspection if the quantity of "unregulated" wastes on site exceed 1000 kg.

      ii) 180 days after initial inspection if the quantity of "unregulated" wastes on site are less than 1000 kg.

3. Does the transporter mix/consolidate hazardous wastes of different DOT shipping descriptions 263.10(c)(2)? NA Yes ___ No

   If yes, complete the Generator checklist.

V. LAND BAN WASTE

1. Does the transporter manage restricted (land ban) wastes? ✓ Yes ___ No

   If yes, check appropriate box(es).

   "California List" ✓
   F--- List ✓

RCRA INSPECTION REPORT
LAND DISPOSAL RESTRICTIONS CHECKLIST

Facility ID#: FLD 984 171 694 Date of Inspection: 11/30/94

Facility Name: Safety-Kleen Medley (SKM)

Facility Address: 8755 Northwest 95th Street, Medley, Florida 33178

Facility Phone #: (305) 884-0123 Facility Contact: Peter Ciocio

Contact's Title: Branch Manager

Persons present for Inspection: Peter Ciocio (SKM)

John Ercole (DEP)

Knox Mckee (DEP)

Manuel Delosantos (DEP)

Cheryl Marx (DEP)

Date and Time Inspection Began: 11/30/94 9:35 am

Date and Time Inspection Ended: 11/30/94 4:00 pm

1.(a) Describe the generator's restricted waste streams (use the LDR Treatment Standards list) and the destination of each:

All of the hazardous waste manifests reviewed indicated that all of the hazardous waste streams were being transported to Safety-Kleen in Lexington, South Carolina (EPA ID# SCD077995488). 223,056 gallons of D001, D039 mineral spirits waste from the bulk storage tank were generated since 12/22/93.

1,527 kilograms/month of spent perchloroethylene (F002, D007, D039, D040)

6,768 kilograms/month of spent perchloroethylene filters (F002, D039)

1,799 kilograms/month of waste paint related material (D001, F003, F005)

3,159 kilograms/month of waste mineral spirits sludge (D001, D039)

808 kilograms/month of immersion cleaner (D006, D008)

Revision # 1
Date 3-12-91

(b) Are the wastes correctly identified? (You may need to review TOC, TSS, HOC, TCLP, PFLT,3rd Thirds WW, NWW, Technology Acronyms, Tables 268.41, 268.42 & 268.43.) [268.7 Notices for 3rd Thirds includes variance until 8-8-90: Minimum Technology).

YES

(c) Is the generator storing restricted waste on site?

YES

Is the generator complying with 268.50?

YES

Is the generator complying with 262.34 as required by 268.50(a)(1)?

YES

Are the wastes identified correctly?

YES

Have LDR wastes been stored over 90 days (generator)?

NO

If the facility is a TSD and been storing LDR wastes for over a year, can the TSD prove (if challenged) that the reason for such storage is solely for the purpose of accumulation of such quantities of hazardous waste as are necessary to facilitate proper recovery, treatment, or disposal?

NA

(d) Does the generator have a case-by-case extension or a variance? (specify)

NO

II. Waste with Treatment Standards

(a) Do the Notifications required by 268.7 include:

EPA Hazardous Waste #: YES

Applicable Treatment Standards or proper reference for wastes other than F001-F005, F020-F023, F026-F028, and California List (3rd Third Rule):

YES

Manifest Document #'s: YES

Waste Analysis Data, where available: YES

LDR CHECKLIST

Certification Statement if Generator
is Claiming to meet Treatment Standards: NA

Date Waste is Subject to Prohibitions if
Subject to a Case-By-Case Extension or Variance: NA

III. Does the generator maintain the above records on-site for five (5) years?

NO, 24 LDR certifications were unavailable for inspection.

MANIFEST #	SHIPMENT DATE	MANIFEST #	SHIPMENT DATE
08294	8/29/94	80194	8/2/94
97646	4/14/94	50294	5/2/94
11161	10/25/94	11162	9/12/94
11164	9/26/94	11165	10/3/94
11166	10/10/94	11167	10/17/94
11168	11/2/94	11169	11/10/94
11170	11/15/94	11212	9/20/94
49628	8/26/94	94927	8/1/94
80594	8/8/94	94081	8/15/94
07594	7/5/94	49017	7/11/94
07189	7/18/94	25794	7/26/94
49906	9/6/94	81294	8/12/94

IV. Additional Notes and Comments:
(Check for soft hammer compliance prior to May 8, 1990)

Revision # 1
Date 3-12-91

Florida Department of Environmental Protection

Lawton Chiles
Governor

Southeast District
P.O. Box 15425
West Palm Beach, Florida 33416

Virginia B. Wetherell
Secretary

HAZARDOUS WASTE INSPECTION EXIT INTERVIEW

FACILITY: Safety Kleen Medley DATE: 11-30-94 TIME: 4:00 pm

INTERVIEW PARTICIPANTS: Jon Ercole, Peter Ciocio, Manny Delosantos, Knox McKee, Cheryl Marx

This exit interview is the Department's attempt to advise you early in the process of possible violations of Florida Administrative Code Chapter 17-730, which adopts 40 CFR Parts 260-266 by reference. It is possible that the list of violations noted (checked) is incomplete. After a complete internal file review by the Department an inspection report will be finalized. In most cases, the violations noted by the inspector will not change in the final report, therefore, you are advised to immediately begin correcting these deficiencies noted below.

Please also be aware that the Department has signed an enforcement agreement with the U.S. Environmental Protection Agency which calls for the assessment and collection of monetary penalties when violations, such as these, are noted. While your quick response in correcting the violations may not reduce the calculated penalties, continued non-compliance may result in greater penalty liability.

The following violations have been tentatively identified:

___ 1. Hazardous Waste Determination [262.11].
___ 2. Notification as a generator [262.12].
✓ 3. Manifest Deficiencies [262 Subpart B].
___ 4. Recordkeeping [test results, manifest, biennial report].
___ 5. Personnel Training [265.16; 262.34(d)].
___ 6. Contingency Plan [265 Subpart D; 262.34(d)(5)].
___ 7. Preparedness and prevention [265 Subpart C; 262.34(d)(4)].
___ 8. Container Requirements [265 Subpart I; 262.34(d)(2)].
___ 9. Tank requirements [265 Subpart J].
___ 10. Exceeding accumulation storage time [262.34(a); 262.34(d)].
___ 11. Accumulation start date & labels on containers [262.34(a)(2)&(3)].
___ 12. Accumulating >1000 kg without meeting SQG standards [261.5].
___ 13. Not ensuring delivery of HW to a proper TSD facility [261.5].
___ 14. Notification as a TSD facility [264.11].
___ 15. Treatment, storage or disposal without a permit [F.A.C. 17-730].
___ 16. Ground water monitoring [265 Subpart F].
___ 17. Security Requirements [265.14].
___ 18. Storing HW less than 50 feet from the property line [265.176].
___ 19. "No Smoking" signs, ignitable/reactive requirements [265.17].
___ 20. Closure/Post-closure [265 Subpart G].
___ 21. Financial Responsibility [264 Subpart H].
___ 22. Failure to comply with the provisions of a Department Issued Permit or with the provisions of the Consent Order.
✓ 23. Other LDR deficiencies 40 CFR 268.7

COMMENTS: Facility Failed to fill out exception reports for 4 missing original Manifests. 24 Missing LDR Certifications

Peter Ciocio
RECEIPT ACKNOWLEDGED BY

Cheryl Marx
INVESTIGATOR

Printed on recycled paper.

PENALTY COMPUTATION WORKSHEET

Violator Safety - Kleen Medley

Type of Facility: RCRA Permitted Storage facility + Generator, Transfer Facility

Name(s) of Department Staff Responsible for the Penalty Computation:

Cheryl Marx Joni Crouse Vince Pehrus J. Kaf Mifee J.

Date: 1-19-95

Part I - Class B (no Penalty) Determination

Rationale For Class B Determination

Part II - Class A Penalty Determination

	Violation Type	Potential For Harm	Extent Of Dev.	Matrix Amount	Multi-Day	Adjustment	Total
1.	268.7 40 CFR 264.15(c)	Minor	Minor	$300.00	$2300.00	0	2600.00
2.	40 CFR Subpart D 264.54	Moderate	Minor	$4,000.00	0	0	4,000.00
3.	OP Specific Cond #15	Minor	Minor	$300.00	0	0	300.00
4.							
5.							
6.							
7.							
8.							
9.							
10.							

Total Penalties For All Violations 6,900.00

Part III - Adjustments and Multi-Day Penalties

Adjustments:	Dollar Amount
Good Faith/lack of good Faith prior to Discovery:	0
Justification:	
Good Faith/lack of good Faith After Discovery:	0
Justification:	
History Of Non-Compliance:	0
Justification:	
Economic Benefit Of Non-Compliance:	0
Justification:	
Ability To Pay:	0
Justification:	
Total Adjustments:	0

Multi-Day Penalties	Dollar Amount
Number of days adjustment factor(s) to be applied:	23
OR	
Number of days matrix amount is to be multiplied:	
Justification:	

RCRA PENALTY ASSESSMENT WORK SHEET

CASE NAME: Safety-Kleen / Medley

REGULATION VIOLATED: 268.7 Land Disposal Restriction
Record Keeping

Assessments for each violation should be determined on separate worksheets and totalled on the RCRA Penalty Summary form.

Part I - Seriousness of Violation Penalty

Potential for Harm: Minor

Extent of Deviation: Minor

3. Note matrix cell range, justification for seriousness of violation and indicate:

Penalty Amount Chosen: $300.00

4. Per-Day Assessment: $2,300.00

Part II - Penalty Adjustments

	Percentage Change	Dollar Amount
1. Good Faith Efforts	0	0
2. Degree of Willfulness and/or negligence	0	0
3. History of Noncompliance	0	0
4. Other Unique Factors	0	0
5. Adjusted per-day penalty (Line 4, Part I and Lines 1-4, Part II)		0
6. Number of days in Violation :		
7. Multi-day Penalty (Line 5 X Line 6)		0
8. Economic Benefit of Noncompliance		0
9. Total (Lines 7 + 8)		0
10. Ability to Pay Adjustment		0

TOTAL PENALTY AMOUNT $2,600.00

Potential for Harm Justification:
The potential for harm is minor because the waste reached the TSD with a completed manifest identifying the waste streams by name and EPA waste code and the LDRC. SKM only failed to retain the copies

Extent of Deviation Justification:
The deviation from the Rule is minor. SKM did use a LDRC, they failed to retain copies for 24 shipments out of 103 shipments that were reviewed. According to OEP penalty calculation guidance the deviation from the rule is minor

Justification of Penalty Adjustments:

Matrix Cell Ranges		Extent of Deviation from Requirement: Major	Moderate	Minor
Potential for Harm	Major	$25,000 to $20,000	$19,999 to $15,000	$14,999 to $11,000
	Moderate	$10,999 to $8,000	$7,999 to $5,000	$4,999 to $3,000
	Minor	$2,999 to $1,500	$1,499 to $500	$499 to $100

Justification for Further Adjustments:

REVISIONS
Potential For Harm: _____
Extent of Deviation: _____
Revised TOTAL PENALTY : _____

RANKING SYSTEM FOR POTENTIAL FOR HARM

Facility Name: Safety-Kleen / Medley

Rule(s) Violated: 40 CFR 264.15 (c) 40 CFR Subpart D

NATURE OF WASTE: 4

Category A = 8
Category B = 4

VOLUME OF WASTE: 8

>26 drums = 8
6-25 drums = 5
1-5 drums = 2

RECEPTORS: 1 + 1 = ~~14~~ 2

Discharge/
Potential = 4
No Potential = 1

>1000 people = 4
100-1000 people = 3
10-100 people = 2
<10 people = 1

TOTAL SCORE: 14

MAJOR POTENTIAL FOR HARM: 19-24
MODERATE POTENTIAL FOR HARM: 13-18
MINOR POTENTIAL FOR HARM: 8-12

ASSIGNED BY: Cheryl Marx
Jon Crouse
Valence Pickens
J. H. Mike Jr.

DATE: 1-19-95

safety-kleen corp.

LAND DISPOSAL RESTRICTION AND WASTE ANALYSIS CRITERIA FORM

RECEIVED
JAN 10 1995
DEPT OF ENV PROTECTION
WEST PALM BEACH

TO: _____ EPA ID NO. _____
(DESIGNATED FACILITY) (DESIGNATED FACILITY)

ADDRESS: _____

Under manifest/sales service number _____, the generator noted below is shipping to you a waste determined to be restricted under 40 CFR Part 268. In accordance with CFR Part 268.7, the generator hereby provides notice that the waste is restricted from land disposal.
A copy of this form must be kept by the generator and facility for five (5) years from the date of waste shipment.

PLEASE CHECK THE APPROPRIATE BOXES

	WASTE NAME (FOR NON-WASTE WATER)	WASTE CODE	THE WASTE MAY CONTAIN THE FOLLOWING RESTRICTED CONSTITUENTS		TREATMENT STANDARD (mg/l) OR METHOD
☐	Waste Paint Related Material SKDOT 523	F003	Acetone		160 (non-waste water)
		F003	Methyl Isobutyl Ketone		33 (non-waste water)
		F003	Xylene		30 (non-waste water) **
		F003	Methanol		.75 (non-waste water)
		F005	Methyl Ethyl Ketone		36 (non-waste water)
		F005	Toluene		10 (non-waste water) **
		D001	Ignitable Liquid (High TOC Subcategory)		Combustion (CMBST) or recovery (RORGS) (40 CFR 268.42)(non-waste water)
		D008	Lead (TOC Subcategory)		5.0 (non-waste water)
		D018	Benzene		10 (non-waste water)
		D035	Methyl Ethyl Ketone		36 (non-waste water)
		D039	Tetrachloroethylene		6.0 (non-waste water)
		D040	Trichloroethylene		6.0 (non-waste water)
☐	Waste Paint Related Material SKDOT 524	F003	Acetone		160 (non-waste water)
		F003	Methyl Isobutyl Ketone		33 (non-waste water)
		F003	Xylene		30 (non-waste water) **
		F003	Methanol		.75 (non-waste water)
		F005	Methyl Ethyl Ketone		36 (non-waste water)
		F005	Toluene		10 (non-waste water) **
		D001	Ignitable Liquid (High TOC Subcategory)		CMBST or RORGS (40 CFR 268.42)(non-waste water)
		D035	Methyl Ethyl Ketone		36 (non-waste water)
		D039	Tetrachloroethylene		6.0 (non-waste water)
☐	Waste Paint Booth Filters	D007	Chromium	This hazardous debris is subject to the alternative treatment standards of 40CFR 268.45.	5.0 (non-waste water)
☐	Waste Petroleum Naphtha (Dry Cleaning)	D001	Ignitable Liquid (High TOC Subcategory)		CMBST or RORGS (40 CFR 268.42)(non-waste water)
		D039	Tetrachloroethylene		6.0 (non-waste water)
☐	Waste Perchloroethylene	F002	Tetrachloroethylene		6.0 (non-waste water) **
		D007	Chromium		5.0 (non-waste water)
		D039	Tetrachloroethylene		6.0 (non-waste water)
		D040	Trichloroethylene		6.0 (non-waste water)
☐	Waste Perc. Filters	F002	Tetrachloroethylene	This hazardous debris is subject to the alternative treatment standards of 40CFR 268.45.	6.0 (non-waste water) **
		D039	Tetrachloroethylene		6.0 (non-waste water)
☐	Waste Photo Fixer Solution	D011	Silver		5.0 (non-waste water)
☐	Separator Water	F002	Tetrachloroethylene		.056 (waste water)
		D039	Tetrachloroethylene		.056 (waste water)
☐	Waste Sterilant - Hot	D001	Ignitable Liquid (High TOC Subcategory)		CMBST or RORGS (40 CFR 268.42)(non-waste water)
		D035	Methyl Ethyl Ketone		36 (non-waste water)

The constituent composition is based on knowledge of the waste (via Material Safety Data Sheets for the chemical(s) used, and the process which created the waste).

* These treatment standards do not preclude reclamation prior to final disposition.

** Prior to 12/19/94, the federal treatment standards for these constituents were: Xylene - 28 mg/l; Toluene - 28 mg/l; Tetrachloroethylene - 5.6 mg/l. These standards may still apply in some states.

PHASE II LDR NOTICE: GENERATOR IS NOT REQUIRED TO LIST UNDERLYING CONSTITUENTS BECAUSE TREATER WILL MONITOR FOR ALL 216 REGULATED CONSTITUENTS PRIOR TO DISPOSAL.

GENERATOR COMPANY: _____ EPA ID NO. _____

Safety-Kleen Corp. manages the above waste through its recycling and fuels programs in accordance with all applicable elements of the land disposal restrictions.

Safety-Kleen

LAND DISPOSAL RESTRICTION AND WASTE ANALYSIS CRITERIA FORM

PHASE II LDR NOTICE: GENERATOR NOT REQUIRED TO LIST UNDERLYING CONSTITUE
Safety-Kleen BECAUSE TREATER WILL MONITOR FOR THE CONSTITUENTS BEFORE LAND DISPOSAL.

TO: SAFETY-KLEEN CORP. (DESIGNATED FACILITY) EPA ID NO. _____ (DESIGNATED FACILITY)

MAN DOC:

ADDRESS: _____

Under manifest / sales service number _____ the generator noted below is shipping to you a waste determined to be restricted under 40 CFR Part 268. In accordance with 40 CFR Part 268.7, the generator hereby provides notice that the waste is restricted from land disposal.

A copy of this form must be kept by the generator and facility for five (5) years from the date of waste shipment. ★ SEE BELOW

PLEASE ☑ THE APPROPRIATE BOXES

WASTE NAME (FOR NON-WASTE WATER)	WASTE CODE	THE WASTE MAY CONTAIN THE FOLLOWING RESTRICTED CONSTITUENTS	TREATMENT STANDARD (mg/l) OR METHOD
☐ Waste Petroleum Naphtha 105	D001,	Ignitable Liquid (High TOC Subcategory)	Incineration (INCIN), fuel substitution (FSUBS) or recovery (RORGS) (40 CFR 268.42) (non-waste water)
	D006,	Cadmium	INCIN (40 CFR 268.42)(non-waste water)
	D008,	Lead	1.0 (non-waste water)
	D018,	Benzene	5.0 (non-waste water)
	D035,	Methyl Ethyl Ketone	Not Established
	D039,	Tetrachloroethylene	10 (NON-WASTE XXXXXXXX WATER)
	D040,	Trichloroethylene	36 (NON-WASTE XXXXXXXX WATER)
			Not Established
			6.0 (NON-WASTE XXXXXXXX WATER)
			Not Established
			6.0 (NON-WASTE XXXXXXXX WATER)
☐ Waste Petroleum Naphtha 140	D001,	Ignitable Liquid (High TOC Subcategory)	INCIN, FSUBS, or RORGS (40 CFR 268.42)(non-waste water)
	D006,	Cadmium	1.0 (non-waste water)
	D008,	Lead	5.0 (non-waste water)
	D018,	Benzene	10 (NON-WASTE XXXXXXXX WATER)
	D039,	Tetrachloroethylene	Not Established
			6.0 (NON-WASTE XXXXXXXX WATER)
			Not Established
☐ Cyclonic, 150 Premium Solvent OR Actrel Solvent (If customer specific TCLP is not available)	D006,	Cadmium	1.0 (non-waste water)
	D008,	Lead	5.0 (non-waste water)
	D018,	Benzene	10 (NON-WASTE XXXXXXXX WATER)
	D039,	Tetrachloroethylene	Not Established
	D040,	Trichloroethylene	6.0 (NON-WASTE XXXXXXXX WATER)
			Not Established
☐ Waste Petroleum Naphtha (sludges from Safety-Kleen Service Center Operations)	D001,	Ignitable Liquid (High TOC Subcategory)	INCIN, FSUBS, or RORGS (40 CFR 268.42)(non-waste water)
	D006,	Cadmium	1.0 (non-waste water)
	D008,	Lead	5.0 (non-waste water)
	D018,	Benzene	10 (NON-WASTE XXXXXXXX WATER)
	D039,	Tetrachloroethylene	Not Established
			6.0 (NON-WASTE XXXXXXXX WATER)
			Not Established
☐ Waste Compound Cleaning Liquid/ Immersion cleaner 699	D006,	Cadmium	1.0 (non-waste water)
	D008,	Lead	5.0 (non-waste water)
	D018,	Benzene	10 (NON-WASTE XXXXXXXX WATER)
	D021,	Chlorobenzene	Not Established
	D027,	1, 4-Dichlorobenzene	6.0 (NON-WASTE XXXXXXXX WATER)
	D035,	Methyl Ethyl Ketone	Not Established
	D039,	Tetrachloroethylene	36 (NON-WASTE XXXXXXXX WATER)
	D040,	Trichloroethylene	6.0 (NON-WASTE XXXXXXXX WATER)
			6.0 (NON-WASTE XXXXXXXX WATER)
			Not Established

OPTIONAL STATE INFO.

MACHINE NUMBER	SPECIFIC GRAVITY	EXCESS FLUID IN DRUM? (MS>2/3)(IC>1/3)(Y/N)	OFF - COLOR? (Y/N)	MORE THAN 30% SOLIDS?(Y/N)	UNUSUAL ODOR? (Y/N)	UNUSUAL MATERIALS INCLUDED/ADDED? (Y/N)

SPECIFIC GRAVITY ACCEPTANCE GUIDELINES

SALES REPRESENTATIVE SIGNATURE

The constituent composition is based on knowledge of the waste (via Material Safety Data Sheets for the chemical(s) used, and the process which created the waste).
*These treatment standards do not preclude reclamation prior to final disposition.

Generator Company: _____ EPA ID NO.: _____

Safety-Kleen Corp. manages the above waste through its recycling and fuels programs in accordance with all applicable elements of the land disposal restrictions.

printed on recycled

safety-kleen

Hand Delivered 12/9/94 - 3:26 PM

December 9, 1994

Cheryl E. Marx, Environmental Specialist
Florida Department of Environmental Protection
1900 South Congress Avenue, Suite A
P.O. Box 15425
West Palm Beach, FL 33416

RECEIVED
DEC 9 1994
DEPT OF ENV PROTECTION
WEST PALM BEACH

Subject: Safety-Kleen Corp., Medley Facility
DEP Inspection on 11-30-94
DEP/EPA ID FLD 984 171 694

Dear Ms. Marx:

We would like to provide additional information on the issues raised during the subject inspection. This letter is a good faith effort to resolve the Department's concerns. It is our intention and expectation that nothing in this letter shall be construed as an admission or used against Safety-Kleen Corp. in any administrative or judicial proceeding. Safety-Kleen Corp. expressly reserves any and all defenses it might have to the matters set forth during the inspection and does not waive any of those defenses by making this response.

1. The Hazardous Waste Inspection Exit Interview form contains the comment "Facility failed to fill out exception reports for 4 missing original manifests". For each hazardous waste shipment with Safety-Kleen as the generator, Safety-Kleen has on file a manifest copy with the signature of the designated facility, confirming delivery. Each copy was obtained within 45 days of the date the waste was accepted by the initial transporter. Therefore, there is no need for an Exception Report, under 40 CFR 262.42(2). The four manifest copies noted during the inspection are photo copies sent from the Recycle Center, since the carbon copies were apparently lost in the mail. The photo copies were received at Medley within the 45-day time frame.

2. The Exit Interview form notes "24 missing LDR Certifications". These 24 shipments were wastes manifested directly from the customer to the Safety-Kleen Recycle Center in Lexington, South Carolina with the Medley branch temporarily holding the waste during the transportation process. 40 CFR 268.7(a)(1) states "...the generator must notify the treatment or storage facility in writing of the appropriate treatment standards...". Since the Medley branch is not the treatment or storage facility for these 24 shipments, the branch did not retain a copy of the LDR form. We have obtained the LDR copies in question from the Recycle Center and have enclosed them for your review.

1000 NORTH RANDALL ROAD ELGIN, ILLINOIS 60123-7857 PHONE 708/697-8460 FAX 708/468-8500

3. Although not indicated as potential violations, Safety-Kleen has taken action regarding the following issues discussed during the inspection.

- Solvent in drum at the return and fill area. This was clean material and to be used by the warehouseman in routine operations.

- Floor coating in warehouse. Contracted with East Coast Speciality Coatings on 12-7-94 to re-coat floor. Work to be completed by 12-21-94.

- Transfer waste area lines not painted on the floor. This task will completed upon floor resealing, no later than 12-22-94.

- Emergency shower in warehouse area would not completely turn off. Repaired 12-7-94.

- Gloves, apron, soap and two pair of safety glasses missing from spill response center. Task completed 12-7-94.

- Cracks in secondary containment wall at the tank farm noted in log but not repaired. Contracted with East Coast Speciality Coatings on 12-7-94. Work to be completed by 12-21-94.

- High level alarm light not working. Noted in log but not replaced. Light ordered 12-7-94. Will be placed in service upon arrival.

- General comment by K. McKee, Jr. that housekeeping appeared slack. Branch Manager reviewing current cleaning schedules and investigating contractual "deep cleaning" services. Inland Waters of Tampa appears capable of cleaning and has the experience of working with hazardous waste facilities.

Safety-Kleen is proud of it's Florida facilities and the service we are providing to our clients and the quality of our environment. If you have questions or comments regarding the issue in this letter please call me at 407-734-2560. Upon your review of this correspondence I would welcome the opportunity to meet with you to further discuss any remaining concerns. I will call for an appointment.

Very Truly Yours,

Jon Ercole

Jon Ercole, CHMM
Environmental Engineer

RECEIVED
DEC 9 1994
DEPT OF ENV PROTECTION
WEST PALM BEACH

Enclosures: 24 LDR forms

LAND DISPOSAL RESTRICTION AND WASTE ANALYSIS CRITERIA FORM

...FETY-KLEEN CORP. (DESIGNATED FACILITY) EPA ID NO. ILD984908202
(DESIGNATED FACILITY)

...RESS: 130-A FRONTAGE RD LEXINGTON SC 29073

Missing on 11-30-94
Tanker Waste

...r manifest / sales service number 20194 ..., the generator noted below is shipping to you a waste determined to ...restricted under 40 CFR Part 268. In accordance with 40 CFR Part 268.7, the generator hereby provides notice that the waste is restricted from land disposal. ...copy of this form must be kept by the generator and facility for five (5) years from the date of waste shipment.

PLEASE ✓ THE APPROPRIATE BOXES

WASTE NAME (FOR NON-WASTE WATER)	WASTE CODE	THE WASTE MAY CONTAIN THE FOLLOWING RESTRICTED CONSTITUENTS	TREATMENT STANDARD (mg/l) OR METHOD
☑ Waste Petroleum Naphtha 105	D001, D006, D008, D018, D035, D039, D040,	Ignitable Liquid (High TOC Subcategory) Halogenated Organic Compounds (HOC's) ≥ 1000 mg/l Cadmium Lead Benzene Methyl Ethyl Ketone Tetrachloroethylene Trichloroethylene	Incineration (INCIN), fuel substitution (FSUBS) or recovery (RORGS) (40 CFR 268.42) (non-waste water) INCIN (40 CFR 268.42)(non-waste water) 1.0 (non-waste water) 5.0 (non-waste Water Not Established Not Established Not Established Not Established
☐ Waste Petroleum Naphtha 140	D001, D006, D008, D018, D039,	Ignitable Liquid (High TOC Subcategory) Cadmium Lead Benzene Tetrachloroethylene	INCIN, FSUBS, or RORGS (40 CFR 268.42)(non-waste water) 1.0 (non-waste water) 5.0 (non-waste Water Not Established Not Established
☐ Cyclonic, 150 Premium Solvent OR Actrel Solvent (If customer specific TCLP is not available)	D006, D008, D018, D039, D040,	Cadmium Lead Benzene Tetrachloroethylene Trichloroethylene	1.0 (non-waste water) 5.0 (non-waste Water Not Established Not Established Not Established
☐ Waste Petroleum Naphtha (sludges from Safety-Kleen Service Center Operations	D001, D006, D008, D018, D039,	Ignitable Liquid (High TOC Subcategory) Cadmium Lead Benzene Tetrachloroethylene	INCIN, FSUBS, or RORGS (40 CFR 268.42)(non-waste water) 1.0 (non-waste water) 5.0 (non-waste Water) Not Established Not Established
☐ Waste Compound Cleaning Liquid/ Immersion cleaner 699	D006, D008, D018, D021, D027, D035, D039, D040,	HOC's ≥ 1000 mg/l Cadmium Lead Benzene Chlorobenzene 1, 4-Dichlorobenzene Methyl Ethyl Ketone Tetrachloroethylene Trichloroethylene	INCIN (40 CFR 268.42)(non-waste water) 1.0 (non-waste water) 5.0 (non-waste Water Not Established Not Established Not Established Not Established Not Established Not Established

OPTIONAL STAMP INFO.

MACHINE NUMBER	SPECIFIC GRAVITY	EXCESS FLUID IN DRUM? (MS>2/3)(IC>1/3)(Y/N)	OFF - COLOR? (Y/N)	MORE THAN 30% SOLIDS?(Y/N)	UNUSUAL ODOR? (Y/N)	UNUSUAL MATERIALS INCLUDED/ADDED? (Y/N)
SPECIFIC GRAVITY ACCEPTANCE GUIDELINES						

he constituent composition is based on knowledge of the waste (via Material Safety Data Sheets for the chemical(s) used, and the process which created the waste). These treatment standards do not preclude reclamation prior to final disposition.

enerator Company: SAFETY-KLEEN

FORM 1339

LAND DISPOSAL RESTRICTION AND WASTE ANALYSIS CRITERIA FORM

SAFETY-KLEEN CORP. (DESIGNATED FACILITY) EPA ID NO. ILD984908202
(DESIGNATED FACILITY)

Missing 11-30-94 Tanker Waste

ADDRESS: 130-A FRONTAGE RD LEXINGTON SC 29073

Under manifest / sales service number 08294, the generator noted below is shipping to you a waste determined to be restricted under 40 CFR Part 268. In accordance with 40 CFR Part 268.7, the generator hereby provides notice that the waste is restricted from land disposal. A copy of this form must be kept by the generator and facility for five (5) years from the date of waste shipment.

PLEASE ☑ THE APPROPRIATE BOXES

WASTE NAME (FOR NON-WASTE WATER)	WASTE CODE	THE WASTE MAY CONTAIN THE FOLLOWING RESTRICTED CONSTITUENTS	TREATMENT STANDARD (mg/l) OR METHOD
☑ Waste Petroleum Naphtha 105	D001,	Ignitable Liquid (High TOC Subcategory)	Incineration (INCIN), fuel substitution (FSUBS) or recovery (RORGS) (40 CFR 268.42) (non-waste water)
		Halogenated Organic Compounds (HOC's) ≥ 1000 mg/l	INCIN (40 CFR 268.42)(non-waste water)
	D006,	Cadmium	1.0 (non-waste water)
	D008,	Lead	5.0 (non-waste Water
	D018,	Benzene	Not Established
	D035,	Methyl Ethyl Ketone	Not Established
	D039,	Tetrachloroethylene	Not Established
	D040,	Trichloroethylene	Not Established
☐ Waste Petroleum Naphtha 140	D001,	Ignitable Liquid (High TOC Subcategory)	INCIN, FSUBS, or RORGS (40 CFR 268.42)(non-waste water)
	D006,	Cadmium	1.0 (non-waste water)
	D008,	Lead	5.0 (non-waste Water
	D018,	Benzene	Not Established
	D039,	Tetrachloroethylene	Not Established
☐ Cyclonic, 150 Premium Solvent OR Actrel Solvent (If customer specific TCLP is not available)	D006,	Cadmium	1.0 (non-waste water)
	D008,	Lead	5.0 (non-waste Water
	D018,	Benzene	Not Established
	D039,	Tetrachloroethylene	Not Established
	D040,	Trichloroethylene	Not Established
☐ Waste Petroleum Naphtha (sludges from Safety-Kleen Service Center Operations	D001,	Ignitable Liquid (High TOC Subcategory)	INCIN, FSUBS, or RORGS (40 CFR 268.42)(non-waste water)
	D006,	Cadmium	1.0 (non-waste water)
	D008,	Lead	5.0 (non-waste Water)
	D018,	Benzene	Not Established
	D039,	Tetrachloroethylene	Not Established
☐ Waste Compound Cleaning Liquid/ Immersion cleaner 699	D006,	HOC's ≥ 1000 mg/l	INCIN (40 CFR 268.42)(non-waste water)
	D008,	Cadmium	1.0 (non-waste water)
	D018,	Lead	5.0 (non-waste Water
	D021,	Benzene	Not Established
	D027,	Chlorobenzene	Not Established
	D035,	1, 4-Dichlorobenzene	Not Established
	D039,	Methyl Ethyl Ketone	Not Established
	D040,	Tetrachloroethylene	Not Established
		Trichloroethylene	Not Established

MACHINE NUMBER	SPECIFIC GRAVITY	EXCESS FLUID IN DRUM? (MS>2/3)(IC>1/3)(Y/N)	OFF - COLOR? (Y/N)	MORE THAN 30% SOLIDS?(Y/N)	UNUSUAL ODOR? (Y/N)	UNUSUAL MATERIALS INCLUDED/ADDED? (Y/N)
SPECIFIC GRAVITY ACCEPTANCE GUIDELINES						

e constituent composition is based on knowledge of the waste (via Material Safety Data Sheets for the chemical(s) used, and the process which created the waste).
hese treatment standards do not preclude reclamation prior to final disposition.

nerator Company: SAFETY-KLEEN

FACILITY

FORM 1338

ALL O... ors of ha... continuation ... ardous waste in... nd transporters o...

...number and the uni... ...n Number, please co...

...1988 (REV 5/89)] plu...

7-42

NOTICE OF LAND DISPOSAL RESTRICTION OF WASTE

SAFETY-KLEEN CORP. (DESIGNATED FACILITY)

EPA ID NO. IL0984908202 (DESIGNATED FACILITY)

ADDRESS: 130-A FRONTAGE RD LEXINGTON SC 29073

Under manifest/sales service number 11170 Missing 11-15-94 the generator noted below is shipping to you a waste determined to be restricted under 40 CFR Part 268. In accordance with 40 CFR Part 268.7, the generator hereby provides notice that the waste is restricted from land disposal. A copy of this form must be kept by the generator and facility for five (5) years from the date of waste shipment.

✓	WASTE NAME	EPA WASTE CODE	THE WASTE MAY CONTAIN THE FOLLOWING RESTRICTED CONSTITUENTS	TREATMENT STANDARD (mg/l) OR METHOD (FOR NON-WASTE WATER)
☒	Waste Perchloroethylene	F002, D007	Tetrachloroethylene CHROMIUM	5.6 (non-waste water) 5.0 (NON-WASTE WATER)
☐	Waste Perc. Filters This hazardous debris is subject to the alternative treatment standards of 40CFR 268.45.	F002,	Tetrachloroethylene	5.6 (non-waste water)
☐	Waste Trichlorotrifluoroethane	F002,	Trichlorotrifluoroethane	28.0 (non-waste water)
☐	Waste 1,1,1 Trichloroethane	F002,	1, 1, 1 Trichloroethane	5.6 (non-waste water)
☐	Waste Petroleum Naphtha (Dry Cleaning)	D001, D039,	Ignitable Liquid (High TOC Subcategory) Tetrachloroethylene	INCIN, FSUBS, or RORGS (40 CFR 268.42) (non-waste water) Not Established
☐	Waste Paint Related Material	F003, F005, F003, F005, F003, F003, D001, D006, D007, D008,	Acetone Methyl Ethyl Ketone Methyl Isobutyl Ketone Toluene Xylene Methanol Ignitable Liquid (High TOC Subcategory) Cadmium Chromium Lead (TOC Subcategory)	160.0 (non-waste water) 36.0 (non-waste water) 33.0 (non-waste water) 28.0 (non-waste water) 28.0 (non-waste water) 0.75(non-waste water) INCIN, FSUBS, or RORGS (40 CFR 268.42) (non-waste water) 1.0 (non-waste water) 5.0 (non-waste water) 5.0 (non-waste water)
☐	Waste Antifreeze	D008, D039,	Lead Tetrachloroethylene	5.0 (non-waste water) Not Established

constituent composition is based on knowledge of the waste (via Material Safety Data Sheets for the chemical(s) used, and the process which created the waste). These treatment standards do not preclude reclamation prior to final disposition.

Generator Company: SAFETY KLEEN CORP EPA ID NO.: FL0984171694

OPIES M
hazardous
uation sheet U
s waste into the U
nsporters of hazard
nd the unique live
please contact S
this the

-097-42

NOTICE OF LAND DISPOSAL RESTRICTION OF WASTE

SAFETY-KLEEN CORP.
(DESIGNATED FACILITY)

EPA ID NO. ILD984908202
(DESIGNATED FACILITY)

ADDRESS: 130-A FRONTAGE RD LEXINGTON SC 29073

Under manifest/sales service number 11169. Missing 11-30-94
the generator noted below is shipping to you a waste determined to be restricted under 40 CFR Part 268. In accordance with 40 CFR Part 268.7, the generator hereby provides notice that the waste is restricted from land disposal. A copy of this form must be kept by the generator and facility for five (5) years from the date of waste shipment.

PLEASE CHECK THE APPROPRIATE BOXES

✓	WASTE NAME	EPA WASTE CODE	THE WASTE MAY CONTAIN THE FOLLOWING RESTRICTED CONSTITUENTS	TREATMENT STANDARD (mg/l) OR METHOD (FOR NON-WASTE WATER)
☐	Waste Petroleum Naphtha	D001, D039,	Ignitable Liquid (High TOC Subcategory) Tetrachloroethylene	INCIN, FSUBS, or RORGS (40 CFR 268.42) (non-waste water) Not Established
☐	Waste Petroleum Naphtha	D001, D008, D039,	Ignitable Liquid (High TOC Subcategory) All of the above, plus: Cadmium Lead Tetrachloroethylene	INCIN, FSUBS, or RORGS (40 CFR 268.42) (non-waste water) 1.0 (non-waste water) 5.0 (non-waste water) Not Established
☐	Waste Petroleum Naphtha (Sludges from Safety-Kleen Service Center Operations)	D001, D006, D039,	Ignitable Liquid (High TOC Subcategory) Cadmium Tetrachloroethylene	INCIN (40 CFR 268.42) (non-waste water) 1.0 (non-waste water) Not Established
☐	Waste Compound Cleaning Liquid Immersion Cleaner 399	D001, D006, D007, D008, D018, D021, D027, D030, D040,	Ignitable Liquid (High TOC Subcategory) Cadmium Chromium Lead Benzene Chlorobenzene 1,4-Dichlorobenzene Tetrachloroethylene Trichloroethylene	INCIN (40 CFR 268.42) (non-waste water) 1.0 (non-waste water) 5.0 (non-waste water) 5.0 (non-waste water) Not Established Not Established Not Established Not Established
☑	Waste Perchloroethylene	F002, D007	Tetrachloroethylene CHROMIUM	5.6 (non-waste water) 5.0 (NON-WASTE WATER)
☑	Waste Perc. Filters This hazardous debris is subject to the alternative treatment standards of 40CFR 268.45.	F002,	Tetrachloroethylene	5.6 (non-waste water)
☐	Waste Trichlorotrifluoroethane	F002,	Trichlorotrifluoroethane	28.0 (non-waste water)
☐	Waste 1,1,1 Trichloroethane	F002,	1, 1, 1 Trichloroethane	5.6 (non-waste water)
☐	Waste Petroleum Naphtha (Dry Cleaning)	D001, D039,	Ignitable Liquid (High TOC Subcategory) Tetrachloroethylene	INCIN, FSUBS, or RORGS (40 CFR 268.42) (non-waste water) Not Established
☐	Waste Paint Related Material	F003, F005, F003, F005, F003, F003, D001, D006, D007, D008,	Acetone Methyl Ethyl Ketone Methyl Isobutyl Ketone Toluene Xylene Methanol Ignitable Liquid (High TOC Subcategory) Cadmium Chromium Lead (TOC Subcategory)	160.0 (non-waste water) 36.0 (non-waste water) 33.0 (non-waste water) 28.0 (non-waste water) 28.0 (non-waste water) 0.75(non-waste water) INCIN, FSUBS, or RORGS (40 CFR 268.42) (non-waste water) 1.0 (non-waste water) 5.0 (non-waste water) 5.0 (non-waste water)
☐	Waste Antifreeze	D008, D039,	Lead Tetrachloroethylene	5.0 (non-waste water) Not Established

The constituent composition is based on knowledge of the waste (via Material Safety Data Sheets for the chemical(s) used, and the process which created the waste). These treatment standards do not preclude reclamation prior to final disposition.

Generator Company: SAFETY KLEEN CORP

EPA ID NO.: FLD984171694

NOTICE OF LAND DISPOSAL RESTRICTION OF WASTE

SAFETY-KLEEN CORP.
(DESIGNATED FACILITY)

EPA ID NO. FLD984908202
(DESIGNATED FACILITY)

ADDRESS: 130-A FRONTAGE RD LEXINGTON SC 29073

Under manifest number 11168, the generator noted below is shipping to you a waste determined to be restricted under 40 CFR Part 268. In accordance with 40 CFR Part 268.7, the generator hereby provides notice that the waste is restricted from land disposal. A copy of this form must be kept by the generator and facility for five (5) years from the date of waste shipment.

Missing 11-30-94

PLEASE CHECK THE APPROPRIATE BOXES

✓	WASTE NAME	EPA* WASTE CODE	THE WASTE MAY CONTAIN THE FOLLOWING RESTRICTED CONSTITUENTS	TREATMENT STANDARD (mg/l) OR METHOD (FOR NON-WASTE WATER)
☐	Waste Petroleum Naphtha (105)	D001, D018, D022, D035, D039,	Ignitable Liquid (High TOC Subcategory) Halogenated Organic Compounds (HOCs) ≥ 1000 mg/l Benzene Tetrachloroethylene	INCIN (40 CFR 268.42) (non-waste water) Not Established
☐	Waste Petroleum Naphtha (140)	D001, D006, D007, D008, D039,	Ignitable Liquid (High TOC Subcategory) Cadmium Chromium Lead Tetrachloroethylene	INCIN, FSUBS, or RORGS (40 CFR 268.42) (non-waste water) Not Established 1.0 (non-waste water) 5.0 (non-waste water) 5.0 (non-waste water)
☐	Waste Petroleum Naphtha (Sludge) from Safety-Kleen Service Center Operations)	D001, D006, D007, D008, D018, D021, D027, D039, D040,	Ignitable Liquid (High TOC Subcategory) HOCs ≥ 1000 mg/l Cadmium Chromium Lead Benzene Chlorobenzene 1,4-Dichlorobenzene Tetrachloroethylene Trichloroethylene	Not Established INCIN (40 CFR 268.42) (non-waste water) 5.0 (non-waste water) 5.0 (non-waste water) Not Established Not Established Not Established Not Established
☑	Waste Perchloroethylene	F002, D007	Tetrachloroethylene CHROMIUM	5.6 (non-waste water) 5.0 (NON-WASTEWATER)
☑	Waste Perc. Filters This hazardous debris is subject to the alternative treatment standards of 40CFR 268.45.	F002,	Tetrachloroethylene	5.6 (non-waste water)
☐	Waste Trichlorotrifluoroethane	F002,	Trichlorotrifluoroethane	28.0 (non-waste water)
☐	Waste 1,1,1 Trichloroethane	F002,	1, 1, 1 Trichloroethane	5.6 (non-waste water)
☐	Waste Petroleum Naphtha (Dry Cleaning)	D001, D039,	Ignitable Liquid (High TOC Subcategory) Tetrachloroethylene	INCIN, FSUBS, or RORGS (40 CFR 268.42) (non-waste water) Not Established
☐	Waste Paint Related Material	F003, F005, F003, F005, F003, F003, D001, D006, D007, D008,	Acetone Methyl Ethyl Ketone Methyl Isobutyl Ketone Toluene Xylene Methanol Ignitable Liquid (High TOC Subcategory) Cadmium Chromium Lead (TOC Subcategory)	160.0 (non-waste water) 36.0 (non-waste water) 33.0 (non-waste water) 28.0 (non-waste water) 28.0 (non-waste water) 0.75 (non-waste water) INCIN, FSUBS, or RORGS (40 CFR 268.42) (non-waste water) [illegible] 5.0 (non-waste water)
☐	Waste Antifreeze	D008, D039,	Lead Tetrachloroethylene	5.0 (non-waste water) 5.0 (non-waste water) Not Established

The constituent composition is based on knowledge of the waste (via Material Safety Data Sheets for the chemical(s) used, and the process which created the waste).

* These treatment standards do not preclude reclamation prior to final disposition.

Generator Company: SAFETY KLEEN CORP

EPA ID NO.: FLD984171694

Printed Name

NOTICE OF LAND DISPOSAL RESTRICTION OF WASTE

SAFETY-KLEEN CORP.
(DESIGNATED FACILITY)

EPA ID NO. ILD984908202
(DESIGNATED FACILITY)

ADDRESS: 130-A FRONTAGE RD LEXINGTON SC 29073

Under manifest number 11161. Missing 11-30-94, the generator noted below is shipping to you a waste determined to be restricted under 40 CFR Part 268. In accordance with 40 CFR Part 268.7, the generator hereby provides notice that the waste is restricted from land disposal. A copy of this form must be kept by the generator and facility for five (5) years from the date of waste shipment.

PLEASE CHECK THE APPROPRIATE BOXES

✓	WASTE NAME	EPA* WASTE CODE	THE WASTE MAY CONTAIN THE FOLLOWING RESTRICTED CONSTITUENTS	TREATMENT STANDARD (mg/l) OR METHOD (FOR NON-WASTE WATER)
☐	Waste Petroleum Naphtha (105)	D001, D018, D039,	Ignitable Liquid (High TOC Subcategory) Halogenated Organic Compounds (HOC's) ≥ 1000 mg/l Benzene Tetrachloroethylene	Incineration (INCIN), fuel substitution (FSUBS) or recovery (RORGS) (40 CFR 268.42) (non-waste water) INCIN (40 CFR 268.42) (non-waste water) Not Established Not Established
☒	Waste Petroleum Naphtha (140)	D001	Ignitable Liquid (High TOC Subcategory)	INCIN, FSUBS, or RORGS (40 CFR 268.42) (non-waste water)
☐	Waste Petroleum Naphtha (sludges from Safety-Kleen Service Center Operations)	D001, D006, D007, D008, D039,	All of the above, plus: Cadmium Chromium Lead Tetrachloroethylene	1.0 (non-waste water) 5.0 (non-waste water) 5.0 (non-waste water) Not Established
☐	Waste Compound Cleaning Liquid/ Immersion Cleaner 6[illegible]	D006, D007, D008, D018, D021, D027, D039, D040,	HOC's ≥ 1000 mg/l Cadmium Chromium Lead Benzene Chlorobenzene 1,4-Dichlorobenzene Tetrachloroethylene Trichloroethylene	INCIN (40 CFR 268.42) (non-waste water) 1.0 (non-waste water) 5.0 (non-waste water) 5.0 (non-waste water) Not Established Not Established Not Established Not Established Not Established
☑	Waste Perchloroethylene	F002, D007	Tetrachloroethylene CHROMIUM	5.6 (non-waste water) 5.0 (NON-WASTEWATER)
☑	Waste Perc. Filters This hazardous debris is subject to the alternative treatment standards of 40CFR 268.45.	F002,	Tetrachloroethylene	5.6 (non-waste water)
☐	Waste Trichlorotrifluoroethane	F002,	Trichlorotrifluoroethane	28.0 (non-waste water)
☐	Waste 1,1,1 Trichloroethane	F002,	1, 1, 1 Trichloroethane	5.6 (non-waste water)
☐	Waste Petroleum Naphtha (Dry Cleaning)	D001, D039,	Ignitable Liquid (High TOC Subcategory) Tetrachloroethylene	INCIN, FSUBS, or RORGS (40 CFR 268.42) (non-waste water) Not Established
☐	Waste Paint Related Material	F003, F005, F003, F005, F003, F003, D001, D006, D007, D008,	Acetone Methyl Ethyl Ketone Methyl Isobutyl Ketone Toluene Xylene Methanol Ignitable Liquid (High TOC Subcategory) Cadmium Chromium Lead (TOC Subcategory)	160.0 (non-waste water) 36.0 (non-waste water) 33.0 (non-waste water) 28.0 (non-waste water) 28.0 (non-waste water) 0.75 (non-waste water) INCIN, FSUBS, or RORGS (40 CFR 268.42) (non-waste water) 1.0 (non-waste water) 5.0 (non-waste water) 5.0 (non-waste water)
☐	Waste Antifreeze	D008, D039,	Lead Tetrachloroethylene	5.0 (non-waste water) Not Established

*The constituent composition is based on knowledge of the waste (via Material Safety Data Sheets for the chemical(s) used, and the process which created the waste). These treatment standards do not preclude reclamation prior to final disposition.

Generator Company: SAFETY KLEEN CORP

EPA ID NO.: FLD984171694

Printed Name and Title of Generator:

Safety-Kleen Corp. manages the above waste through its recycling and ...

A. State Manifest Document Number

B. State Generator's ID

NOTICE OF LAND DISPOSAL RESTRICTION OF WASTE

FETY-KLEEN CORP.
(DESIGNATED FACILITY)

EPA ID NO. ILD984908202
(DESIGNATED FACILITY)

DRESS: 130-A FRONTAGE RD LEXINGTON SC 29073

Under manifest/sales service number 11167. Missing 11-30-94
the generator noted below is shipping to you a waste determined to be restricted under 40 CFR Part 268. In accordance with 40 CFR Part 268.7, the generator hereby provides notice that the waste is restricted from land disposal. A copy of this form must be kept by the generator and facility for five (5) years from the date of waste shipment.

✓	WASTE NAME	EPA * WASTE CODE	THE WASTE MAY CONTAIN THE FOLLOWING RESTRICTED CONSTITUENTS	TREATMENT STANDARD (mg/l) OR METHOD (FOR NON-WASTE WATER)
PLEASE CHECK THE APPROPRIATE BOXES	☒ Waste Petroleum Naphtha	D001	Ignitable Liquid (High TOC Subcategory)	INCIN, FSUBS, or RORGS (40 CFR 268.42) (non-waste water)
		D016	Benzene	Not Established
		D039	Tetrachloroethylene	Not Established
	☒ Waste Petroleum Naphtha	D001	Ignitable Liquid (High TOC Subcategory)	INCIN, FSUBS, or RORGS (40 CFR 268.42) (non-waste water)
	☒ Waste Petroleum Naphtha (Sludge from Safety-Kleen Service Center Operations)	D001, D006, D008, D039	All of the above, plus: Cadmium, Lead, Tetrachloroethylene	1.0 (non-waste water) 5.0 (non-waste water) Not Established
	☒ Waste Compound Cleaning Liquid Immersion Heater #99	D006, D007, D008, D018, D020, D027, D030, D040	Cadmium, Cadmium, Lead, Benzene, Chlorobenzene, 1,4-Dichlorobenzene, Tetrachloroethylene, Trichloroethylene	INCIN (40 CFR 268.42) (non-waste water) 5.0 (non-waste water) 5.0 (non-waste water) 5.0 (non-waste water) Not Established Not Established Not Established Not Established Not Established
	☒ Waste Perchloroethylene	F002, D007	Tetrachloroethylene CHROMIUM	5.6 (non-waste water) 5.0 (NON-WASTE WATER)
	☒ Waste Perc. Filters This hazardous debris is subject to the alternative treatment standards of 40CFR 268.45.	F002,	Tetrachloroethylene	5.6 (non-waste water)
	☐ Waste Trichlorotrifluoroethane	F002,	Trichlorotrifluoroethane	28.0 (non-waste water)
	☐ Waste 1,1,1 Trichloroethane	F002,	1, 1, 1 Trichloroethane	5.6 (non-waste water)
	☐ Waste Petroleum Naphtha (Dry Cleaning)	D001, D039,	Ignitable Liquid (High TOC Subcategory) Tetrachloroethylene	INCIN, FSUBS, or RORGS (40 CFR 268.42) (non-waste wat Not Established
	☐ Waste Paint Related Material	F003, F005, F003, F005, F003, F003, D001, D006, D007, D008,	Acetone, Methyl Ethyl Ketone, Methyl Isobutyl Ketone, Toluene, Xylene, Methanol, Ignitable Liquid (High TOC Subcategory), Cadmium, Chromium, Lead (TOC Subcategory)	160.0 (non-waste water) 36.0 (non-waste water) 33.0 (non-waste water) 28.0 (non-waste water) 28.0 (non-waste water) 0.75(non-waste water) INCIN, FSUBS, or RORGS (40 CFR 268.42) (non-waste wat 1.0 (non-waste water) 5.0 (non-waste water) 5.0 (non-waste water)
	☐ Waste Antifreeze	D008, D039,	Lead, Tetrachloroethylene	5.0 (non-waste water) Not Established

The constituent composition is based on knowledge of the waste (via Material Safety Data Sheets for the chemical(s) used, and the process which created the waste).
*These treatment standards do not preclude reclamation prior to final disposition.

SAFETY KLEEN CORP.

NOTICE OF LAND DISPOSAL RESTRICTION OF WASTE

EPA ID NO. IL0984908202
(DESIGNATED FACILITY)

...LEEN CORP.
...NATED FACILITY)

130-A FRONTAGE RD LEXINGTON SC 29073

Under manifest/sales service number 11166 Missing 11-30-94
the generator noted below is shipping to you a waste determined to be restricted under 40 CFR Part 268. In accordance with 40 CFR Part 268.7, the generator hereby provides notice that the waste is restricted from land disposal. A copy of this form must be kept by the generator and facility for five (5) years from the date of waste shipment.

WASTE NAME	EPA * WASTE CODE	THE WASTE MAY CONTAIN THE FOLLOWING RESTRICTED CONSTITUENTS	TREATMENT STANDARD (mg/l) OR METHOD (FOR NON-WASTE WATER)
☒ Waste Perchloroethylene	F002, D007	Tetrachloroethylene CHROMIUM	5.6 (non-waste water) 5.0 (NON-WASTE WATER)
☐ Waste Perc. Filters This hazardous debris is subject to the alternative treatment standards of 40CFR 268.45.	F002,	Tetrachloroethylene	5.6 (non-waste water)
☐ Waste Trichlorotrifluoroethane	F002,	Trichlorotrifluoroethane	28.0 (non-waste water)
☐ Waste 1,1,1 Trichloroethane	F002,	1, 1, 1 Trichloroethane	5.6 (non-waste water)
☐ Waste Petroleum Naphtha (Dry Cleaning)	D001, D039,	Ignitable Liquid (High TOC Subcategory) Tetrachloroethylene	INCIN, FSUBS, or RORGS (40 CFR 268.42) (non-waste water) Not Established
☐ Waste Paint Related Material	F003, F005, F003, F005, F003, F003, D001, D006, D007, D008,	Acetone Methyl Ethyl Ketone Methyl Isobutyl Ketone Toluene Xylene Methanol Ignitable Liquid (High TOC Subcategory) Cadmium Chromium Lead (TOC Subcategory)	160.0 (non-waste water) 36.0 (non-waste water) 33.0 (non-waste water) 28.0 (non-waste water) 28.0 (non-waste water) 0.75(non-waste water) INCIN, FSUBS, or RORGS (40 CFR 268.42) (non-waste water) 1.0 (non-waste water) 5.0 (non-waste water) 5.0 (non-waste water)
☐ Waste Antifreeze	D008, D039,	Lead Tetrachloroethylene	5.0 (non-waste water) Not Established

The constituent composition is based on knowledge of the waste (via Material Safety Data Sheets for the chemical(s) used, and the process which created the waste).
* These treatment standards do not preclude reclamation prior to final disposition.

Generator Company: SAFETY KLEEN CORP EPA ID NO.: FL0984171694

INDICATE APPROPRIATE BOXES

NOTICE OF LAND DISPOSAL RESTRICTION OF WASTE

[illegible]KLEEN CORP.
[illegible]SIGNATED FACILITY)

EPA ID NO. ILD984908202
(DESIGNATED FACILITY)

[illegible]RESS: 130-A FRONTAGE RD LEXINGTON SC 29073

Under manifest/sales service number 11165. Missing 11-30-94
the generator noted below is shipping to you a waste determined to be restricted under 40 CFR Part 268. In accordance with 40 CFR Part 268.7, the generator hereby provides notice that the waste is restricted from land disposal. A copy of this form must be kept by the generator and facility for five (5) years from the date of waste shipment.

PLEASE CHECK THE APPROPRIATE BOXES

✓	WASTE NAME	EPA * WASTE CODE	THE WASTE MAY CONTAIN THE FOLLOWING RESTRICTED CONSTITUENTS	TREATMENT STANDARD (mg/l) OR METHOD (FOR NON-WASTE WATER)
[illegible]				
☒	Waste Perchloroethylene	F002, D007	Tetrachloroethylene CHROMIUM	5.6 (non-waste water) 5.0 (NON-WASTE WATER)
☒	Waste Perc. Filters This hazardous debris is subject to the alternative treatment standards of 40CFR 268.45.	F002,	Tetrachloroethylene	5.6 (non-waste water)
☐	Waste Trichlorotrifluoroethane	F002,	Trichlorotrifluoroethane	28.0 (non-waste water)
☐	Waste 1,1,1 Trichloroethane	F002,	1, 1, 1 Trichloroethane	5.6 (non-waste water)
☐	Waste Petroleum Naphtha (Dry Cleaning)	D001, D039,	Ignitable Liquid (High TOC Subcategory) Tetrachloroethylene	NCIN, FSUBS, or RORGS (40 CFR 268.42) (non-waste wate Not Established
☐	Waste Paint Related Material	F003, F005, F003, F005, F003, F003, D001, D006, D007, D008,	Acetone Methyl Ethyl Ketone Methyl Isobutyl Ketone Toluene Xylene Methanol Ignitable Liquid (High TOC Subcategory) Cadmium Chromium Lead (TOC Subcategory)	160.0 (non-waste water) 36.0 (non-waste water) 33.0 (non-waste water) 28.0 (non-waste water) 28.0 (non-waste water) 0.75(non-waste water) NCIN, FSUBS, or RORGS (40 CFR 268.42) (non-waste water [illegible] (non-waste water) 5.0 (non-waste water)
☐	Waste Antifreeze	D008, D039,	Lead Tetrachloroethylene	5.0 (non-waste water) 5.0 (non-waste water) Not Established

The constituent composition is based on knowledge of the waste (via Material Safety Data Sheets for the chemical(s) used, and the process which created the waste).
*These treatment standards do not preclude reclamation prior to final disposition.

Generator Company: SAFETY KLEEN CORP

EPA ID NO.: FLD984171694

9/88 [DHEC 1988 (REV 5/89)] ...ication Number, please con... ...ion number and the uni... ...s transporters of... ...dous waste in... ...ontinuation... ...is of ha... ...42

NOTICE OF LAND DISPOSAL RESTRICTION OF WASTE

...ETY-KLEEN CORP.
(DESIGNATED FACILITY)

EPA ID NO. ILD984908202
(DESIGNATED FACILITY)

...RESS: 130-A FRONTAGE RD LEXINGTON SC 29073

Under manifest/sales service number 11162 missing on 11-30-94,
the generator noted below is shipping to you a waste determined to be restricted under 40 CFR Part 268. In accordance with 40 CFR Part 268.7, the generator hereby provides notice that the waste is restricted from land disposal. A copy of this form must be kept by the generator and facility for five (5) years from the date of waste shipment.

PLEASE CHECK THE APPROPRIATE BOXES

✓	WASTE NAME	EPA * WASTE CODE	THE WASTE MAY CONTAIN THE FOLLOWING RESTRICTED CONSTITUENTS	TREATMENT STANDARD (mg/l) OR METHOD (FOR NON-WASTE WATER)
☐	XXXX Waste Petroleum Naphtha XXXX	XXXX D001, D018, D039 XXXX	XXXX Ignitable Liquid (High TOC Subcategory) Halogenated Organic Compounds (HOCs) > 1000 mg/kg Benzene Tetrachloroethylene XXXX	XXXX [illegible] Not Established Not Established XXXX
☐	XXXX Waste Petroleum Naphtha XXXX	XXXX D001 XXXX	XXXX Ignitable Liquid (High TOC Subcategory) XXXX	XXXX INCN, FSUBS, or RORGS (40 CFR 268.42) (non-waste water) XXXX
☐	XXXX [illegible] (Safety-Kleen Service Center Operations) XXXX	XXXX D001, D006, D008, D039 XXXX	XXXX All of the above, plus: Cadmium Lead Tetrachloroethylene XXXX	XXXX 1.0 (non-waste water) 5.0 (non-waste water) Not Established XXXX
☐	XXXX [illegible] XXXX	XXXX D006, D007, D008, D018, D020, D027, D039, D040 XXXX	XXXX [illegible] Cadmium Chromium Lead Benzene Chlorobenzene 1,4-Dichlorobenzene Tetrachloroethylene Trichloroethylene XXXX	XXXX [illegible] (non-waste water) 1.0 (non-waste water) 5.0 (non-waste water) 5.0 (non-waste water) Not Established Not Established Not Established Not Established Not Established XXXX
☑	Waste Perchloroethylene	F002, D007	Tetrachloroethylene CHROMIUM	5.6 (non-waste water) 5.0 (NON-WASTE WATER)
☑	Waste Perc. Filters This hazardous debris is subject to the alternative treatment standards of 40CFR 268.45.	F002,	Tetrachloroethylene	5.6 (non-waste water)
☐	Waste Trichlorotrifluoroethane	F002,	Trichlorotrifluoroethane	28.0 (non-waste water)
☐	Waste 1,1,1 Trichloroethane	F002,	1, 1, 1 Trichloroethane	5.6 (non-waste water)
☐	Waste Petroleum Naphtha (Dry Cleaning)	D001, D039,	Ignitable Liquid (High TOC Subcategory) Tetrachloroethylene	INCIN, FSUBS, or RORGS (40 CFR 268.42) (non-waste water) Not Established
☐	Waste Paint Related Material	F003, F005, F003, F005, F003, F003, D001, XXXX D006, XXXX D007, XXXX D008,	Acetone Methyl Ethyl Ketone Methyl Isobutyl Ketone Toluene Xylene Methanol Ignitable Liquid (High TOC Subcategory) XXXX Cadmium XXXX XXXX Chromium XXXX Lead (TOC Subcategory)	160.0 (non-waste water) 36.0 (non-waste water) 33.0 (non-waste water) 28.0 (non-waste water) 28.0 (non-waste water) 0.75(non-waste water) INCIN, FSUBS, or RORGS (40 CFR 268.42) (non-waste water) XXXX 1.0 (non-waste water) XXXX XXXX 5.0 (non-waste water) XXXX 5.0 (non-waste water)
☐	Waste Antifreeze	D008, D039,	Lead Tetrachloroethylene	5.0 (non-waste water) Not Established

The constituent composition is based on knowledge of the waste (via Material Safety Data Sheets for the chemical(s) used, and the process which created the waste).
*These treatment standards do not preclude reclamation prior to final disposition.

Generator Company: SAFETY KLEEN CORP EPA ID NO.: FLD984171694

NOTICE OF LAND DISPOSAL RESTRICTION OF WASTE

EPA ID NO. IL0984908202
(DESIGNATED FACILITY)

TY-KLEEN CORP.
(DESIGNATED FACILITY)

ADDRESS: 130-A FRONTAGE RD LEXINGTON SC 29073

Under manifest/sales service number 49628. Missing 11-30-94
the generator noted below is shipping to you a waste determined to be restricted under 40 CFR Part 268. In accordance with 40 CFR Part 268.7, the generator hereby provides notice that the waste is restricted from land disposal. A copy of this form must be kept by the generator and facility for five (5) years from the date of waste shipment.

PLEASE CHECK THE APPROPRIATE BOXES

✓	WASTE NAME	EPA * WASTE CODE	THE WASTE MAY CONTAIN THE FOLLOWING RESTRICTED CONSTITUENTS	TREATMENT STANDARD (mg/l) OR METHOD (FOR NON-WASTE WATER)
☑	Waste Perchloroethylene	F002, D007	Tetrachloroethylene CHROMIUM	5.6 (non-waste water) 5.0 (NON-WASTE WATER)
☑	Waste Perc. Filters This hazardous debris is subject to the alternative treatment standards of 40CFR 268.45.	F002,	Tetrachloroethylene	5.6 (non-waste water)
☐	Waste Trichlorotrifluoroethane	F002,	Trichlorotrifluoroethane	28.0 (non-waste water)
☐	Waste 1,1,1 Trichloroethane	F002,	1, 1, 1 Trichloroethane	5.6 (non-waste water)
☐	Waste Petroleum Naphtha (Dry Cleaning)	D001, D039,	Ignitable Liquid (High TOC Subcategory) Tetrachloroethylene	INCIN, FSUBS, or RORGS (40 CFR 268.42)-(non-waste wa Not Established
☐	Waste Paint Related Material	F003, F005, F003, F005, F003, F003, D001, D006, D007, D008,	Acetone Methyl Ethyl Ketone Methyl Isobutyl Ketone Toluene Xylene Methanol Ignitable Liquid (High TOC Subcategory) Cadmium Chromium Lead (TOC Subcategory)	160.0 (non-waste water) 36.0 (non-waste water) 33.0 (non-waste water) 28.0 (non-waste water) 28.0 (non-waste water) 0.75(non-waste water) INCIN, FSUBS, or RORGS (40 CFR 268.42)-(non-waste w 4.0 (non-waste water) 5.0 (non-waste water) 5.0 (non-waste water)
☐	Waste Antifreeze	D008, D039,	Lead Tetrachloroethylene	5.0 (non-waste water) Not Established

The constituent composition is based on knowledge of the waste (via Material Safety Data Sheets for the chemical(s) used, and the process which created the waste).
*These treatment standards do not preclude reclamation prior to final disposition.

Generator Company: SAFETY KLEEN CORP

EPA ID NO.: FLD984171694

NOTICE OF LAND DISPOSAL RESTRICTION OF WASTE

...TY-KLEEN CORP.
...ESIGNATED FACILITY)

EPA ID NO. IL0984908202
(DESIGNATED FACILITY)

...SS: 130-A FRONTAGE RD LEXINGTON SC 29073

Under manifest/sales service number 81294 Missing on 11-30-94
the generator noted below is shipping to you a waste determined to be restricted under 40 CFR Part 268. In accordance with 40 CFR Part 268.7, the generator hereby provides notice that the waste is restricted from land disposal. A copy of this form must be kept by the generator and facility for five (5) years from the date of waste shipment.

PLEASE CHECK THE APPROPRIATE BOXES

✓	WASTE NAME	EPA * WASTE CODE	THE WASTE MAY CONTAIN THE FOLLOWING RESTRICTED CONSTITUENTS	TREATMENT STANDARD (mg/l) OR METHOD (FOR NON-WASTE WATER)
☒	Waste Perchloroethylene	F002, D007	Tetrachloroethylene CHROMIUM	5.6 (non-waste water) 5.0 (NON-WASTE WATER)
☑	Waste Perc. Filters This hazardous debris is subject to the alternative treatment standards of 40CFR 268.45.	F002,	Tetrachloroethylene	5.6 (non-waste water)
☐	Waste Trichlorotrifluoroethane	F002,	Trichlorotrifluoroethane	28.0 (non-waste water)
☐	Waste 1,1,1 Trichloroethane	F002,	1, 1, 1 Trichloroethane	5.6 (non-waste water)
☐	Waste Petroleum Naphtha (Dry Cleaning)	D001, D039,	Ignitable Liquid (High TOC Subcategory) Tetrachloroethylene	INCIN, FSUBS, or RORGS (40 CFR 268.42) (non-waste water) Not Established
☐	Waste Paint Related Material	F003, F005, F003, F005, F003, F003, D001, D006, D007, D006,	Acetone Methyl Ethyl Ketone Methyl Isobutyl Ketone Toluene Xylene Methanol Ignitable Liquid (High TOC Subcategory) Cadmium Chromium Lead (TOC Subcategory)	160.0 (non-waste water) 36.0 (non-waste water) 33.0 (non-waste water) 28.0 (non-waste water) 28.0 (non-waste water) 0.75(non-waste water) INCIN, FSUBS, or RORGS (40 CFR 268.42) (non-waste water) 1.0 (non-waste water) 5.0 (non-waste water) 5.0 (non-waste water)
☐	Waste Antifreeze	D008, D039,	Lead Tetrachloroethylene	5.0 (non-waste water) Not Established

The constituent composition is based on knowledge of the waste (via Material Safety Data Sheets for the chemical(s) used, and the process which created the waste).
* These treatment standards do not preclude reclamation prior to final disposition.

Generator Company: SAFETY KLEEN EPA ID NO.: FL0984171694

COPIE

7-42

NOTICE OF LAND DISPOSAL RESTRICTION OF WASTE

SAFETY-KLEEN CORP.
(DESIGNATED FACILITY)

EPA ID NO. IL0984908202
(DESIGNATED FACILITY)

ADDRESS: 130-A FRONTAGE RD LEXINGTON SC 29073

Under manifest/sales service number 94927. missing on 11-30-94
the generator noted below is shipping to you a waste determined to be restricted under 40 CFR Part 268. In accordance with 40 CFR Part 268.7, the generator hereby provides notice that the waste is restricted from land disposal. A copy of this form must be kept by the generator and facility for five (5) years from the date of waste shipment.

PLEASE CHECK THE APPROPRIATE BOXES

✓	WASTE NAME	EPA * WASTE CODE	THE WASTE MAY CONTAIN THE FOLLOWING RESTRICTED CONSTITUENTS	TREATMENT STANDARD (mg/l) OR METHOD (FOR NON-WASTE WATER)
☐	Waste Perchloroethylene	F002, D007	Tetrachloroethylene CHROMIUM	5.6 (non-waste water) 5.0 (NON-WASTE WATER)
☐	Waste Perc. Filters This hazardous debris is subject to the alternative treatment standards of 40CFR 268.45.	F002,	Tetrachloroethylene	5.6 (non-waste water)
☐	Waste Trichlorotrifluoroethane	F002,	Trichlorotrifluoroethane	28.0 (non-waste water)
☐	Waste 1,1,1 Trichloroethane	F002,	1, 1, 1 Trichloroethane	5.6 (non-waste water)
☐	Waste Petroleum Naphtha (Dry Cleaning)	D001, D039,	Ignitable Liquid (High TOC Subcategory) Tetrachloroethylene	INCIN, FSUBS, or RORGS (40 CFR 268.42) (non-waste water) Not Established
☐	Waste Paint Related Material	F003, F005, F003, F005, F003, F003, D001, D006, D007, D008,	Acetone Methyl Ethyl Ketone Methyl Isobutyl Ketone Toluene Xylene Methanol Ignitable Liquid (High TOC Subcategory) Cadmium Chromium Lead (TOC Subcategory)	160.0 (non-waste water) 36.0 (non-waste water) 33.0 (non-waste water) 28.0 (non-waste water) 28.0 (non-waste water) 0.75(non-waste water) INCIN, FSUBS, or RORGS (40 CFR 268.42) (non-waste water) 1.0 (non-waste water) 5.0 (non-waste water)
☐	Waste Antifreeze	D008, D039,	Lead Tetrachloroethylene	5.0 (non-waste water) Not Established

The constituent composition is based on knowledge of the waste (via Material Safety Data Sheets for the chemical(s) used, and the process which created the waste).
* These treatment standards do not preclude reclamation prior to final disposition.

Generator Company: SAFETY KLEEN

EPA ID NO.: FL0984171694

-42

NOTICE OF LAND DISPOSAL RESTRICTION OF WASTE

ETY-KLEEN CORP.
(DESIGNATED FACILITY)

EPA ID NO. IL0984908202
(DESIGNATED FACILITY)

RESS: 130-A FRONTAGE RD LEXINGTON SC 29073

Under manifest/sales service number 25794. missing on 11-30-94
the generator noted below is shipping to you a waste determined to be restricted under 40 CFR Part 268. In accordance with 40 CFR Part 268.7, the generator hereby provides notice that the waste is restricted from land disposal. A copy of this form must be kept by the generator and facility for five (5) years from the date of waste shipment.

PLEASE CHECK THE APPROPRIATE BOXES

✓	WASTE NAME	EPA * WASTE CODE	THE WASTE MAY CONTAIN THE FOLLOWING RESTRICTED CONSTITUENTS	TREATMENT STANDARD (mg/l) OR METHOD (FOR NON-WASTE WATER)
☐	Waste Perchloroethylene	F002, D007	Tetrachloroethylene CHROMIUM	5.6 (non-waste water) 5.0 (NON-WASTE WATER)
☑	Waste Perc. Filters This hazardous debris is subject to the alternative treatment standards of 40CFR 268.45.	F002,	Tetrachloroethylene	5.6 (non-waste water)
☐	Waste Trichlorotrifluoroethane	F002,	Trichlorotrifluoroethane	28.0 (non-waste water)
☐	Waste 1,1,1 Trichloroethane	F002,	1, 1, 1 Trichloroethane	5.6 (non-waste water)
☐	Waste Petroleum Naphtha (Dry Cleaning)	D001, D039,	Ignitable Liquid (High TOC Subcategory) Tetrachloroethylene	INCIN, FSUBS, or RORGS (40 CFR 268.42) (non-waste wat Not Established
☐	Waste Paint Related Material	F003, F005, F003, F005, F003, F003, D001, D006, D007, D008,	Acetone Methyl Ethyl Ketone Methyl Isobutyl Ketone Toluene Xylene Methanol Ignitable Liquid (High TOC Subcategory) Cadmium Chromium Lead (TOC Subcategory)	160.0 (non-waste water) 36.0 (non-waste water) 33.0 (non-waste water) 28.0 (non-waste water) 28.0 (non-waste water) 0.75(non-waste water) INCIN, FSUBS, or RORGS (40 CFR 268.42) (non-waste wat 1.0 (non-waste water) 5.0 (non-waste water) 5.0 (non-waste water)
☐	Waste Antifreeze	D008, D039,	Lead Tetrachloroethylene	5.0 (non-waste water) Not Established

The constituent composition is based on knowledge of the waste (via Material Safety Data Sheets for the chemical(s) used, and the process which created the waste).
* These treatment standards do not preclude reclamation prior to final disposition.

Generator Company: SAFETY KLEEN CORP

EPA ID NO.: FL0984171694

NOTICE OF LAND DISPOSAL RESTRICTION OF WASTE

...lors o...
...ontinuation...
...dous waste...
...ransporters...
...umber and the unique...
...n Number, please contact...
...EC 1988 (REV 5/89)] plus the...

...-KLEEN CORP.
...ESIGNATED FACILITY)

EPA ID NO. IL0984908202
(DESIGNATED FACILITY)

...DRESS: 130 A FRONTAGE RD LEXINGTON SC 29073

Under manifest/sales service number 4 9017 Missing on 11-30-94
the generator noted below is shipping to you a waste determined to be restricted under 40 CFR Part 268. In accordance with 40 CFR Part 268.7, the generator hereby provides notice that the waste is restricted from land disposal. A copy of this form must be kept by the generator and facility for five (5) years from the date of waste shipment.

PLEASE CHECK THE APPROPRIATE BOXES

✓	WASTE NAME	EPA * WASTE CODE	THE WASTE MAY CONTAIN THE FOLLOWING RESTRICTED CONSTITUENTS	TREATMENT STANDARD (mg/l) OR METHOD (FOR NON-WASTE WATER)
☒	Waste Perchloroethylene	F002, D007	Tetrachloroethylene CHROMIUM	5.6 (non-waste water) 5.0 (NON-WASTE WATER)
☒	Waste Perc. Filters This hazardous debris is subject to the alternative treatment standards of 40CFR 268.45.	F002,	Tetrachloroethylene	5.6 (non-waste water)
☐	Waste Trichlorotrifluoroethane	F002,	Trichlorotrifluoroethane	28.0 (non-waste water)
☐	Waste 1,1,1 Trichloroethane	F002,	1, 1, 1 Trichloroethane	5.6 (non-waste water)
☐	Waste Petroleum Naphtha (Dry Cleaning)	D001, D039,	Ignitable Liquid (High TOC Subcategory) Tetrachloroethylene	INCIN, FSUBS, or RORGS (40 CFR 268.42) (non-waste water) Not Established
☐	Waste Paint Related Material	F003, F005, F003, F005, F003, F003, D001, D006, D007, D008,	Acetone Methyl Ethyl Ketone Methyl Isobutyl Ketone Toluene Xylene Methanol Ignitable Liquid (High TOC Subcategory) Cadmium Chromium Lead (TOC Subcategory)	160.0 (non-waste water) 36.0 (non-waste water) 33.0 (non-waste water) 28.0 (non-waste water) 28.0 (non-waste water) 0.75(non-waste water) INCIN, FSUBS, or RORGS (40 CFR 268.42) (non-waste water) 5.0 (non-waste water) 5.0 (non-waste water)
☐	Waste Antifreeze	D008, D039,	Lead Tetrachloroethylene	5.0 (non-waste water) Not Established

...e constituent composition is based on knowledge of the waste (via Material Safety Data Sheets for the chemical(s) used, and the process which created the waste). These treatment standards do not preclude reclamation prior to final disposition.

...enerator Company: SAFETY KLEEN CORP

EPA ID NO.: FL0984171694

...fety-Kleen Corp. manages the above waste through its recycling and fuels programs in accordance with all applicable ...

-42

FETY-KLEEN CORP.
(DESIGNATED FACILITY)

NOTICE OF LAND DISPOSAL RESTRICTION OF WASTE

EPA ID NO. ILD984908202
(DESIGNATED FACILITY)

DRESS: 130 A FRONTAGE RD LEXINGTON SC 29073

Under manifest/sales service number 07594 Missing on 11-30-94
the generator noted below is shipping to you a waste determined to be restricted under 40 CFR Part 268. In accordance with 40 CFR Part 268.7, the generator hereby provides notice that the waste is restricted from land disposal. A copy of this form must be kept by the generator and facility for five (5) years from the date of waste shipment.

PLEASE CHECK THE APPROPRIATE BOXES

WASTE NAME	EPA * WASTE CODE	THE WASTE MAY CONTAIN THE FOLLOWING RESTRICTED CONSTITUENTS	TREATMENT STANDARD (mg/l) OR METHOD (FOR NON-WASTE WATER)
☐ Waste Petroleum Naphtha [crossed out]	D001, [illegible], D018, D039	Ignitable Liquid (High TOC Subcategory) Halogenated Organic Compounds (HOCs) > 1000 mg/l Benzene Tetrachloroethylene	Incineration (INCIN), Fuel Substitution (FSUBS) or Recovery (RORGS) (40 CFR 268.42) (non-waste water) INCIN (40 CFR 268.42) (non-waste water) Not Established Not Established
☐ Waste Petroleum Naphtha [crossed out]	D001	Ignitable Liquid (High TOC Subcategory)	INCIN, FSUBS, or RORGS (40 CFR 268.42) (non-waste water)
☐ Waste Petroleum [illegible] Safety-Kleen Service Center Operations) [crossed out]	D001, D006, D008, D039	All of the above, plus: Cadmium Lead Tetrachloroethylene	1.0 (non-waste water) 5.0 (non-waste water) Not Established
☐ Waste [illegible] Cleaning [illegible] [crossed out]	[illegible], D006, D007, D008, D018, D021, D027, D039, D040	HOCs > 1000 mg/l Cadmium Chromium Lead Benzene Chlorobenzene 1,4-Dichlorobenzene Tetrachloroethylene Trichloroethylene	INCIN (40 CFR 268.42) (non-waste water) 1.0 (non-waste water) 5.0 (non-waste water) 5.0 (non-waste water) Not Established Not Established Not Established Not Established Not Established
☑ Waste Perchloroethylene	F002. D007	Tetrachloroethylene CHROMIUM	5.6 (non-waste water) 5.0 (NON-WASTE WATER)
☑ Waste Perc. Filters This hazardous debris is subject to the alternative treatment standards of 40CFR 268.45.	F002.	Tetrachloroethylene	5.6 (non-waste water)
☐ Waste Trichlorotrifluoroethane	F002.	Trichlorotrifluoroethane	28.0 (non-waste water)
☐ Waste 1,1,1 Trichloroethane	F002.	1, 1, 1 Trichloroethane	5.6 (non-waste water)
☐ Waste Petroleum Naphtha (Dry Cleaning)	D001, D039.	Ignitable Liquid (High TOC Subcategory) Tetrachloroethylene	INCN, FSUBS, or RORGS (40 CFR 268.42) (non-waste water) Not Established
☐ Waste Paint Related Material	F003, F005, F003. F005, F003, F003. D001. ~~D006.~~ ~~D007.~~ D008.	Acetone Methyl Ethyl Ketone Methyl Isobutyl Ketone Toluene Xylene Methanol Ignitable Liquid (High TOC Subcategory) ~~Cadmium~~ ~~Chromium~~ Lead (TOC Subcategory)	160.0 (non-waste water) 36.0 (non-waste water) 33.0 (non-waste water) 28.0 (non-waste water) 28.0 (non-waste water) 0.75(non-waste water) INCN, FSUBS, or RORGS (40 CFR 268.42) (non-waste water) ~~1.0 (non-waste water)~~ ~~5.0 (non-waste water)~~ 5.0 (non-waste water)
☐ Waste Antifreeze	D008. D039.	Lead Tetrachloroethylene	5.0 (non-waste water) Not Established

The constituent composition is based on knowledge of the waste (via Material Safety Data Sheets for the chemical(s) used, and the process which created the waste).
*These treatment standards do not preclude reclamation prior to final disposition.

Generator Company: SAFETY-KLEEN

EPA ID NO.: FL0984171694

NOTICE OF LAND DISPOSAL RESTRICTION OF WASTE

TO SAFETY-KLEEN CORP EPA ID NO TXD077003371

1722 COOPER CREEK ROAD DENTON TX 76208

Under manifest number 94086 ~~94457~~ line number 11A (enter 11a, 11b, 11c, OR 11d) the generator noted below is shipping to you a waste determined to be restricted under 40 CFR Part 268. In accordance with 40 CFR 268.7, the generator hereby provides notice that the waste is restricted and the EPA waste code and the appropriate treatment standards are as follows:

Missing on 11-30-94

EPA WASTE CODES:

F001-F005 Spent Solvents

TREATMENT STANDARDS (total mg/l except as noted by TCLP)

Regulated Hazardous Constituent	Wastewater W/Solvents	Check All That apply	All Other Solvent Wastes	Check All That Apply
Acetone	0.28	___	160	___
Benzene	0.07	___	3.7	___
N-Butyl alcohol	5.6	___	2.6	___
Carbon disulfide	0.014	___	4.8 TCLP	___
Carbon tetrachloride	0.057	___	5.6	___
Chlorobenzene	0.057	___	5.7	___
Cresol (m- and p-isomers)	0.77	___	3.2	___
o-Cresol	0.11	___	5.6	___
Cyclohexanone	0.36	___	0.75 TCLP	___
o-Dichlorobenzene	0.088	___	6.2	___
Ethyl acetate	0.34	___	33	___
Ethyl benzene	0.057	___	6.0	___
Ethyl ether	0.12	___	160	___
Isobutyl alcohol	5.6	___	170	___
Methanol	5.6	___	0.75 TCLP	___
Methylene chloride	0.089	___	33	___
Methylene chloride(from Pharm. Industry)	0.44	___	33	___
Methyl ethyl ketone	0.28	___	36	___
Methyl isobutyl ketone	0.14	___	33	___
Nitrobenzene	0.068	___	14	___
Pyridine	0.014	___	16	___
Tetrachloroethlyene	0.056	___	5.6	___
Toluene	0.08	___	28	___
1,1,1-Trichloroethane	0.054	___	5.6	___
1,1,2-Trichloroethane	0.03	___	7.5	___
1,1,2-Trichloro-1,2,2-trifluoroethane	0.057	___	28	___
Trichlorethylene	0.054	___	5.6	___
Trichloromonofluoromethane	0.02	___	33	___
Xylenes (total)	0.32	___	28	___

California List Prohibited Wastes	Level (mg/l)	Treatment Standard	
Halogenated Organic Compounds	1000.0	Incineration*	___
Nickel (Ni)	134.0	None	___
Thallium (Tl)	130.0	None	___
Chlorinated Biphenyls (PCB's)	50.0	Incineration	___

* These treatment standards do not preclude solvent recovery or use as fuel prior to land disposal.

Waste Descriptions and/or Treatment Subcategory

Treatment Standards Reference in 40 CFR and Technology Codes for 40 CFR 268.42(a) — Check All That Apply

Waste code	Description	Wastewaters		Nonwastewaters	
D001:	Wastewaters (<1.0 wt% TOC and TSS)	268.42(a) DEACT	___	NA	
	Low TOC Ignitable Liquids (<10 wt% TOC)	NA		268.42(a) DEACT	___
	High TOC Ignitable Liquids (>10 wt% TOC)	NA		268.42(a) RORGS, FSUBS, OR INCIN	___
D002	Corrosives, all subcategories & CA list	268.42(a) DEACT	___	268.42(a) DEACT	___
D004	Arsenic(As)	268.43(a)	___	268.41(a)	___
D005	Barium (Ba)	268.43(a)	___	268.41(a)	___
D006	Cadmium (Cd)	268.43(a)	___	268.41(a)	___
D007	Chromium (Cr)	268.43(a)	___	268.41(a)	X
D008	Lead (Pb)	268.43(a)	___	268.41(a)	___
D009:	Low Mercury Subcategory (<260 ppm Hg)	268.43(a)	___	268.41(a)	___
	High Mercury Subcategory (>=260 ppm Hg)	268.43(a)	___	268.42(a) HMERC	___
D010	Selenium (Se)	268.43(a)	___	268.41(a)	___
D011	Silver (Ag)	268.43(a)	___	268.41(a)	___
F005	2-Ethoxyethanol	268.42(a) INCIN*	___	268.42(a) INCIN*	___
F005	2-Nitropropane	268.42(a) INCIN*	___	268.42(a) INCIN*	___
Other Codes	See attachment for supplemental list		___		___

This hazardous debris is subject to the alternative treatment standards of 40 CFR 268.45 for the above contaminants that are subject to treatment. (Check if applicable) X

Generator Name: Safety Kleen FLD984171694

Generator Signature: Peter Ciocio Branch

Post-it® Fax Note 7671

Date 9-29	# of pages ▶ 1
To Serena	From MJ
Co./Dept.	Co. SK
Phone #	Phone #
	Fax #

DEC 1 94 12:41 FROM PAGE.005

-097-42

NOTICE OF LAND DISPOSAL RESTRICTION OF WASTE

TO: SAFETY-KLEEN CORP. (DESIGNATED FACILITY)

EPA ID NO. ILD984908202 (DESIGNATED FACILITY)

ADDRESS: 130-A FRONTAGE RD LEXINGTON SC 29073

Under manifest/sales service number 1164 Missing on 11-30-94 the generator noted below is shipping to you a waste determined to be restricted under 40 CFR Part 268. In accordance with 40 CFR Part 268.7, the generator hereby provides notice that the waste is restricted from land disposal. A copy of this form must be kept by the generator and facility for five (5) years from the date of waste shipment.

PLEASE CHECK THE APPROPRIATE BOXES

✓	WASTE NAME	EPA WASTE CODE	THE WASTE MAY CONTAIN THE FOLLOWING RESTRICTED CONSTITUENTS	TREATMENT STANDARD (mg/l) OR METHOD (FOR NON-WASTE WATER)
☒	Waste Perchloroethylene	F002, D007	Tetrachloroethylene CHROMIUM	5.6 (non-waste water) 5.0 (NON-WASTE WATER)
☒	Waste Perc. Filters This hazardous debris is subject to the alternative treatment standards of 40CFR 268.45.	F002.	Tetrachloroethylene	5.6 (non-waste water)
☐	Waste Trichlorotrifluoroethane	F002,	Trichlorotrifluoroethane	28.0 (non-waste water)
☐	Waste 1,1,1 Trichloroethane	F002,	1, 1, 1 Trichloroethane	5.6 (non-waste water)
☐	Waste Petroleum Naphtha (Dry Cleaning)	D001, D039,	Ignitable Liquid (High TOC Subcategory) Tetrachloroethylene	INCIN, FSUBS, or RORGS (40 CFR 268.42) (non-waste water) Not Established
☐	Waste Paint Related Material	F003, F005, F003, F005, F003, F003, D001, D006, D007, D008,	Acetone Methyl Ethyl Ketone Methyl Isobutyl Ketone Toluene Xylene Methanol Ignitable Liquid (High TOC Subcategory) Cadmium Chromium Lead (TOC Subcategory)	160.0 (non-waste water) 36.0 (non-waste water) 33.0 (non-waste water) 28.0 (non-waste water) 28.0 (non-waste water) 0.75(non-waste water) INCIN, FSUBS, or RORGS (40 CFR 268.42) (non-waste water) 5.6 (non-waste water) 5.0 (non-waste water)
☐	Waste Antifreeze	D008, D039,	Lead Tetrachloroethylene	5.0 (non-waste water) Not Established

The constituent composition is based on knowledge of the waste (via Material Safety Data Sheets for the chemical(s) used, and the process which created the waste). These treatment standards do not preclude reclamation prior to final disposition.

Generator Company: SAFETY KLEEN CORP EPA ID NO.: FLD984171694

IDHEC 1998 (REV 5/98) plus

NOTICE OF LAND DISPOSAL RESTRICTION OF WASTE

ETY-KLEEN CORP.
(DESIGNATED FACILITY)

EPA ID NO. IL0984908202
(DESIGNATED FACILITY)

DDRESS: 130-A FRONTAGE RD LEXINGTON SC 29073

Under manifest/sales service number 07189. Missing 11-30-94 the generator noted below is shipping to you a waste determined to be restricted under 40 CFR Part 268. In accordance with 40 CFR Part 268.7, the generator hereby provides notice that the waste is restricted from land disposal. A copy of this form must be kept by the generator and facility for five (5) years from the date of waste shipment.

PLEASE CHECK THE APPROPRIATE BOXES

✓	WASTE NAME	EPA * WASTE CODE	THE WASTE MAY CONTAIN THE FOLLOWING RESTRICTED CONSTITUENTS	TREATMENT STANDARD (mg/l) OR METHOD (FOR NON-WASTE WATER)
☑	Waste Perchloroethylene	F002, D007	Tetrachloroethylene CHROMIUM	5.6 (non-waste water) 5.0 (NON-WASTE WATER)
☑	Waste Perc. Filters This hazardous debris is subject to the alternative treatment standards of 40CFR 268.45.	F002,	Tetrachloroethylene	5.6 (non-waste water)
☐	Waste Trichlorotrifluoroethane	F002,	Trichlorotrifluoroethane	28.0 (non-waste water)
☐	Waste 1,1,1 Trichloroethane	F002,	1, 1, 1 Trichloroethane	5.6 (non-waste water)
☐	Waste Petroleum Naphtha (Dry Cleaning)	D001, D039,	Ignitable Liquid (High TOC Subcategory) Tetrachloroethylene	INCIN, FSUBS, or RORGS (40 CFR 268.42) (non-waste water) Not Established
☐	Waste Paint Related Material	F003, F005, F003, F005, F003, F003, D001, D006, D007, D008,	Acetone Methyl Ethyl Ketone Methyl Isobutyl Ketone Toluene Xylene Methanol Ignitable Liquid (High TOC Subcategory) Cadmium Chromium Lead (TOC Subcategory)	160.0 (non-waste water) 36.0 (non-waste water) 33.0 (non-waste water) 28.0 (non-waste water) 28.0 (non-waste water) 0.75(non-waste water) INCIN, FSUBS, or RORGS (40 CFR 268.42) (non-waste water) 1.0 (non-waste water) 5.0 (non-waste water) 5.0 (non-waste water)
☐	Waste Antifreeze	D008, D039,	Lead Tetrachloroethylene	5.0 (non-waste water) Not Established

The constituent composition is based on knowledge of the waste (via Material Safety Data Sheets for the chemical(s) used, and the process which created the waste).
*These treatment standards do not preclude reclamation prior to final disposition.

Generator Company: SAFETY-KLEEN EPA ID NO.: FL0984171694

3-097-42

NOTICE OF LAND DISPOSAL RESTRICTION OF WASTE

O: SAFETY-KLEEN CORP. (DESIGNATED FACILITY)

EPA ID NO. ILD984908202 (DESIGNATED FACILITY)

ADDRESS: 130-A FRONTAGE RD LEXINGTON SC 29073

Under manifest/sales service number 82435 We had already seen this one
the generator noted below is shipping to you a waste determined to be restricted under 40 CFR Part 268. In accordance with 40 CFR Part 268.7, the generator hereby provides notice that the waste is restricted from land disposal. A copy of this form must be kept by the generator and facility for five (5) years from the date of waste shipment.

PLEASE CHECK THE APPROPRIATE BOXES

✓	WASTE NAME	EPA WASTE CODE	THE WASTE MAY CONTAIN THE FOLLOWING RESTRICTED CONSTITUENTS	TREATMENT STANDARD (mg/l) OR METHOD (FOR NON-WASTE WATER)
☑	Waste Perchloroethylene	F002, D007	Tetrachloroethylene CHROMIUM	5.6 (non-waste water) 5.0 (NON-WASTE WATER)
☑	Waste Perc. Filters This hazardous debris is subject to the alternative treatment standards of 40 CFR 268.45.	F002,	Tetrachloroethylene	5.6 (non-waste water)
☐	Waste Trichlorotrifluoroethane	F002,	Trichlorotrifluoroethane	28.0 (non-waste water)
☐	Waste 1,1,1 Trichloroethane	F002,	1, 1, 1 Trichloroethane	5.6 (non-waste water)
☐	Waste Petroleum Naphtha (Dry Cleaning)	D001, D039,	Ignitable Liquid (High TOC Subcategory) Tetrachloroethylene	BNON, FSUBS, or RORGS (40 CFR 268.42) (non-waste water) Not Established
☐	Waste Paint Related Material	F005, F003, F005, F003, F003, D001, D007, D008,	Acetone Methyl Ethyl Ketone Methyl Isobutyl Ketone Toluene Xylene Methanol Ignitable Liquid (High TOC Subcategory) Chromium Lead (TOC Subcategory)	160.0 (non-waste water) 36.0 (non-waste water) 33.0 (non-waste water) 28.0 (non-waste water) 28.0 (non-waste water) 0.75(non-waste water) BNON, FSUBS, or RORGS (40 CFR 268.42) (non-waste water) 5.0 (non-waste water)
☐	Waste Antifreeze	D008, D039,	Lead Tetrachloroethylene	5.0 (non-waste water) 5.6 (non-waste water) Not Established

The constituent composition is based on knowledge of the waste (via Material Safety Data Sheets for the chemical(s) used, and the process which created the waste).
*These treatment standards do not preclude reclamation prior to final disposition.

Generator Company: SAFETY KLEEN CORP EPA ID NO.: FLD984171694

Safety-Kleen Corp. manages the above waste through its recycling and fuels programs in accordance with all applicable elements of the [illegible]

97-42

NOTICE OF LAND DISPOSAL RESTRICTION OF WASTE

SAFETY-KLEEN CORP.
(DESIGNATED FACILITY)

EPA ID NO. IL0984908202
(DESIGNATED FACILITY)

ADDRESS: 130-A FRONTAGE RD LEXINGTON SC 29073

Under manifest/sales service number 11171. This one was observed on 11-30-94 at SKM the generator noted below is shipping to you a waste determined to be restricted under 40 CFR Part 268. In accordance with 40 CFR Part 268.7, the generator hereby provides notice that the waste is restricted from land disposal. A copy of this form must be kept by the generator and facility for five (5) years from the date of waste shipment.

✓	WASTE NAME	EPA * WASTE CODE	THE WASTE MAY CONTAIN THE FOLLOWING RESTRICTED CONSTITUENTS	TREATMENT STANDARD (mg/l) OR METHOD (FOR NON-WASTE WATER)
☑	Waste Perchloroethylene	F002, D007	Tetrachloroethylene CHROMIUM	5.6 (non-waste water) 5.0 (NON-WASTE WATER)
☑	Waste Perc. Filters This hazardous debris is subject to the alternative treatment standards of 40CFR 268.45.	F002,	Tetrachloroethylene	5.6 (non-waste water)
☐	Waste Trichlorotrifluoroethane	F002,	Trichlorotrifluoroethane	28.0 (non-waste water)
☐	Waste 1,1,1 Trichloroethane	F002,	1, 1, 1 Trichloroethane	5.6 (non-waste water)
☐	Waste Petroleum Naphtha (Dry Cleaning)	D001, D039,	Ignitable Liquid (High TOC Subcategory) Tetrachloroethylene	INCIN, FSUBS, or RORGS (40 CFR 268.42) (non-waste water) Not Established
☐	Waste Paint Related Material	F003, F005, F003, F005, F003, F003, D001, D006, D007, D008,	Acetone Methyl Ethyl Ketone Methyl Isobutyl Ketone Toluene Xylene Methanol Ignitable Liquid (High TOC Subcategory) Cadmium Chromium Lead (TOC Subcategory)	160.0 (non-waste water) 36.0 (non-waste water) 33.0 (non-waste water) 28.0 (non-waste water) 28.0 (non-waste water) 0.75(non-waste water) INCIN, FSUBS, or RORGS (40 CFR 268.42) (non-waste water) 1.0 (non-waste water) 5.0 (non-waste water)
☐	Waste Antifreeze	D008, D039,	Lead Tetrachloroethylene	5.0 (non-waste water) Not Established

* Constituent composition is based on knowledge of the waste (via Material Safety Data Sheets for the chemical(s) used, and the process which created the waste). These treatment standards do not preclude reclamation prior to final disposition.

Generator Company: SAFETY KLEEN CORP

EPA ID NO.: FLD984171694

097-42

NOTICE OF LAND DISPOSAL RESTRICTION OF WASTE

EPA ID NO. IL0984908202
(DESIGNATED FACILITY)

O: SAFETY-KLEEN CORP.
(DESIGNATED FACILITY)

DDRESS: 130-A FRONTAGE RD LEXINGTON SC 29073

Under manifest/sales service number 11163. This one was seen on 11-30-94
the generator noted below is shipping to you a waste determined to be restricted under 40 CFR Part 268. In accordance with 40 CFR Part 268.7, the generator hereby provides notice that the waste is restricted from land disposal. A copy of this form must be kept by the generator and facility for five (5) years from the date of waste shipment.

PLEASE CHECK THE APPROPRIATE BOXES

✓	WASTE NAME	EPA * WASTE CODE	THE WASTE MAY CONTAIN THE FOLLOWING RESTRICTED CONSTITUENTS	TREATMENT STANDARD (mg/l) OR METHOD (FOR NON-WASTE WATER)
☒	Waste Perchloroethylene	F002, D007	Tetrachloroethylene CHROMIUM	5.6 (non-waste water) 5.0 (NON-WASTE WATER)
☒	Waste Perc. Filters This hazardous debris is subject to the alternative treatment standards of 40CFR 268.45.	F002,	Tetrachloroethylene	5.6 (non-waste water)
☐	Waste Trichlorotrifluoroethane	F002.	Trichlorotrifluoroethane	28.0 (non-waste water)
☐	Waste 1,1,1 Trichloroethane	F002,	1, 1, 1 Trichloroethane	5.6 (non-waste water)
☐	Waste Petroleum Naphtha (Dry Cleaning)	D001, D039,	Ignitable Liquid (High TOC Subcategory) Tetrachloroethylene	INCIN, FSUBS, or RORGS (40 CFR 268.42) (non-waste water) Not Established
☐	Waste Paint Related Material	F003, F005, F003, F005, F003, F003, D001, D006, D007, D008,	Acetone Methyl Ethyl Ketone Methyl Isobutyl Ketone Toluene Xylene Methanol Ignitable Liquid (High TOC Subcategory) Cadmium Chromium Lead (TOC Subcategory)	160.0 (non-waste water) 36.0 (non-waste water) 33.0 (non-waste water) 28.0 (non-waste water) 28.0 (non-waste water) 0.75(non-waste water) INCIN, FSUBS, or RORGS (40 CFR 268.42) (non-waste water) 1.0 (non-waste water) 5.0 (non-waste water) 5.0 (non-waste water)
☐	Waste Antifreeze	D008, D039,	Lead Tetrachloroethylene	5.0 (non-waste water) Not Established

The constituent composition is based on knowledge of the waste (via Material Safety Data Sheets for the chemical(s) used, and the process which created the waste).
* These treatment standards do not preclude reclamation prior to final disposition.

Generator Company: SAFETY KLEEN CORP EPA ID NO.: FL0984171694

** TOTAL PAGE.001 **

NOTICE OF LAND DISPOSAL RESTRICTION OF WASTE

SAFETY-KLEEN CORP.
(DESIGNATED FACILITY)

EPA ID NO. SCD077995488
(DESIGNATED FACILITY)

ADDRESS: 130-A FRONTAGE ROAD LEXINGTON, SC 29073

Under manifest/sales service number 62094 (Ref missing on 11-30-94) the generator noted below is shipping to you a waste determined to be restricted under 40 CFR Part 268. In accordance with 40 CFR Part 268.7, the generator hereby provides notice that the waste is restricted from land disposal. A copy of this form must be kept by the generator and facility for five (5) years from the date of waste shipment.

PLEASE CHECK THE APPROPRIATE BOXES

✓	WASTE NAME	EPA * WASTE CODE	THE WASTE MAY CONTAIN THE FOLLOWING RESTRICTED CONSTITUENTS	TREATMENT STANDARD (mg/l) OR METHOD (FOR NON-WASTE WATER)
☒	Waste Petroleum Naphtha	D001, D039,	Ignitable Liquid (High TOC Subcategory) Tetrachloroethylene	INCIN, FSUBS, or RORGS (40 CFR 268.42) (non-waste water) Not Established
☒	Waste Petroleum Naphtha	D001, D005, D006, D039,	Ignitable Liquid (High TOC Subcategory) All of the above plus: Barium Cadmium Lead Tetrachloroethylene	INCIN, FSUBS, or RORGS (40 CFR 268.42) (non-waste water) 1.0 (non-waste water) 0.75 (non-waste water) Not Established
☐	Waste Perchloroethylene	F002, D007	Tetrachloroethylene CHROMIUM	5.6 (non-waste water) 5.0 (NON-WASTE WATER)
☐	Waste Perc. Filters This hazardous debris is subject to the alternative treatment standards of 40CFR 268.45.	F002,	Tetrachloroethylene	5.6 (non-waste water)
☐	Waste Trichlorotrifluoroethane	F002,	Trichlorotrifluoroethane	28.0 (non-waste water)
☐	Waste 1,1,1 Trichloroethane	F002,	1, 1, 1 Trichloroethane	5.6 (non-waste water)
☐	Waste Petroleum Naphtha (Dry Cleaning)	D001, D039,	Ignitable Liquid (High TOC Subcategory) Tetrachloroethylene	INCIN, FSUBS, or RORGS (40 CFR 268.42) (non-waste water) Not Established
☒	Waste Paint Related Material	F003, F005, F003, F005, F003, F003, D001, D006, D007, D008,	Acetone Methyl Ethyl Ketone Methyl Isobutyl Ketone Toluene Xylene Methanol Ignitable Liquid (High TOC Subcategory) Cadmium Chromium Lead (TOC Subcategory)	160.0 (non-waste water) 36.0 (non-waste water) 33.0 (non-waste water) 28.0 (non-waste water) 28.0 (non-waste water) 0.75(non-waste water) INCIN, FSUBS, or RORGS (40 CFR 268.42) (non-waste water) 1.0 (non-waste water) 5.0 (non-waste water) 5.0 (non-waste water)
☐	Waste Antifreeze	D008, D039,	Lead Tetrachloroethylene	5.0 (non-waste water) Not Established

The constituent composition is based on knowledge of the waste (via Material Safety Data Sheets for the chemical(s) used, and the process which created the waste).
* These treatment standards do not preclude reclamation prior to final disposition.

Generator Company: SAFETY-KLEEN CORP. EPA ID NO.: FL0984171694

Safety-Kleen Corp. manages the above waste through its recycling and fuels

NOTICE OF LAND DISPOSAL RESTRICTION OF WASTE

EPA ID NO. ILD984908202
(DESIGNATED FACILITY)

TY-KLEEN CORP.
ESIGNATED FACILITY)

ADDRESS: 130-A FRONTAGE RD LEXINGTON SC 29073

Under manifest/sales service number 08594 Not Missing 11-30-94
the generator noted below is shipping to you a waste determined to be restricted under 40 CFR Part 268. In accordance with 40 CFR Part 268.7, the generator hereby provides notice that the waste is restricted from land disposal. A copy of this form must be kept by the generator and facility for five (5) years from the date of waste shipment.

PLEASE CHECK THE APPROPRIATE BOXES

✓	WASTE NAME	EPA * WASTE CODE	THE WASTE MAY CONTAIN THE FOLLOWING RESTRICTED CONSTITUENTS	TREATMENT STANDARD (mg/l) OR METHOD (FOR NON-WASTE WATER)
☒	Waste Perchloroethylene	F002, D007	Tetrachloroethylene CHROMIUM	5.6 (non-waste water) 5.0 (NON-WASTE WATER)
☒	Waste Perc. Filters This hazardous debris is subject to the alternative treatment standards of 40CFR 268.45.	F002,	Tetrachloroethylene	5.6 (non-waste water)
☐	Waste Trichlorotrifluoroethane	F002,	Trichlorotrifluoroethane	28.0 (non-waste water)
☐	Waste 1,1,1 Trichloroethane	F002,	1, 1, 1 Trichloroethane	5.6 (non-waste water)
☐	Waste Petroleum Naphtha (Dry Cleaning)	D001, D039,	Ignitable Liquid (High TOC Subcategory) Tetrachloroethylene	INCIN, FSUBS, or RORGS (40 CFR 268.42) (non-waste wate Not Established
☐	Waste Paint Related Material	F003, F005, F003, F005, F003, F003, D001, D005, D007, D008,	Acetone Methyl Ethyl Ketone Methyl Isobutyl Ketone Toluene Xylene Methanol Ignitable Liquid (High TOC Subcategory) Cadmium Chromium Lead (TOC Subcategory)	160.0 (non-waste water) 36.0 (non-waste water) 33.0 (non-waste water) 28.0 (non-waste water) 28.0 (non-waste water) 0.75(non-waste water) INCIN, FSUBS, or RORGS (40 CFR 268.42) (non-waste wate 1.2 (non-waste water) 5.0 (non-waste water)
☐	Waste Antifreeze	D008, D039,	Lead Tetrachloroethylene	5.0 (non-waste water) Not Established

The constituent composition is based on knowledge of the waste (via Material Safety Data Sheets for the chemical(s) used, and the process which created the waste).
*These treatment standards do not preclude reclamation prior to final disposition.

Generator Company: SAFETY KLEEN

EPA ID NO.: FLD984171694

Number 1-1a-1 [redacted] State Transporter's ID [redacted] Phone [redacted]

NOTICE OF LAND DISPOSAL RESTRICTION OF WASTE

[redacted]-KLEEN CORP.
(DESIGNATED FACILITY)

EPA ID NO. SCD077995488
(DESIGNATED FACILITY)

[redacted] 130-A FRONTAGE ROAD LEXINGTON, SC 29073

Under manifest/sales service number 49026. Not among the Missing the generator noted below is shipping to you a waste determined to be restricted under 40 CFR Part 268. In accordance with 40 CFR Part 268.7, the generator hereby provides notice that the waste is restricted from land disposal. A copy of this form must be kept by the generator and facility for five (5) years from the date of waste shipment.

PLEASE CHECK THE APPROPRIATE BOXES

✓	WASTE NAME	EPA * WASTE CODE	THE WASTE MAY CONTAIN THE FOLLOWING RESTRICTED CONSTITUENTS	TREATMENT STANDARD (mg/l) OR METHOD (FOR NON-WASTE WATER)
☑	Waste Perchloroethylene	F002, D007	Tetrachloroethylene CHROMIUM	5.6 (non-waste water) 5.0 (NON-WASTE WATER)
☑	Waste Perc. Filters This hazardous debris is subject to the alternative treatment standards of 40CFR 268.45.	F002,	Tetrachloroethylene	5.6 (non-waste water)
☐	Waste Trichlorotrifluoroethane	F002.	Trichlorotrifluoroethane	28.0 (non-waste water)
☐	Waste 1,1,1 Trichloroethane	F002,	1, 1, 1 Trichloroethane	5.6 (non-waste water)
☐	Waste Petroleum Naphtha (Dry Cleaning)	D001, D039,	Ignitable Liquid (High TOC Subcategory) Tetrachloroethylene	INCIN, FSUBS, or RORGS (40 CFR 268.42) (non-waste water) Not Established
☐	Waste Paint Related Material	F003, F005, F003, F005, F003, F003, D001, D006, D007, D008,	Acetone Methyl Ethyl Ketone Methyl Isobutyl Ketone Toluene Xylene Methanol Ignitable Liquid (High TOC Subcategory) Cadmium Chromium Lead (TOC Subcategory)	160.0 (non-waste water) 36.0 (non-waste water) 33.0 (non-waste water) 28.0 (non-waste water) 28.0 (non-waste water) 0.75(non-waste water) INCIN, FSUBS, or RORGS (40 CFR 268.42) (non-waste water) [redacted] (non-waste water) 5.0 (non-waste water)
☐	Waste Antifreeze	D008, D039,	Lead Tetrachloroethylene	5.0 (non-waste water) 5.0 (non-waste water) Not Established

* The constituent composition is based on knowledge of the waste (via Material Safety Data Sheets for the chemical(s) used, and the process which created the waste).
These treatment standards do not preclude reclamation prior to final disposition.

Generator Company: SAFETY-KLEEN CORP. EPA ID NO.: FLD984171694

Department of Environmental Protection

Lawton Chiles
Governor

Southeast District
P.O. Box 15425
West Palm Beach, Florida 33416

Virginia B. Wetherell
Secretary

HAZARDOUS WASTE INSPECTION REPORT

1. INSPECTION REPORT ___Complaint _X_Routine ___Follow-up _X_Permitting

FACILITY NAME Safety-Kleen/Medley DEP/EPA ID# FLD 984 171 694

ADDRESS 8755 Northwest 95th Street, Medley, Florida 33178

COUNTY Dade PHONE (305) 884-0123 DATE 11-30-94 TIME 9:35 am

TYPE OF FACILITY:

Generator
___ Cond. Exempt S.Q.G.
___ Small Quantity
_X_ Generator
___ Non-Handler

Storage
_X_ Container
_X_ Tank
___ Waste Pile
___ Surface Impoundment

Treatment
___ Tank
___ Land Treatment
___ Thermal
___ Chem/Phys/Bio.
___ Incinerator
___ Surface Impoundment

Transporter
_X_ Transporter
_X_ Transfer Station

Disposal
___ Landfill
___ Surface Impoundment
___ Waste Pile

2. Applicable Regulations:

___ 40 CFR 261.5 _X_ 40 CFR 262 _X_ 40 CFR 263 _X_ 40 CFR 264

___ 40 CFR 265 ___ 40 CFR 266 _X_ 40 CFR 268

3. Responsible Official: (Name & Title)

Jon Ercole - Branch Manager

4. Survey Participants & Principal Inspector:

Safety-Kleen: Jon Ercole, Peter Ciocio
DEP: Cheryl Marx, Manuel Delosantos, Knox McKee

5. Facility Latitude: 25° 51′ 34" Longitude: 80° 20′ 30"

6. Type of Ownership: FEDERAL STATE COUNTY MUNICIPAL PRIVATE

7. Permit No.:**HO 13-216311** Date Issued: **12/2/92** Expiration Date: **12/2/97**

8. Pre-arranged Inspection: ___Yes _X_No.

MANIF
Fire Extinguisher
Absorbent
3381

DATE: 11-30-94 TIME: _____

WEATHER: _____

LOCATION: Safety-Kleen Medley

PHOTO TAKEN BY: ~~M. DeSantos~~

Knox McKee

Safety-Kleen Medley 11-30-94 Dade County

Tranfer Facility is NOT distinguishable from the Storage Facility. The stripe on the Floor is NO longer visible. The chain separating the two facilities was NOT being employed.

The Safety shower in the Storage facility would NOT turn off.

Floor coating in Transfer + Storage facilities is peeling off.

Safety-Kleen Medley 11-30-94 Dade County

Return / Fill

2 satellite drums, drum at center is not labeled as agreed on in the Permit.

The return/fill area is littered with empty containers. DEP inspectors noted poor house-keeping in this area.

Open drum of Solvent was observed. The drum was left un-attended. No one could explain why it was there, or if it is product or waste.

RAGS

TRANSFER

TRANSFER

DESTROY
TO D.C

Department of Environmental Protection

Lawton Chiles
Governor

Twin Towers Office Building
2600 Blair Stone Road
Tallahassee, Florida 32399-2400

Virginia B. Wetherell
Secretary

September 12, 1994

Mr. Robert W. Willmschen, Jr.
Senior Vice President and Secretary
Saftey-Kleen Corporation
1000 North Randall Road
Elgin, Illinois 60123-7857

FL DEPARTMENT OF ENVIRONMENTAL REG. WASTE CLEANUP PALM BEACH

RECEIVED '94 SEP 16 AM 11 56

Re: FLD 097837983 Saftey-Kleen Corporation, Altamonte Springs, Florida
FLD 984167791 Saftey-Kleen Corporation, Boynton Beach, Florida
FLD 000776757 Saftey-Kleen Corporation, Delray Beach, Florida
FLD 984171694 Saftey-Kleen Corporation, Medley, Florida
FLD 980840086 Saftey-Kleen Corporation, Miami, Florida
FLD 980847214 Saftey-Kleen Corporation, Orange Park, Florida
FLD 000776716 Saftey-Kleen Corporation, Port Charlotte, Florida
FLD 984171165 Saftey-Kleen Corporation, Sanford, Florida
FLD 982133159 Saftey-Kleen Corporation, Tallahassee, Florida
FLD 049557408 Saftey-Kleen Corporation, Tampa, Florida
FLD 000776773 Saftey-Kleen Corporation, Tallahassee, Florida
FLD 980847271 Saftey-Kleen Corporation, Tampa, Florida

Dear Mr. Willmschen:

I reviewed the documentation submitted to demonstrate financial assurance for closure, post-closure care and corrective action for the above referenced facilities and find it in order. The financial test dated March 15, 1994, with amendments, and Certificate of Liability Insurance policy #NGA0105085-01 adequately demonstrate financial responsibility. Therefore, the above referenced facilities are in compliance with the financial requirements of 40 CFR Part 264, Subpart H as adopted by reference in Rule 62-730, Florida Administrative Code.

If you have any further questions, you may reach me at (904) 488-0300.

Sincerely,

David W. Mason

David W. Mason
Environmental Specialist

dwm

cc: Jeff Pallas, EPA, Atlanta
Fed Wick, DEP, Tallahassee
Bill Crawford, DEP, Tampa
Knox McKee, DEP, West Palm Beach
Mary McGehee, DEP, Orlando
Michelle Walper, Saftey-Kleen
Bill Kellenberger, DEP, Pensacola
Ashwin Patel, DEP, Jacksonville
Ghaus Minhaj, DEP, Ft. Myers
Merlin Russell, DEP, Tallahassee
Doug Outlaw, DEP, Tallahassee

"Protect, Conserve and Manage Florida's Environment and Natural Resources"

Printed on recycled paper.

FROM FINANCIAL TEST AMENDMENT 8/17/94

STATE OF FLORIDA

Casselberry 3-130-01	505 Plumosa Drive Altamonte Springs, FL 32701	FLD 097837983	($166,100)	($502,600)	
Sanford 3-130-01	600 Central Park Drive Sanford, FL 32771	FLD 984171165	($ 49,300)	(0)	
Delray Beach 3-097-01	1855 SW 4th Ave., Bldg. B, Bay 30 Delray Beach, FL 33444	FLD 000776757	($316,400)	($1,007,000)	
Boynton Beach 3-097-01	5610 Alpha Drive Boynton, Beach, FL 33426	FLD 984167791	($ 41,700)	(0)	
Orange Park 3-079-01	161 Industrial Loop South Orange Park, FL 32073	FLD 980847214	($ 73,000)	(0)	
Miami 3-097-02	7875 NW 54th Street Miami, FL 33166	FLD 980840086	($ 61,800)	($1,507,000)	
Medley 3-097-02	8755 95th Street Medley, FL 33178	FLD 984171694	($ 60,600)	(0)	
Port Charlotte 3-163-02	19200 Peachland Blvd. Port Charlotte, FL 33949	FLD 000776716	($ 26,100)	(0)	
Tallahassee 3-079-02	3082 West Tharpe Street Tallahassee, FL 32303	FLD 000776773	($ 81,300)	($546,700)	($351,400)
Tallahassee 3-079-02	4426 Entrepot Blvd. Tallahassee, FL 32310	FLD 982133159	($ 51,500)	(0)	
Tampa 3-163-01	4701 North Manhattan Tampa, FL 33614	FLD 049557408	($422,100)	($832,400)	($372,300)
Tampa 3-163-01	5309 24th Avenue South Tampa, FL 33619	FLD 980847271	($143,500)	(0)	

FLORIDA TOTALS:	**closure:**	**post-closure:**	**corrective action:**
	($1,493,400)	($4,395,700)	($723,700)

Florida Department of
Environmental Protection

Southeast District
P.O. Box 15425
West Palm Beach, Florida 33416

Lawton Chiles
Governor

Virginia B. Wetherell
Secretary

MAY 2 0 1994

HAZARDOUS WASTE INSPECTION REPORT

1. INSPECTION REPORT ___ COMPLAINT _X_ ROUTINE ___ FOLLOW-UP _X_ PERMITTING

FACILITY NAME Safety-Kleen/Medley DEP/EPA ID FLD 984171694

ADDRESS 8755 N.W. 95th Street

Medley, Florida 33178

COUNTY Dade PHONE (305) 884-0123 DATE 12/15/93 TIME 10:30AM

TYPE OF FACILITY:

Generator	Storage	Treatment
___ Small Quantity	_X_ Container	___ Tank
_X_ Generator	_X_ Tank	___ Land Treatment
___ Conditionally Exempt	___ Waste Pile	___ Thermal
___ Non-Handler	___ Surface Impoundment	___ Chem/Phys/Bio.
___ Closed		___ Incinerator
		___ Surface Impoundment

Transporter	Disposal
_X_ Transporter	___ Landfill
_X_ Transfer Facility	___ Surface Impoundment
	___ Waste Pile

2. Applicable Regulations:

___ 40 CFR 261.5 _X_ 40 CFR 262 _X_ 40 CFR 263 _X_ 40 CFR 264 ___ 40 CFR 265
_X_ 40 CFR 268

3. Responsible Official: (Name & Title)
Jorge Carvajal - Branch Manager

4. Survey Participants & Principal Inspector
Timothy Gray - Denise Holness - FDEP
Jorge Carvajal - Safety-Kleen

5. Facility Latitude: 25° 51′ 34" Longitude: 80° 20′ 30"

6. Type of Ownership: FEDERAL STATE COUNTY MUNICIPAL PRIVATE

7. Permit Number: HO13-216311 Date Issued: 12/02/92 Expiration Date: 12/02/97

FORM REV. 12/7/88
HW/4

Printed on recycled paper.

SAFETY-KLEEN/MEDLEY

FLD984171694
GENERATOR, TRANSPORTER,
STORAGE FACILITY

BACKGROUND

A hazardous waste compliance inspection was conducted at the Safety-Kleen/Medley facility located at 8755 N.W. 95th Street, Medley, Florida 33178 on December 15, 1993. The inspection was conducted to monitor the facility's compliance with the operating permit and with the Resource Conservation and Recovery Act.

Safety-Kleen (S-K) sells and distributes raw solvents and collects spent solvents, used oil and oil filters, used antifreeze, and waste paint related materials for recycling. S-K has a hazardous waste Operating Permit (OP) number H013-216311 to operate as a storage facility.

The site inspection and record review were hosted by Mr. Jorge Carvajal, Branch Manager for S-K. Department personnel who conducted the inspection were Mr. Timothy Gray and Ms. Denise Holness.

SITE INSPECTION

S-K/Medley employs 18 people and operates with twelve trucks. A truck is loaded with raw material in 5, 16 and 30-gallon containers. At the customer's facility, the raw product is exchanged for spent material which is transported back to the Medley site. All spent perchloroethylene (F002), waste paint related material (F003,F005), immersion cleaner (F002,D006,D007,D018) and used oil filters are left in their containers and placed directly into the waste storage area. S-K also handles Fluid Recovery Service (FRS) waste, which it maintains as a separate transfer facility wastestream. These wastes mainly consist of products that are not initially supplied by S-K.

When containers of spent mineral spirits (D001) are brought back into the facility, they are unloaded onto the loading dock and immediately emptied into one of two "dumpsters." Spent solvent in the "dumpster" is screen filtered and pumped to the waste mineral spirits tank located in the tank farm adjacent to main building. Each dumpster is equipped with a brush attachment to clean sludge and debris from the empty containers. This area is also known as the return/fill area and is referenced in the operating permit.

Located next to each dumpster are three 16-gallon containers. The containers are managed as satellite accumulation containers for the following wastes generated at the dumpster: (1) absorbent pads, gloves and paper, (2) glass, stones and metal and (3) dumpster sludge. Clean mineral spirits is pumped from the tank farm to containers via a pump and hand held nozzle.

A catch pan has been installed below the grating at each dumpster to collect spilled solvent. The catch pans are connected via tubing to "gas can" satellite accumulation containers located on the floor beneath the dock. S-K has taken the Department's recommendation to increase the length of piping to the satellite accumulation containers so they extend to the edge of the dock. S-K personnel do not have to crawl under the loading dock to open and close the valves on the containers.

STORAGE AREA

The container storage area consists of three operational units. 1) The Allied Product storage area is used for the storage of subsidiary products and equipment which S-K markets along with its line of recyclable solvents. 2) Fluid Recovery Service (FRS) waste area where FRS wastes are managed as a segregated and seperate transfer facility waste, and 3) the main waste storage area. Drums of hazardous waste are stored on pallets within this area. At the time of the inspection, the following hazardous waste containers were present:

8	(30-gallon) drums of dumpster mud and debris (D001)
14	(16-gallon) drums of immersion cleaner (D006,D007,D008,D018)
4	(Split 30-gallon) drums of tetrachloroethylene (F002)
2	(16-gallon) drums of tetrachloroethylene (F002)
11	(16-gallon) drums of waste paint material (F003,F005)
7	(5-gallon) drums of waste paint material (F003,F005)

Additionally, there were four 30-gallon containers of used oil filters. The used oil filters are sent to Tampa for recycling. Also present was one 16-gallon drum (F002) of FRS waste. FRS wastes are stored in separate and designated area. All observed containers were in good condition and were properly labeled.

Maximum permitted storage capacity for this area is 6,912 gallons. This amount also includes any FRS wastes that may be present.

At the time of the inspection approximately 843 gallons of waste were present in the container storage area. A spill control board was located on the wall next to the storage area, containing masks, shovel, broom, gloves and absorbent. Fire extinguishers and an eye wash station are also located nearby.

TANK FARM

Waste and raw material mineral spirits are stored individually in two 20,000-gallon steel tanks. According to the operating permit, the tanks may filled to a maximum volume of 19,000 gallons or 95 percent capacity. The tanks are located outdoors under a roof within a five foot high concrete containment system. According to Mr. Carvajal, the tanks and the alarm system are tested on a daily basis. A third 20,000-gallon tank, which is designated for the storage of used anti-freeze was also present. This tank has still not been put into operation as was noted in the last inspection. Tank levels can be read instantaneously by inputting information on a digital control panel. The panel is also part of the overfill and leak detection system.

RECORD REVIEW

S-K was requested to provide paper work and manifests for randomly selected generators noted during the container storage area inspection. Approximately ten generators (customers) were chosen for paper work tracking. All paperwork and manifests appeared to be correct and complete. Personnel training records, inspection logs and the contingency plan were also reviewed and appeared to be in order and up to date.

CONCLUSIONS

Safety-Kleen/Medley is a generator, transfer facility, transporter and a permitted storage facility for hazardous waste. S-K is also a collector and transporter of used oil.

No apparent hazardous waste violations were observed. Facility personnel were very cooperative.

Future reinspections of the facility will be conducted to ensure the proper management of hazardous waste.

cc: Kenneth Lapierre, USEPA Region IV, Atlanta
Diana Cutt, Dade County Environmental Resources Management
File, Reporting Coordinator
West Palm Beach DEP File

DATE 12/15/88
FACILITY ID CRAY, HOWARD

OR
Being a farmer disposing of waste pesticides for his own use on his own property (262.10(d) - Farmers) ____
OR
Burns hazardous waste as a fuel for the purpose of recovering usable energy (266.30(c)(2)) ____

Section C - Manifest (262.20-262.23)

1. Has generator shipped hazardous waste off-site since November 19, 1980? (Subpart B - The Manifest) ✓Yes ___No

   a. If no, do not fill out Section C and D.

   b. If yes, identify primary off-site facilities. List facilities in narrative report. LEXINGTON, S.C.

2. Does generator use manifest? (262.20 - General requirements) ✓Yes ___No
   Is EPA form 8700-22 (Rev 9-88) used? ✓Yes ___No

   If yes, inspect manifests at random. Do all manifests reviewed include the following information? (262, Appendix) (Check items not on manifest.)

   a. Generator EPA ID No. ✓Yes ___No

   b. Manifest Document No. ✓Yes ___No

   c. Generator's Name, Mailing Address, Telephone No. ✓Yes ___No

   d. Transporter(s) Name, EPA I.D. No., Telephone No. ✓Yes ___No

   e. Facility Name, Address, EPA I.D. No., Telephone No. ✓Yes ___No

   f. DOT description of the waste ✓Yes ___No

   g. (1) Containers (number and type) ✓Yes ___No

      (2) Quantity (weight or volume) ✓Yes ___No

   h. EPA waste no. ✓Yes ___No

   i. Emergency Information (optional) (Special handling instructions, Phone No.) ✓Yes ___No

   j. Is the following certification on each manifest form? ___Yes ___No

      I hereby declare that the contents of this consignment are fully and accurately described above by proper shipping name and are classified, packed, marked and labeled, and

Date 12/15/93
Inspector GRAY, HOLNESS
Facility ID# FLD 984171694

RCRA INSPECTION REPORT
GENERATOR'S CHECKLIST

Note: On multiple part questions, check those not in compliance.

Section A - Site Identification No.

1. Site Name: SAFETY-KLEEN / MEDLEY
2. Responsible Official: JORGE CARVAJAL
3. Survey Participants: TIM GRAY, DENISE HOLNESS

Section B - Hazardous Waste Determination (262.11)

1. Does generator generate hazardous waste(s) listed in Subpart D (261.30-261.33 - List of Hazardous Waste)? ✓Yes ___No

   a. If yes, list wastes, EPA numbers and quantities. TABLE I.D.3-1 OF THE PERMIT

2. Does generator generate solid waste(s) that exhibit hazardous characteristics? (corrosivity, ignitability, reactivity, toxicity characteristic)(261.20-261.24 - Characteristics of Hazardous Waste) ✓Yes ___No

   a. If yes, list wastes, EPA numbers, and quantities. SEE ABOVE

   b. Does generator determine characteristics by testing, by product knowledge, or by applying process knowledge? ALL THREE ✓Yes ___No

      (1) If determined by testing, did generator use test methods in Part 261, Subpart C (or equivalent)? ✓Yes ___No

      (2) If equivalent test methods used, attach copy of equivalent methods used.

3. Is generator subject to full regulation under Part 262? ✓Yes ___No
   (If no, check appropriate exemptions)

   Conditionally exempt small quantity generator (261.5 - Special requirements) (Describe small quantity disposal practices and checklist) ____
   OR
   Produces non-hazardous waste at this time (261.4 - Exclusions) ____
   OR
   Recycles, reclaims, uses or reuses hazardous waste at this time (261.6 - Exclusions) (Describe how this is achieved.) ____

rev. 1-92

DATE 12/15/93
FACILITY ID GRAY HAWKES

are in all respects in proper condition for transport by highway according to applicable international and national government regulations.

If I am a large quantity generator, I certify that I have a program in place to reduce the volume and toxicity of waste generated to the degree I have determined to be economically practicable and that I have selected the practicable method of treatment, storage or disposal currently available to me which minimizes the present and future threat to human health and the environment.

k. Signatures and dates

(1) Generator ✓ Yes ___ No
(2) Transporter ✓ Yes ___ No
(3) Disposer (returned copy) ✓ Yes ___ No

l. Indicate number of manifests inspected and number of violations. Note type of violation in report. 10 FACILITIES NONE

m. If copy of manifest from facility was not returned within 35 days, did generator file an exception report? (262.42 - Exception reporting) NOT HAD TO FILE ___ Yes ___ No

If yes, did it contain the following information?
Legible copy of manifest ___ Yes ___ No
AND
Cover letter explaining generators efforts to locate waste. ___ Yes ___ No

n. Does (will) generator retain copies for 3 years? ___ Yes ___ No

Section D - Pre-Transport Requirements (262.30-262.34) ___ N/A

1. Does generator package waste for transport? ✓ Yes ___ No

If no, skip to question 8.
If yes, complete the following questions.

2. Does generator package waste in accordance with 49 CFR 173, 178, and 179 (DOT requirements)? (262.30 - Packaging) ✓ Yes ___ No

DATE 12/15/93
FACILITY ID FAD 984171694

3. Inspect containers to be shipped.

   a. Are containers to be shipped in good condition? (Describe containers and condition; i.e, leaking or corroding or bulging.) ✓ Yes ___ No

   b. Is there evidence of heat generation from incompatible wastes in the containers? ___ Yes ✓ No

4. Before shipping, does the generator use DOT labeling requirements in accordance with 49 CFR 172? (263.31 - Labeling) ✓ Yes ___ No

5. Does the generator mark each package in accordance with 49 CFR 172? (262.32 - Marking) ✓ Yes ___ No

6. Is each container of 110 gallons or less marked with the following label? (262.32 - Marking) ✓ Yes ___ No

   Label saying: HAZARDOUS WASTE - Federal Law Prohibits Improper Disposal. If found, contact the nearest police or public safety authority or the U.S. Environmental Protection Agency.

   Generator's Name and Address _____

   _____

   Manifest Document Number _____

7. If there are any vehicles present on site loading or unloading hazardous waste, inspect for presence of placards. Note this instance on narrative explanation sheet. (262.33 - Placarding)

   a. Does the generator have the appropriate placards to offer the initial transporter? ✓ Yes ___ No

   b. If no, who provides placards? _____

8. Accumulation Time (262.34 - Accumulation Time)

   a. Is facility a permitted storage facility? If yes, skip to question #9. ✓ Yes ___ No

      If no, answer rest of question #8.

   b. Does the facility comply with the 90-day accumulation time limit? (262.34(a)) ___ Yes ___ No

      If no, has the generator been granted a 30-day extension? (262.34(b)) ___ Yes ___ No

      If yes, explain the unforeseen/uncontrollable circumstances in the narrative.

DATE 12/15/93
FACILITY ID GRAY, HOLNESS

c. Are containers used to store wastes? (262.34(a)(1)) ✓Yes ___No

If yes, complete Container Storage Checklist for Generators.

Is the beginning date of accumulation time clearly indicated? (262.34(a)(2)) ___Yes ___No

d. Are tanks used to store wastes? (262.34(a)(1)) ✓Yes ___No

If yes, complete Tanks Checklist for Generators.

e. While being accumulated, is each container or tank clearly marked "Hazardous Waste"? (262.34(a)(3)) ___Yes ___No

NOTE: If generator accumulates waste on site but is not a storage facility, fill out Appendix A to Generators Checklist.

9. Describe storage area. Use photos and narrative.

Section E - Recordkeeping and Records (262.40-262.43) ___N/A

Explain_____

1. Is generator keeping the following reports? (262.40 - Record keeping)
(Note: The following must be kept for a minimum of three years.)

a. Biennial reports (262.41). ✓Yes ___No

b. Exception reports where applicable (262.42). ✓Yes ___No

c. Test results where applicable. ✓Yes ___No

2. Where are records kept (at facility or elsewhere)? AT FACILITY

3. Who is in charge of keeping the records?

Name JORGE CARVAJAL Title

4. Any additional reporting? (262.43 - Additional Reporting) ___Yes ___No

Section F - Special Condition (262.50 - International Shipments) ___Yes ✓No

Explain N/A

DATE_____

FACILITY ID_____

1. Has generator received from, or transported to, a foreign source, any hazardous waste? ___Yes ___No

   a. If yes, has he filed a notice with the Regional Administrator? ___Yes ___No

   b. Is this waste manifested and signed by Foreign consignee? ___Yes ___No

   c. If generator transported wastes out of the country, has he received confirmation of delivered shipment? ___Yes ___No

Appendix A

Section A - Personnel Training (265.16)

1. Do management personnel complete hazardous waste training? ✓Yes ___No

   a. Is training on-the-job? ✓Yes ___No

   b. Is training in the classroom? ✓Yes ___No

2. Do laborers who handle hazardous waste complete training? ✓Yes ___No

   a. Is training on-the-job? ✓Yes ___No

   b. Is training in the classroom? ✓Yes ___No

3. Does training include:

   a. Emergency response procedures? ✓Yes ___No

   b. Inspection procedures? ✓Yes ___No

   c. Operation of hazardous waste handling equipment? ✓Yes ___No

4. How often is training reviewed? MONTHLY / ANNUAL

5. Does the facility have personnel training records including:

   a. Job title and description of position? ✓Yes ___No

   b. Description of employee's training? ✓Yes ___No

6. Are records maintained for three years? ✓Yes ___No

DATE 12/15/93
FACILITY ID GRAY, NORMAN'S
FLD 984171694

Section B - Preparedness and Prevention (265.30-265.37)

1. Is there evidence of fire, explosion or contamination of the environment? (265.31 - Maintenance and Operation of Facility) ___Yes ✓No

   If yes, use narrative explanation.

2. Is the facility equipped with (265.32 - Required equipment)

   a. Internal communications or alarm system? ✓Yes ___No
      Is it easily accessible in case of emergency? ✓Yes ___No

   b. Telephone or two-way radio to call emergency response personnel? ✓Yes ___No

   c. Portable fire extinguishers, fire control equipment, spill control equipment and decontamination equipment? ✓Yes ___No
      Is this equipment tested to assure its proper operation? ✓Yes ___No

      How frequently? SERVICED YEARLY/CHECKED WEEKLY

   d. Water of adequate volume for hoses, sprinklers or water spray system? ✓Yes ___No

      (1) Describe source of water ~~CITY OF MIAMI~~ MIAMI DADE WATER & SEWER

      (2) Indicate flow rate and/or pressure and storage, if applicable. _____

3. Is there sufficient aisle space to allow unobstructed movement of personnel and equipment? (e.g., adequate aisle space in between containers to check for leakage, corrosion and proper labeling, etc.) (265.35 - Required Aisle Space) ✓Yes ___No

4. Has the owner/operator made arrangements with the local authorities to familiarize them with characteristics of the facility? (Layout of facility, properties of hazardous waste handled and associated hazards, places where facility personnel would normally be working, entrances to roads inside facility, possible evacuation routes.) (265.37 - Arrangements with Local Authorities) ___N/A ✓Yes ___No

   If N/A, explain _____

5. In the case that more than one police or fire department might respond, is there a designated primary authority? (265.37 - Arrangements with Local Authorities) ___N/A ___Yes ___No

   If yes, indicate primary authority ~~CITY OF MIAMI~~ DADE COUNTY FIRE DEP.

   Is the fire department a city or volunteer fire department? DADE - COUNTY FIRE DEPT.

DATE 12/15/23
FACILITY ID GRAY, HOLMES

6. Does the owner/operator have phone numbers of and agreements with state emergency response teams, emergency response contractors and equipment suppliers? (265.37 - Arrangements with Local Authorities) ✓ Yes ___ No

   Are they readily available to the emergency coordinator? ✓ Yes ___ No

7. Has the owner/operator arranged to familiarize local hospitals with the properties of hazardous waste handled and types of injuries that could result from fires, explosions, or releases at the facility? (265.37 - Arrangements with Local Authorities) ✓ Yes ___ No

   If no, has the owner/operator attempted to do this? ___ Yes ___ No

8. If the State, or local authorities decline to enter into the above referenced agreements, has this been documented in the operating record? (265.37(b) - Arrangements with Local Authorities) NOT DECLINED ___ Yes ___ No

Section C - Contingency Plan and Emergency Procedures (265.50-265.56)

1. Does the facility have a contingency plan? (265.51 - Purpose and Implementation of Contingency Plan) ✓ Yes ___ No

2. Is it maintained at the facility? (265.53 - Copies of Contingency Plan) ✓ Yes ___ No

3. Is the contingency plan a revised SPCC Plan? (265.53 - Content of Contingency Plan) ___ Yes ___ No

   a. Does the plan include:

      (1) Action personnel will take? ✓ Yes ___ No
      (2) Evacuation routes? ✓ Yes ___ No
      (3) Emergency equipment? ✓ Yes ___ No
      (4) Is the emergency equipment properly inspected and maintained? ✓ Yes ___ No

4. Is there an emergency coordinator on site or within short driving distance of the plant at all times? ✓ Yes ___ No

5. Who is the emergency coordinator? PEDRO ESPINAL 2ND JORGE CARVAJAL

6. Has the facility supplied local police and fire departments with a copy of the contingency plan? (265.53 - Copies of Contingency Plan) ✓ Yes ___ No

Date 12/15/93
Inspector GRAY HORNBS
Facility ID# FLD 984171694

CONTAINERS STORAGE CHECKLIST FOR GENERATORS

(40 CFR Part 265, Subpart I - Use and Management of Containers)

1. Are the containers in good condition (265.171)? (Check for leaks, corrosion, bulges, etc.) ✓ Yes ___ No

2. If a container is found to be leaking, does the operator transfer the hazardous waste from the leaking container? OVERPACK ✓ Yes ___ No

3. Is the waste compatible with the containers and/or its liner (265.172)? ✓ Yes ___ No

4. Are the containers kept closed except when adding or removing wastes (265.173(a))? ✓ Yes ___ No

5. Are containers holding hazardous waste opened, handled or stored in such a manner as to cause the container to rupture or leak (265.173(b))? ___ Yes ✓ No

   If yes, explain using narrative.

6. Are each of the containers inspected at least weekly (265.174)? ✓ Yes ___ No

   If no, explain using narrative concerning the frequency of inspection.

7. Are containers holding ignitable or reactive wastes located at least 15 meters (50 feet) from the facility property line (265.176)? ___ N/A ✓ Yes ___ No

   If no, explain using narrative and document with photograph.

8. Are incompatible wastes stored in the same containers? ___ Yes ✓ No

   If yes, explain using narrative.

9. Are containers holding incompatible wastes kept apart by physical barrier or sufficient distance (265.177)? ✓ Yes ___ No

   If no, explain using narrative.

Rev 1-92

Date 12/15/93
Inspector GRADY HOLDESS
Generator EPA ID# FLD 984171694

TANKS SYSTEMS CHECKLIST FOR GENERATORS
(40 CFR Part 265, Subpart J - Tank Systems)

NOTE: If multiple tanks exist, list each tank and specify compliance or noncompliance on the facility's site plan. Indicate on site diagram which tanks are not in compliance.

1. Are tanks presently used to accumulate waste? ✓ Yes ___ No

2. Are there any exempt tank systems present (Closed-loop Recycling System - 261.4(a)(8))? ___ Yes ✓ No

3. Assessment of the integrity of existing tank systems (265.191):

   a. Number of existing tank systems without secondary containment (265.193) in operation, or for which installation commenced on or prior to July 14, 1986? 0

   b. Number of existing tank systems without secondary containment (265.193) in operation, or for which installation commenced on or prior to the date the contained waste became hazardous (after 7/14/86)? 0

   c. Are assessments on file for each of these tank systems (a & b)? ✓ Yes ___ No

   If yes, do the following apply?

   (1) Assessment conducted by 1/12/88? ✓ Yes ___ No

   (2) For wastes becoming hazardous after 7/14/86, was assessment on tank containing such waste conducted within 1 year after the date the waste became hazardous? ✓ Yes ___ No

   (3) Certification(s) by independent, qualified, and registered P.E.(s)? ✓ Yes ___ No

   (4) Integrity assessment(s) results?

   ___ not leaking?

   ___ unfit for use? (see item #8)

Comments:

DATE _____
FACILITY ID _____

4. New tank systems or components (265.192):

a. Number of new tank systems or components installed or put into use after 7/14/86? 3

b. Are assessments on file for each of the new tank systems or components? ✓ Yes ___ No

If yes, do the following apply:

(1) Assessment(s) certified by an independent, qualified, registered P.E.? ✓ Yes ___ No

(2) Assessment(s) include the following information:

- Design standards (including secondary containment unless a variance-265.193(g) has been received? ___ Yes ___ No

- Factor affecting corrosion potential of tanks or components in which the external shell or any external metal component is in contact with soil or water (determined by a corrosion expert)? ___ Yes ___ No

- The type and degree of external corrosion protection that is needed to ensure the integrity of the tank system(s) or components(s) described above (determined by a corrosion expert)? ___ Yes ___ No

- A determination of design or operational measures that will protect underground tank system components against potential damage from vehicular traffic? ___ Yes ___ No

- Design considerations to ensure that tank foundations will maintain the load of a full tank? ___ Yes ___ No

- Tank systems will be anchored to prevent flotation or dislodgement where it is placed in a saturated zone or is located within a seismic fault zone? ___ Yes ___ No

- Tank systems will withstand the effects of frost heave? ___ Yes ___ No

c. Are certification statements by a qualified installation inspector or qualified registered professional engineer on file to attest:

(1) to proper tank system or component installation, tank system tightness, and that necessary repairs were performed if needed? ___ Yes ___ No

(2) That backfill, used for underground tank systems or components, was made up of noncorrosive, porous and homogeneous materials that were placed properly around the system or component to ensure proper support? ___Yes ___No

(3) That ancillary equipment has been supported and and protected against physical damage and excessive stress due to settlement, vibration, expansion or contraction? ___Yes ___No

(4) That the type and degree of corrosion protection necessary was provided, based on the certified design assessment of the system? ___Yes ___No

(5) That an independent corrosion expert ensured the proper installation of a corrosion protection system if it was field-fabricated? ___Yes ___No

d. Has secondary containment been provided as required in 265.193 (see Item #6)?

(1) Has a variance (265.193(g)) been obtained from secondary containment? ___Yes ___No

Comments:

5. Containment and detection of releases (265.193).

NOTE: Tank systems storing hazardous waste that contain no free liquids and are located within buildings with impermeable floors are exempt from these requirements (265.190(a)).

a. How old are the existing tank systems? 2 YEARS

(1) If not known, what is the age of the facility? ___

b. How many existing systems are being used to store or treat dioxin containing wastes: F020, F021, F022, F023, F026, and F027? 0

c. Are there any existing tank systems which are used to store or treat materials which became hazardous wastes after 1/12/87? ___Yes ✓No

(1) How many? ___

d. Use the guidelines in 265.193(a)(1)-(5) to determine when secondary containment meeting the requirement of 265.193 is to be provided (use narrative explanation sheet if necessary).

e. Have any variances (265.193(g)) from secondary containment been requested for existing tank systems? ___Yes ✓No

f. Are leak tests meeting the requirements of 265.191(b)(5) conducted annually for non-enterable underground tanks without secondary containment? N/A ___Yes ___No

g. Are leak tests as described above, or internal inspections or other tank integrity examinations done by an independent, qualified, registered P.E. annually for all other types of tanks systems and ancillary equipment? ✓Yes ___No

h. Are records of the results of leak tests or other tank integrity assessments kept on file? ✓Yes ___No

i. Were any tank systems or components found to be leaking or unfit for use as a result of leak tests or other assessments?

NOTE: If the answer is yes, refer to item #8 - Response to leaks or spills and disposition of leaking or unfit-for-use tank systems (265.196).

Comments:

6. Secondary containment systems (265.193(b)-(f)).

a. Has secondary containment been provided for any tank system or component (see Items 4.d., 5.d, and 9.f)? ✓Yes ___No

b. If yes, has the containment system been:

(1) Designed, installed, and operated to prevent any migration of wastes or accumulated liquid out of the system to the soil, ground water, or surface water at any time during its use? ✓Yes ___No

(2) Capable of detecting and collecting releases and accumulated liquids until the collected material is removed? ✓Yes ___No

DATE 12/15/93
FACILITY ID FLD 984 171 694

c. To satisfy b., has the containment system been:

(1) Constructed of or lined with materials that are compatible with the waste(s) to be contained? ✓ Yes ___ No

(2) Provided with sufficient strength and thickness to prevent failure due to pressure gradients, physical contact with waste it is exposed to, climatic conditions, the stress of installation, and the stress of daily operations including vehicular traffic? ✓ Yes ___ No

(3) Placed on a foundation or base capable of providing support to the system, resistance to pressure gradients above and below, and protection against failure due to settlement, compression or uplift? ___ Yes ___ No

(4) Provided with a leak detection system that is designed and operated so that it will detect the failure of either the primary and secondary containment structure or any release of waste or accumulated liquid into the secondary containment system within 24 hours or at the earliest practicable time based on existing leak detection technology and site conditions? ___ Yes ___ No

(5) Sloped or otherwise designed or operated to drain or remove liquids resulting from leaks, spills, or precipitation? ___ Yes ___ No

d. Which device below is used to provide secondary containment for tanks? (Check those that apply.)

___(1) A liner (external to the tank)
___(2) A vault
___(3) A double-walled tank
___(4) An equivalent device approved by the Department.

e. If an external liner system is used, has it been:

(1) Designed or operated to contain 100% of the capacity of the largest tank within its boundary? N/A ___ Yes ___ No

(2) Designed or operated to prevent run-on or infiltration of precipitation into the system? ___ Yes ___ No

NOTE: If the containment collection system has sufficient excess capacity - able to contain precipitation from a 25-year, 24-hour rainfall event - this feature is not necessary.

(3) Determined to be free of cracks and gaps? ___Yes ___No

(4) Designed and installed to completely surround the tank and to cover all surrounding earth to prevent lateral and vertical migration of waste? ___Yes ___No

f. If a vault system is used, has it been:

(1) Designed or operated to contain 100% of the capacity of the largest tank within its boundary? ___Yes ___No

(2) Designed or operated to prevent run-on or infiltration of precipitation into the system (see note above)? ___Yes ___No

(3) Constructed with chemical-resistant water stops in place at all joints (if any)? ___Yes ___No

(4) Provided with an impermeable interior coating or lining that is compatible with the accumulated waste to prevent migration into the concrete? ___Yes ___No

(5) Provided with protection against the formation and ignition of vapors within the vault if the wastes being accumulated are ignitable or reactive? ___Yes ___No

(6) Provided with an exterior moisture barrier or otherwise designed or operated to prevent migration of moisture into the vault (if it is subject to hydraulic pressure)? ___Yes ___No

g. If double-walled tanks are used, are they:

(1) Designed as an integral structure so that the outer shell will contain releases from the inner tank? ___Yes ___No

(2) Protected, if constructed of metal, from corrosion on the inner tank interior and outer shell exterior? ___Yes ___No

(3) Provided with a built-in, continuous leak detection system capable of detecting a release within 24 hours or at the earliest practicable time based on existing technology and site conditions? ___Yes ___No

Comments:

DATE 12/15/93
FACILITY ID FLD 984171694

7. General operating requirements (265.194).

a. Is there any evidence of ruptures, leaks, corrosion, or failure in the tank system or ancillary equipment? ___Yes ✓No

NOTE: If the answer is yes, explain in the narrative report.

b. Are appropriate controls and practices such as the following used to prevent spills and overflows from tanks or secondary containment systems:

(1) Spill prevention controls (e.g, check valves, dry discount couplings, etc.)? ✓Yes ___No

(2) Overfill prevention controls (e.g., level sensing devices, high level alarms, automatic feed cutoff, or bypass to a standby tank)? ✓Yes ___No

(3) Maintenance of sufficient freeboard in uncoverd tanks to prevent overtopping by wave, wind action, or precipitation? N/A ___Yes ___No

c. Have any leaks or spills occurred in a tank system or its ancillary equipment? ___Yes ✓No

NOTE: If the answer is yes, explain what steps were taken in response to this situation in the narrative report (see item #8 - 265.196).

Comments:

8. Inspections (265.195).

a. Does the owner/operator inspect the following, each operating day, where present:

(1) Overfill/spill control equipment (e.g. waste-feed cutoff systems, bypass systems, and drainage systems)? ✓Yes ___No

(2) Aboveground portions of the tank system to detect corrosion or releases of waste? ✓Yes ___No

(3) Data gathered from monitoring equipment and leak detection equipment (e.g. pressure and temperature guages, monitoring wells)? ✓Yes ___No

(4) The construction materials and the area immediately surrounding the externally accessible portion of the tank system including secondary containment structures (e.g. dikes) to detect erosion or signs of releases of hazardous waste (e.g. wet spots, dead vegetation)? ✓ Yes ___ No

b. Are cathodic protection systems, if present, inspected according to the following schedule:

(1) Six months to confirm the proper operation of the cathodic protection system after the initial installation, and annually thereafter? N/A ___ Yes ___ No

(2) Every other month to inspect sources of impressed current? ✓ Yes ___ No

c. Are the inspection results documented in the operating record of the facility?

Comments:

9. Response to leaks or spills and disposition of leaking or unfit-for-use tank systems (265.196).

a. If a tank or secondary containment system has a leak or a spill has occurred, was the system immediately removed from service and the flow of hazardous waste into the system immediately stopped? NOT HAD A SPILL ___ Yes ___ No

(1) If the release was from the tank system, was as much of the waste as necessary removed within 24 hours or at the earliest practicable time after its detection to allow inspection and repair to be performed? ___ Yes ___ No

(2) If the release was to the secondary containment system, were all released materials removed within 24 hours or in as timely a manner as possible to prevent harm to human health and the environment? ___ Yes ___ No

b. If there was a visible release to the environment, was a visual inspection conducted by the owner/operator? ___ Yes ___ No

(1) Was further migration of the leak or spill to soils or surface water prevented? ___ Yes ___ No

(2) Was the visible contamination removed and properly disposed of? ___Yes ___No

N/A

c. Was the release to the environment reported to the Department within 24 hours of detection? ___Yes ___No

NOTE: A leak or spill of less than or equal to a quantity of one pound of hazardous waste and that is immediately contained and cleaned up is exempted from this requirement.

d. Was a report to the Department, as specified in 265.196(d)(3), submitted within 30 days for nonexempt releases? ___Yes ___No

e. If a leak was the cause of a release, was the system repaired before being returned to service? ___Yes ___No

f. If the leak caused a release to the environment from a component of a tank system without secondary containment, was that component provided with secondary containment as specified in 265.193 before it was returned to service (see Item #6)? ___Yes ___No

NOTE: If the leaking component is aboveground and can be inspected visually, secondary containment does not need to be provided after repair.

***: If a component was replaced in order to repair the system, the owner or operator must comply with the standards for new tank systems or components 265.192 and 265.193 (see item #4).

g. Was a major repair performed to return the tank system back to service? ___Yes ___No

(1) If yes, was a certification of this major repair done by an independent, qualified, registered P.E. before the system was returned to service? ___Yes ___No

(2) Was this certification submitted to the department within 7 days after returning the system to service? ___Yes ___No

Comments:

10. Closure and post-closure care (265.197).

a. At closure of a tank system, did the owner/operator remove or decontaminate all waste residues, contaminated containment system components, contaminated soils, and structures and equipment contaminated with waste, and manage them as hazardous waste? ___Yes ___No

Comments:

11. Special requirements for ignitable or reactive wastes (265.198).

a. Are ignitable or reactive wastes placed in tanks? ✓ Yes ___No

(1) If yes, are they treated, rendered, or mixed before or immediately after placement in the tank system so that:

- The resulting waste, mixture, or dissolved material no longer meet the definition of ignitable or reactive waste and 265.17(b) is complied with? ___Yes ___No

OR

- The waste is stored or treated in such a way that is protected from any material or conditions that may cause the waste to ignite or react? ✓ Yes ___No

NOTE: If yes, use narrative explanation sheet to describe separation and confinement procedures. If no, use narrative explanation sheet to describe sources of ignition or reaction.

OR - The tank system is used solely for emergencies? ___Yes ✓ No

b. Are protective distances maintained between the tank accumulation areas and any public ways, streets, alleys, or adjoining property lines that can be built upon as required in Tables 2-1 through 2-6 of the National Fire Protection Association's "Flammable and Combustible Liquids Code"? ✓ Yes ___No

Comments:

DATE_____
FACILITY ID_____

12. Special requirements for incompatible wastes (265.199).

a. Is there evidence that incompatible wastes were in the same tank? ___Yes ✓No

NOTE: If yes, use narrative explanation sheet to state the results (e.g. signs such as fire, toxic mists, heat generation, bulging containers, etc.) and whether 265.17(b) was complied with.

b. If a waste is to be placed in a tank that previously held an incompatible waste or material, was that tank washed? N/A ___Yes ___No

NOTE: If yes, describe the washing procedure on the narrative explanation sheet. If no, was 265.17(b) complied with?

Comments:

Date 12/15/93
Inspector GRAY HOLNESS
Facility ID# FLD 984171694

TRANSPORTERS CHECKLIST

I. SITE NAME: SAFETY-KLEEN/MEDLEY

II. TRANSPORTER REQUIREMENTS (40 CFR 263)

1.	Do vehicles transporting hazardous waste have the appropriate placards? (263.10)(49 CFR 172.500)	✓ Yes ___ No
2.	Does transporter have an EPA identification number? (263.11(a))	✓ Yes ___ No
3.	Does the transporter use manifest system as required by 263.20?	✓ Yes ___ No
	Do the manifests contain at least:	
a.	Name, address, and EPA ID of transporter?	✓ Yes ___ No
b.	Name, address, and EPA ID code of generator?	✓ Yes ___ No
c.	Name, address, identification code of designated permitted facility?	✓ Yes ___ No
d.	Corresponding manifest document number?	✓ Yes ___ No
e.	Description and quantity of each hazardous waste?	✓ Yes ___ No
f.	Signature of subsequent transporters?	✓ Yes ___ No
g.	Signatures signifying proper delivery or reasons why delivery could not be certified?	✓ Yes ___ No
h.	EPA waste codes?	✓ Yes ___ No

DATE_____
FACILITY ID_____

4. International shipments: (263.20(g)) ___✓___ N/A

   a. Record of date waste left U.S.? ___Yes ___No

   b. Presence of one signed copy in records? ___Yes ___No

   c. Signed copy of manifest returned to the generator? ___Yes ___No

   d. Copy of the manifest given to a U.S. Customs official at the point of departure from the United States? ___Yes ___No

5. For SQG waste:

   a. Is waste transported according to reclamation agreement? ___Yes ___No

   b. Is following information recorded on a shipping paper:

      Name, address, and EPA ID of waste generator ___Yes ___No
      Quantity of waste accepted ___Yes ___No
      DOT - required shipping info ___Yes ___No
      Date waste is accepted ___Yes ___No

   c. Does transporter carry this shipping paper during transport? ___Yes ___No

   d. Are records maintained for three years after termination or expiration of reclamation agreement? ___Yes ___No

6. Are copies of the manifest retained for 3 years? (263.22) ___Yes ___No

7. Is there evidence of discharge of hazardous waste? (263.30) ___Yes ___No

8. Has transporter demonstrated the financial responsibility required under 17-30.170(2) ___Yes ___No

9. Does the transporter verify financial responsibility with the Department annually (17-730.170(3))? ___Yes ___No

III. <u>TRANSFER FACILITY REQUIREMENTS (17-730.171)</u>

A. Does transporter comply with 10 day storage limit for transfer facilities? (263.12) ___Yes ___No

   1. Is the hazardous waste packaged according to 262.30? (263.12) ___Yes ___No

DATE 12/15/93
FACILITY ID

B. General Facility Standards (265 Subpart B)

1. Security (265.14)

a. Is the facility security system adequate to minimize unauthorized entry? ✓ Yes ___ No

b. Are signs posted and legible for 25 feet? ✓ Yes ___ No

2. Inspection Requirement (265.15)

a. Does the facility have a copy of the Inspection Plan? ✓ Yes ___ No

b. Does the facility have completed inspection logs? ✓ Yes ___ No

c. Were the deficiencies corrected in a timely manner? ✓ Yes ___ No

d. Are the inspection logs maintained at the facility for 3 years? ✓ Yes ___ No

3. Personnel Training (265.16)

a. Do management personnel complete hazardous waste training? ✓ Yes ___ No

- Is training on the job? ✓ Yes ___ No
- Is training in the classroom? ✓ Yes ___ No

b. Do laborers who handle hazardous waste complete training? ✓ Yes ___ No

- Is training on the job? ✓ Yes ___ No
- Is training in the classroom? ✓ Yes ___ No

c. Does training include:

- Emergency response procedures? ___ Yes ___ No
- Inspection procedures? ___ Yes ___ No
- Operation of hazardous waste handling equipment? ___ Yes ___ No

d. How often is training reviewed? MONTHLY / ANNUAL

e. Does the facility have personnel training records including:

- Job title and description of position? ✓ Yes ___ No
- Description of employee's training ✓ Yes ___ No

DATE 12/15/93
FACILITY ID FLD 984171694

f. Is training successfully completed within 6 months of hiring/transfer to HW position? ✓ Yes ___ No

g. Are records maintained for three years at the facility? ✓ Yes ___ No

4. Ignitable, Reactive, or Incompatible Waste (265.17)

a. Is the waste separated and confined from sources of ignition or reaction, sparks, spontaneous ignition, and radiant heat? ✓ Yes ___ No

b. Are "No Smoking" signs posted in the area? ✓ Yes ___ No

C. Preparedness and Prevention (265 Subpart C)

1. Is there evidence of fire, explosion or contamination of the environment? (265.31 - Maintenance and Operation of Facility) ___ Yes ✓ No

If yes, use narrative explanation.

2. Is the facility equipped with (265.32 - required equipment):

a. Internal communications or alarm system? ✓ Yes ___ No
Is it easily accessible in case of emergency? ✓ Yes ___ No

b. Telephone or two-way radio to call emergency response personnel? ✓ Yes ___ No

c. Portable fire extinguishers, fire control equipment, spill control equipment and decontamination equipment? ✓ Yes ___ No

Is this equipment tested to assure its proper operation? ✓ Yes ___ No

How frequently? CHECKED WEEKLY / SERVICED YEARLY

d. Water of adequate volume for hoses, sprinklers or water spray system? ✓ Yes ___ No

(1) Describe source of water. MIAMI-DADE WATER & SEWER

(2) Indicate flow rate and/or pressure and storage capacity, if applicable. _____

DATE_____

FACILITY ID_____

3. Is there sufficient aisle space to allow unobstructed movement of personnel and equipment? (e.g., adequate aisle space in between barrels to check for leakage, corrosion and proper labeling, etc.) (265.35 - Required Aisle Space) ✓Yes ___No

4. Has the owner/operator made arrangements with the local authorities to familiarize them with characteristics of the facility? (Layout of facility, properties of hazardous waste handled and associated hazards, places where facility personnel would normally be working, entrances to roads inside facility, possible evacuation routes.) (265.37 - Arrangements with Local Authorities) ___N/A ✓Yes ___No

If N/A, explain_____

5. In the case that more than one police or fire department might respond, is there a designated primary authority? (265.37 - Arrangements with Local Authorities) ___N/A ___Yes ___No

If yes, indicate primary authority. DADE COUNTY FIRE DEPT.
Is the fire department a city or volunteer fire department? CITY (COUNTY)

6. Does the owner/operator have phone number of and agreements with state emergency response teams, emergency response contractors and equipment suppliers? (265.37 - Arrangements with Local Authorities) ✓Yes ___No

Are they readily available to the emergency coordinator? ✓Yes ___No

7. Has the owner/operator arranged to familiarize local hospitals with the properties of hazardous waste handled and types of injuries that could result from fires, explosions, or releases at the facility? (265.37 - Arrangements with Local Authorites) ✓Yes ___No

If no, has the owner/operator attempted to do this?

8. If the State, or local authorities decline to enter into the above referenced agreements, has this been documented in the operation record? (265.37 - Arrangements with Local Authorities) ___Yes ✓No

DATE 12/15/93
FACILITY ID FLD 984 171 694

C. Contingency Plan and Emergency Procedures (265 Subpart D)

1. Does the facility have a contingency plan? (265.51 - Purpose and Implementation of Contingency Plan) ✓Yes ___No

2. Is it maintained at the facility? (265.53 - Copies of Contingency Plan) ✓Yes ___No

3. Is the contingency plan a revised SPCC Plan (265.52 - Content of Contingency Plan) ___Yes ___No

a. Does the plan include:

(1) Action personnel will take? ✓Yes ___No

(2) Evacuation routes? ✓Yes ___No

(3) Emergency Equipment? ✓Yes ___No

(4) Is the emergency equipment properly inspected and maintained? ✓Yes ___No

4. Is there an emergency coordinator on site or within short driving distance of the plant at all times? (265.55 - Emergency Coordinator) ___Yes ___No

5. Who is the emergency coordinator? PEDRO ESPINAL

6. Has the facility supplied local police and fire departments with a copy of the contingency plan? (265.53(b) - Content of Contingency Plan) ✓Yes ___No

D. Container Storage Checklist

(Subpart I - Use and Management of Containers 265.170)

1. Are the containers in good condition (265.171)? (check for leaks, corrosion, bulges, etc.) ✓Yes ___No

2. If a container is found to be leaking, does the operator transfer the hazardous waste from the leaking container? ✓Yes ___No

3. Is the waste compatible with the containers and/or its liner? (265.172) ✓Yes ___No

DATE_____

FACILITY ID_____

4. Are containers holding hazardous waste opened, handled or stored in such a manner as to cause the container to rupture or leak? (265.173) ___Yes ✓No

If yes, explain using narrative.

5. Are each of the containers inspected at least weekly (265.174)? ✓Yes ___No

If no, explain using narrative concerning the frequency of inspection.

6. Are containers holding ignitable or reactive wastes located at least 15 meters (50 feet) from the facility property line? (265.176) ✓Yes ___No

If yes, explain using narrative.

7. Are incompatible wastes stored in the same containers? ___Yes ✓No

If yes, explain using narrative.

8. Are containers holding incompatible wastes kept apart by physical barrier or sufficient distance? ✓Yes ___No

If no, explain using narrative.

E. Does facility have a written closure plan satisfying requirements of closure performance, notification, and decontamination standards of 40 CFR 265.111, 265.112(c), 265.114, 265.115? (17-30.171(2)(b)) ✓Yes ___No

F. Is hazardous waste that is stored in containers or vehicles stored on a man made surface which is capable of preventing spills or releases to the ground? (17-730.171(2)(d)) ✓Yes ___No

G. Is a written log maintained for all waste entering or leaving the transfer facility? (17-730.171(2)(e)) ✓Yes ___No

Does the log contain:

Generators' names? ✓Yes ___No
Manifest numbers? ✓Yes ___No
Dates when waste enters and leaves facility? ✓Yes ___No

DATE 12/15/93
FACILITY ID FLD 984171694

H. Has the facility notified the department on Form 17-730.900(6) (Transfer facility notification form)? (17-730.171(3)) ✓ Yes ___ No

I. Does the transfer facility have an EPA/DER ID number? ✓ Yes ___ No

IV. UNREGULATED WASTES (HOUSEHOLD/CONDITIONALLY EXEMPT SMALL QUANTITY GENERATOR WASTES) ___ N/A

1. Does the transporter have documentation that this waste was generated by an unregulated source? ___ Yes ___ No

2. If no, is the transporter assuming responsibility as the generator of this waste? ___ Yes ___ No

   a. If yes, complete the applicable Generator or Small Quantity Generator checklist.

   b. If no, the inspector should inform the transporter that he will be held responsible as the generator of the waste and will be reinspected to ensure that the applicable requirements are being satisfied. A follow-up inspection should be scheduled as follows:

      i) 90 days after initial inspection if the quantity of "unregulated" wastes on site exceed 1000 kg.

      ii) 180 days after initial inspection if the quantity of "unregulated" wastes on site are less than 1000 kg.

3. Does the transporter mix/consolidate hazardous wastes of different DOT shipping descriptions 263.10(c)(2)? ___ Yes ✓ No

   If yes, complete the Generator checklist.

V. LAND BAN WASTE

1. Does the transporter manage restricted (land ban) wastes? ✓ Yes ___ No

   If yes, check appropriate box(es).

   "California List" ✓
   F--- List ✓

Date 12/15/93
Inspector GRAY, HOWELL
Facility ID# FLD 984177694

RCRA COMPLIANCE INSPECTION REPORT
TSD FACILITIES CHECKLIST

General Facility Standards

1. Site Name SAFETY-KLEEN / MEDLEY

2. Has facility received hazardous waste from a foreign source? (264.12 - required notices) N/A ___Yes ✓No

   If yes, has he filed a notice with the Regional Administrator and DER? N/A ___Yes ___No

3. Does the facility have a copy of the permit along with the approved application? ✓Yes ___No

Waste Analysis (264.13) 264___ Permit Condition____

1. Is a copy of the waste analysis plan maintained at the facility? ✓Yes ___No

2. Does the facility have copies of completed waste analysis reports? ✓Yes ___No

3. Has the waste analysis been reviewed or repeated as required? ✓Yes ___No

4. (For off-site facilities) waste analysis that generators have agreed to supply? ___Yes ___No

5. Check waste analysis equipment to see if it is on-site and in working condition? ___Yes ___No

Security (264.14) 264___ Permit Condition___

1. Is the facility security system adequate to minimize unauthorized entry? ✓Yes ___No

2. Are signs posted and legible for 25 feet? ✓Yes ___No

Inspection Requirement (264.15) 264___ Permit Condition___

1. Does the facility have a copy of the Inspection Plan? ___Yes ___No

2. Does the facility have completed inspection logs? ✓Yes ___No

3. Were the deficiencies corrected in a timely manner? ✓Yes ___No

4. Are the inspection logs maintained at the facility for 3 years? ✓Yes ___No

5. Is the facility equipped to prevent fire, explosion or contamination of the environment and is the equipment in working condition? ✓Yes ___No

Personnel Training (264.16) 264___ Permit Condition___

1. Does facility have copy of training plan? ✓Yes ___No

2. Does facility have personnel training records? ✓Yes ___No

3. Has management completed training? ✓Yes ___No

4. Have laborers completed training? ✓Yes ___No

5. Is training successfully completed within 6 months of hiring/transfer to HW position? ✓Yes ___No

6. Has the training been conducted as stated in the Training Plan? ✓Yes ___No

7. Do the facility personnel training records include:

   a. Job title and description of position? ✓Yes ___No

   b. Description of employee's training? ✓Yes ___No

8. Are records maintained for 3 years? ✓Yes ___No

Ignitable, Reactive, or Incompatible Waste (264.17) 264___ Permit Condition___

1. Is the waste separated and confined from sources of ignition or reaction, sparks, spontaneous ignition, and radiant heat? ✓Yes ___No

2. Are "No Smoking" signs posted in the area? ✓Yes ___No

DATE [redacted] 12/15/93
FACILITY ID FLD 984171694

Preparedness and Prevention (264.30-.37) 264___ Permit Condition___

1. Is there evidence of fire, explosion or contamination of the environment? ___Yes ✓No

2. Is the facility equipment located in accordance with the approved plan and is it functional? ✓Yes ___No

Contingency Plan and Emergency Procedures (264.50-56) 264___ Permit Condition___

1. Does the facility have a copy of the Contingency Plan? ✓Yes ___No

2. Has the plan been amended and have the amendments been approved? ✓Yes ___No

3. Were the plan revisions submitted to all authorities? ✓Yes ___No

4. Is the emergency coordinator on-site or within short driving distance of plant at all times? ✓Yes ___No

5. Verify equipment location. Is it in working condition? ✓Yes ___No

Manifest System, Recordkeeping and Report (264.70-77) 264___ Permit Condition___

1. Does the facility have copies of the Manifest? ✓Yes ___No

   a. Are the manifests signed and dated and returned to the generator? ✓Yes ___No

   b. Is a signed copy given to the transporter? ✓Yes ___No

   c. Are there any manifests that have not been completely filled out? ✓Yes ___No

2. Are copies of the manifest retained for three years? ✓Yes ___No

3. Has the facility received any shipments of hazardous waste which were inconsistent with the manifest? ___Yes ✓No

a. If yes, has he attempted to reconcile the discrepancy with the generator and transporter? ___Yes ___No

b. If no, has DER been notified? ___Yes ___No

4. Does the facility have operating records that show a description and quantity of each hazardous waste and the date and method of T,S,D at the facility? ___Yes ___No

5. Does location and quantity of hazardous waste agree with operating record? ✓Yes ___No

Groundwater Monitoring (264.90-.100) 264___ Permit Condition___

1. Does the facility have a copy of the Groundwater Plan? ___Yes ___No

2. Does the facility have copies of the groundwater analysis? ___Yes ___No

3. Has the analysis been conducted as specified? ___Yes ___No

4. Has there been a statistically significant increase of the value for the parameter from background? ___Yes ___No

5. Did the facility notify the Department of the parameter that showed a statistically significant increase within 7 days? ___Yes ___No

6. Verify location of wells? ___Yes ___No

7. Verify condition of wells and check for caps and locks? ___Yes ___No

Closure and Post-Closure (264.110-.120) 264___ Permit Condition____

1. Is a copy of the approved plan and all revisions kept at the facility? ✓Yes ___No

2. Does the maximum inventory of wastes at the facility exceed that specified in the Closure Plan? ___Yes ✓No

3. Does the facility have an approved post-closure plan (for land disposal facilities)? N/A ___Yes ___No

DATE 12/15/93
FACILITY ID FXD 984171694

4. Has the plan been amended and approved by the Department and distributed to the appropriate agencies? ✓ Yes ___ No

Financial (264.140-.151) 264___ Permit Condition___

1. Does the facility have a written estimate, in current dollars, of the cost of closing the facility? ✓ Yes ___ No

2. Has the financial assurance been updated for the last year? ✓ Yes ___ No

3. Is the facility in compliance with the financial assurance regulation with respect to:

Closure cost?		✓ Yes	___ No
Post-closure cost?	___ N/A	___ Yes	___ No
Sudden liability?		✓ Yes	___ No
Non-sudden liability?	___ N/A	___ Yes	___ No

Date 12/15/93
Inspector GRAY HOLNESS
Facility ID# ELD 984171694

TSD CONTAINERS CHECKLIST (264.170-264.178)
264___ Permit Condition___

1.	Are the containers in good condition (264.171)?	✓ Yes ___ No
2.	Are the containers managed in accordance with the permit (264.171)?	✓ Yes ___ No
3.	Is the number of containers equal to or below the max inventory for the permit?	✓ Yes ___ No
4.	Are the containers in the designated bays by waste type?	✓ Yes ___ No
5.	Is the waste stored in the specified container?	✓ Yes ___ No
6.	Are containers holding hazardous waste opened, handled or stored in such a manner as to cause the container to rupture or leak (264.173(b))?	___ Yes ✓ No
	Explain.	
7.	Are each of the containers inspected at least weekly (264.174)?	✓ Yes ___ No
8.	Is the secondary containment system functional and are free liquids removed and managed in accordance with the permit?	✓ Yes ___ No
9.	Are containers holding ignitable or reactive wastes located at least 15 meters (50 feet) from the facility property line?	✓ Yes ___ No
10.	Is there sufficient aisle space to allow unobstructed movement and inspection?	✓ Yes ___ No
11.	Specific Condition on Permit:	
	_____	___ Yes ___ No
	_____	___ Yes ___ No
	_____	___ Yes ___ No

Date 12/15/94
Inspector GRAY HOLNESS
Generator EPA ID# FLD 984177694

TSD TANKS CHECKLIST
(40 CFR Part 264, Subpart J - Tank Systems)

NOTE: If multiple tanks exist, list each tank and specify compliance or noncompliance on the facility's site plan. Indicate on site diagram which tanks are not in compliance.

1. Are tanks presently used to accumulate waste? ✓ Yes ___ No

2. Are there any exempt tank systems present (Closed-loop Recycling System - 261.4(a)(8))? ___ Yes ___ No

3. Assessment of the integrity of existing tank systems (264.191):

   a. Number of existing tank systems without secondary containment (264.193) in operation, or for which installation commenced on or prior to July 14, 1986? 0

   b. Number of existing tank systems without secondary containment (264.193) in operation, or for which installation commenced on or prior to the date the contained waste became hazardous (after 7/14/86)? 0

   c. Are assessments on file for each of these tank systems (a & b)? ___ Yes ___ No

   If yes, do the following apply?

   (1) Assessment conducted by 1/12/88? ___ Yes ___ No

   (2) For wastes becoming hazardous after 7/14/86, was assessment on tank containing such waste conducted within 1 year after the date the waste became hazardous? ___ Yes ___ No

   (3) Certification(s) by independent, qualified, and registered P.E.(s)? ___ Yes ___ No

   (4) Integrity assessment(s) results?

   ___ not leaking?

   ___ unfit for use? (see item #8)

Comments:

DATE_____

FACILITY ID_____

4. New tank systems or components (264.192):

a. Number of new tank systems or components installed or put into use after 7/14/86? 3

b. Are assessments on file for each of the new tank systems or components? ✓Yes ___No

If yes, do the following apply:

(1) Assessment(s) certified by an independent, qualified, registered P.E.? ✓Yes ___No

(2) Assessment(s) include the following information:

- Design standards (including secondary containment unless a variance-264.193(g) has been received)? ___Yes ___No

- Factor affecting corrosion potential of tanks or components in which the external shell or any external metal component is in contact with soil or water (determined by a corrosion expert)? ___Yes ___No

- The type and degree of external corrosion protection that is needed to ensure the integrity of the tank system(s) or components(s) described above (determined by a corrosion expert)? ___Yes ___No

- A determination of design or operational measures that will protect underground tank system components against potential damage from vehicular traffic? ___Yes ___No

- Design considerations to ensure that tank foundations will maintain the load of a full tank? ___Yes ___No

- Tank systems will be anchored to prevent flotation or dislodgement where it is placed in a saturated zone or is located within a seismic fault zone? ___Yes ___No

- Tank systems will withstand the effects of frost heave? ___Yes ___No

c. Are certification statements by a qualified installation inspector or qualified registered professional engineer on file to attest:

(1) to proper tank system or component installation, tank system tightness, and that necessary repairs were performed if needed? ___Yes ___No

(2) That backfill, used for underground tank systems or components, was made up of noncorrosive, porous and homogeneous materials that were placed properly around the system or component to ensure proper support? ___Yes ___No

(3) That ancillary equipment has been supported and and protected against physical damage and excessive stress due to settlement, vibration, expansion or contraction? ___Yes ___No

(4) That the type and degree of corrosion protection necessary was provided, based on the certified design assessment of the system? ___Yes ___No

(5) That an independent corrosion expert ensured the proper installation of a corrosion protection system if it was field-fabricated? ___Yes ___No

d. Has secondary containment been provided as required in 264.193 (see Item #6)?

(1) Has a variance (264.193(g)) been obtained from secondary containment? ___Yes ___No

Comments:

5. Containment and detection of releases (264.193).

NOTE: Tank systems storing hazardous waste that contain no free liquids and are located within buildings with impermeable floors are exempt from these requirements (264.190(a)). EXEMPT

a. How old are the existing tank systems? ____

(1) If not known, what is the age of the facility? ____

b. How many existing systems are being used to store or treat dioxin containing wastes: F020, F021, F022, F023, F026, and F027? ____

c. Are there any existing tank systems which are used to store or treat materials which became hazardous wastes after 1/12/87? ___Yes ___No

(1) How many? ____

d. Use the guidelines in 264.193(a)(1)-(5) to determine when secondary containment meeting the requirement of 264.193 is to be provided (use narrative explanation sheet if necessary).

e. Have any variances (264.193(g)) from secondary containment been requested for existing tank systems? ___Yes ___No

f. Are leak tests meeting the requirements of 264.191(b)(5) conducted annually for non-enterable underground tanks without secondary containment? ___Yes ___No

g. Are leak tests as described above, or internal inspections or other tank integrity examinations done by an independent, qualified, registered P.E. annually for all other types of tanks systems and ancillary equipment? ___Yes ___No

h. Are records of the results of leak tests or other tank integrity assessments kept on file? ___Yes ___No

i. Were any tank systems or components found to be leaking or unfit for use as a result of leak tests or other assessments?

NOTE: If the answer is yes, refer to item #8 - Response to leaks or spills and disposition of leaking or unfit-for-use tank systems (264.196).

Comments:

6. Secondary containment systems (264.193(b)-(f)).

a. Has secondary containment been provided for any tank system or component (see Items 4.d., 5.d, and 9.f)? ___Yes ___No

b. If yes, has the containment system been:

(1) Designed, installed, and operated to prevent any migration of wastes or accumulated liquid out of the system to the soil, ground water, or surface water at any time during its use? ___Yes ___No

(2) Capable of detecting and collecting releases and accumulated liquids until the collected material is removed? ___Yes ___No

RCRA INSPECTION REPORT
LAND DISPOSAL RESTRICTIONS CHECKLIST

Facility ID#: FLD 984 171 694 Date of Inspection: 12/15/93

Facility Name: SAFETY - KLEEN / MEDLEY

Facility Address: 8755 N.W. 95TH STREET

MEDLEY, FL 33178

Facility Phone #: 305 884-0123 Facility Contact: JORGE CARVAJAL

Contact's Title: BRANCH MANAGER

Persons present for Inspection: TIM GRAY, DENISE HOKENESS - FDEP

JORGE CARVAJAL, THOMAS SANDS - S-K

Date and Time Inspection Began: 10:30 AM

Date and Time Inspection Ended: 1:15 PM

1. (a) Describe the generator's restricted waste streams (use the LDR Treatment Standards list) and the destination of each.

D001 - LIQUID AND DUMPSTER MUD
F002 - PERCHLOROETHYLENE
F003/F005 - PAINT RELATED WASTE
D008/D039 - WASTE ANTI-FREEZE
} TAMPA, FL / LEXINGTON, SC

Revision #1
Date 3-12-91

(b) Are the wastes correctly identified? (You may need to review TOC, TSS, HOC, TCLP, PFLT, 3rd Thirds WW, NWW, Technology Acronyms, Tables 268.41, 268.42 & 268.43.) [268.7 Notices for 3rd Third includes variance until 8-8-90: Minimum Technology]

YES

(c) Is the generator storing restricted waste on site?

YES

Is the generator complying with 268.50?

YES

Is the generator complying with 262.34 as required by 268.50(a)(1)?

YES

Are the wastes identified correctly?

YES

Revision #1
Date 3-12-91

Have LDR wastes been stored over 90 days (generator)?

PERMITTED FACILITY - H013-21631

If the facility is a TSD and has been storing LDR wastes for over a year, can the TSD prove (if challenged) that the reason for such storage is solely for the purpose of accumulation of such quantities of hazardous waste as are necessary to facilitate proper recovery, treatment or disposal?

N/A

(d) Does the generator have a case-by-case extension or a variance? (specify)

N/A

II. Waste with Treatment Standards

(a) Do the Notifications required by 268.7 include:

EPA Hazardous Waste #: YES

Applicable Treatment Standards or proper reference for wastes other than F001-F005, F020-F023, F026-F028, and California List (3rd Third Rule):

Manifest Document #'s: YES

Waste Analysis Data, where available: YES

Certification Statement if Generator is Claiming to meet Treatment standards:

Revision #1
Date 3-12-91

Date Waste is Subject to Prohibitions if
Subject to a Case-By Case Extension or Variance: _____

III. Does the generator maintain the above records on-site for five (5) years?

YES

IV. Additional Notes and Comments:
(Check for soft hammer compliance prior to May 8, 1990.)

Revision #1
Date 3-12-91

Florida Department of
Environmental Protection

Lawton Chiles
Governor

Southeast District
P.O. Box 15425
West Palm Beach, Florida 33416

Virginia B. Wetherell
Secretary

HAZARDOUS WASTE INSPECTION EXIT INTERVIEW

FACILITY: SAFETY-KLEEN/MEDLEY DATE: 12/15/93 TIME: 10:30AM

INTERVIEW PARTICIPANTS: TIM GRAY, DENISE HOLNESS, JORGE CARVAJAL

This exit interview is the Department's attempt to advise you early in the process of possible violations of Florida Administrative Code Chapter 17-730, which adopts 40 CFR Parts 260-266 by reference. It is possible that the list of violations noted (checked) is incomplete. After a complete internal file review by the Department an inspection report will be finalized. In most cases, the violations noted by the inspector will not change in the final report, therefore, you are advised to immediately begin correcting these deficiencies noted below.

Please also be aware that the Department has signed an enforcement agreement with the U.S. Environmental Protection Agency which calls for the assessment and collection of monetary penalties when violations, such as these, are noted. While your quick response in correcting the violations may not reduce the calculated penalties, continued non-compliance may result in greater penalty liability.

The following violations have been tentatively identified:

___ 1. Hazardous Waste Determination [262.11].
___ 2. Notification as a generator [262.12].
___ 3. Manifest Deficiencies [262 Subpart B].
___ 4. Recordkeeping [test results, manifest, biennial report].
___ 5. Personnel Training [265.16; 262.34(d)].
___ 6. Contingency Plan [265 Subpart D; 262.34(d)(5)].
___ 7. Preparedness and prevention [265 Subpart C; 262.34(d)(4)].
___ 8. Container Requirements [265 Subpart I; 262.34(d)(2)].
___ 9. Tank requirements [265 Subpart J].
___ 10. Exceeding accumulation storage time [262.34(a); 262.34(d)].
___ 11. Accumulation start date & labels on containers [262.34(a)(2)&(3)].
___ 12. Accumulating >1000 kg without meeting SQG standards [261.5].
___ 13. Not ensuring delivery of HW to a proper TSD facility [261.5].
___ 14. Notification as a TSD facility [264.11].
___ 15. Treatment, storage or disposal without a permit [F.A.C. 17-730].
___ 16. Ground water monitoring [265 Subpart F].
___ 17. Security Requirements [265.14].
___ 18. Storing HW less than 50 feet from the property line [265.176].
___ 19. "No Smoking" signs, ignitable/reactive requirements [265.17].
___ 20. Closure/Post-closure [265 Subpart G].
___ 21. Financial Responsibility [264 Subpart H].
___ 22. Failure to comply with the provisions of a Department Issued Permit or with the provisions of the Consent Order.
___ 23. Other _____

COMMENTS: NO APPARENT HAZARDOUS WASTE VIOLATIONS WERE OBSERVED. FACILITY WAS NEAT AND ORDERLY AND PERSONNEL WERE COOPERATIVE.

RECEIPT ACKNOWLEDGED BY

Tim Gray
INVESTIGATOR

Printed on recycled paper.

Florida Department of Environmental Protection

Lawton Chiles
Governor

Southeast District
P.O. Box 15425
West Palm Beach, Florida 33416

Virginia B. Wetherell
Secretary

HAZARDOUS WASTE INSPECTION REPORT

1. INSPECTION REPORT ___Complaint X Routine ___Follow-up X Permitting

FACILITY NAME SAFETY-KLEEN/MEDLEY DEP/EPA ID FLD 984171694

ADDRESS 8755 N.W. 95TH STREET

MAILING ADDRESS MEDLEY, FL. 33178

COUNTY DADE PHONE (305) 884-0123 DATE 12/15/93 TIME 10:30AM

TYPE OF FACILITY:

Generator
___ Cond. Exempt S.Q.G.
___ Small Quantity
X Generator
___ Non-Handler

Storage
X Container
X Tank
___ Waste Pile
___ Surface Impoundment

Treatment
___ Tank
___ Land Treatment
___ Thermal
___ Chef/Phys/Bio.
___ Incinerator
___ Surface Impoundment

Transporter
X Transporter
X Transfer Station
___ Non-Handler

Disposal
___ Landfill
___ Surface Impoundment
___ Waste Pile

2. Applicable Regulations:

___ 40 CFR 261.5 X 40 CFR 262 X 40 CFR 263 X 40 CFR 264

___ 40 CFR 265 ___ 40 CFR 266 X 40 CFR 268

3. Responsible Official: (Name & Title)
JORGE CARVAJAL - BRANCH MANAGER

4. Survey Participants & Principal Inspector:
TIMOTHY GRAY, DENISE HOLNESS - FDEP
JORGE CARVAJAL, THOMAS SANDS - SAFETY-KLEEN

5. Facility Latitude: 25° 51' 34" Longitude: 80° 20' 30"

6. Type of Ownership: FEDERAL STATE COUNTY MUNICIPAL (PRIVATE)

7. Permit No.: HO13-216311 Date Issued: 12/02/92 Expiration Date: 12/02/97

8. Pre-arranged Inspection: ___Yes X No.

Printed on recycled paper.

SE

MAR 31 1994

HAZARDOUS WASTE

STATE OF FLORIDA
TRANSFER FACILITY NOTIFICATION FORM

This form must be completed as required in Florida Administrative Code Rule 17-730.171(3) by transfer facilities storing hazardous waste in accordance with Florida Administrative Code Rule 17-730.171. All information must be typed or printed clearly.

I. Transporters Identification:

Company Name: Safety-Kleen Corporation

EPA ID No.: ILD 984 908 202, FLD 984 171 694, SCD 007 995 488

Company Mailing Address: 1000 North Randall Road
Elgin, IL. 60123

Principal Contact: Della Ridley

Phone Number: 404-434-1572

RECEIVED
MAY 6 1994
DEPT OF ENV PROTECTION
WEST PALM BEACH

II. Transfer Facility Identification

Name of Facility: Safety-Kleen Corporation

Street Address: 8755 NW 95th Street
Medley , Florida, 33178

Latitude: 25°51'34"N Longitude: 80°20'30"W

County: Dade

Waste Codes: SEE ATTACHED TABLE

Storage Volume: 6,912 gallons (estimated maximum)

NOTE! Safety-Kleen Corporation transports materials using trucks based at various locations throughout the country and each location has a different US EPA ID number. In addition, other transport companies are periodically used. The transporters who will use this transfer facility include, but are not limited to those noted in item I above.

III. Certification

I CERTIFY UNDER PENALTY OF LAW THAT THE ABOVE INFORMATION IS ACCURATE AND COMPLETE. AS THE OWNER OR OPERATOR OF THE ABOVE REFERENCED HAZARDOUS WASTE TRANSFER FACILITY, I ALSO CERTIFY THAT THIS FACILITY IS IN COMPLIANCE WITH ALL PROVISIONS OF FAC. 17-730.171.

Della Ridley — Southeast Region Environmental Manager
(Typed Name) (Title)

Della Ridley — 3/17/94
(Signature of Authorized Representative) (Date Signed)

Please complete this form and mail to the following address:

Florida Department of Environmental Protection
Hazardous Waste Management Section
2600 Blair Stone Road
Tallahassee, Florida 32399-2400

Attached Table
Safety-Kleen Corporation
Transfer Facility Waste Codes

D-Codes:

D001, D002, D004, D005, D006, D007, D008, D009, D010, D011, D018, D019, D021, D022, D023, D024, D025, D026, D027, D028, D029, D030, D032, D033, D034, D035, D036, D037, D038, D039, D040, D041, D042, D043.

F-Codes:

F001, F002, F003, F004, F005, F006, F019, F024, F039.

K-Codes:

K002, K003, K004, K005, K006, K009, K010, K011, K013, K014, K015, K016, K019, K022, K029, K030, K031, K048, K049, K050, K051, K052, K085, K086, K095, K096.

U-Codes:

U001, U002, U003, U009, U031, U037, U043, U044, U051, U052, U055, U056, U057, U068, U069, U070, U071, U072, U075, U077, U078, U079, U080, U083, U084, U107, U108, U110, U112, U113, U117, U118, U121, U125, U140, U154, U159, U161, U162, U165, U169. U171, U188, U191, U196, U210, U211, U213, U220, U226, U227, U228, U239, U359.

IN THE CIRCUIT COURT OF THE SECOND JUDICIAL CIRCUIT
IN AND FOR LEON COUNTY, FLORIDA

STATE OF FLORIDA DEPARTMENT
OF ENVIRONMENTAL REGULATION

PLAINTIFF,

vs. Case No. 92-769

SAFETY KLEEN CORPORATION,

DEFENDANT.
_____/

FEB 4 1994

HAZARDOUS WASTE
PERMITTING

CONSENT FINAL JUDGMENT

This matter came before the Court on the attached Consent Final Judgment, fully executed by plaintiff and defendant. The Court having read the pleadings, and being otherwise advised in the premises, it is hereby

ORDERED AND ADJUDGED that:

1. The Consent Final Judgment is adopted as the Final Judgment of this Court.

2. The Court shall retain jurisdiction to enforce the terms of the Consent Final Judgment.

DONE AND ORDERED in chambers in Tallahassee, Leon County, Florida, on this 26th day of January, 1994.

Judge of the Circuit Court

Copies to: Agusta P. Posner
Deborah A. Getzoff

IN THE CIRCUIT COURT OF THE SECOND JUDICIAL CIRCUIT
IN AND FOR LEON COUNTY, FLORIDA

STATE OF FLORIDA DEPARTMENT
OF ENVIRONMENTAL REGULATION,

Plaintiff, CASE NO. 92-769

vs.

SAFETY-KLEEN CORPORATION,

Defendant.
_____/

CONSENT FINAL JUDGMENT

Plaintiff, State of Florida Department of Environmental Regulation ("Department"), and Defendant, Safety-Kleen Corporation ("Safety-Kleen"), in order to resolve the above-captioned case without the need for further litigation, hereby agree as follows:

1. The Department is the regulatory agency of the State of Florida charged with the duty and authority to administer and enforce Chapter 403, Florida Statutes (F.S.), and the regulations promulgated thereunder. The Department brought a civil action to remedy alleged violations of state hazardous waste management regulations by Safety-Kleen.

2. Safety-Kleen is a corporation organized under the laws of the State of Wisconsin and is duly registered with the Florida Secretary of State. Safety-Kleen is a person within the meaning of §§403.031(5) and 403.703(4), F.S. Safety-Kleen conducts a nationwide business which markets, collects and re-cycles solvent based chemical cleaners.

Safety-Kleen serves businesses such as gas stations, auto repair shops, car dealers, dry cleaners, and machine shops. In addition, Safety-Kleen transports hazardous paint-related wastes.

3. Safety-Kleen is permitted by the Department, pursuant to authority delegated by the U.S. Environmental Protection Agency (EPA), to operate or to close hazardous waste tanks and container storage facilities in several Florida locations, including the following:

(i) 4426 Entrepot Boulevard, Tallahassee, Leon County, Florida 32310, EPA identification number FLD-982133159 ("Tallahassee Facility I")

(ii) 3082 West Tharpe Street, Tallahassee, Leon County, Florida, EPA identification number FLD-000776773 ("Tallahassee Facility II")

(iii) 505 Plumosa Drive, Altamonte Springs, Seminole County, Florida, 32701, EPA identification number FLD-097837983 ("Altamonte Springs Facility")

(iv) 5610 Alpha Drive, Boynton Beach, Palm Beach County, Florida, EPA identification number FLD-984167791 ("Boynton Beach Facility")

(v) 1855 S.W. 4th Avenue, Delray Beach, Palm Beach County, Florida, EPA identification number FLD-000776757 ("Delray Beach Facility")

(vi) 7875 N.W. 54th Street, Miami, Dade County, Florida 33166 ("Miami Facility")

(vii) 19200 Peachland Boulevard, Port Charlotte, Charlotte County, Florida 33949, EPA identification number FLD-000776716 ("Port Charlotte Facility")

(viii) 4701 N. Manhattan Street, Tampa, Hillsborough County, Florida, EPA identification number FLD-049557408 ("Tampa Facility II")

(ix) 161 Industrial Loop, South, Orange Park, Clay County, Florida, EPA identification number FLD-980847214 ("Orange Park Facility")

(x) 5309 24th Avenue South, Tampa, Hillsborough County, Florida, EPA Identification Number FLD-980847271 ("Tampa Facility I")

(xi) 600 Central Park Drive, Sanford, Seminole County, Florida, EPA Identification Number FLD-984171165 ("Sanford Facility")

(xii) 8755 N.W. 95th Street, Medley, Dade County, Florida, EPA Identification Number FLD-9844171694 ("Medley Facility")

4. The Department periodically conducts inspections of Safety-Kleen's permitted facilities and reviews permit applications. In the course of implementing its regulatory program with respect to Safety-Kleen's operations, the Department has discovered conditions or practices which the Department contends are violations of various hazardous waste regulations or permitting requirements, as set forth in the Complaint filed in this action on or about February 28, 1992.

5. Since the Complaint was filed, the Department discovered additional conditions or practices which it alleges are violations, in particular:

(i) unpermitted installation of a storage tank at the Jacksonville facility, as set forth in Warning Letter #WL92-0314HW10NED dated June 17, 1992;

(ii) conditions and practices at the Port Charlotte facility as set forth in inspection reports dated 12/3/92; 12/14/92; and 2/1/93;

(iii) delays in submitting information to complete the closure/post-closure permit application for the Miami facility, as set forth in Notices of Deficiency dated August 14, 1992, and June 1, 1993.

6. In addition to the above-listed violations, since the complaint was filed, Safety-Kleen has self reported to the Department potential violations at a number of its facilities, which are listed on Exhibit 1 attached to this Consent Final Judgment.

7. Safety-Kleen acknowledges the Department's authority pursuant to §§403.061; 403.062; 403.121; 403.141; 403.151; 403.161; 403.707; 403.722, F.S.; Rule 17-730.220, F.A.C.; Rule 17-730.260, F.A.C.; 40 CFR 264.112; 40 CFR 264.113; 40 CFR 264.118; 40 CFR 270.10; and 40 CFR 270.14(b) to take enforcement action for late or deficient closure permit applications; for failure to implement groundwater monitoring programs in a complete and timely manner; and for failure to implement corrective actions to remediate soil or groundwater contamination in a complete and timely manner.

8. Entry into this Consent Final Judgment shall not be construed to be an admission by Safety-Kleen of the truth of any of the allegations of the Department's Complaint, or an admission that it has violated any statutes or rules regarding hazardous waste management.

WHEREFORE, Safety-Kleen shall forthwith comply in a complete and timely manner with all applicable requirements of Chapter 403, Florida Statutes, and Chapter 17-730 Florida Administrative Code, including all sections of 40 Code of Federal Regulations Parts 260 through 270 adopted by reference, and all requirements relating to facility closure and corrective action for soil or groundwater contamination.

Safety-Kleen shall remit to the Department $260,000 in civil penalties and costs to resolve the violations set forth in the Complaint and in paragraph 5 and in the list of violations set forth in the document attached as Exhibit 1. Payment shall be made within 60 days in the following manner: one check for $200,000 shall be made payable to the Pollution Recovery Fund and one check for $60,000 shall be made made payable to the Water Quality Assurance Trust Fund. Both checks shall be sent to the Hazardous Waste Administrator, Department of Environmental Protection, Twin Towers Office Building, 2600 Blair Stone Road, Tallahassee, Florida, 32399-2400, and shall include a memo notation of the OGC number of this case (92-0086C.)

Scott E. Love

For Safety-Kleen, Inc.
1000 N. Randall Rd.
Elgin, IL 60213

Date: 1/12/94

Agustin P. Posner

For State of Florida Department
Of Environmental Protection
2600 Blair Stone Road
Tallahassee, FL 32399

BRANCH	DATE	DESCRIPTION OF VIOLATIONS
Orange Park	06-28-93	Non-Compliance with Transporter Requirements - 1 Customer
Orange Park	04-13-93	Unmanifested Waste Report
Boynton Beach	09-14-93	Non- Compliance with Transporter Requirements - 1 Customer
Boynton Beach	06-28-93	Non-Compliance with Transporter Requirements - 3 Customers
Port Charlotte	06-28-93	Non-Compliance with Transporter Requirements - 2 Customers
Port Charlotte	06-04-93	Failed to perform all required inspections in one day Wet Dumpster replaced without minor modification request
Port Charlotte	04-06-93	Unmanifested Waste Report
Port Charlotte	02-25-93	Unmanifested Waste Report
Tampa	10-12-93	Non-Compliance with Transporter Requirements - 2 Customers
Tampa	09-24-93	Non-Compliance with Transporter Requirements - 4 Customers
Tampa	06-29-93	Non-Compliance with Transporter Requirements - 4 Customer
Tampa	06-04-93	Stored Hazardous Waste over 10 days Insufficient Secondary Containment Volume
Tampa	08-12-93	Unmanifested Waste Report
Tampa	08-12-93	Unmanifested Waste Report
Tampa	07-28-93	Unmanifested Waste Report
Tampa	07-28-93	Unmanifested Waste Report
Tampa	07-28-93	Unmanifested Waste Report
Tampa	06-29-93	Unmanifested Waste Report
Tampa	01-19-93	Unmanifested Waste Report
Tallahassee	10-29-93	Failure to perform all required inspections in one day
Tallahassee	10-14-92	Unmanifested Waste Report
Sanford	09-16-93	Unmanifested Waste Report
Sanford	09-07-93	Unmanifested Waste Report
Sanford	08-03-93	Unmanifested Waste Report
Altamonte Springs	08-07-93	Unmanifested Waste Report
Altamonte Springs	12-31-92	Unmanifested Waste Report
Altamonte Springs	12-16-92	Unmanifested Waste Report
Medley	12-30-92	Unmanifested Waste Report

EXHIBIT 1

Florida Department of
Environmental Protection

Southeast District
P.O. Box 15425
West Palm Beach, Florida 33416

Lawton Chiles
Governor

Virginia B. Wetherell
Secretary

NOV 2 4 1993

CERTIFIED MAIL
RETURN RECEIPT REQUESTED

Dade County
HW-Safety Kleen Corp., Medley

Mr. Victor L. San Agustin, P.E.
Regional Environmental Engineer
Safety-Kleen Corporation
129 South Kentucky Ave., Suite 701
Lakeland, Florida 33801

Re: Request for Modification of Hazardous Waste Operating Permit
Safety-Kleen/Medley, HO 13-216311 (Submitted on October 19, 1993)

Dear Mr. San Agustin:

The Department has reviewed your request for modification, as referenced. This information enables the Department to grant the following Class I, minor modifications:

* Safety-Kleen may reclassify and manage the spent Immersion Cleaner 609 and non-perchloroethylene dry cleaning wastes as transfer wastes. Non-perchloroethylene dry cleaning wastes refer to spent mineral spirits (spent parts washer solvent, D001) and spent trichloro-trifluoroethane (F002). The Transfer/Fluid Recovery Service (FRS) wastes are to be managed as a segregated transfer facility waste stream. The FRS transfer wastes will be stored within the container storage area but apart from the wastes which have their manifests terminated at the facility. The facility will manage the FRS wastes in accordance with F.A.C. Rule 17-730.171 and ensure that the transfer (FRS) wastes are maintained within a permanently designated, distinctly separate area. All containers will be managed in accordance with the plan approved in Part IIB, Attachment II.B.1, revision 2-12/06/91 of the application. Any containers used for the transportation of hazardous wastes must be in compliance with applicable regulations in 49 CFR Parts 173, 178 and 179.

* Safety-Kleen may accept spent cyclonic filters with spent Premium Solvent. The spent filters will be transported from the generators' facilities to the Boynton Beach service center in accordance with the applicable Department of Transportation regulations on hazardous materials under 49 CFR parts 173, 178 and 179. Upon arriving at the service center the spent cyclonic filters will be placed in the dumpster sediment, satellite accumulation container(s). The containers will subsequently be handled as hazardous wastes and stored in the container storage area in accordance with the plan approved in Part IIB, Attachment II.B.1, revision 2-12/06/91 of the application.

Printed on recycled paper.

This letter must be attached to the original permit and become part of the permit.

A person whose substantial interests are affected by this modification may petition for an administrative proceeding (hearing) in accordance with Section 120.57, Florida Statutes. The petition must contain the information set forth below and must be filed (received) in the Office of General Counsel of the Department at 2600 Blair Stone Road, Tallahassee, Florida 32399-2400, within 14 days of receipt of this Modification. Petitioner shall mail a copy of the petition to the applicant at the address indicated above at the time of filing. Failure to file a petition within this time period shall constitute a waiver of any right such person may have to request an administrative determination (hearing) under Section 120.57, Florida Statutes.

The Petition shall contain the following information:
(a) The name, address, and telephone number of each petitioner, the applicant's name and address, the Department Permit File Number and the county in which the project is proposed;
(b) A statement of how and when each petitioner received notice of the Department's action or proposed action;
(c) A statement of how each petitioner's substantial interests are affected by the Department's action or proposed action;
(d) A statement of the material facts disputed by Petitioner, if any;
(e) A statement of facts which petitioner contends warrant reversal or modification of the Department's action or proposed action;
(f) A statement of which rules or statutes petitioner contends require reversal or modification of the Department's action or proposed action; and
(g) A statement of the relief sought by petitioner, stating precisely the action petitioner wants the Department to take with respect to the Department's action or proposed action.

If a petition is filed, the administrative hearing process is designed to formulate agency action. Accordingly, the Department's final action may be different from the position taken by it in this modification. Persons whose substantial interests will be affected by any decision of the Department with regard to the application have the right to petition to become a party to the proceeding. The petition must conform to the requirements specified above and be filed (received) within 14 days of receipt of this notice in the Office of General Counsel at the above address of the Department. Failure to petition within the allowed time frame constitutes a waiver of any right such person has to request a hearing under Section 120.57, F.S., and to participate as a party to this proceeding. Any subsequent intervention will only be at the approval of the presiding officer upon motion filed pursuant to Rule 28-5.207, F.A.C.

This modification is final and effective on the date filed with the Clerk of the Department unless a petition is filed in accordance with the above paragraphs or unless a request for extension of time in which to file a petition is filed within the time specified for filing a petition and conforms to Rule 17-103.070, F.A.C. Upon timely filing of a petition or a request for an extension of time this modification will not be effective until further Order of the Department.

When the Order (Modification) is final, any party to the Order has the right to seek judicial review of the Order pursuant to Section 120.68, Florida Statutes, by the filing of a Notice of Appeal pursuant to Rule 9.110, Florida Rules of Appellate procedure, with the Clerk of the Department in the Office of General Counsel, 2600 Blair Stone Road, Tallahassee, Florida 32399-2400; and by filing a copy of the Notice of Appeal accompanied by the applicable filing fees with the appropriate District Court of Appeal. The Notice of Appeal must be filed within 30 days from the date the Final Order is filed with the Clerk of the Department.

Should you have any questions, please contact Knox Mckee or Denise Holness of this office, telephone 407/433-2650.

Executed in West Palm Beach, Florida

STATE OF FLORIDA DEPARTMENT
OF ENVIRONMENTAL PROTECTION

Mary E.S. Williams
Director of District Management

MESW/DOH

cc: Satish Kastury, DEP/Tallahassee
Alan Farmer, EPA/Atlanta
File/Report Coordinator

CERTIFICATE OF SERVICE

This is to certify that this **NOTICE OF PERMIT MODIFICATION** and all copies were mailed before the close of business on NOV 2 4 1993 to the listed persons.

FILING AND ACKNOWLEDGMENT: FILED, on this date, pursuant to §120.52, Florida Statutes, with the designated Department Clerk, receipt of which is hereby acknowledged.

Andrell Mafie
Clerk

NOV 2 4 1993
Date

Florida Department of
Environmental Protection

Southeast District
P.O. Box 15425
West Palm Beach, Florida 33416

Lawton Chiles
Governor

Virginia B. Wetherell
Secretary

OCT 11 1993

CERTIFIED MAIL
RETURN RECEIPT REQUESTED

Dade County
HW-Safety Kleen Corp., Medley

Mr. Victor L. San Agustin, P.E.
Regional Environmental Engineer
Safety-Kleen Corporation
129 South Kentucky Ave., Suite 701
Lakeland, Florida 33801

Re: Request for Modification of Hazardous Waste Operating Permit
Safety-Kleen/Medley, HO 13-216311 (Submitted on June 15, 1993)

Dear Mr. San Agustin:

The Department has reviewed your request for modification, as referenced. The additional information you provided in your August 2, 1993 correspondence has also been considered. Based upon the information provided the Department is approving the following Class I, minor modifications:

* Safety-Kleen may store both virgin and spent Actrel parts cleaning solvent at the Medley service center. Actrel is similar to parts cleaning solvents currently marketed by the facility. Virgin Actrel has a flashpoint of 212°F and consists primarily of paraffin compounds with C_{12}-C_{14} chains. The spent Actrel solvent will be managed as a hazardous waste until determined non-hazardous (40 CFR 262.11).

* Safety-Kleen may store spent Actrel filters. The filters will be transported from the generators' facilities to the Medley service center in accordance with the applicable Department of Transportation regulations on hazardous materials under 49 CFR parts 173, 178, and 179. Upon arriving at the service center the spent Actrel filters will be placed in the dumpster sediment, satellite accumulation container(s). The containers must subsequently be handled as hazardous wastes and stored in the Container Storage Area in accordance with the plan approved in Part IIB, Attachment II.B.1 of the application (Date of Issue: December 2, 1992).

* The Safety-Kleen Corporation, International Headquarters, address has changed to the following:

  1000 North Randall Road
  Eglin, Illinois 60123-7857

This letter must be attached to the original permit and become part of the Permit.

A person whose substantial interests are affected by this modification may petition for an administrative proceeding (hearing) in accordance with Section 120.57, Florida Statutes. The petition must contain the information set forth below and must be filed (received) in the Office of General Counsel of the Department at 2600 Blair Stone Road, Tallahassee, Florida 32399-2400, within 14 days of receipt of this Modification. Petitioner shall mail a copy of the petition to the applicant at the address indicated above at the time of filing. Failure to file a petition within this time period shall constitute a waiver of any right such person may have to request an administrative determination (hearing) under Section 120.57, Florida Statutes.

The Petition shall contain the following information:
(a) The name, address, and telephone number of each petitioner, the applicant's name and address, the Department Permit File Number and the county in which the project is proposed;
(b) A statement of how and when each petitioner received notice of the Department's action or proposed action;

Printed on recycled paper.

(c) A statement of how each petitioner's substantial interests are affected by the Department's action or proposed action;
(d) A statement of the material facts disputed by Petitioner, if any;
(e) A statement of facts which petitioner contends warrant reversal or modification of the Department's action or proposed action;
(f) A statement of which rules or statutes petitioner contends require reversal or modification of the Department's action or proposed action; and
(g) A statement of the relief sought by petitioner, stating precisely the action petitioner wants the Department to take with respect to the Department's action or proposed action.

If a petition is filed, the administrative hearing process is designed to formulate agency action. Accordingly, the Department's final action may be different from the position taken by it in this modification. Persons whose substantial interests will be affected by any decision of the Department with regard to the application have the right to petition to become a party to the proceeding. The petition must conform to the requirements specified above and be filed (received) within 14 days of receipt of this notice in the Office of General Counsel at the above address of the Department. Failure to petition within the allowed time frame constitutes a waiver of any right such person has to request a hearing under Section 120.57, F.S., and to participate as a party to this proceeding. Any subsequent intervention will only be at the approval of the presiding officer upon motion filed pursuant to Rule 28-5.207, F.A.C.

This modification is final and effective on the date filed with the Clerk of the Department unless a petition is filed in accordance with the above paragraphs or unless a request for extension of time in which to file a petition is filed within the time specified for filing a petition and conforms to Rule 17-103.070, F.A.C. Upon timely filing of a petition or a request for an extension of time this modification will not be effective until further Order of the Department.

When the Order (Modification) is final, any party to the Order has the right to seek judicial review of the Order pursuant to Section 120.68, Florida Statutes, by the filing of a Notice of Appeal pursuant to Rule 9.110, Florida Rules of Appellate procedure, with the Clerk of the Department in the Office of General Counsel, 2600 Blair Stone Road, Tallahassee, Florida 32399-2400; and by filing a copy of the Notice of Appeal accompanied by the applicable filing fees with the appropriate District Court of Appeal. The Notice of Appeal must be filed within 30 days from the date the Final Order is filed with the Clerk of the Department.

Should you have any questions, please contact Denise Holness or Knox McKee of this office, telephone 407/433-2650.

Executed in West Palm Beach, Florida.

STATE OF FLORIDA DEPARTMENT
OF ENVIRONMENTAL PROTECTION

Mary E.S. Williams
Director of District Management

JKM

Copies furnished to:

Satish Kastury, DEP/Tallahassee
Alan Farmer, EPA/Atlanta
File/Report Coordinator

CERTIFICATE OF SERVICE

This is to certify that this **NOTICE OF PERMIT MODIFICATION** and all copies were mailed before the close of business on OCT 11 1993 to the listed persons.
Clerk Stamp

FILING AND ACKNOWLEDGMENT

FILED, on this date, pursuant to §120.52, Florida Statutes, with the designated Department Clerk, receipt of which is hereby acknowledged.

Audrell Mayfield (Clerk) OCT 11 1993 (Date)

Florida Department of
Environmental Protection

Southeast District
P.O. Box 15425
West Palm Beach, Florida 33416

Lawton Chiles
Governor

Virginia B. Wetherell
Secretary

JUL 19 1993

CERTIFIED MAIL
RETURN RECEIPT REQUEST

Dade County
HW-Safety-Kleen/Medley

Mr. Victor L. San Agustin, P.E.
Regional Environmental Engineer
Safety-Kleen Corporation
129 South Kentucky Ave., Suite 701
Lakeland, Florida 33801

Re: Request for Modification of Hazardous Waste Operating Permit (Submitted on June 15, 1993). Safety-Kleen/Medley, Operating Permit Number HO 13-216311, Facility Number FLD 984171694.

Dear Mr. San Agustin:

The Department has reviewed your request for modification, as referenced. The information which you have provided has given rise to several areas of concern. Prior to the issuance of a permit modification to change facility waste streams and waste management practices, the following comments must be addressed:

1. Accompanying the modification request were instructions for updating the permit application. Replacement pages were submitted as revisions to the original permit application pages. Revision 3 - 06/11/93, p. I.D.2-2, paragraph one, states, "Used parts washer premium solvent is transported from the customer as a non-hazardous waste and only becomes hazardous once it is mixed in the used parts washer solvent tank." The revision can not be accepted as submitted. Please refer to the Department's response to Safety-Kleen's request for modification (submitted on March 15, 1993). The response letter, dated May 3, 1993, which must be attached to the original permit and becomes part of that permit, allowed for the following modification:

"Safety-Kleen may accept waste 'Premium Solvent' at the Medley service center. The waste 'Premium Solvent' will be mixed in the wet dumpster (solvent return receptacle), located in the return / fill area, when it arrives at the service center. The Department has not yet determined the regulatory status of the waste 'Premium Solvent'. Until the Department makes such a determination Safety-Kleen is to transport and handle the waste 'Premium Solvent' in the same manner as other hazardous wastes."

Printed on recycled paper.

It is the generator's responsibility (40 CFR, Part 262.11) to determine whether spent solvents are hazardous through process knowledge or testing. The generator is responsible for making such a determination for the waste "Premium Solvent" and arrange for proper disposal. Rewording of p. I.D.2-2, paragraph one and p. II.A.5-1, paragraph one to reflect the Department's position on hazardous waste determination is required prior to the acceptance of replacement pages for Attachment I.D.2. and Attachment II.A.5, respectively.

2. On April 26, 1993, the Department received the facility's request for modification identifying "cartridge filters" as an additional fraction of the Fluid Recovery Service (FRS), transfer, waste stream. The Department's response letter, dated May 25, 1993, which must be attached to the original permit and becomes part of that permit, allowed for the following modification:

"Safety-Kleen may accept waste cartridge filters and manage them as a transfer waste under the Fluid Recovery Service (FRS) program. Any containers used for the management and transportation of hazardous wastes must be in compliance with applicable regulations in 40 CFR Part 264 and 49 CFR Parts 173, 178, and 179."

Revision 3 - 06/11/93, p. I.D.2-4, paragraph two, states, "The filters are placed in the waste sludge satellite accumulation container located at the return / fill shelter wet dumpster." The revision can not be accepted as submitted. The revision provides information, in addition to that previously submitted, regarding the management of the filters once they reach Safety-Kleen's, Medley, facility. The revision suggests that the filter cartridges are to be placed in the satellite accumulation containers. The containers are designated for dumpster sediment removed from drum washers. The proposed management of the **(permitted transfer waste)** cartridge filters would violate specific condition number fifteen (#15) and number thirty-six (#36), of the above referenced permit. Revision 3 - 06/11/93, p. I.D.2-3 and Revision 2 - 06/11/93, p. II.A.5-7 should be revised. The revision should include the waste cartridge filters as one of the "examples of the types of wastes" managed as FRS wastes, a segregated transfer facility waste stream.

Revision 2 - 06/11/93, P. II.A.4(b)-2, paragraph one, and Revision 2 - 06/11/93, p. II.A.5-5, paragraph one fail to include that sludge in the wet dumpster is put into satellite accumulation drums next to the wet dumpster units.

3. Revision 2 - 06/11/93, p. II.A.6-4, paragraph one, should state,"...and label it as hazardous waste with the appropriate accumulation start date." In the same paragraph it is stated that the container is left with the customer pending the results of laboratory tests. Please provide the anticipated turnaround time for the analysis of the samples taken by the service representative.

   Paragraph 2 states, "If the laboratory analysis reveals that the sampled waste is not contaminated, Safety-Kleen will accept the waste from the customer." The statement is confusing since the Safety-Kleen facility is permitted to manage D001 through D043 waste types. What is the definition of "contaminated" as used in the statement?

   Paragraph 3 states, "If the discrepancy is not resolved within 15 days after receiving the waste, Safety-Kleen will immediately submit to the Department a letter describing the discrepancy and attempts to reconcile it..." Please define the use of the word "discrepancy" in the statement. Within 15 days after who receives the waste?

4. The field screening of Safety-Kleen solvents, through visual and volumetric inspection, is a logical one. Revision 3 - 06/11/93, Page I.D.2-3, states, "This **closed loop** supplies Safety-Kleen with most of its solvent requirements; the resultant stabilized cost benefits are passed on to its customers. **Ownership of the solvent remains with Safety-Kleen**, the service center managers are accountable for the quantities of clean and used solvents handled by their branch operations." If this statement is true how can Safety-Kleen "reject the waste" or "reject the container of waste", as stated in Revision 2 - 06/11/93, pp. II.A.6-4 and II.A.6-5 and continue to make the claim of **"closed loop"** and **"ownership of the solvent remains with Safety-Kleen"**, as suggested in Revision 3 - 06/11/93, p. I.D.2-3? Field screening of Safety-Kleen solvents, through visual and volumetric inspection, should not be considered a reliable means of hazardous waste determination as required in 40 CFR, Part 262.11.

5. In future submittals of revised pages please indicate (i.e. highlight, underline) which language has been modified.

You are requested to submit a response to the above items. The response to these items, with any necessary revisions to the permit modification, is requested within fifteen (15) days of receipt of this letter. Please be aware that no decision on the modification of the permit can be rendered until the requested information is submitted and reviewed.

It should be noted that the mailing address for the Department of Environmental Protection (DEP) has been changed as follows:

State of Florida
Department of Environmental Protection
Southeast Florida District
Post Office Box 15425
West Palm Beach, Florida 33416

Please call me, at (407) 433-2650, if you have any questions.

Sincerely,

J. Knox McKee, Jr.
Supervisor, Hazardous Waste Section

JKM : jkm

cc: Satish Kastury, DEP/Tallahassee
Alan Farmer, EPA/Atlanta
Permitting File/WPB
Tim Grey, DEP/WPB
Hazardous Waste Archboard/WPB

Florida Department of Environmental Regulation

Twin Towers Office Bldg. • 2600 Blair Stone Road • Tallahassee, Florida 32399-2400

Lawton Chiles, Governor

Virginia B. Wetherell, Secretary

June 29, 1993

RECEIVED
'93 JUL 2 PM 3 06
FLA. DEPARTMENT OF
ENVIRONMENTAL REG.
WEST PALM BEACH

Pamela Presnell Garvin
Fowler, White et al
P.O. Box 11240
Tallahassee, Florida 32302

RE: State of Florida Department of Environmental Regulation v. Safety Kleen, Case No. 92-769, OGC No. 92-0086C

Dear Pam:

Thank you for your letter of June 18.

I have discussed your proposal with district and Tallahassee staff, and the consensus is that the offer we made in our letter of April 28, 1993, remains the bottom line: $200,000 in penalties and costs to resolve the violations alleged in the complaint and **NOT** including violations which have been discovered in inspections conducted after the filing of the complaint.

The South Florida District has indicated a willingness to accept the $50,000 offer which was made by Safety Kleen to resolve violations discovered at the Port Charlotte facility during an inspection in December, 1992. Therefore, we could settle the violations alleged in the present complaint, and the Port Charlotte allegations, for $250,000. If this offer is not accepted within two weeks of the date of this letter, the offer to include 1992 Port Charlotte violations will expire and will not be renewed.

Other violations which have been or may be alleged after the date of the complaint will not be considered or included in any offer to settle this present litigation, but will be the subject of independent enforcement actions. If outstanding violations involving Port Charlotte are not resolved by the acceptance of this offer, those violations will also be pursued in a separate action.

Sincerely,

Agusta P. Posner
Assistant General Counsel

Recycled Paper
Printed with Soy Based Inks

Florida Department of Environmental Regulation

Twin Towers Office Bldg. • 2600 Blair Stone Road • Tallahassee, Florida 32399-2400

Lawton Chiles, Governor

Virginia B. Wetherell, Secretary

June 29, 1993

RECEIVED
'93 JUL 2 PM 3
FLA. DEPARTMENT OF
ENVIRONMENTAL REG.
WEST PALM BEACH

Victor San Agustin, P.E.
Regional Environmental Manager
Safety Kleen Corporation
129 South Kentucky Avenue, Suite 701
Lakeland, Florida 33801

Dear Victor:

The Department issued a letter dated April 15, 1993 regarding Safety Kleen's new waste premium solvent. In that letter it was indicated that it is the generator's responsibility to determine whether spent solvents are hazardous through process knowledge or testing. In other words, the generator is responsible for making such a determination for the waste premium solvent and arranging for proper disposal. Please accept the Department's April 15, 1993 letter as the Department's final determination in regard to the proper handling of the waste premium solvent by the generator.

If you have further questions, please call Michael Hatcher or me at 904/488-0300.

Sincerely,

Michael Hatcher

for Satish Kastury
Environmental Administrator
Hazardous Waste Regulation

SK/mhs

cc: Waste Program Administrators
Alan Farmer, EPA/Atlanta
Diana Davis, FDEP/OGC

Recycled Paper
Printed with Soy Based Inks

safety-kleen®

RECEIVED
MAR 31 1993
Dept. of Environmental Reg.
West Palm Beach

Sent Via Federal Express
P383 205 876

March 26, 1993

Mr. Vivek Kamath
Division Of Waste Management
Florida Dept. Of Environmental Regulation
Southeast District
1900 S. Congress Ave., Suite A
West Palm Beach, FL 33406

Re: 8 Gallons Spill Last March 13, 1993
Sears Roebuck & Co. #8065 Opa-Locka, FL.
CESQG

Dear Mr. Kamath,

The following information is being submitted for an incident at the referenced facility pursuant to 40 CFR 263.30.

Facility Operator: Safety-Kleen Corp.
777 Big Timber Rd.
Elgin, IL 60123

Facility Location: Safety-Kleen Corp.
8755 NW 95th Street
Medley, FL. 33178

Location of Incident: Sears Roebuck & Co. #8065
13350 N.W. 42 Ave
Opa-Locka, FL 33054

EPA I.D. Number: CESQG

1. Report Date: March 26, 1993

2. Person Making Report: Juan Formoso

3. Date and Time of Incident: March 13, 1993 At 10:45 A.M.

4. Description of Incident: After servicing the customer, the sales representative was loading his handtruck into the storage compartment of the truck. Accidentally, he struck the 16 gallon drum with the handtruck and the material spilled on to the asphalted parking lot.

5. Extent of Personnel Injuries: None

6. Extent of Property Damage: None

7. Description and Estimated Quantity of Any Materials Released: Approximately 8 gallons of waste 105 solvent.

8. Human Health and Environmental Impact Assessment: None

9. Remedial Action Taken: Quickly the rep got absorbent pads from his truck to contain and absorb the spill. The waste was put back in the 16 gallon drum. No sewer or soil contact occurred. Waste generated was transported to our Medley Service Center and placed in one of our satellite accumulation drums and shipped to our Tampa Accumulation Center on March 24, 1993 under manifest number 00309, then it will be shipped to our Hebron, Ohio Recycle Center.

10. Estimated Quantity of Clean-Up Residue for Treatment of Disposal: 1-16 gallon drum containing approximately 8 gallons of absorbent materials and mineral spirits.

This letter also serves as notification that the spill has been cleaned up, and that all emergency equipment is again ready for use. Please contact me at (305) 884-0123 if you have any questions.

Sincerely,

Juan M. Formoso

Juan M. Formoso
Safety-Kleen Corp.
Branch Facility Manager

This is to acknowledge that I am aware of the spill as described above and that the information is true and correct to the best of my knowledge.

Lonnie C. Jenkins JR

Lonnie C. Jenkins JR
Authorized Representative
for Sears Roebuck & Co.

Safety-Kleen®

777 Big Timber Road
Elgin, Illinois 60123

WE CARE

FOR SERVICE CALL
TRANSPORTER

DUNS NO. 05106-0408 FED. ID NO. 39-6090019

SCHEDULED SERVICE WEEK	SCHEDULED SERVICE TERRITORY	REFERENCE NUMBER
93- 10	02	319530

MANIFEST NUMBER: XXXXX

305-884-0123 JORGE CARVAJAL
LDR REQ'D
220-2200 PP
6-049-01-0240

3-097-02-3034-8
SEARS ROEBUCK & CO #8065
13350 NW 42 AVE
OPA LOCKA FL 33054

RECEIVED
MAR 31 '93
Dept. of Environmental Prot.
West Palm Beach

BILL TO
SEARS ROEBUCK & CO
ATTN DALLAS ACCTS PAY CTR
PO BOX 660200
DALLAS TX 75266

SERVICE DATE	SALESMAN'S NO.	SALES SPECIALIST	SALES TAX EXEMPTION NUMBER	HANDLING CODE	CREDIT CODE		PREVIOUS BALANCE	PORTION OVER 60 DAYS
3/13/93	3455	XXXX		N	N		367.42	

BUSINESS TYPE	CHAIN	CUSTOMER P.O. NUMBER	GENERATOR/CUSTOMER PHONE #		O.C.	SVC P/S	PROD. P/S	SERVICE TAX	C.O.M.S. TAX	PRODUCT TAX
03	002300		305-688-3371		NO	804	028	.065	.065	.065

MACHINE SERVICE SECTION

MACHINE NUMBER	SERVICE CHARGE	SALES TAX	TOTAL CHARGE	SERVICE TERM	CHANGE SERVICE TERM (WEEKS)	CHANGE SERVICE TERM (INITIAL)	CHANGE SCHEDULE DATE (YY WW)	REMARKS
71-34778	52.50	3.41	55.91	09				0092 TYPEWRITER SHOP

TOTAL SERVICE SECTION	52.50	3.41	55.91

GENERATOR USA EPA ID NO.

GENERATOR STATE ID NO. 10-065-0120

MACHINE INSPECTION SECTION

PLEASE CHECK APPROPRIATE BOXES

	GOOD	POOR
MACHINE CONDITION & CLEANLINESS	☐	☐
LAMP ASSEMBLY CONDITION	☐	☐

	YES	NO
DECALS IN PLACE AND LEGIBLE	☐	☐
FUSIBLE LINK INSTALLED	☐	☐
EMERGENCY CLOSING OF LID UNOBSTRUCTED	☐	☐
MACHINE PROPERLY GROUNDED	☐	☐
LOCAL PHONE NO. STICKER AFFIXED TO MACHINE	☐	☐
SPENT SOLVENT MEETS ACCEPTANCE CRITERIA	☐	☐

HAZARDOUS WASTE INFORMATION:

"This is to certify that the below-named materials are properly classified, described, packaged, marked and labeled, and are in proper condition for transportation according to the applicable regulations of the Department of Transportation."

CONTAINERS: PAILS NO. DM	SSPW TANKS DF	16 GAL. NO. DM	30 GAL. NO. DM	TOTAL LBS. OR GAL.	US DOT DESCRIPTION (INCLUDING PROPER SHIPPING NAME, HAZARD CLASS, AND ID.)
		1		8	Waste Combustible Liquid, N.O.S. (Mineral Spirits) NA1993 PGIII (EPA, D001, D018, DO39) (ERG #27)
					Waste Compounds, Cleaning Liquid, (Monoethanolamine) 8, NA1760 PGIII (EPA, D008, D007, D008, D018, D021, D027, D039, D040) (ERG #60)

USEPA TRANSPORTER ID# ILD051060408

(IN GALLONS)

PRODUCT NO. 699

I certify that my total waste streams are within one of the following categories:

0 to 220 lbs./month — Initials

220 lbs. to 2,200 lbs./month — Initials

Greater than 2,200 lbs./month — Initials

Total Quantity = Number of Drums x Ave. Wt/Drum of: Pails 5.0 XXXXXXX 6 XXXXXXXXXX

DESIGNATED FACILITY NAME AND ADDRESS: SAFETY-KLEEN CORP.
8755 NW 95TH ST. MEDLEY FL 33178

USA EPA ID NO. FLD984171694

STATE ID NO.

PRODUCT SALES SECTION

SOLD ON PREVIOUS SERVICES: 2 PRIOR	PRIOR	LAST	PRODUCT NUMBER	DESCRIPTION	MSDS GIVEN	PRICE	U/M	QUANTITY DELIVERED	SALES AMOUNT	TAX	LINE TOTAL
					☐						
					☐						
					☐						
					☐						
					☐						
					☐						
					☐						
					☐						
					☐						
					☐						

PAYMENT RECEIVED SECTION

CASH ☐

CHECK NUMBER

TOTAL RECEIVED

APPLY PAYMENT TO:
☐ TODAYS SERVICE/SALE
☐ PREVIOUS BALANCE AS FOLLOWS

INV. # _____ AMOUNT $ _____
INV. # _____ AMOUNT $ _____
INV. # _____ AMOUNT $ _____

IN EVENT OF EMERGENCY CALL
1-708-888-4660 (24 hours)

TOTAL PRODUCT AMOUNTS

CHARGE MY ACCOUNT FOR THIS TRANSACTION UNLESS OTHERWISE INDICATED IN THE PAYMENT RECEIVED SECTION. ALSO I HAVE NOTED THE MACHINE INSPECTION SECTION ABOVE AND THE PRESENCE OF MACHINE, SOLVENT AND RECLAMATION AGREEMENT INFORMATION ON THE REVERSE SIDE. THE ABOVE AMOUNT IS SUBJECT TO AN INTEREST CHARGE OF THE LESSOR OF 1½% PER MONTH (18% PER ANNUM) OR THE MAXIMUM RATE ALLOWED BY LAW ON ANY UNPAID INVOICES THAT ARE NOT PAID WITHIN 30 DAYS.

X _____
GENERATOR/DESIGNATED REPRESENTATIVE SIGNATURE

Print Name _____

TOTAL SERVICE AMOUNT (FROM ABOVE)	55.91
TOTAL DUE	

IN THE EVENT OF DEFAULT, SAFETY-KLEEN SHALL BE ENTITLED TO RECOVER COSTS OF COLLECTION, INCLUDING REASONABLE ATTORNEY'S FEES.

SEE REVERSE SIDE FOR IMPORTANT INFORMATION

SERVICE/SALES ACKNOWLEDGEMENT — BRANCH - TSD

FORM NO. 700-08-12 (REV. 1/93)

Florida Department of Environmental Regulation

Southeast District • 1900 S. Congress Ave., Suite A • West Palm Beach, Florida 33406

Lawton Chiles, Governor

Telephone: 407/433-2650
Fax: 407/433-2666

Carol M. Browner, Secretary

FEB 5 - 1993

HAZARDOUS WASTE INSPECTION REPORT

1. INSPECTION REPORT __ COMPLAINT _X_ ROUTINE ___ FOLLOW-UP ___ PERMITTING

FACILITY NAME Safety-Kleen/Medley DER/EPA ID FLD 9 8 4 1 7 1 6 9 4
ADDRESS 8755 N.W. 95th Street
Medley, Florida 33178

COUNTY Dade PHONE (305) 884-0123 DATE 11-13-92 TIME 10:00 AM

TYPE OF FACILITY:

Generator
- ____ Small Quantity
- _X_ Generator
- ____ Conditionally Exempt
- ____ Non-Handler
- ____ Closed

Storage
- _X_ Container
- _X_ Tank
- ____ Waste Pile
- ____ Surface Impoundment

Treatment
- ____ Tank
- ____ Land Treatment
- ____ Thermal
- ____ Chem/Phys/Bio.
- ____ Incinerator
- ____ Surface Impoundment

Transporter
- _X_ Transporter
- _X_ Transfer Facility

Disposal
- ____ Landfill
- ____ Surface Impoundment
- ____ Waste Pile

2. Applicable Regulations:

___ 40 CFR 261.5 _X_ 40 CFR 262 _X_ 40 CFR 263 _X_ 40 CFR 264 ___ 40 CFR 265
_X_ 40 CFR 266 _X_ 40 CFR 268

3. Responsible Official: (Name & Title)
Jorge Carvajal - Branch Manager

4. Survey Participants & Principal Inspector
Timothy Gray, Vincent Peluso, J. Knox McKee - FDER
Juan Formoso, Jorge Carvajal - Safety-Kleen

5. Facility Latitude: 25° 51' 34" Longitude: 80° 20' 30"

6. Type of Ownership: FEDERAL STATE COUNTY MUNICIPAL PRIVATE

7. Permit Number: HO13-216311 Date Issued: 12/02/92 Expiration Date: 12/02/97

FORM REV. 12/7/88

HW/39

Recycled Paper

SAFETY-KLEEN/MEDLEY FLD984171694

A hazardous waste compliance inspection was conducted at the Safety-Kleen/Medley facility located at 8755 N.W. 95th Street, Medley, Florida 33178 on November 13, 1992.

Safety-Kleen/Medley markets, sells, distributes, and picks up recyclable solvents and cleaners. Safety-Kleen has a hazardous waste Operating Permit (OP) number H013-216311, and is operating as a storage facility. This inspection was conducted to monitor the facility's compliance with permit conditions, and with hazardous waste rules and regulations.

The site inspection and record review were hosted by Mr. Jorge Carvajal, Branch Manager and Mr. Juan Formoso, Facility Manager for Safety-Kleen.

WASTES

Safety-Kleen generates or recycles the following solvents and products:

Solvent	Waste Code
Dumpster Sediment	D001
Mineral Spirits	D001
Perchloroethylene	F002
Immersion cleaner	D006,D007,D018
Paint Related Waste	D001,F003,F005
Transfer/Fluid Recovery Service Waste (FRS)	D001,F003,F005
Spent Ethylene Glycol	D008,D039
Used Oil	

Safety-Kleen's customers include dry cleaners, auto and truck repair shops, car dealerships and variety of other businesses who use solvents and cleaners.

INSPECTION

Safety-Kleen/Medley (S-K) employs 17 people and has ten trucks. A truck is loaded with raw materials in 5, 16 and 30-gallon drums. At the customer's site, the used solvent is exchanged with the fresh solvent. S-K transports the spent solvent back to the Medley facility. The used perchloroethylene and immersion cleaner are left in drums and placed in the storage area. Each truck is equipped with 2-110 gallon tanks which formerly held virgin perchloroethylene. This phase of S-K's operation is being eliminated and the perc is now available in pre-filled 16-gallon quantities only. Several drums of raw mineral spirits are also on-board each vehicle. Each vehicle is also equipped with a spill kit in case of an accidental discharge.

Containers of spent mineral spirits are poured into one of two "dumpsters" when it arrives at the S-K facility. Solvent in the "dumpster" is then filtered and pumped to the waste mineral spirits tank located in the tank farm adjacent to the main building. Spent mineral spirits is used as a rinsate, and a brush attachment is employed to remove sludge and debris from the containers. This area is also known as the return/fill area and is referenced in the operating permit.

The "dumpsters" are on a raised loading dock. The floor of the dock is metal grating. A catch pan has been installed below the grating at each dumpster to collect spills. The catch pans are connected via tubing to gas can satellite accumulation containers located on the floor beneath the dock. Each connector tube has a check valve installed in the line and S-K personnel must manually open and close the valves by crawling beneath the dock and grating. Mr. Carvajal and Mr. Formoso indicated that the valves are closed after fill and return operations, however, at the time of the inspection, both of the valves were in the open position. From a technical standpoint, this can be viewed as an open container. For safety reasons, Department personnel recommended that S-K increase the length of the piping so the satellite accumulation containers and the check valves will extend beyond the loading dock. This will allow easy access to both the containers and the valves.

Next to each dumpster are three 16-gallon containers which are used to collect 1) dumpster sediment (mud), 2) metal particles and 3) waste paper. Raw material mineral spirits are also handled at the dock. The clean mineral spirits is pumped from a storage tank in the tank farm to containers via a pump and hand held nozzle.

STORAGE AREA

The container storage area consists of three main operational units. 1) The Allied Products storage area is used for the storage of subsidiary products which S-K markets along with its line of recyclable solvents. 2) Fluid recovery service (FRS) waste storage area where FRS wastes are managed as a segregated transfer facility waste and are maintained seperately from the other wastestreams, as stated in the permit, and 3) the main container storage area. Drums of hazardous waste are stored on pallets within this area. At the time of the inspection, the following hazardous waste containers were present:

20	(16-gallon) drums of petroleum naptha sludge (D001)
12	(16-gallon) drums of petroleum naptha dry cleaning waste (D001)
5	(16-gallon) drums of trichlorofluoromethane (F002)
29	(16-gallon) drums of tetrachloroethylene (F002)
5	(16-gallon) drums of waste paint material (F003/F005)
6	(5-gallon) drums of waste paint material (F003/F005)
8	(16-gallon) drums of waste cleaning compound (D006,D007,D018)

Additionally, there were five 30-gallon containers of used oil filters. The used oil filters are sent to Tampa for recycling. There were no FRS wastes present on the day of the inspection. All observed drums were in good condition and properly labeled.

Maximum permitted storage for this area is 6,912 gallons. This amount also includes any FRS wastes that may be present. At the time of the inspection approximately 1,294 gallons of waste were in the container storage area. A spill control board was located on the wall next to the storage area, containing mask, shovel, broom, gloves and absorbent. Fire extinguishers and an eye wash station are also located nearby.

FLD984171694

STORAGE TANK FARM

Both used and raw material mineral spirits are individually stored in two separate 20,000-gallon steel tanks. Per the operating permit, the tanks may be operated at a maximum volume of 19,000 gallons or 95 percent capacity. The tanks are located outdoors within a five foot high, concrete, rectangular containment wall, and are under a roof. The tanks are inspected and the alarm system is tested on a daily basis. A third 20,000 gallon tank is designated for used antifreeze, but was not in service at the time. According to Mr. Carvajal, one inch of height in the tank is equal to 70.6 gallons of solvent. Tank levels can be read instantaneously by inputing information on a digital control panel. The panel is part of the overfill and leak detection system.

RECORDKEEPING

S-K was asked to provide paper work and manifests for selected generators chosen randomly from hazardous waste labels during the container storage inspection. Additionally, another 100 manifests were randomly chosen for review. All paperwork and manifests appeared to be correct and complete. Personnel training records, inspection logs and the contingency plan were also reviewed and appeared to be in order and up to date.

CONCLUSIONS

Safety-Kleen/Medley is a generator, transporter, and a permitted storage facility for hazardous waste. S-K is also a collector and transporter of used oil. Subsequent to the inspection, S-K provided written correspondence and schematic drawings showing the relocation of the gas can satellite accumulation containers to the north side of the return/fill dock.

No apparent hazardous waste violations were observed.

Facility personnel were very cooperative.

Future reinspections of the facility will be conducted to ensure proper management of hazardous waste.

TG:g/21

cc: Office of General Counsel, DER Tallahassee
Kenneth Lapierre, USEPA Region IV, Atlanta, Georgia
Metropolitan Dade County Environmental Resources Management
Hazardous Waste Permitting Section, DER, West Palm Beach
File Reporting Coordinator
West Palm Beach DER Files

Date 11/13/92
Inspector GRAY PELUSO, MCKEE
Facility ID# FLD 984171674

RCRA INSPECTION REPORT
GENERATOR'S CHECKLIST

Note: On multiple part questions, check those not in compliance.

Section A - Site Identification No.

1. Site Name: SAFETY-KLEEN / MEDLEY
2. Responsible Official: JORGE CARVAJAL
3. Survey Participants: TIM GRAY, VINCE PELUSO, KNOX MCKEE, JUAN FORMOSO, JORGE CARVAJAL

Section B - Hazardous Waste Determination (262.11)

1. Does generator generate hazardous waste(s) listed in Subpart D (261.30-261.33 - List of Hazardous Waste)? ✓ Yes ___ No

   a. If yes, list wastes, EPA numbers and quantities. F002, D001,

2. Does generator generate solid waste(s) that exhibit hazardous characteristics? (corrosivity, ignitability, reactivity, toxicity characteristic)(261.20-261.24 - Characteristics of Hazardous Waste) ✓ Yes ___ No

   a. If yes, list wastes, EPA numbers, and quantities. ___

   b. Does generator determine characteristics by testing, by product knowledge, or by applying process knowledge? ALL THREE ✓ Yes ___ No

      (1) If determined by testing, did generator use test methods in Part 261, Subpart C (or equivalent)? ✓ Yes ___ No

      (2) If equivalent test methods used, attach copy of equivalent methods used.

3. Is generator subject to full regulation under Part 262? ✓ Yes ___ No
   (If no, check appropriate exemptions)

   Conditionally exempt small quantity generator (261.5 - Special requirements) (Describe small quantity disposal practices and checklist) ___
   OR
   Produces non-hazardous waste at this time (261.4 - Exclusions) ___
   OR
   Recycles, reclaims, uses or reuses hazardous waste at this time (261.6 - Exclusions) (Describe how this is achieved.) ___

rev. 1-92

DATE 11/13/92
FACILITY ID TXD 984 171 674

OR
Being a farmer disposing of waste pesticides for his own use on his own property (262.10(d) - Farmers) ____

OR
Burns hazardous waste as a fuel for the purpose of recovering usable energy (266.30(c)(2)) ____

Section C - Manifest (262.20-262.23)

1. Has generator shipped hazardous waste off-site since November 19, 1980? (Subpart B - The Manifest) ✓ Yes ___ No

   a. If no, do not fill out Section C and D.

   b. If yes, identify primary off-site facilities. List facilities in narrative report.

2. Does generator use manifest? (262.20 - General requirements) ✓ Yes ___ No
   Is EPA form 8700-22 (Rev 9-88) used? ✓ Yes ___ No

   If yes, inspect manifests at random. Do all manifests reviewed include the following information? (262, Appendix) (Check items not on manifest.)

   a. Generator EPA ID No. ✓ Yes ___ No

   b. Manifest Document No. ✓ Yes ___ No

   c. Generator's Name, Mailing Address, Telephone No. ✓ Yes ___ No

   d. Transporter(s) Name, EPA I.D. No., Telephone No. ✓ Yes ___ No

   e. Facility Name, Address, EPA I.D. No., Telephone No. ✓ Yes ___ No

   f. DOT description of the waste ✓ Yes ___ No

   g. (1) Containers (number and type) ✓ Yes ___ No

      (2) Quantity (weight or volume) ✓ Yes ___ No

   h. EPA waste no. ✓ Yes ___ No

   i. Emergency Information (optional) (Special handling instructions, Phone No.) ✓ Yes ___ No

   j. Is the following certification on each manifest form? ✓ Yes ___ No

      I hereby declare that the contents of this consignment are fully and accurately described above by proper shipping name and are classified, packed, marked and labeled, and

DATE 11/13/92
FACILITY ID FLD 984171674

are in all respects in proper condition for transport by highway according to applicable international and national government regulations.

If I am a large quantity generator, I certify that I have a program in place to reduce the volume and toxicity of waste generated to the degree I have determined to be economically practicable and that I have selected the practicable method of treatment, storage or disposal currently available to me which minimizes the present and future threat to human health and the environment.

k. Signatures and dates

(1) Generator — ✓ Yes ___ No
(2) Transporter — ✓ Yes ___ No
(3) Disposer (returned copy) — ✓ Yes ___ No

l. Indicate number of manifests inspected and number of violations. Note type of violation in report. — 6 FACILITIES ~100 MANIFESTS

m. If copy of manifest from facility was not returned within 35 days, did generator file an exception report? (262.42 - Exception reporting) — ✓ Yes ___ No — DID NOT HAVE TO FILE

If yes, did it contain the following information?
Legible copy of manifest — ___ Yes ___ No
AND
Cover letter explaining generators efforts to locate waste. — ✓ Yes ___ No

n. Does (will) generator retain copies for 3 years? — ✓ Yes ___ No

Section D - Pre-Transport Requirements (262.30-262.34) — ___ N/A

1. Does generator package waste for transport? — ✓ Yes ___ No

If no, skip to question 8.
If yes, complete the following questions.

2. Does generator package waste in accordance with 49 CFR 173, 178, and 179 (DOT requirements)? (262.30 - Packaging) — ✓ Yes ___ No

DATE 11/13/92
FACILITY ID FLD 984 171 694

3. Inspect containers to be shipped.

   a. Are containers to be shipped in good condition? (Describe containers and condition; i.e, leaking or corroding or bulging.) ✓ Yes ___ No

   b. Is there evidence of heat generation from incompatible wastes in the containers? ✓ Yes ___ No

4. Before shipping, does the generator use DOT labeling requirements in accordance with 49 CFR 172? (263.31 - Labeling) ✓ Yes ___ No

5. Does the generator mark each package in accordance with 49 CFR 172? (262.32 - Marking) ✓ Yes ___ No

6. Is each container of 110 gallons or less marked with the following label? (262.32 - Marking) ✓ Yes ___ No

   Label saying: HAZARDOUS WASTE - Federal Law Prohibits Improper Disposal. If found, contact the nearest police or public safety authority or the U.S. Environmental Protection Agency.

   Generator's Name and Address _____

   _____

   Manifest Document Number _____

7. If there are any vehicles present on site loading or unloading hazardous waste, inspect for presence of placards. Note this instance on narrative explanation sheet. (262.33 - Placarding) NO

   a. Does the generator have the appropriate placards to offer the initial transporter? ✓ Yes ___ No

   b. If no, who provides placards? _____

8. Accumulation Time (262.34 - Accumulation Time)

   a. Is facility a permitted storage facility? If yes, skip to question #9. ✓ Yes ___ No

   If no, answer rest of question #8.

   b. Does the facility comply with the 90-day accumulation time limit? (262.34(a)) ___ Yes ___ No

   If no, has the generator been granted a 30-day extension? (262.34(b)) ___ Yes ___ No

   If yes, explain the unforeseen/uncontrollable circumstances in the narrative.

DATE 11/13/92
FACILITY ID FLD 984171694

c. Are containers used to store wastes? (262.34(a)(1)) ✓Yes ___No

If yes, complete Container Storage Checklist for Generators.

Is the beginning date of accumulation time clearly indicated? (262.34(a)(2)) ✓Yes ___No

d. Are tanks used to store wastes? (262.34(a)(1)) ✓Yes ___No

If yes, complete Tanks Checklist for Generators.

e. While being accumulated, is each container or tank clearly marked "Hazardous Waste"? (262.34(a)(3)) ✓Yes ___No

NOTE: If generator accumulates waste on site but is not a storage facility, fill out Appendix A to Generators Checklist.

9. Describe storage area. Use photos and narrative.

Section E - Recordkeeping and Records (262.40-262.43) ___N/A

Explain_____

1. Is generator keeping the following reports? (262.40 - Record keeping)
(Note: The following must be kept for a minimum of three years.)

a. Biennial reports (262.41). ✓Yes ___No

b. Exception reports where applicable (262.42). ✓Yes ___No

c. Test results where applicable. ✓Yes ___No

2. Where are records kept (at facility or elsewhere)? AT FACILITY

3. Who is in charge of keeping the records?

Name JUAN FORMOSO Title

4. Any additional reporting? (262.43 - Additional Reporting) ___Yes ___No

Section F - Special Condition (262.50 - International Shipments) ___Yes ✓No

Explain N/A

DATE 11/13/92
FACILITY ID FLD 984 171 694

1. Has generator received from, or transported to, a foreign source, any hazardous waste? ___Yes ✓No

   a. If yes, has he filed a notice with the Regional Administrator? N/A ___Yes ___No

   b. Is this waste manifested and signed by Foreign consignee? ___Yes ___No

   c. If generator transported wastes out of the country, has he received confirmation of delivered shipment? ___Yes ___No

Appendix A

Section A - Personnel Training (265.16)

1. Do management personnel complete hazardous waste training? ✓Yes ___No

   a. Is training on-the-job? ✓Yes ___No

   b. Is training in the classroom? ✓Yes ___No

2. Do laborers who handle hazardous waste complete training? ✓Yes ___No

   a. Is training on-the-job? ✓Yes ___No

   b. Is training in the classroom? ✓Yes ___No

3. Does training include:

   a. Emergency response procedures? ✓Yes ___No

   b. Inspection procedures? ✓Yes ___No

   c. Operation of hazardous waste handling equipment? ✓Yes ___No

4. How often is training reviewed? EVERY 6 MONTHS

5. Does the facility have personnel training records including:

   a. Job title and description of position? ✓Yes ___No

   b. Description of employee's training? ✓Yes ___No

6. Are records maintained for three years? ✓Yes ___No

DATE 11/13/92
FACILITY ID FLD 984 171 694

Section B - Preparedness and Prevention (265.30-265.37)

1. Is there evidence of fire, explosion or contamination of the environment? (265.31 - Maintenance and Operation of Facility) ___Yes ✓No

   If yes, use narrative explanation.

2. Is the facility equipped with (265.32 - Required equipment)

   a. Internal communications or alarm system? ✓Yes ___No
      Is it easily accessible in case of emergency? ✓Yes ___No

   b. Telephone or two-way radio to call emergency response personnel? ✓Yes ___No

   c. Portable fire extinguishers, fire control equipment, spill control equipment and decontamination equipment? ✓Yes ___No
      Is this equipment tested to assure its proper operation? ___Yes ___No

      How frequently? SERVICED YEARLY / CHECKED WEEKLY

   d. Water of adequate volume for hoses, sprinklers or water spray system? ___Yes ___No

      (1) Describe source of water CITY OF MEDLEY

      (2) Indicate flow rate and/or pressure and storage, if applicable._____

3. Is there sufficient aisle space to allow unobstructed movement of personnel and equipment? (e.g., adequate aisle space in between containers to check for leakage, corrosion and proper labeling, etc.) (265.35 - Required Aisle Space) ✓Yes ___No

4. Has the owner/operator made arrangements with the local authorities to familiarize them with characteristics of the facility? (Layout of facility, properties of hazardous waste handled and associated hazards, places where facility personnel would normally be working, entrances to roads inside facility, possible evacuation routes.) (265.37 - Arrangements with Local Authorities) ___N/A ✓Yes ___No

   If N/A, explain_____

5. In the case that more than one police or fire department might respond, is there a designated primary authority? (265.37 - Arrangements with Local Authorities) ___N/A ✓Yes ___No

   If yes, indicate primary authority CITY OF MEDLEY

   Is the fire department a city or volunteer fire department? DADE COUNTY FIRE DEPT.

DATE 11/13/92
FACILITY ID FLD 984 171

6. Does the owner/operator have phone numbers of and agreements with state emergency response teams, emergency response contractors and equipment suppliers? (265.37 - Arrangements with Local Authorities) ✓ Yes ___ No

   Are they readily available to the emergency coordinator? ✓ Yes ___ No

7. Has the owner/operator arranged to familiarize local hospitals with the properties of hazardous waste handled and types of injuries that could result from fires, explosions, or releases at the facility? (265.37 - Arrangements with Local Authorities) ✓ Yes ___ No

   If no, has the owner/operator attempted to do this? ✓ Yes ___ No

8. If the State, or local authorities decline to enter into the above referenced agreements, has this been documented in the operating record? (265.37(b) - Arrangements with Local Authorities) NOT DECLINED ___ Yes ___ No

Section C - Contingency Plan and Emergency Procedures (265.50-265.56)

1. Does the facility have a contingency plan? (265.51 - Purpose and Implementation of Contingency Plan) ✓ Yes ___ No

2. Is it maintained at the facility? (265.53 - Copies of Contingency Plan) ✓ Yes ___ No

3. Is the contingency plan a revised SPCC Plan? (265.53 - Content of Contingency Plan) ___ Yes ___ No

   a. Does the plan include:

      (1) Action personnel will take? ✓ Yes ___ No
      (2) Evacuation routes? ✓ Yes ___ No
      (3) Emergency equipment? ✓ Yes ___ No
      (4) Is the emergency equipment properly inspected and maintained? ✓ Yes ___ No

4. Is there an emergency coordinator on site or within short driving distance of the plant at all times? ✓ Yes ___ No

5. Who is the emergency coordinator? JUAN FORMOSO

6. Has the facility supplied local police and fire departments with a copy of the contingency plan? (265.53 - Copies of Contingency Plan) ✓ Yes ___ No

Date 11/13/92
Inspector GRAY, PERKO, McKEE
Generator EPA ID# FLD 984171644

TANKS SYSTEMS CHECKLIST FOR GENERATORS
(40 CFR Part 265, Subpart J - Tank Systems)

NOTE: If multiple tanks exist, list each tank and specify compliance or noncompliance on the facility's site plan. Indicate on site diagram which tanks are not in compliance.

1. Are tanks presently used to accumulate waste? ✓ Yes ___ No

2. Are there any exempt tank systems present (Closed-loop Recycling System - 261.4(a)(8))? ___ Yes ✓ No

3. Assessment of the integrity of existing tank systems (265.191):

   a. Number of existing tank systems without secondary containment (265.193) in operation, or for which installation commenced on or prior to July 14, 1986? 0

   b. Number of existing tank systems without secondary containment (265.193) in operation, or for which installation commenced on or prior to the date the contained waste became hazardous (after 7/14/86)? 0

   c. Are assessments on file for each of these tank systems (a & b)? ✓ Yes ___ No

   If yes, do the following apply?

   (1) Assessment conducted by 1/12/88? ✓ Yes ___ No

   (2) For wastes becoming hazardous after 7/14/86, was assessment on tank containing such waste conducted within 1 year after the date the waste became hazardous? ✓ Yes ___ No

   (3) Certification(s) by independent, qualified, and registered P.E.(s)? ✓ Yes ___ No

   (4) Integrity assessment(s) results?

   ✓ not leaking?

   ___ unfit for use? (see item #8)

Comments:

Date 11/13/92
Inspector GRAY PRUSO McKEE
Facility ID# FLD 984 177 694

CONTAINERS STORAGE CHECKLIST FOR GENERATORS

(40 CFR Part 265, Subpart I - Use and Management of Containers)

1. Are the containers in good condition (265.171)? (Check for leaks, corrosion, bulges, etc.) ✓ Yes ___ No

2. If a container is found to be leaking, does the operator transfer the hazardous waste from the leaking container? ✓ Yes ___ No

3. Is the waste compatible with the containers and/or its liner (265.172)? ✓ Yes ___ No

4. Are the containers kept closed except when adding or removing wastes (265.173(a))? ? ✓ Yes ___ No

5. Are containers holding hazardous waste opened, handled or stored in such a manner as to cause the container to rupture or leak (265.173(b))? ___ Yes ✓ No

   If yes, explain using narrative.

6. Are each of the containers inspected at least weekly (265.174)? ✓ Yes ___ No

   If no, explain using narrative concerning the frequency of inspection.

7. Are containers holding ignitable or reactive wastes located at least 15 meters (50 feet) from the facility property line (265.176)? ___ N/A ✓ Yes ___ No

   If no, explain using narrative and document with photograph.

8. Are incompatible wastes stored in the same containers? ✓ Yes ___ No

   If yes, explain using narrative.

9. Are containers holding incompatible wastes kept apart by physical barrier or sufficient distance (265.177)? ✓ Yes ___ No

   If no, explain using narrative.

Rev 1-92

DATE 11/13/92
FACILITY ID GRAY, PERUSO, McKEE

4. New tank systems or components (265.192):

a. Number of new tank systems or components installed or put into use after 7/14/86? 3

b. Are assessments on file for each of the new tank systems or components? ✓Yes ___No

If yes, do the following apply:

(1) Assessment(s) certified by an independent, qualified, registered P.E.? ✓Yes ___No

(2) Assessment(s) include the following information:

- Design standards (including secondary containment unless a variance-265.193(g) has been received? ✓Yes ___No

- Factor affecting corrosion potential of tanks or components in which the external shell or any external metal component is in contact with soil or water (determined by a corrosion expert)? ✓Yes ___No

- The type and degree of external corrosion protection that is needed to ensure the integrity of the tank system(s) or components(s) described above (determined by a corrosion expert)? ✓Yes ___No

- A determination of design or operational measures that will protect underground tank system components against potential damage from vehicular traffic? ✓Yes ___No

- Design considerations to ensure that tank foundations will maintain the load of a full tank? ✓Yes ___No

- Tank systems will be anchored to prevent flotation or dislodgement where it is placed in a saturated zone or is located within a seismic fault zone? ✓Yes ___No

- Tank systems will withstand the effects of frost heave? ✓Yes ___No

c. Are certification statements by a qualified installation inspector or qualified registered professional engineer on file to attest:

(1) to proper tank system or component installation, tank system tightness, and that necessary repairs were performed if needed? ✓Yes ___No

(2) That backfill, used for underground tank systems or components, was made up of noncorrosive, porous and homogeneous materials that were placed properly around the system or component to ensure proper support? ✓Yes ___No

(3) That ancillary equipment has been supported and and protected against physical damage and excessive stress due to settlement, vibration, expansion or contraction? ✓Yes ___No

(4) That the type and degree of corrosion protection necessary was provided, based on the certified design assessment of the system? ✓Yes ___No

(5) That an independent corrosion expert ensured the proper installation of a corrosion protection system if it was field-fabricated? ✓Yes ___No

d. Has secondary containment been provided as required in 265.193 (see Item #6)?

(1) Has a variance (265.193(g)) been obtained from secondary containment? ___Yes ✓No

Comments:

5. Containment and detection of releases (265.193).

NOTE: Tank systems storing hazardous waste that contain no free liquids and are located within buildings with impermeable floors are exempt from these requirements (265.190(a)).

a. How old are the existing tank systems? ___

(1) If not known, what is the age of the facility? ~6MOS TO 1 YEAR

b. How many existing systems are being used to store or treat dioxin containing wastes: F020, F021, F022, F023, F026, and F027? 0

c. Are there any existing tank systems which are used to store or treat materials which became hazardous wastes after 1/12/87? 0Yes ___No

(1) How many? 0

Date 11/13/92
Inspector GRAY, PELUSO, McKEE
Facility ID# FLD 984 171 694

TRANSPORTERS CHECKLIST

I. SITE NAME: SAFETY-KLEEN / MEDLEY

II. TRANSPORTER REQUIREMENTS (40 CFR 263)

1. Do vehicles transporting hazardous waste have the appropriate placards? (263.10)(49 CFR 172.500) ✓ Yes ___ No

2. Does transporter have an EPA identification number? (263.11(a)) ✓ Yes ___ No

3. Does the transporter use manifest system as required by 263.20? ✓ Yes ___ No

Do the manifests contain at least:

a. Name, address, and EPA ID of transporter? ✓ Yes ___ No

b. Name, address, and EPA ID code of generator? ✓ Yes ___ No

c. Name, address, identification code of designated permitted facility? ✓ Yes ___ No

d. Corresponding manifest document number? ✓ Yes ___ No

e. Description and quantity of each hazardous waste? ✓ Yes ___ No

f. Signature of subsequent transporters? ✓ Yes ___ No

g. Signatures signifying proper delivery or reasons why delivery could not be certified? ✓ Yes ___ No

h. EPA waste codes? ✓ Yes ___ No

DATE 11/13/92
FACILITY ID FXD

4. International shipments: (263.20(g)) N/A ✓ N/A

   a. Record of date waste left U.S.? ___Yes ___No

   b. Presence of one signed copy in records? ___Yes ___No

   c. Signed copy of manifest returned to the generator? ___Yes ___No

   d. Copy of the manifest given to a U.S. Customs official at the point of departure from the United States? ___Yes ___No

5. For SQG waste:

   a. Is waste transported according to reclamation agreement? ___Yes ___No

   b. Is following information recorded on a shipping paper:

      Name, address, and EPA ID of waste generator ✓Yes ___No
      Quantity of waste accepted ✓Yes ___No
      DOT - required shipping info ✓Yes ___No
      Date waste is accepted ✓Yes ___No

   c. Does transporter carry this shipping paper during transport? ✓Yes ___No

   d. Are records maintained for three years after termination or expiration of reclamation agreement? ✓Yes ___No

6. Are copies of the manifest retained for 3 years? (263.22) ✓Yes ___No

7. Is there evidence of discharge of hazardous waste? (263.30) ___Yes ✓No

8. Has transporter demonstrated the financial responsibility required under 17-30.170(2) ✓Yes ___No

9. Does the transporter verify financial responsibility with the Department annually (17-730.170(3))? ✓Yes ___No

III. TRANSFER FACILITY REQUIREMENTS (17-730.171)

A. Does transporter comply with 10 day storage limit for transfer facilities? (263.12) ✓Yes ___No

   1. Is the hazardous waste packaged according to 262.30? (263.12) ✓Yes ___No

DATE 11/13/92
FACILITY ID FXD 984171694

B. General Facility Standards (265 Subpart B)

1. Security (265.14)

a. Is the facility security system adequate to minimize unauthorized entry? ✓Yes ___No

b. Are signs posted and legible for 25 feet? ✓Yes ___No

2. Inspection Requirement (265.15)

a. Does the facility have a copy of the Inspection Plan? ✓Yes ___No

b. Does the facility have completed inspection logs? ✓Yes ___No

c. Were the deficiencies corrected in a timely manner? ✓Yes ___No

d. Are the inspection logs maintained at the facility for 3 years? ✓Yes ___No

3. Personnel Training (265.16)

a. Do management personnel complete hazardous waste training? ✓Yes ___No

- Is training on the job? ✓Yes ___No
- Is training in the classroom? ✓Yes ___No

b. Do laborers who handle hazardous waste complete training? ✓Yes ___No

- Is training on the job? ✓Yes ___No
- Is training in the classroom? ✓Yes ___No

c. Does training include:

- Emergency response procedures? ✓Yes ___No
- Inspection procedures? ✓Yes ___No
- Operation of hazardous waste handling equipment? ✓Yes ___No

d. How often is training reviewed? EVERY 6 MONTHS

e. Does the facility have personnel training records including:

- Job title and description of position? ✓Yes ___No
- Description of employee's training ✓Yes ___No

DATE 11/13/92
FACILITY ID FLD 984171694

f. Is training successfully completed within 6 months of hiring/transfer to HW position? ✓ Yes ___ No

g. Are records maintained for three years at the facility? ✓ Yes ___ No

4. Ignitable, Reactive, or Incompatible Waste (265.17)

a. Is the waste separated and confined from sources of ignition or reaction, sparks, spontaneous ignition, and radiant heat? ✓ Yes ___ No

b. Are "No Smoking" signs posted in the area? ✓ Yes ___ No

C. Preparedness and Prevention (265 Subpart C)

1. Is there evidence of fire, explosion or contamination of the environment? (265.31 - Maintenance and Operation of Facility) ___ Yes ✓ No

If yes, use narrative explanation.

2. Is the facility equipped with (265.32 - required equipment):

a. Internal communications or alarm system? ✓ Yes ___ No
Is it easily accessible in case of emergency? ✓ Yes ___ No

b. Telephone or two-way radio to call emergency response personnel? ✓ Yes ___ No

c. Portable fire extinguishers, fire control equipment, spill control equipment and decontamination equipment? ✓ Yes ___ No

Is this equipment tested to assure its proper operation? ___ Yes ___ No

How frequently? SERVICED YEARLY / CHECKED WEEKLY

d. Water of adequate volume for hoses, sprinklers or water spray system? ✓ Yes ___ No

(1) Describe source of water. CITY OF MEDLEY

(2) Indicate flow rate and/or pressure and storage capacity, if applicable. _____

DATE 11/13/92
FACILITY ID FXD 984171697

3. Is there sufficient aisle space to allow unobstructed movement of personnel and equipment? (e.g., adequate aisle space in between barrels to check for leakage, corrosion and proper labeling, etc.) (265.35 - Required Aisle Space) ✓ Yes ___ No

4. Has the owner/operator made arrangements with the local authorities to familiarize them with characteristics of the facility? (Layout of facility, properties of hazardous waste handled and associated hazards, places where facility personnel would normally be working, entrances to roads inside facility, possible evacuation routes.) (265.37 - Arrangements with Local Authorities) ___ N/A ✓ Yes ___ No

If N/A, explain_____

5. In the case that more than one police or fire department might respond, is there a designated primary authority? (265.37 - Arrangements with Local Authorities) ___ N/A ✓ Yes ___ No

If yes, indicate primary authority. CITY OF MERKEL POLICE
Is the fire department a city or volunteer fire department? DOD - COUNTY FIRE DEPT.

6. Does the owner/operator have phone number of and agreements with state emergency response teams, emergency response contractors and equipment suppliers? (265.37 - Arrangements with Local Authorities) ✓ Yes ___ No

Are they readily available to the emergency coordinator? ✓ Yes ___ No

7. Has the owner/operator arranged to familiarize local hospitals with the properties of hazardous waste handled and types of injuries that could result from fires, explosions, or releases at the facility? (265.37 - Arrangements with Local Authorites) ✓ Yes ___ No

If no, has the owner/operator attempted to do this?

8. If the State, or local authorities decline to enter into the above referenced agreements, has this been documented in the operation record? (265.37 - Arrangements with Local Authorities) NOT DECLINED ___ Yes ___ No

DATE 11/13/92
FACILITY ID FLD 984 171 674

C. Contingency Plan and Emergency Procedures (265 Subpart D)

1. Does the facility have a contingency plan? (265.51 - Purpose and Implementation of Contingency Plan) ✓ Yes ___ No

2. Is it maintained at the facility? (265.53 - Copies of Contingency Plan) ✓ Yes ___ No

3. Is the contingency plan a revised SPCC Plan (265.52 - Content of Contingency Plan) ___ Yes ___ No

   a. Does the plan include:

      (1) Action personnel will take? ✓ Yes ___ No

      (2) Evacuation routes? ✓ Yes ___ No

      (3) Emergency Equipment? ✓ Yes ___ No

      (4) Is the emergency equipment properly inspected and maintained? ✓ Yes ___ No

4. Is there an emergency coordinator on site or within short driving distance of the plant at all times? (265.55 - Emergency Coordinator) ___ Yes ___ No

5. Who is the emergency coordinator? JUAN FORMOSO

6. Has the facility supplied local police and fire departments with a copy of the contingency plan? (265.53(b) - Content of Contingency Plan) ✓ Yes ___ No

D. Container Storage Checklist

(Subpart I - Use and Management of Containers 265.170)

1. Are the containers in good condition (265.171)? (check for leaks, corrosion, bulges, etc.) ✓ Yes ___ No

2. If a container is found to be leaking, does the operator transfer the hazardous waste from the leaking container? ✓ Yes ___ No TRANFER TO NEW CONTAINER

3. Is the waste compatible with the containers and/or its liner? (265.172) ✓ Yes ___ No

DATE 11/13/92
FACILITY ID FLD 984 171 694

4. Are containers holding hazardous waste opened, handled or stored in such a manner as to cause the container to rupture or leak? (265.173) ___Yes ✓No

If yes, explain using narrative.

5. Are each of the containers inspected at least weekly (265.174)? DAILY ✓Yes ___No

If no, explain using narrative concerning the frequency of inspection.

6. Are containers holding ignitable or reactive wastes located at least 15 meters (50 feet) from the facility property line? (265.176) ✓Yes ___No

If yes, explain using narrative.

7. Are incompatible wastes stored in the same containers? ___Yes ✓No

If yes, explain using narrative.

8. Are containers holding incompatible wastes kept apart by physical barrier or sufficient distance? ✓Yes ___No

If no, explain using narrative.

E. Does facility have a written closure plan satisfying requirements of closure performance, notification, and decontamination standards of 40 CFR 265.111, 265.112(c), 265.114, 265.115? (17-30.171(2)(b)) ✓Yes ___No

F. Is hazardous waste that is stored in containers or vehicles stored on a man made surface which is capable of preventing spills or releases to the ground? (17-730.171(2)(d)) ✓Yes ___No

G. Is a written log maintained for all waste entering or leaving the transfer facility? (17-730.171(2)(e)) ✓Yes ___No

Does the log contain:

Generators' names? ✓Yes ___No
Manifest numbers? ✓Yes ___No
Dates when waste enters and leaves facility? ✓Yes ___No

DATE_____
FACILITY ID_____

H. Has the facility notified the department on Form 17-730.900(6) (Transfer facility notification form)? (17-730.171(3)) ___Yes ___No

I. Does the transfer facility have an EPA/DER ID number? ___Yes ___No

IV. UNREGULATED WASTES (HOUSEHOLD/CONDITIONALLY EXEMPT SMALL QUANTITY GENERATOR WASTES) _____N/A

1. Does the transporter have documentation that this waste was generated by an unregulated source? ___Yes ___No

2. If no, is the transporter assuming responsibility as the generator of this waste? ___Yes ___No

   a. If yes, complete the applicable Generator or Small Quantity Generator checklist.

   b. If no, the inspector should inform the transporter that he will be held responsible as the generator of the waste and will be reinspected to ensure that the applicable requirements are being satisfied. A follow-up inspection should be scheduled as follows:

      i) 90 days after initial inspection if the quantity of "unregulated" wastes on site exceed 1000 kg.

      ii) 180 days after initial inspection if the quantity of "unregulated" wastes on site are less than 1000 kg.

3. Does the transporter mix/consolidate hazardous wastes of different DOT shipping descriptions 263.10(c)(2)? ___Yes ___No

   If yes, complete the Generator checklist.

V. LAND BAN WASTE

1. Does the transporter manage restricted (land ban) wastes?

   If yes, check appropriate box(es). ✓Yes ___No

   "California List" _____
   F--- List ✓

Date 11/13/92
Inspector GRAY, PELUSO, McKEE
Facility ID# FLD 984 141 644

RCRA COMPLIANCE INSPECTION REPORT
TSD FACILITIES CHECKLIST

General Facility Standards

1. Site Name SAFETY-KLEEN / MEDLEY

2. Has facility received hazardous waste from a foreign source? (264.12 - required notices) ___Yes ✓No

N/A

If yes, has he filed a notice with the Regional Administrator and DER? ___Yes ___No

3. Does the facility have a copy of the permit along with the approved application? ___Yes ___No

Waste Analysis (264.13) 264___ Permit Condition___

1. Is a copy of the waste analysis plan maintained at the facility? ✓Yes ___No

2. Does the facility have copies of completed waste analysis reports? ✓Yes ___No

3. Has the waste analysis been reviewed or repeated as required? ✓Yes ___No

4. (For off-site facilities) waste analysis that generators have agreed to supply? ___Yes ___No

5. Check waste analysis equipment to see if it is on-site and in working condition? ___Yes ___No

Security (264.14) 264___ Permit Condition___

1. Is the facility security system adequate to minimize unauthorized entry? ✓Yes ___No

2. Are signs posted and legible for 25 feet? ✓Yes ___No

Inspection Requirement (264.15) 264___ Permit Condition___

1. Does the facility have a copy of the Inspection Plan? ✓Yes ___No

DATE 11/13/92
FACILITY ID FLD 984 171 694

2. Does the facility have completed inspection logs? ✓ Yes ___ No

3. Were the deficiencies corrected in a timely manner? ✓ Yes ___ No

4. Are the inspection logs maintained at the facility for 3 years? ✓ Yes ___ No

5. Is the facility equipped to prevent fire, explosion or contamination of the environment and is the equipment in working condition? ✓ Yes ___ No

Personnel Training (264.16) 264___ Permit Condition___

1. Does facility have copy of training plan? ✓ Yes ___ No

2. Does facility have personnel training records? ✓ Yes ___ No

3. Has management completed training? ✓ Yes ___ No

4. Have laborers completed training? ✓ Yes ___ No

5. Is training successfully completed within 6 months of hiring/transfer to HW position? ✓ Yes ___ No

6. Has the training been conducted as stated in the Training Plan? ✓ Yes ___ No

7. Do the facility personnel training records include:

   a. Job title and description of position? ✓ Yes ___ No

   b. Description of employee's training? ✓ Yes ___ No

8. Are records maintained for 3 years? ✓ Yes ___ No

Ignitable, Reactive, or Incompatible Waste (264.17) 264___ Permit Condition___

1. Is the waste separated and confined from sources of ignition or reaction, sparks, spontaneous ignition, and radiant heat? ✓ Yes ___ No

2. Are "No Smoking" signs posted in the area? ✓ Yes ___ No

DATE 11/13/92
FACILITY ID FAD 984171674

Preparedness and Prevention (264.30-.37) 264___ Permit Condition___

1. Is there evidence of fire, explosion or contamination of the environment? ✓Yes ___No

2. Is the facility equipment located in accordance with the approved plan and is it functional? ✓Yes ___No

Contingency Plan and Emergency Procedures (264.50-56) 264___ Permit Condition___

1. Does the facility have a copy of the Contingency Plan? ✓Yes ___No

2. Has the plan been amended and have the amendments been approved? ✓Yes ___No

3. Were the plan revisions submitted to all authorities? ✓Yes ___No

4. Is the emergency coordinator on-site or within short driving distance of plant at all times? ✓Yes ___No

5. Verify equipment location. Is it in working condition? ✓Yes ___No

Manifest System, Recordkeeping and Report (264.70-77) 264___ Permit Condition___

1. Does the facility have copies of the Manifest? ✓Yes ___No

   a. Are the manifests signed and dated and returned to the generator? ✓Yes ___No

   b. Is a signed copy given to the transporter? ✓Yes ___No

   c. Are there any manifests that have not been completely filled out? ✓Yes ___No

2. Are copies of the manifest retained for three years? ✓Yes ___No

3. Has the facility received any shipments of hazardous waste which were inconsistent with the manifest? ✓Yes ___No

DATE 11/13/92
FACILITY ID FLD 984 171 694

a. If yes, has he attempted to reconcile the discrepancy with the generator and transporter? ✓Yes ___No

b. If no, has DER been notified? ✓Yes ___No

4. Does the facility have operating records that show a description and quantity of each hazardous waste and the date and method of T,S,D at the facility? ✓Yes ___No

5. Does location and quantity of hazardous waste agree with operating record? ✓Yes ___No

Groundwater Monitoring (264.90-.100) 264___ Permit Condition___

1. Does the facility have a copy of the Groundwater Plan? ___Yes ___No

2. Does the facility have copies of the groundwater analysis? ___Yes ___No

3. Has the analysis been conducted as specified? ___Yes ___No

4. Has there been a statistically significant increase of the value for the parameter from background? ___Yes ___No

5. Did the facility notify the Department of the parameter that showed a statistically significant increase within 7 days? ___Yes ___No

6. Verify location of wells? ___Yes ___No

7. Verify condition of wells and check for caps and locks? ___Yes ___No

Closure and Post-Closure (264.110-.120) 264___ Permit Condition____

1. Is a copy of the approved plan and all revisions kept at the facility? ✓Yes ___No

2. Does the maximum inventory of wastes at the facility exceed that specified in the Closure Plan? ___Yes ✓No

3. Does the facility have an approved post-closure plan (for land disposal facilities)? ___Yes ___No

DATE 11/13/92
FACILITY ID FLD 984171690

4. Has the plan been amended and approved by the Department and distributed to the appropriate agencies? ✓ Yes ___ No

Financial (264.140-.151) 264___ Permit Condition___

1. Does the facility have a written estimate, in current dollars, of the cost of closing the facility? ✓ Yes ___ No

2. Has the financial assurance been updated for the last year? ✓ Yes ___ No

3. Is the facility in compliance with the financial assurance regulation with respect to:

Closure cost?		✓ Yes	___ No
Post-closure cost?	___ N/A	___ Yes	___ No
Sudden liability?		✓ Yes	___ No
Non-sudden liability?	___ N/A	___ Yes	___ No

Date 11/13/92
Inspector GRAY PELUSO, McKEE
Facility ID# FLD

TSD CONTAINERS CHECKLIST (264.170-264.178)
264___ Permit Condition___

1. Are the containers in good condition (264.171)? ✓ Yes ___ No

2. Are the containers managed in accordance with the permit (264.171)? ✓ Yes ___ No

3. Is the number of containers equal to or below the max inventory for the permit? ✓ Yes ___ No

4. Are the containers in the designated bays by waste type? ✓ Yes ___ No

5. Is the waste stored in the specified container? ✓ Yes ___ No

6. Are containers holding hazardous waste opened, handled or stored in such a manner as to cause the container to rupture or leak (264.173(b))? ___ Yes ✓ No

   Explain.

7. Are each of the containers inspected at least weekly (264.174)? ✓ Yes ___ No

8. Is the secondary containment system functional and are free liquids removed and managed in accordance with the permit? ✓ Yes ___ No

9. Are containers holding ignitable or reactive wastes located at least 15 meters (50 feet) from the facility property line? ✓ Yes ___ No

10. Is there sufficient aisle space to allow unobstructed movement and inspection? ✓ Yes ___ No

11. Specific Condition on Permit:

    _____ ___ Yes ___ No

    _____ ___ Yes ___ No

    _____ ___ Yes ___ No

Date 11/13/92
Inspector GARY PERUSO, McKEE
Generator EPA ID# _____

TSD TANKS CHECKLIST
(40 CFR Part 264, Subpart J - Tank Systems)

NOTE: If multiple tanks exist, list each tank and specify compliance or noncompliance on the facility's site plan. Indicate on site diagram which tanks are not in compliance.

1. Are tanks presently used to accumulate waste? ✓ Yes ___ No

2. Are there any exempt tank systems present (Closed-loop Recycling System - 261.4(a)(8))? ___ Yes ✓ No

3. Assessment of the integrity of existing tank systems (264.191):

   a. Number of existing tank systems without secondary containment (264.193) in operation, or for which installation commenced on or prior to July 14, 1986? 0

   b. Number of existing tank systems without secondary containment (264.193) in operation, or for which installation commenced on or prior to the date the contained waste became hazardous (after 7/14/86)? 0

   c. Are assessments on file for each of these tank systems (a & b)? ✓ Yes ___ No

   If yes, do the following apply?

   (1) Assessment conducted by 1/12/88? ✓ Yes ___ No

   (2) For wastes becoming hazardous after 7/14/86, was assessment on tank containing such waste conducted within 1 year after the date the waste became hazardous? ✓ Yes ___ No

   (3) Certification(s) by independent, qualified, and registered P.E.(s)? ✓ Yes ___ No

   (4) Integrity assessment(s) results?

   ___ not leaking?

   ___ unfit for use? (see item #8)

Comments:

DATE 9/13/92
FACILITY ID TSD

4. New tank systems or components (264.192):

a. Number of new tank systems or components installed or put into use after 7/14/86? 3

b. Are assessments on file for each of the new tank systems or components? ✓ Yes ___ No

If yes, do the following apply:

(1) Assessment(s) certified by an independent, qualified, registered P.E.? ✓ Yes ___ No

(2) Assessment(s) include the following information:

- Design standards (including secondary containment unless a variance-264.193(g) has been received)? ✓ Yes ___ No
- Factor affecting corrosion potential of tanks or components in which the external shell or any external metal component is in contact with soil or water (determined by a corrosion expert)? ✓ Yes ___ No
- The type and degree of external corrosion protection that is needed to ensure the integrity of the tank system(s) or components(s) described above (determined by a corrosion expert)? ✓ Yes ___ No
- A determination of design or operational measures that will protect underground tank system components against potential damage from vehicular traffic? ✓ Yes ___ No
- Design considerations to ensure that tank foundations will maintain the load of a full tank? ✓ Yes ___ No
- Tank systems will be anchored to prevent flotation or dislodgement where it is placed in a saturated zone or is located within a seismic fault zone? ✓ Yes ___ No
- Tank systems will withstand the effects of frost heave? ✓ Yes ___ No

c. Are certification statements by a qualified installation inspector or qualified registered professional engineer on file to attest:

(1) to proper tank system or component installation, tank system tightness, and that necessary repairs were performed if needed? ✓ Yes ___ No

(2) That backfill, used for underground tank systems or components, was made up of noncorrosive, porous and homogeneous materials that were placed properly around the system or component to ensure proper support? N/A ___Yes ___No

(3) That ancillary equipment has been supported and and protected against physical damage and excessive stress due to settlement, vibration, expansion or contraction? ✓ Yes ___No

(4) That the type and degree of corrosion protection necessary was provided, based on the certified design assessment of the system? ___Yes ___No

(5) That an independent corrosion expert ensured the proper installation of a corrosion protection system if it was field-fabricated? ✓ Yes ___No

d. Has secondary containment been provided as required in 264.193 (see Item #6)?

(1) Has a variance (264.193(g)) been obtained from secondary containment? ___Yes ___No

Comments:

5. Containment and detection of releases (264.193).

NOTE: Tank systems storing hazardous waste that contain no free liquids and are located within buildings with impermeable floors are exempt from these requirements (264.190(a)).

a. How old are the existing tank systems? ___

(1) If not known, what is the age of the facility? ___

b. How many existing systems are being used to store or treat dioxin containing wastes: F020, F021, F022, F023, F026, and F027? 0

c. Are there any existing tank systems which are used to store or treat materials which became hazardous wastes after 1/12/87? ___Yes ___No

(1) How many? ___

d. Use the guidelines in 264.193(a)(1)-(5) to determine when secondary containment meeting the requirement of 264.193 is to be provided (use narrative explanation sheet if necessary).

e. Have any variances (264.193(g)) from secondary containment been requested for existing tank systems? ___Yes ✓No

f. Are leak tests meeting the requirements of 264.191(b)(5) conducted annually for non-enterable underground tanks without secondary containment? N/A ___Yes ___No

g. Are leak tests as described above, or internal inspections or other tank integrity examinations done by an independent, qualified, registered P.E. annually for all other types of tanks systems and ancillary equipment? ___Yes ___No

h. Are records of the results of leak tests or other tank integrity assessments kept on file? ___Yes ___No

i. Were any tank systems or components found to be leaking or unfit for use as a result of leak tests or other assessments?

NOTE: If the answer is yes, refer to item #8 - Response to leaks or spills and disposition of leaking or unfit-for-use tank systems (264.196).

Comments:

6. Secondary containment systems (264.193(b)-(f)).

a. Has secondary containment been provided for any tank system or component (see Items 4.d., 5.d, and 9.f)? ✓Yes ___No

b. If yes, has the containment system been:

(1) Designed, installed, and operated to prevent any migration of wastes or accumulated liquid out of the system to the soil, ground water, or surface water at any time during its use? ✓Yes ___No

(2) Capable of detecting and collecting releases and accumulated liquids until the collected material is removed? ✓Yes ___No

DATE_____

FACILITY ID_____

c. To satisfy b., has the containment system been:

(1) Constructed of or lined with materials that are compatible with the waste(s) to be contained? ✓ Yes ___ No

(2) Provided with sufficient strength and thickness to prevent failure due to pressure gradients, physical contact with waste it is exposed to, climatic conditions, the stress of installation, and the stress of daily operations including vehicular traffic? ✓ Yes ___ No

(3) Placed on a foundation or base capable of providing support to the system, resistance to pressure gradients above and below, and protection against failure due to settlement, compression or uplift? ✓ Yes ___ No

(4) Provided with a leak detection system that is designed and operated so that it will detect the failure of either the primary and secondary containment structure or any release of waste or accumulated liquid into the secondary containment system within 24 hours or at the earliest practicable time based on existing leak detection technology and site conditions? ✓ Yes ___ No

(5) Sloped or otherwise designed or operated to drain or remove liquids resulting from leaks, spills, or precipitation? ___ Yes ___ No

d. Which device below is used to provide secondary containment for tanks? (Check those that apply.)

___(1) A liner (external to the tank)
✓(2) A vault
___(3) A double-walled tank
___(4) An equivalent device approved by the Department.

e. If an external liner system is used, has it been: N/A

(1) Designed or operated to contain 100% of the capacity of the largest tank within its boundary? ___ Yes ___ No

(2) Designed or operated to prevent run-on or infiltration of precipitation into the system? ___ Yes ___ No

NOTE: If the containment collection system has sufficient excess capacity - able to contain precipitation from a 25-year, 24-hour rainfall event - this feature is not necessary.

(3) Determined to be free of cracks and gaps? ___Yes ___No

(4) Designed and installed to completely surround the tank and to cover all surrounding earth to prevent lateral and vertical migration of waste? ___Yes ___No

f. If a vault system is used, has it been:

(1) Designed or operated to contain 100% of the capacity of the largest tank within its boundary? ___Yes ___No

(2) Designed or operated to prevent run-on or infiltration of precipitation into the system (see note above)? ___Yes ___No

(3) Constructed with chemical-resistant water stops in place at all joints (if any)? ___Yes ___No

(4) Provided with an impermeable interior coating or lining that is compatible with the accumulated waste to prevent migration into the concrete? ___Yes ___No

(5) Provided with protection against the formation and ignition of vapors within the vault if the wastes being accumulated are ignitable or reactive? ___Yes ___No

(6) Provided with an exterior moisture barrier or otherwise designed or operated to prevent migration of moisture into the vault (if it is subject to hydraulic pressure)? ___Yes ___No

g. If double-walled tanks are used, are they:

(1) Designed as an integral structure so that the outer shell will contain releases from the inner tank? ___Yes ___No

(2) Protected, if constructed of metal, from corrosion on the inner tank interior and outer shell exterior? ___Yes ___No

(3) Provided with a built-in, continuous leak detection system capable of detecting a release within 24 hours or at the earliest practicable time based on existing technology and site conditions? ___Yes ___No

Comments:

DATE 11/13/92
FACILITY ID FLD 984171694

7. General operating requirements (264.194).

a. Is there any evidence of ruptures, leaks, corrosion, or failure in the tank system or ancillary equipment? ___Yes ✓No

NOTE: If the answer is yes, explain in the narrative report.

b. Are appropriate controls and practices such as the following used to prevent spills and overflows from tanks or secondary containment systems:

(1) Spill prevention controls (e.g, check valves, dry discount couplings, etc.)? ___Yes ___No

(2) Overfill prevention controls (e.g., level sensing devices, high level alarms, automatic feed cutoff, or bypass to a standby tank)? ___Yes ___No

(3) Maintenance of sufficient freeboard in uncoverd tanks to prevent overtopping by wave, wind action, or precipitation? ___Yes ___No

c. Have any leaks or spills occurred in a tank system or its ancillary equipment? ___Yes ___No

NOTE: If the answer is yes, explain what steps were taken in response to this situation in the narrative report (see item #8 - 264.196).

Comments:

8. Inspections (264.195).

a. Does the owner/operator follow a schedule and procedure for inspecting overfill controls? ✓Yes ___No

b. Does the owner/operator inspect the following, each operating day, where present:

(1) Aboveground portions of the tank system to detect corrosion or releases of waste? ✓Yes ___No

(2) Data gathered from monitoring equipment and leak detection equipment (e.g. pressure and temperature guages, monitoring wells)? ✓Yes ___No

(3) The construction materials and the area immediately surrounding the externally accessible portion of the tank system including secondary containment structures (e.g. dikes) to detect erosion or signs of releases of hazardous waste (e.g. wet spots, dead vegetation)? ___Yes ___No

b. Are cathodic protection systems, if present, inspected according to the following schedule:

(1) Six months to confirm the proper operation of the cathodic protection system after the initial installation, and annually thereafter? ___Yes ___No

(2) Every other month to inspect sources of impressed current? ___Yes ___No

c. Are the inspection results documented in the operating record of the facility?

Comments:

9. Response to leaks or spills and disposition of leaking or unfit-for-use tank systems (264.196).

a. If a tank or secondary containment system has a leak or a spill has occurred, was the system immediately removed from service and the flow of hazardous waste into the system immediately stopped? ___Yes ___No

(1) If the release was from the tank system, was as much of the waste as necessary removed within 24 hours or at the earliest practicable time after its detection to allow inspection and repair to be performed? ___Yes ___No

(2) If the release was to the secondary containment system, were all released materials removed within 24 hours or in as timely a manner as possible to prevent harm to human health and the environment? ___Yes ___No

b. If there was a visible release to the environment, was a visual inspection conducted by the owner/operator? ___Yes ___No

(1) Was further migration of the leak or spill to soils or surface water prevented? ___Yes ___No

(2) Was the visible contamination removed and properly disposed of? ___Yes ___No

c. Was the release to the environment reported to the Department within 24 hours of detection? ___Yes ___No

NOTE: A leak or spill of less than or equal to a quantity of one pound of hazardous waste and that is immediately contained and cleaned up is exempted from this requirement.

d. Was a report to the Department, as specified in 264.196(d)(3), submitted within 30 days for nonexempt releases? ___Yes ___No

e. If a leak was the cause of a release, was the system repaired before being returned to service? ___Yes ___No

f. If the leak caused a release to the environment from a component of a tank system without secondary containment, was that component provided with secondary containment as specified in 264.193 before it was returned to service (see Item #6)? ___Yes ___No

NOTE: If the leaking component is aboveground and can be inspected visually, secondary containment does not need to be provided after repair.

***: If a component was replaced in order to repair the system, the owner or operator must comply with the standards for new tank systems or components 264.192 and 264.193 (see item #4).

g. Was a major repair performed to return the tank system back to service? ___Yes ___No

(1) If yes, was a certification of this major repair done by an independent, qualified, registered P.E. before the system was returned to service? ___Yes ___No

(2) Was this certification submitted to the department within 7 days after returning the system to service? ___Yes ___No

Comments:

DATE_____

FACILITY ID_____

10. Closure and post-closure care (264.197).

a. At closure of a tank system, did the owner/operator remove or decontaminate all waste residues, contaminated containment system components, contaminated soils, and structures and equipment contaminated with waste, and manage them as hazardous waste? ✓ Yes ___ No

Comments:

11. Special requirements for ignitable or reactive wastes (264.198).

a. Are ignitable or reactive wastes placed in tanks? ✓ Yes ___ No

(1) If yes, are they treated, rendered, or mixed before or immediately after placement in the tank system so that:

- The resulting waste, mixture, or dissolved material no longer meet the definition of ignitable or reactive waste and 264.17(b) is complied with? ___ Yes ___ No

OR

- The waste is stored or treated in such a way that is protected from any material or conditions that may cause the waste to ignite or react? ✓ Yes ___ No

NOTE: If yes, use narrative explanation sheet to describe separation and confinement procedures. If no, use narrative explanation sheet to describe sources of ignition or reaction.

OR - The tank system is used solely for emergencies? ___ Yes ___ No

b. Are protective distances maintained between the tank accumulation areas and any public ways, streets, alleys, or adjoining property lines that can be built upon as required in Tables 2-1 through 2-6 of the National Fire Protection Association's "Flammable and Combustible Liquids Code"? ✓ Yes ___ No

Comments:

DATE_____

FACILITY ID_____

12. Special requirements for incompatible wastes (264.199).

a. Is there evidence that incompatible wastes were in the same tank? ___Yes ___No

NOTE: If yes, use narrative explanation sheet to state the results (e.g. signs such as fire, toxic mists, heat generation, bulging containers, etc.) and whether 264.17(b) was complied with.

b. If a waste is to be placed in a tank that previously held an incompatible waste or material, was that tank washed? ___Yes ___No

NOTE: If yes, describe the washing procedure on the narrative explanation sheet. If no, was 264.17(b) complied with? ___Yes ___No

13. Specific Conditions on Permit:

_____ ___Yes ___No

_____ ___Yes ___No

_____ ___Yes ___No

_____ ___Yes ___No

RCRA INSPECTION REPORT
LAND DISPOSAL RESTRICTIONS CHECKLIST

Facility ID#: FLD 984171694 Date of Inspection: 11/13/92

Facility Name: SAFETY-KLEEN / MEDLEY

Facility Address: 8755 N.W. 95TH STREET

MEDLEY, FLORIDA 33178

Facility Phone #: 305 884-0123 Facility Contact: JORGE CARVAJAL

Contact's Title: BRANCH MANAGER

Persons present for Inspection: TIM GRAY, VINCE PERUSO

KNOX McKEE - FDER

JORGE CARVAJAL, JUAN FORMOSO - S-K

Date and Time Inspection Began: 11/13/92 10:00 AM

Date and Time Inspection Ended: 11/18/92 12:30 PM

I. (a) Describe the generator's restricted waste streams (use the LDR Treatment Standards list) and the destination of each:

D001 - LIQUID AND DUMPSTER MUD

F002 - PERCHLOROETHYLENE

F003/F005 - PAINT RELATED WASTE

D008/~~D018~~ D039 - WASTE ANTIFREEZE

D004 - D011, D018, D019, D021 - D030, D032 - D043 - FRS WASTE

TAMPA, FL
LEXINGTON, S.C.

Revision # 1
Date 3-12-91

(b) Are the wastes correctly identified? (You may need to review TOC, TSS, HOC, TCLP, PFLT, 3rd Thirds WW, NWW, Technology Acronyms, Tables 268.41, 268.42 & 268.43.) [268.7 Notices for 3rd Thirds includes variance until 8-8-90: Minimum Technology]

YES

(c) Is the generator storing restricted waste on site?

YES

Is the generator complying with 268.50?

YES

Is the generator complying with 262.34 as required by 268.50(a)(1)?

YES

Are the wastes identified correctly?

YES

Revision # 1
Date 3-12-91

Have LDR wastes been stored over 90 days (generator)?

YES

If the facility is a TSD and has been storing LDR wastes for over a year, can the TSD prove (if challenged) that the reason for such storage is solely for the purpose of accumulation of such quantities of hazardous waste as are necessary to facilitate proper recovery, treatment, or disposal?

NO

(d) Does the generator have a case-by-case extension or a variance? (specify)

II. Waste with Treatment Standards

(a) Do the Notifications required by 268.7 include:

EPA Hazardous Waste #:

Applicable Treatment Standards or proper reference for wastes other than F001-F005, F020-F023, F026-F028, and California List (3rd Third Rule):

Manifest Document #'s:

Waste Analysis Data, where available:

Certification Statement if Generator is Claiming to meet Treatment Standards:

Date Waste is Subject to Prohibitions if Subject to a Case-By-Case Extension or Variance:

III. Does the generator maintain the above records on-site for five (5) years?

YES

IV. Additional Notes and Comments:
(Check for soft hammer compliance prior to May 8, 1990.)

Revision # 1
Date 3-12-91

Florida Department of Environmental Regulation

Southeast District • 1900 S. Congress Ave., Suite A • West Palm Beach, Florida 33406

Lawton Chiles, Governor

Telephone: 407/433-2650
Fax: 407/433-2666

Carol M. Browner, Secretary

HAZARDOUS WASTE INSPECTION REPORT

1. Inspection Report ___ Complaint X Routine ___ Follow-up ___ Permitting
   Facility Name SAFETY-KLEEN / MEDLEY DER/EPA ID FLD 984171694
   Address 8255 N.W. 25TH STREET
   Mailing Address MEDLEY, FL. 33178
   County DADE Phone (305) 884-0123 Date 11/13/92 Time 10:00AM

TYPE OF FACILITY

Generator	Storage	Treatment
X Generator (>1000 kg/mo	X Container	___ Tank
___ SQG (100-1000 Kg/mo)	X Tank	___ Land Treatment
___ CESQG (<100 kg/mo)	___ Waste Pile	___ Thermal
___ Non-Handler	___ Surface Impoundment	___ Chem/Phys/Bio
		___ Incinerator
Transporter	**Disposal**	___ Surface Impoundment
X Transporter	___ Landfill	
___ Transfer Facility	___ Surface Impoundment	
	___ Waste Pile	

2. Applicable Regulations:
   ___ 40 CFR 261.5 X 40 CFR 262 X 40 CFR 263 ___ 40 CFR 264
   ___ 40 CFR 265 ___ 40 CFR 266 X 40 CFR 268

3. Responsible Official:
   JORGE CARVAJAL - GENERAL MANAGER

4. Survey Participants and Principal Inspector:
   TIM GRAY, VINCE PRUSO, KNOX MCKEE - FDER
   JUAN FORMOSO, JORGE CARVAJAL - SAFETY-KLEEN

5. Facility Latitude: Longitude:

6. Type of Ownership: FEDERAL STATE COUNTY MUNICIPAL PRIVATE

7. Permit No.:_____ Date Issued:_____ Expiration Date:_____

8. Pre-arranged Inspection: ___ Yes ___ No Preinspection letter mailed.

Recycled Paper

9. Facility Description:

10. Summary of Alleged Violations:

11. Recommendaitons:

Report prepared by:_____
Date:_____

Florida Department of Environmental Regulation

Southeast District • 1900 S. Congress Ave., Suite A • West Palm Beach, Florida 33406 •

Scott Benyon, Deputy Assistant Secretary

HAZARDOUS WASTE SITE INSPECTION
EXIT INTERVIEW SUMMARY

FACILITY: SAFETY-KLEEN / MEDLEY DATE: 11/13/92

This exit interview is the Department's attempt to advise you early in the process of possible violations of Florida Administrative Code Chapter 17-30, which adopts 40 CFR Parts 260-266 by reference. It is possible that the list of violations noted (checked) is incomplete. After Department internal review an inspection report will be finalized. In most cases the deficiencies noted by the investigator will not change in the final report, therefore, you are advised to immediately begin correcting these deficiencies noted below.

Please also be aware that the Department has signed an enforcement agreement with the USEPA which calls for the assessment and collection of monetary penalties when violations, such as these, are noted. While your quick response in correcting the deficiencies may not reduce calculated penalties, continued non-compliance may result in greater penalty liability.

The following violations have been tentatively identified:

____ 1. Hazardous waste determination [§262.11]. (See comments below).
____ 2. Notification as a generator [§262.12].
____ 3. Manifest deficiencies [§262 Subpart B].
____ 4. Recordkeeping [e.g. test results, manifest, annual reports; §262.44].
____ 5. Personnel training [§265.16; §262.34(d) for SQG].
____ 6. Contingency Plan and Emergency Planning [§265 Subpart D; §262.34(d) for SQG].
____ 7. Arrangements with local authorities [§265.37].
____ 8. Emergency equipment [§265.32].
____ 9. Aisle space [§265.35].
✓ 10. Container and tank labels [§265.34].
____ 11. Open containers [§265.173].
____ 12. Condition of containers [§265.171].
____ 13. 50 foot rule for containers [265.176].
____ 14. Tank requirements [§265 Subpart J].
____ 15. "No smoking" signs or other ignitable/reactive requirements [§265.17].
____ 16. Annual reporting [F.A.C. 17-30].
____ 17. Accumulating >1000 kg without meeting 100-1000 kg/month standards [§261.5].
____ 18. Ensuring delivery of HW to a proper HW facility [§261.5].
____ 19. Notification as a TSD facility [§264.11].
____ 20. Treatment without a permit [F.A.C. 17-30].
____ 21. Storage without a permit [F.A.C. 17-30].
____ 22. Disposal without a permit [F.A.C. 17-30].
____ 23. Groundwater monitoring [§264 Subpart G].
____ 24. Closure/post-closure [§264 Subpart G].
____ 25. Notice in Deed [§264.120].
____ 26. Financial responsibility [§264 Subpart H].
____ 27. Other violations (see comments).

Comments: IN LINE VALVES TO SAFETY CAN SATELLITE ACCUMULATION CONTAINERS, LOCATED UNDER THE DOCK, IN THE FILL/RETURN AREA, WERE LEFT IN THE OPEN POSITION.

RECEIPT ACKNOWLEDGED BY

INVESTIGATOR

drd/88

safety-kleen

JAN 11 1993

Dept. of Environmental Reg.
West Palm Beach

January 8, 1993

SENT VIA FEDERAL EXPRESS
MAIL - January 8, 1993
AirBill 6097235152

Mr. Vic Kamath, P.E..
Hazardous Waste Section
Florida Department of
Environmental Regulation
Southeast District
1900 South Congress Avenue, Suite A
West Palm Beach, Florida 33406

RE: Safety-Kleen, Corp., Medley FLD 984 171 694
Operating Permit HO13-216311
Subpart BB Piping and Valve Schematic

Dear Mr Kamath:

Enclosed are three copies of the environmental piping schematic for the waste mineral spirits and waste antifreeze tanks in the application for permit HO13-216311 for the referenced facility. This page should replace the page currently in the application.

The submittal of this schematic fulfills a commitment made to Knox McKee in a letter dated December 22, 1992.

Please contact me at (813)682-8094 should you have any questions.

Sincerely,

Victor L. San Agustin, P.E.
Regional Environmental Manager
Tampa Region

Enclosure

c: C. Norton - ERM, South

129 S. KENTUCKY AVE, SUITE 701 LAKELAND, FL 33801 PHONE 813/682-8094 FAX 813/688-3683

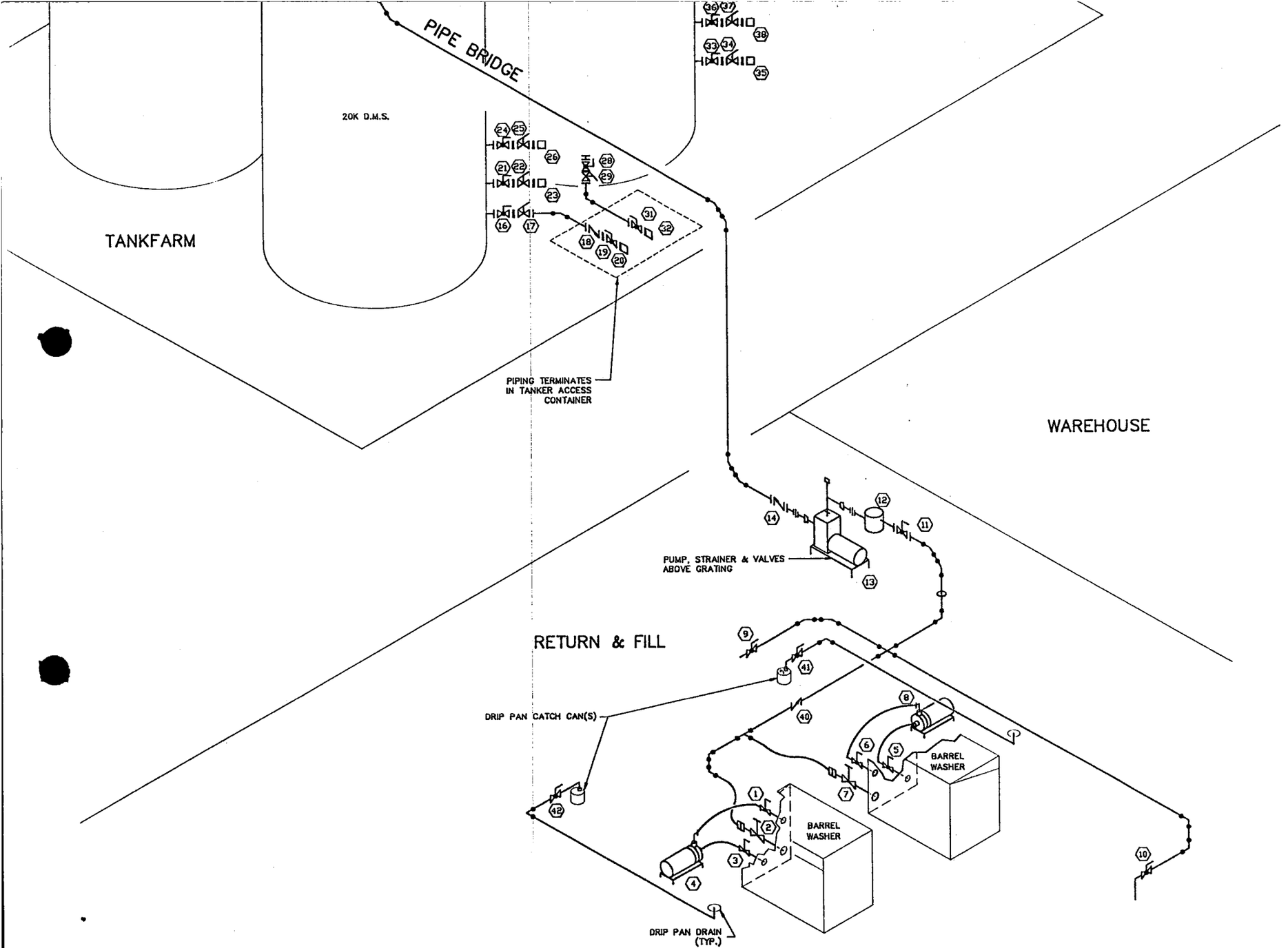

(14)	2" FLANGED CHECK VALVE
(15)	3/8" AUTOMATIC VACUM BREAKER
(16)	3" FLANGED BALL VALVE
(17)	3" FLANGED EXTERNAL EMERGENCY GATE VALVE
(18)	3" FLANGED CHECK VALVE
(19)	3" FLANGED BALL VALVE
(20)	3" FLANGED CAM LOCK
(21)	3" FLANGED BALL VALVE
(22)	3" FLANGED EXTERNAL EMERGENCY GATE VALVE
(23)	3" FLANGED CAM LOCK
(24)	3" FLANGED BALL VALVE
(25)	3" FLANGED EXTERNAL EMERGENCY GATE VALVE
(26)	3" FLANGED CAM LOCK
(27)	3" PRESSURE VACUM BREAKER
(28)	3" FLANGED BALL VALVE
(29)	3" FLANGED EXTERNAL EMERGENCY GATE VALVE
(31)	3" FLANGED BALL VALVE
(32)	3" FLANGED CAM LOCK
(33)	3" FLANGED BALL VALVE
(34)	3" FLANGED EXTERNAL EMERGENCY GATE VALVE
(35)	3" FLANGED CAM LOCK
(36)	3" FLANGED BALL VALVE
(37)	3" FLANGED EXTERNAL EMERGENCY GATE VALVE
(38)	3" FLANGED CAM LOCK
(39)	3" PRESSURE VACUM BREAKER
(40)	2" CHECK VALVE
(41)	1" BALL VALVE
(42)	1" BALL VALVE

NO.	DESCRIPTION	BY	CHK	APPR	DATE
B	ADDED TAGS 40,41 & 42	MBH	KJM	-	010492
A	RELEASED FOR PART "B" PERMIT	MBH		-	071092

REVISIONS

PROPRIETARY STATEMENT

THIS DRAWING IS THE EXCLUSIVE PROPERTY OF SAFETY-KLEEN CORP. AND IS PROPRIETARY AND CONFIDENTIAL INFORMATION. THIS DRAWING AND THE INFORMATION CONTAINED THEREIN MUST NOT BE DUPLICATED, USED, DIVULGED, REPRODUCED, COPIED, DISCLOSED OR APPROPRIATED IN WHOLE OR IN PART FOR ANY PURPOSE OTHER THAN AS EXPRESSLY AUTHORIZED BY SAFETY-KLEEN CORP. THIS DRAWING MUST BE RETURNED PROMPTLY UPON REQUEST.

TITLE

ENVIRONMENTAL PIPING SCHEMATIC – EXISTING

SAFETY-KLEEN CORP.
777 BIG TIMBER ROAD ELGIN, ILLINOIS 60123 PHONE 708-697-8460

SCALE	BY	CHKD	APPROVED	OPERATIONS	DATE
NONE	MBH		–	–	07-09-92

SERVICE CENTER LOCATION	SC-DWG NUMBER	REV. NO.
MEDLEY, FL.	309702-GDPB200	B

safety-kleen®

RECEIVED
DEP, of Environmental Reg.
West Palm Beach

December 30, 1992

Sent Via Certified Mail
P 383 205 953
Return Receipt Requested

Mr. Tim Gray
Hazardous Waste Section
Florida Department of Environmental
Regulation - Southeast District
1900 South Congress Ave
West Palm Beach, Florida 33406

Subject: Unmanifested Waste Report
Medley Facility, Dade County
FLD 984 171 694

Dear Mr. Gray:

Pursuant to 40 CFR 264.76, the following information is being submitted for an unmanifested waste shipment. Enclosed is information provided in lieu of a completed Form 8700-13B.

We tried to obtain this form from your office and EPA Region IV but a copy was not available. There are no forms in the booklet pertaining to filling an unmanifested waste report.

Hazardous waste was transported from 1 customer without a manifest. Enclosed as Appendix A is the report. The appendix provides information required under 40 CFR 264.76

Your cooperation and understanding in this regard is requested. If you have any questions, please call me at (813)682-8094.

Sincerely,

Juan M. Formoso
Branch Facility Manager
Medley Branch

cc; Mike Redig H.W.S. Tallahassee
Norton Tire

777 BIG TIMBER ROAD ELGIN, ILLINOIS 60123 PHONE 312/697-8460 TELEX 910 251 4479

Appendix A -
Unmanifested Waste from Norton Tire

A. EPA ID Number, Name, and Address of Facility:

Safety-Kleen Corporation
8755 NW 95 Street
Medley, Florida 33178
EPA ID # FLD 984 171 694

B. Date Facility Received Waste:

December 18, 1992

C. EPA ID Number, Name, and Address of Generator and Transporter:

Generator: Norton Tire Co.
1700 N.E. 163rd Street
North Miami Beach, FL 33162
EPA ID # FLD 981 746 191

Transporter: Safety-Kleen Corporation
777 Big Timber Road
Elgin, IL 60123
EPA ID # ILD 051 060 408

D. Description and Quantity of Each Unmanifested Hazardous Waste and Facility Received:

Waste Description: RQ Hazardous Waste Liquid N.O.S.
(Waste Antifreeze)
9NA3082 PG III (D008)(ERG#31)
Hazardous Waste Nos. D008, D039

Quantity: One 250 Gals Container
Total Volume 7 Gals

Facility Received: Safety-Kleen Corporation
8755 NW 95 Street
Medley, Florida 33178
EPA ID # FLD 984 171 694

E. Method of Treatment, Storage, and Disposal:

Waste was stored at the Medley facility in a RCRA permitted Container Storage Area. Waste was then transferred to Safety Kleen's service center in Boynton Beach, Florida. The waste was pumped into the facility's permitted antifreeze storage tank.

F. Explanation of Why Waste Was Unmanifested:

The waste was transported in a 250 gallon container from Norton Tire Co. last December 18, 1992. The antifreeze container was transported by our service rep who underestimated the amount of residue. Branch personnel noticed the residue and confirmed that approximately 6 to 7 gallons remained inside the 250 gallon container. That amount of residue did not qualify to be considered as being "RCRA empty" pursuant to 40 CFR 261.7 Therefore, this report was generated to comply.

There is no excuse for this incident and all reps have been re-instructed not to pick-up any container with excessive residue without manifesting.

G. Certification Signed by Authorized Representative:

This is to certify that the above information is true and correct to the best of my knowledge:

Juan M. Formoso
Branch Facility Manager

ELGIN

safety-kleen

777 Big Timber Road
Elgin, Illinois 60123

D-U-N-S 05106-0408 FED. ID NO. 39-6090019

MANUAL ORDER FORM

M 79555

MANIFEST NUMBER

GENERATOR

3-097-02-7868.
CUSTOMER NUMBER

NORTON TIRE Co.
NAME

1700 NE 163 St.
ADDRESS

N.M.B. FL. 33162
CITY/STATE ZIP

BILL TO

— — — .
CUSTOMER NUMBER

NAME

ADDRESS

CITY/STATE ZIP

SERVICE DATE	SALESMAN'S NO.	SALES SPECIALIST	CUSTOMER P.O. NUMBER	SALES TAX EXEMPTION NO.	SERV. TAX %	C.O.M.S. TAX %	PROD. TAX %	SVC - P/S	PROD. P/S
12/18/92	6809								

MACHINE SERVICE SECTION

MACHINE NUMBER	SERVICE CHARGE	SALES TAX	TOTAL CHARGE	SERVICE TERM (WEEKS)	CHANGE SERVICE TO (WEEKS) (INITIAL)	REMARKS
	ANTI-FREEZE			CTNR.		
TOTAL SERVICE SECTION						

GENERATOR US EPA ID NO. FLD981746191

GENERATOR STATE ID NO.

USED MANUAL ORDER BECAUSE:

- ☐ PRE-PRINT MISPLACED
- ☐ PRE-PRINT NOT RECEIVED
- ☐ CUSTOMER REQUESTED EARLY SERVICE
- ☐ SCHEDULING REALIGNMENT
- ☒ CUSTOMER NEEDED PRODUCT
- ☐ _____

OTHER - EXPLAIN

SPENT SOLVENT MEETS ACCEPTANCE CRITERIA YES ☐ NO ☐

HAZARDOUS WASTE INFORMATION

CONTAINERS: PAILS NO. DM	SSPW TANKS DF	16 GAL NO. DM	30 GAL NO. DM	TOTAL LBS. OR GAL

"This is to certify that the below-named materials are properly classified, described, packaged, marked and labeled, and are in proper condition for transportation according to the applicable regulations of the Department of Transportation."

US DOT DESCRIPTION (INCLUDING PROPER SHIPPING NAME, HAZARD CLASS, AND ID.)

Waste Petroleum Naphtha, Combustible Liquid, UN1255 (EPA, D001, D018, D039) (ERG #27)

RQ Waste Compound, Cleaning, Liquid Corrosive Material, NA1760 (EPA, F002, F004, D006, D007, D008, D022) (ERG #60) PRODUCT NO. 609

RQ Waste Compound, Cleaning, Liquid Corrosive Material, NA1760 (EPA, D006, D007, D008, D018, D021, D027, D039, D040) (ERG #60) PRODUCT NO. 699

I certify that my total waste streams are within one of the following categories:

0 to 220 LBS./MONTH _____ Initials

220 LBS. to 2,200 LBS./MONTH _____ Initials

GREATER THAN 2,200 LBS./MONTH _____ Initials

Total Quantity = Number of Drums x Ave. Wt/Drum of: Pails , SSPW TANKS , 16 Gal. , 30 Gal.

DESIGNATED FACILITY NAME AND ADDRESS:

USA EPA ID No.

STATE ID No.

PRODUCT SALES SECTION

PRODUCT NUMBER	DESCRIPTION	MSDS GIVEN	DEALER PRICE	UNIT OF MEASURE	QUANTITY DELIVERED	SALES AMOUNT	TAX	LINE TOTAL
		☐						
	ANTI-FREEZE	☐						
	CTNR-EMPTY - PICK UP.	☒			1	N/C		N/C.
		☐						
		☐						
TOTAL PRODUCT AMOUNTS								

PAYMENT RECEIVED SECTION

CASH ☐

CHECK NUMBER

TOTAL RECEIVED

APPLY PAYMENT TO:
- ☐ TODAYS SERVICE/SALE
- ☐ PREVIOUS BALANCE AS FOLLOWS

INV. # _____ AMOUNT $ _____

INV. # _____ AMOUNT $ _____

INV. # _____ AMOUNT $ _____

TOTAL SERVICE AMOUNT (FROM ABOVE)

CHARGE MY ACCOUNT FOR THIS TRANSACTION UNLESS OTHERWISE INDICATED IN THE PAYMENT RECEIVED SECTION. ALSO I HAVE NOTED THE PRESENCE OF MACHINE, SOLVENT, AND RECLAMATION AGREEMENT INFORMATION ON THE REVERSE SIDE.

TOTAL DUE N/C

INVOICES ARE SUBJECT TO AN INTEREST CHARGE OF THE LESSER OF 1½% PER MONTH (18% PER ANNUM) OR THE MAXIMUM RATE ALLOWED BY LAW ON ANY UNPAID INVOICES THAT ARE NOT PAID WITHIN 30 DAYS.

IN THE EVENT OF DEFAULT, SAFETY-KLEEN SHALL BE ENTITLED TO RECOVER COSTS OF COLLECTION INCLUDING REASONABLE ATTORNEY'S FEES.

IN EVENT OF EMERGENCY CALL 1-800-669-5740 or 1-708-888-4660 (24 hours)

PLEASE SEE REVERSE SIDE FOR IMPORTANT INFORMATION

X _____
GENERATOR/DESIGNATED REPRESENTATIVE SIGNATURE

PRINT NAME C. MORA

Florida Department of Environmental Regulation

Twin Towers Office Bldg. ● 2600 Blair Stone Road ● Tallahassee, Florida 32399-2400

Lawton Chiles, Governor

Carol M. Browner, Secretary

December 18, 1992

RECEIVED

DEC 2 4 1992

DEPT. OF ENVIRONMENTAL REG.
WEST PALM BEACH

Pamela Presnell Garvin
Fowler, White et al
P.O. Box 11240
Tallahassee, Florida 32302

RE: State of Florida Department of Environmental Regulation v. Safety Kleen, Case No. 92-769, OGC No. 92-0086C

Dear Pam:

This is in reply to your letter of November 12, 1992, which I have circulated to Department permitting and enforcement staff in Tallahassee and the districts.

After extensive consultation with my colleagues, I feel confident that the Department can prove all the allegations of the complaint and, under the penalty policy and guidelines, justify the original penalty assessment. However, in order to conserve staff resources which would otherwise be applied to litigating this matter, I am authorized to offer the following settlement terms: payment by Safety Kleen of civil penalties and costs totalling $250,000., and Safety Kleen's agreement to assess and remediate contamination at the Delray Beach Georgia Street site in accordance with the terms of the Department's Final Order in OGC Case Number 90-0606.

Please keep in mind, and remind your client, that the complaint does not include any counts for improper disposal of solid or hazardous waste; discharge of hazardous substances; failure to abate a discharge of hazardous substances; or the basic violation, causing pollution. Nor has the Department requested payment of damages for loss of natural resources. I feel that the settlement offer is extremely fair, not to say generous, to your client.

I look forward to your prompt response.

Sincerely,

Agusta P. Posner
Assistant General Counsel

Recycled Paper
Printed with Soy Based Inks

~~Via Kamath's~~ Copy
TIM GREY

RECEIVED

NOV 18 1992

Dept. of Environmental Reg.
West Palm Beach

safety-kleen®

November 17, 1992

Sent Via Federal Express
Mail - Nov. 17, 1992

Mr. Knox McKee
Hazardous Waste Section
Florida Department of Environmental
Regulation - Southeast District
1900 South Congress Ave., Suite A
West Palm Beach, FL 33406

Subject: November 13, 1992 RCRA Inspection
Medley Facility, EPA ID # FLD 984 171 694

Dear Mr. McKee:

The purpose of this letter is to respond to an alleged violation and a concern raised during the above mentioned inspection.

This response is a good faith effort to resolve the Department's concerns. It is our intention and expectation that nothing in this letter shall be construed as an admission or used against the company in any administrative or judicial proceeding. The company expressly reserves any and all defenses it might have to the matters set forth during the inspection and does not waive any of those defenses by making this response.

"40 CFR 265.173 - In line valves to safety can satellite accumulation containers, located under the dock, in the fill/return area, were left in the open position."

40 CFR 265.173(a) states that " a container holding hazardous waste must always be closed during storage except when adding or removing waste."

Safety-Kleen does not agree that there has been a violation of 40 C.F.R. 265.173(a). Following inspection by DER personnel, Safety-Kleen personnel inspected the cans located under the dock. Safety-Kleen confirmed that each container was empty. Since the can did not contain hazardous waste, there has been no violation of 40 C.F.R. 265.173(a). However, Safety-Kleen agrees with the DER on the importance of keeping containers containing hazardous waste closed. To avoid any possibility in the future of the valve being open when there is hazardous waste in the container, Branch personnel have been strictly instructed that whether or not each can is empty, the valve must be kept closed at all times except when adding waste.

29 S. KENTUCKY AVE, SUITE 701 LAKELAND, FL 33801 PHONE 813/682-8094 FAX 813/688-3683

The inspectors also expressed a concern that the placement of the satellite containers in their current location may be unsafe. Safety-Kleen does not believe that the current placement of the containers violates any regulatory requirement. However, in an effort to be responsive to the Department's concerns, Safety-Kleen will move the containers from their current location under the dock, to one of the outer sides of the dock area. The cans will be connected via metal piping to the drip pans. We will send you revised drawings showing the new location of these satellite accumulation containers and will mention these containers in the narrative of the Part B application. Safety-Kleen expects to complete these tasks by December 18, 1992.

We hope this letter adequately resolves all Department concerns. If you have any questions, please call me at (813)682-8094.

Sincerely,

Victor L. San Agustin

Victor L. San Agustin, P.E.
Regional Environmental Manager
Tampa Region

cc: Tim Gray, SEFDER
Jeff Smith, SEFDER
Vic Kamath, P.E., SEFDER

Tim Gray's Copy

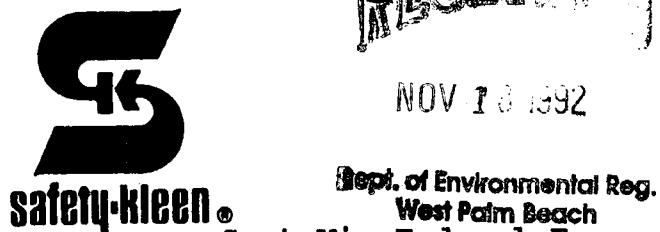

safety-kleen®

November 17, 1992

Sent Via Federal Express Mail - Nov. 17, 1992

Mr. Knox McKee
Hazardous Waste Section
Florida Department of Environmental Regulation - Southeast District
1900 South Congress Ave., Suite A
West Palm Beach, FL 33406

Subject: November 13, 1992 RCRA Inspection
Medley Facility, EPA ID # FLD 984 171 694

Dear Mr. McKee:

The purpose of this letter is to respond to an alleged violation and a concern raised during the above mentioned inspection.

This response is a good faith effort to resolve the Department's concerns. It is our intention and expectation that nothing in this letter shall be construed as an admission or used against the company in any administrative or judicial proceeding. The company expressly reserves any and all defenses it might have to the matters set forth during the inspection and does not waive any of those defenses by making this response.

"40 CFR 265.173 - In line valves to safety can satellite accumulation containers, located under the dock, in the fill/return area, were left in the open position."

40 CFR 265.173(a) states that " a container holding hazardous waste must always be closed during storage except when adding or removing waste."

Safety-Kleen does not agree that there has been a violation of 40 C.F.R. 265.173(a). Following inspection by DER personnel, Safety-Kleen personnel inspected the cans located under the dock. Safety-Kleen confirmed that each container was empty. Since the can did not contain hazardous waste, there has been no violation of 40 C.F.R. 265.173(a). However, Safety-Kleen agrees with the DER on the importance of keeping containers containing hazardous waste closed. To avoid any possibility in the future of the valve being open when there is hazardous waste in the container, Branch personnel have been strictly instructed that whether or not each can is empty, the valve must be kept closed at all times except when adding waste.

129 S. KENTUCKY AVE, SUITE 701 LAKELAND, FL 33801 PHONE 813/682-8094 FAX 813/688-3683

The inspectors also expressed a concern that the placement of the satellite containers in their current location may be unsafe. Safety-Kleen does not believe that the current placement of the containers violates any regulatory requirement. However, in an effort to be responsive to the Department's concerns, Safety-Kleen will move the containers from their current location under the dock, to one of the outer sides of the dock area. The cans will be connected via metal piping to the drip pans. We will send you revised drawings showing the new location of these satellite accumulation containers and will mention these containers in the narrative of the Part B application. Safety-Kleen expects to complete these tasks by December 18, 1992.

We hope this letter adequately resolves all Department concerns. If you have any questions, please call me at (813)682-8094.

Sincerely,

Victor L. San Agustin

Victor L. San Agustin, P.E.
Regional Environmental Manager
Tampa Region

cc: Tim Gray, SEFDER
Jeff Smith, SEFDER
Vic Kamath, P.E., SEFDER

Jeff Smith's Copy
RECEIVED
NOV 13 1992
Dept. of Environmental Reg.
West Palm Beach

safety-kleen®

November 17, 1992

Sent Via Federal Express
Mail - Nov. 17, 1992

Mr. Knox McKee
Hazardous Waste Section
Florida Department of Environmental
Regulation - Southeast District
1900 South Congress Ave., Suite A
West Palm Beach, FL 33406

Subject: November 13, 1992 RCRA Inspection
Medley Facility, EPA ID # FLD 984 171 694

Dear Mr. McKee:

The purpose of this letter is to respond to an alleged violation and a concern raised during the above mentioned inspection.

This response is a good faith effort to resolve the Department's concerns. It is our intention and expectation that nothing in this letter shall be construed as an admission or used against the company in any administrative or judicial proceeding. The company expressly reserves any and all defenses it might have to the matters set forth during the inspection and does not waive any of those defenses by making this response.

"40 CFR 265.173 - In line valves to safety can satellite accumulation containers, located under the dock, in the fill/return area, were left in the open position."

40 CFR 265.173(a) states that " a container holding hazardous waste must always be closed during storage except when adding or removing waste."

Safety-Kleen does not agree that there has been a violation of 40 C.F.R. 265.173(a). Following inspection by DER personnel, Safety-Kleen personnel inspected the cans located under the dock. Safety-Kleen confirmed that each container was empty. Since the can did not contain hazardous waste, there has been no violation of 40 C.F.R. 265.173(a). However, Safety-Kleen agrees with the DER on the importance of keeping containers containing hazardous waste closed. To avoid any possibility in the future of the valve being open when there is hazardous waste in the container, Branch personnel have been strictly instructed that whether or not each can is empty, the valve must be kept closed at all times except when adding waste.

129 S. KENTUCKY AVE, SUITE 701 LAKELAND, FL 33801 PHONE 813/682-8094 FAX 813/688-3683

The inspectors also expressed a concern that the placement of the satellite containers in their current location may be unsafe. Safety-Kleen does not believe that the current placement of the containers violates any regulatory requirement. However, in an effort to be responsive to the Department's concerns, Safety-Kleen will move the containers from their current location under the dock, to one of the outer sides of the dock area. The cans will be connected via metal piping to the drip pans. We will send you revised drawings showing the new location of these satellite accumulation containers and will mention these containers in the narrative of the Part B application. Safety-Kleen expects to complete these tasks by December 18, 1992.

We hope this letter adequately resolves all Department concerns. If you have any questions, please call me at (813)682-8094.

Sincerely,

Victor L. San Agustin

Victor L. San Agustin, P.E.
Regional Environmental Manager
Tampa Region

cc: Tim Gray, SEFDER
Jeff Smith, SEFDER
Vic Kamath, P.E., SEFDER

Florida Department of Environmental Regulation

Twin Towers Office Bldg. ● 2600 Blair Stone Road ● Tallahassee, Florida 32399-2400

Lawton Chiles, Governor

Richard D. Bowman, Secretary

RECEIVED

NOV - 4 1992

DEPT. OF ENVIRONMENTAL REG.
WEST PALM BEACH

November 2, 1992

Pamela Presnell Garvin
Fowler, White et al
P.O. Box 11240
Tallahassee, Florida 32302

RE: State of Florida Department of Environmental Regulation v. Safety Kleen, Case No. 92-769, OGC No. 92-0086C

Dear Pam:

It has been several months now and I still have not had a response from you with respect to the Department's offer to settle this case. I must assume that settlement negotations have broken down, and I am preparing interrogatories, requests for admissions, and requests for production of documents.

If Safety Kleen intends to make a response, I would appreciate receiving it within ten days.

Sincerely,

Agusta

Agusta P. Posner
Assistant General Counsel

Recycled Paper
Printed with Soy Based Inks

DRY CLEANER SERVICE

Safety-Kleen® 777 Big Timber Road • Elgin, Illinois 60123

DUNS NO. 05106-0408 FOR SERVICE CALL
FED ID NO. 39-6090019 TRANSPORTER
305-884-0123 JORGE CARVAJAL
LDR REQ'D

SCHEDULED SERVICE WEEK	SCHEDULED SERVICE TERRITORY	REFERENCE NUMBER
92-40	04	392349

MANIFEST NUMBER 92349

REQ=6P

CUSTOMER

GENERATOR
3-097-52-1259-9
SERVICE SUPREME
7929 N W MIAMI CT
MIAMI FL 33150

BILL TO

SERVICE DATE	SALESMAN'S NO.	SALES SPECIALIST	SALES TAX EXEMPTION NUMBER	HANDLING CODE	CREDIT CODE	ASSOCIATION	PREVIOUS BALANCE	PORTION OVER 60 DAYS
10-2-92	5969				C	5001	65.00	

BUSINESS TYPE	CHAIN	CUSTOMER P.O. NUMBER	GENERATOR/CUSTOMER PHONE #		CART. P/S	BOT P/S	PROD. P/S	SVC TAX	PRODUCT TAX	SERVICE INTERVAL	CHANGE SERVICE
01			305-759-5871	0028	001	001	001	0.0 %	6.5 %	04	

HAZARDOUS WASTE INFORMATION:

"This is to certify that the below-named materials are properly classified, described, packaged, marked and labeled, and are in proper condition for transportation according to the applicable regulations of the Department of Transportation.

CONTAINERS NO. CF.	CONTAINERS NO. DM.	CONTAINERS NO. DF.	TOTAL LBS. OR GAL.	US DOT DESCRIPTION (INCLUDING PROPER SHIPPING NAME, HAZARD CLASS, AND ID.)		
				RQ Waste Perchloroethylene, ORM-A, NA-1897 (EPA,F002) (ERG#74)	PRODUCT NO'S	1202,1210
	1		70	RQ Waste Petroleum Naphtha, Combustible Liquid, UN1255 (EPA,D001,D039) (ERG#27)	PRODUCT NO.	1204,1211
				RQ Hazardous Waste, Liquid, N.O.S. (Trichlorotrifluoroethane), ORM-E, NA9189 (EPA, F002) (ERG#31)	PRODUCT NO.	1209
				Waste, 1,1,1 Trichloroethane, ORM-A, UN2831 (EPA, F002) (ERG#74)	PRODUCT NO.	83358

I certify that my total waste streams are within one of the following categories:

0 to 220 LBS./MONTH Initials

220 LBS. to 2,200 LBS./MONTH Initials

GREATER THAN 2,200 LBS./MONTH Initials

1 Std Cart 20 1 Split Cart 35 1 Jumbo Cart 60 Perc, Freon, 1-1-1 Res 195 Petro Res. 101 Freon Res. Pail 65 Perc Fltr Pwd 135

DESIGNATED FACILITY NAME AND ADDRESS
8755 NW 95TH ST. SAFETY-KLEEN CORP. MEDLEY FL 33178

USA EPA ID NO. FLD984171694
STATE ID NO.
SPENT SOLVENT MEETS ACCEPTANCE CRITERIA YES ☑ NO ☐

SERVICE SALES SECTION

YTD SERVICE	PREVIOUS SERVICE	SERVICE NUMBER	DESCRIPTION	SERVICE CHARGE	UNIT OF MEASURE	QUANTITY RETURNED	LINE TOTAL
5	1	12013	FEE, D/C SERVICE	65.00	EA	1	65.00
		12076	1ST WASTE CONTAINER	N/C	EA	2	.00
4		12016	DRUM CHG, 16-M	6.00	EA		
10	2	12076	CARTRIDGE, SPLT-PETRO	25.00	EA		

GENERATOR USA EPA ID NO. FLD982082901

GENERATOR STATE ID NO.

10-065-5159

CARTRIDGE CAPACITY

SERVICE CHARGES	
TAX	
TOTAL SERVICE CHARGE	65.00

PRODUCT SALES SECTION

YTD SALES	PREVIOUS SALES	PART NUMBER	DESCRIPTION	MSDS GIVEN	PRICE	UNIT OF MEASURE	QUANTITY	INV. CODE	LINE TOTAL
3		351	CARTRIDGE, SPLIT FLTR	☐	53.00	CS			
1		649	CENTER, SAFETY COMM	☐	85.00	EA			
				☐					
				☐					
				☐					
				☐					
				☐					
				☐					
				☐					
				☐					

NAME	TITLE	SIGN
1		
2		

NAME (CHANGE)	TITLE	SIGN
1		
2		

DRUMS ON HAND: 4

PRODUCT TAX	
TOTAL PRODUCT CHARGE	
TOTAL SERVICE CHARGE (FROM ABOVE)	
TOTAL DUE	65.00

PAYMENT RECEIVED SECTION

CASH ☐
CHECK NUMBER

TOTAL RECEIVED

APPLY PAYMENT TO
☐ TODAYS SERVICE/SALE
☐ PREVIOUS BALANCE AS FOLLOWS

INV. # _____ AMOUNT $ _____
INV. # _____ AMOUNT $ _____
INV. # _____ AMOUNT $ _____

CHARGE MY ACCOUNT FOR THIS TRANSACTION UNLESS OTHERWISE INDICATED IN THE PAYMENT RECEIVED SECTION.

INVOICES ARE SUBJECT TO AN INTEREST CHARGE OF THE LESSER OF 1½% PER MONTH (18% PER ANNUM) OR THE MAXIMUM RATE ALLOWED BY LAW ON ANY UNPAID INVOICES THAT ARE NOT PAID WITHIN 30 DAYS.

IN THE EVENT OF DEFAULT, SAFETY-KLEEN SHALL BE ENTITLED TO RECOVER COSTS OF COLLECTION, INCLUDING REASONABLE ATTORNEY'S FEES.

X _____ GENERATOR/DESIGNATED REPRESENTATIVE SIGNATURE

PRINT NAME KAREN SMITH

X _____ DRIVER'S SIGNATURE

IN EVENT OF EMERGENCY CALL
1-800-669-5740 OR 1-708-888-4660 (24 hours)

SEE REVERSE SIDE FOR IMPORTANT INFORMATION.

3-097-52

Please print or type. (Form designed for use on elite (pitch) typewriter.) Form Approved. OMB No. 2050-0039. Expires 9-30-92

UNIFORM HAZARDOUS WASTE MANIFEST

1. Generator's US EPA ID No.: FLD 982082901
Manifest Document No.: 92349
2. Page 1 of 1
Information in the shaded areas is not required by Federal law.

3. Generator's Name and Mailing Address
SERVICE SUPREME
7929 N W MIAMI CT
MIAMI FL 33150

4. Generator's Phone (305) 759-6871

A. State Manifest Document Number
B. State Generator's ID

5. Transporter 1 Company Name: SAFETY-KLEEN CORP.
6. US EPA ID Number: FLD 051060408
C. State Transporter's ID
D. Transporter's Phone 305 884-0123

7. Transporter 2 Company Name
8. US EPA ID Number
E. State Transporter's ID
F. Transporter's Phone

9. Designated Facility Name and Site Address
SAFETY-KLEEN CORP.
8755 NW 95TH ST.
MEDLEY FL 33178
10. US EPA ID Number: 3-097-52 FLD 984171694
G. State Facility's ID
H. Facility's Phone 305 884-0123

	11. US DOT Description (Including Proper Shipping Name, Hazard Class and ID Number)	HM	12. Containers No.	Type	13. Total Quantity	14. Unit Wt/Vol	I. Waste No.
a.	RQ WASTE COMBUSTIBLE LIQUID,N.O.S. (MINERAL SPIRITS) NA1993 PGIII(0001) (ERG#27)	X	1	DM	70	P	0001 0039
b.							
c.							
d.							

J. Additional Descriptions for Materials Listed Above
K. Handling Codes for Wastes Listed Above

15. Special Handling Instructions and Additional Information
9240 44916260 392349 3-097-52-1269 04
IF UNDELIVERABLE,RETURN TO GENERATOR/FOR RECYCLE
EMERGENCY RESP#708-888-4660 24HR SKDOT# A: 569 B: C: D:

16. GENERATOR'S CERTIFICATION: I hereby declare that the contents of this consignment are fully and accurately described above by proper shipping name and are classified, packed, marked, and labeled, and are in all respects in proper condition for transport by highway according to applicable international and national government regulations.

If I am a large quantity generator, I certify that I have a program in place to reduce the volume and toxicity of waste generated to the degree I have determined to be economically practicable and that I have selected the practicable method of treatment, storage, or disposal currently available to me which minimizes the present and future threat to human health and the environment; OR, if I am a small quantity generator, I have made a good faith effort to minimize my waste generation and select the best waste management method that is available to me and that I can afford.

Printed/Typed Name: KAJUM S
Signature: [signature]
Date: Month 10 Day 02 Year 92

17. Transporter 1 Acknowledgement of Receipt of Materials
Printed/Typed Name: Ernesto S. Perez
Signature: [signature]
Date: Month 10 Day 02 Year 92

18. Transporter 2 Acknowledgement of Receipt of Materials
Printed/Typed Name
Signature
Date: Month Day Year

19. Discrepancy Indication Space

20. Facility Owner or Operator: Certification of receipt of hazardous materials covered by this manifest except as noted in Item 19.
Printed/Typed Name: [signature]
Signature: [signature]
Month 10 Day 02 Year 92

GENERATOR / TRANSPORTER / FACILITY

EPA Form 8700-22 (Rev. 9-88) previous editions obsolete

SAFETY-KLEEN CORP.

90290

6

TSDF COPY

Public reporting burden for this collection of information is estimated to average: 37 minutes for generators, 15 minutes for transporters, and 10 minutes for treatment, storage and disposal facilities. This includes time for reviewing instructions, gathering data, and completing and reviewing the form. Send comments regarding the burden estimate, including suggestions for reducing this burden, to: Chief, Information Policy Branch, PM-223, U.S. Environmental Protection Agency, 401 M Street, SW, Washington, DC 20460; and to the Office of Information and Regulatory Affairs, Office of Management and Budget, Washington, DC 20503.

3-097-52

NOTICE OF LAND DISPOSAL RESTRICTION OF WASTE

safety-kleen

TO: SAFETY-KLEEN CORP. (DESIGNATED FACILITY)

EPA ID NO. FLD984171694 (DESIGNATED FACILITY)

8755 NW 95TH ST.

ADDRESS: MEDLEY FL 33178

OPTION A

Under manifest number _____, the generator noted below is shipping to you a waste determined to be restricted under 40 CFR Part 268. In accordance with 40 CFR Part 268.7, the generator hereby provides notice that the waste is restricted from land disposal. A copy of this form must be kept by the generator and facility for five (5) years from the date of waste shipment.

OPTION B
SQG CUSTOMERS ONLY
(PARTS WASHER AND IMMERSION CLEANER 609 AND 699)

In accordance with 40 CFR 268.7, the generator hereby provides notice that the waste is restricted from land disposal. I am a small quantity generator (100-1,000 kg/mo) in accordance with 40 CFR 268.7. This notice applies to all waste shipments under my service contract with Safety-Kleen Corp. It covers today's shipment on manifest No. 423464, or sales/service acknowledgement No. 2613364, and all subsequent shipments. A copy of this notice will be maintained with the service contract(s) or sales/service acknowledgement(s) for five (5) years beyond the termination of the service contract.

PLEASE CHECK THE APPROPRIATE BOXES

✓	WASTE NAME	EPA * WASTE CODE	THE WASTE MAY CONTAIN THE FOLLOWING RESTRICTED CONSTITUENTS	TREATMENT STANDARD (mg/l) OR METHOD (FOR NON-WASTE WATER)
☒	Waste Petroleum Naphtha (105 - Mineral Spirits)	D001,	Ignitable Liquid (High TOC Subcategory)	Incineration (INCIN), fuel substitution (FSUBS) or recovery (RORGS) (40 CFR 268.42) (non-waste water)
			Halogenated Organic Compounds (HOC's) ≥ 1000 mg/l	INCIN (40 CFR 268.42) (non-waste water)
		D018,	Benzene	Not Established
		D039,	Tetrachloroethylene	Not Established
☐	Waste Petroleum Naphtha (140 - Mineral Spirits)	D001,	Ignitable Liquid (High TOC Subcategory)	INCIN. FSUBS, or RORGS (40 CFR 268.42) (non-waste water)
☐	Waste Petroleum Naphtha (sludges from Safety-Kleen Service Center Operations)	D001,	All of the above, plus:	
		D006,	__ Cadmium	1.0 (non-waste water)
		D007,	__ Chromium	5.0 (non-waste water)
		D008,	__ Lead	5.0 (non-waste water)
		D039,	__ Tetrachloroethylene	Not Established
☐	Waste Compound Cleaning Liquid/ Immersion cleaner 609	F004,	Cresylic Acid	0.75 (non-waste water)
		F002,	1, 2-dichlorobenzene	0.125 (non-waste water)
		F002,	Methylene chloride	0.96 (non-waste water)
		D006,	__ Cadmium	1.0 (non-waste water)
		D007,	__ Chromium	5.0 (non-waste water)
		D008,	__ Lead	5.0 (non-waste water)
		D022,	__ Chloroform	Not Established
☐	Waste Compound Cleaning Liquid/ Immersion Cleaner 699		HOC's ≥ 1000 mg/l	INCIN (40 CFR 268.42) (non-waste water)
		D006,	__ Cadmium	1.0 (non-waste water)
		D007,	__ Chromium	5.0 (non-waste water)
		D008,	__ Lead	5.0 (non-waste water)
		D018,	__ Benzene	Not Established
		D021,	__ Chlorobenzene	Not Established
		D027,	__ 1, 4-Dichlorobenzene	Not Established
		D039,	__ Tetrachloroethylene	Not Established
		D040,	__ Trichloroethylene	Not Established
☐	Waste Perchloroethylene	F002,	Tetrachloroethylene	0.05 (non-waste water)
☐	Waste Trichlorotrifluoroethane	F002,	Trichlorotrifluoroethane	0.96 (non-waste water)
☐	Waste 1,1,1 Trichloroethane	F002,	1, 1, 1 Trichloroethane	0.41 (non-waste water)
☐	Waste Petroleum Naphtha (Dry Cleaning)	D001,	Ignitable Liquid (High TOC Subcategory)	INCIN. FSUBS, or RORGS (40 CFR 268.42) (non-waste water)
		D039,	Tetrachloroethylene	Not Established
☐	Waste Paint Related Material	F003,	Acetone	0.59 (non-waste water)
		F005,	Methyl Ethyl Ketone	0.75 (non-waste water)
		F003,	Methyl Isobutyl Ketone	0.33 (non-waste water)
		F005,	Toluene	0.33 (non-waste water)
		F003,	Xylene	0.15 (non-waste water)
		F003,	Methanol	0.75 (non-waste water)
		D001,	Ignitable Liquid (High TOC Subcategory)	INCIN. FSUBS, or RORGS (40 CFR 268.42) (non-waste water)
		D006,	Cadmium	1.0 (non-waste water)
		D007,	Chromium	5.0 (non-waste water)
		D008,	Lead (TOC Subcategory)	5.0 (non-waste water)
☐	Waste Antifreeze	D008,	Lead	5.0 (non-waste water)
		D039,	Tetrachloroethylene	Not Established

The constituent composition is based on knowledge of the waste (via Material Safety Data Sheets for the chemical(s) used, and the process which created the waste).

*These treatment standards do not preclude reclamation prior to final disposition.

3-097-52-1259 04 392349

Generator Company: SERVICE SUPREME

EPA ID NO.: FLD982082901

MANF DOC: 92349

Generator's Signature X _____

Date: 10-02-92

Printed Name and Title of Generator: RAMON S MGR

Safety-Kleen Corp. manages the above waste through its recycling and fuels programs in accordance with all applicable elements of the land disposal restrictions.

PART NO. 1328 (8/92)

THIS FORM BECAME EFFECTIVE 11/9/92

NOTICE OF LAND DISPOSAL RESTRICTION OF WASTE

TO: SAFETY-KLEEN CORP. (DESIGNATED FACILITY)

EPA ID NO. FLD 984171694 (DESIGNATED FACILITY)

ADDRESS: 8755 Northwest 95th Street Medley, FL 33178

Under manifest number _____, the generator noted below is shipping to you a waste determined to be restricted under 40 CFR Part 268. In accordance with 40 CFR Part 268.7, the generator hereby provides notice that the waste is restricted from land disposal. A copy of this form must be kept by the generator and facility for five (5) years from the date of waste shipment.

In accordance with 40 CFR 268.7, the generator hereby provides notice that the waste is restricted from land disposal. I am a small quantity generator (100-1,000 kg/mo) in accordance with 40 CFR 268.7. This notice applies to all waste shipments under my service contract with Safety-Kleen Corp. It covers today's shipment on manifest No. _____, or sales/service acknowledgement No. _____, and all subsequent shipments. A copy of this notice will be maintained with the service contract(s) or sales/service acknowledgement(s) for five (5) years beyond the termination of the service contract.

PLEASE CHECK THE APPROPRIATE BOXES

✓	WASTE NAME	EPA * WASTE CODE	THE WASTE MAY CONTAIN THE FOLLOWING RESTRICTED CONSTITUENTS	TREATMENT STANDARD (mg/l) OR METHOD (FOR NON WASTE WATER)
☐	Waste Petroleum Naphtha (105 - Mineral Spirits)	D001,	Ignitable Liquid (High TOC Subcategory)	Incineration (INCIN), fuel substitution (FSUBS) or recovery (RORGS) (40 CFR 268.42) (non-waste water)
			Halogenated Organic Compounds (HOC's) ≥ 1000 mg/l	INCIN (40 CFR 268.42) (non-waste water)
		D018,	Benzene	Not Established
		D039,	Tetrachloroethylene	Not Established
☐	Waste Petroleum Naphtha (140 - Mineral Spirits)	D001,	Ignitable Liquid (High TOC Subcategory)	INCIN, FSUBS, or RORGS (40 CFR 268.42) (non-waste water)
☐	Waste Petroleum Naphtha (sludges from Safety-Kleen Service Center Operations)	D001,	All of the above, plus:	
		D006,	— Cadmium	1.0 (non-waste water)
		D007,	— Chromium	5.0 (non-waste water)
		D008,	— Lead	5.0 (non-waste water)
		D039,	— Tetrachloroethylene	Not Established
☐	Waste Compound Cleaning Liquid/ Immersion cleaner 609	F004,	Cresylic Acid	3.2 X 0.75 (non-waste water)
		F002,	1, 2-dichlorobenzene	6.2 X 0.125 (non-waste water)
		F002,	Methylene chloride	33.0 X 0.96 (non-waste water)
		D006,	— Cadmium	1.0 (non-waste water)
		D007,	— Chromium	5.0 (non-waste water)
		D008,	— Lead	5.0 (non-waste water)
		D022,	— Chloroform	Not Established
☐	Waste Compound Cleaning Liquid/ Immersion Cleaner 699		HOC's ≥ 1000 mg/l	INCIN (40 CFR 268.42) (non-waste water)
		D006,	— Cadmium	1.0 (non-waste water)
		D007,	— Chromium	5.0 (non-waste water)
		D008,	— Lead	5.0 (non-waste water)
		D018,	— Benzene	Not Established
		D021,	— Chlorobenzene	Not Established
		D027,	— 1, 4-Dichlorobenzene	Not Established
		D039,	— Tetrachloroethylene	Not Established
		D040,	— Trichloroethylene	Not Established
☐	Waste Perchloroethylene	F002,	Tetrachloroethylene	5.6 X 0.05 (non-waste water)
☐	Waste Trichlorotrifluoroethane	F002,	Trichlorotrifluoroethane	X X X 0.057 (non-waste water)
☐	Waste 1,1,1 Trichloroethane	F002,	1, 1, 1 Trichloroethane	28.0 X 0.054 (non-waste water)
☐	Waste Petroleum Naphtha (Dry Cleaning)	D001,	Ignitable Liquid (High TOC Subcategory)	5.6 X 0.40 (non-waste water)
		D039,	Tetrachloroethylene	INCIN, FSUBS, or RORGS (40 CFR 268.42) (non-waste water)
				Not Established
☐	Waste Paint Related Material	F003,	Acetone	160.0 X 0.59 (non-waste water)
		F005,	Methyl Ethyl Ketone	36.0 X 0.75 (non-waste water)
		F003,	Methyl Isobutyl Ketone	33.0 X 0.33 (non-waste water)
		F005,	Toluene	28.0 X 0.33 (non-waste water)
		F003,	Xylene	28.0 X 0.15 (non-waste water)
		F003,	Methanol	0.75 (non-waste water)
		D001,	Ignitable Liquid (High TOC Subcategory)	INCIN, FSUBS, or RORGS (40 CFR 268.42) (non-waste water)
		D006,	Cadmium	1.0 (non-waste water)
		D007,	Chromium	5.0 (non-waste water)
		D008,	Lead (TOC Subcategory)	5.0 (non-waste water)
☐	Waste Antifreeze	D008,	Lead	5.0 (non-waste water)
		D039,	Tetrachloroethylene	Not Established

The constituent composition is based on knowledge of the waste (via Material Safety Data Sheets for the chemical(s) used, and the process which created the waste).

*These treatment standards do not preclude reclamation prior to final disposition.

Generator Company: _____ EPA ID NO.: _____

Generator's Signature X Date: _____

Printed Name and Title of Generator: _____

Safety-Kleen Corp. manages the above waste through its recycling and fuels programs in accordance with all applicable elements of the land disposal restrictions.

PART NO. 1328 (8/92)

Safety-Kleen®

777 Big Timber Road
Elgin, Illinois 60123

DUNS NO. 05106-0408
FED. ID NO. 39-6090019

MACHINE PLACEMENT FORM

P 66976

GENERATOR/LOCATION

NAME

DELIVERY ADDRESS

INFORMATION/ATTENTION LINE

CITY & STATE

ZIP — TAX CODE

USA EPA ID NO. STATE ID NO.

BILL TO (IF DIFFERENT FROM LOCATION)

NAME

DELIVERY ADDRESS

INFORMATION/ATTENTION LINE

CITY & STATE

ZIP — TAX CODE

MANIFEST NUMBER

MACHINE PLACEMENT

DATE PLACED	MACHINE SERIAL NO.	BRANCH	TYPE OF OUTLET	MSDS GIVEN
	—	— —		☐

I hereby acknowledge placement of the machine(s) described herein and having read the directions for use on the reverse side. I further acknowledge reading and do accept the terms and conditions of this machine placement and solvent reclamation agreement, more specifically described on the reverse side.

X _____
CUSTOMER'S SIGNATURE

Safety-Kleen agrees to furnish the above service on its equipment, and customer agrees that all servicing, repair and maintenance of the equipment shall be performed by Safety-Kleen only. All equipment and solvent shall remain the property of Safety-Kleen, and shall be returned to Safety-Kleen upon termination of service. Customer agrees to pay for replacement of equipment due to loss or damage.

Customer agrees to indemnify Safety-Kleen against any loss or claim arising from any personal injury or property damage, however caused, resulting from the placement or use of the machine on the customer's premises. Safety-Kleen is not responsible for any violation, loss or claim arising from noncompliance with pollution control laws caused by release of solvent to the environment from the unit and resulting from improper customer handling including, but not limited to spills into adjacent waterways, sewer lines or ground water, however caused. However, Safety-Kleen accepts responsibility for any spill caused by its agents in connection with the installation or servicing of the machine by Safety-Kleen.

MACHINE CONFIRMATION

DATE OF CONFIRMATION	SALES REP. NO.	SALES SPECIALIST	DATE OF FIRST SCHEDULED SERVICE CALL	BLITZ CODE	P/W TAX %	C.O.M.S. TAX %	PROD. TAX %	CHAIN	SVC P/S	PROD P/S

SERVICE INTERVAL (WEEKS)	CUSTOMER'S P.O. NUMBER ☐ BLANKET ☐ TEMPORARY	SALES TAX EXEMPTION NO.	PLACEMENT CODE	GENERATOR/CUSTOMER TELEPHONE NUMBER AREA CODE — —	SPECIAL HANDLING	CREDIT CODE
			☐ 1 NEW APPLICATION ☐ 2 REPLACE DEFECTIVE MACHINE ☐ 3 REPLACE COMPETITIVE MACHINE ☐ 4 REPLACE HOME MADE VAT ☐ 5 ADDITIONAL MACHINE			

SERVICE CHARGE	TAX	TOTAL	REFUSED SERVICE - EXPLAIN

HAZARDOUS WASTE INFORMATION

CONTAINERS					"This is to certify that the below-named materials are properly classified, described, packaged, marked and labeled, and are in proper condition for transportation according to the applicable regulations of the Department of Transportation."	I certify that my total waste streams are within one of the following categories:
PAILS NO. DM	SSPW TANKS DF	16 GAL NO. DM	30 GAL NO. DM	TOTAL LBS. OR GAL	US DOT DESCRIPTION (INCLUDING PROPER SHIPPING NAME, HAZARD CLASS, AND ID.)	0 to 220 LBS./MONTH _____ Initials
					Waste Petroleum Naphtha, Combustible Liquid, UN1255 (EPA, D001, D018, D039) (ERG #27)	
					RQ Waste Compound, Cleaning, Liquid Corrosive Material, NA1760 (EPA, F002, F004, D006, D007, D008, D022) (ERG #60) PRODUCT NO. 609	220 LBS. to 2,200 LBS./MONTH _____ Initials
					RQ Waste Compound, Cleaning, Liquid Corrosive Material, NA1760 (EPA D006, D007, D008, D018, D021, D027, D039, D040) (ERG #60) PRODUCT NO. 699	GREATER THAN 2,200 LBS./MONTH _____ Initials

Total Quantity = Number of Drums x Ave. Wt/Drum of: Pails _____ SSPW TANKS, _____ 16 Gal, _____ 30 Gal

SPENT SOLVENT MEETS ACCEPTANCE CRITERIA YES ☐ NO ☐

DESIGNATED FACILITY NAME AND ADDRESS: **SAFETY-KLEEN CORP.**

USA EPA ID NO.

STATE ID NO.

PRODUCT SALES SECTION

PRODUCT NUMBER	DESCRIPTION	MSDS GIVEN	DEALER PRICE	UNIT OF MEASURE	QUANTITY DELIVERED	SALES AMOUNT	TAX	LINE TOTAL
		☐						
		☐						
		☐						
		☐						
		☐						

PAYMENT RECEIVED SECTION

CASH ☐

CHECK NUMBER

TOTAL RECEIVED

APPLY PAYMENT TO:
☐ TODAYS SERVICE/SALE
☐ PREVIOUS BALANCE AS FOLLOWS

INV. # _____ AMOUNT $ _____

INV. # _____ AMOUNT $ _____

INV. # _____ AMOUNT $ _____

TOTAL PRODUCT AMOUNTS				
TOTAL MACHINE SERVICE AMOUNT (INCLUDING TAX)				
TOTAL DUE				

CHARGE MY ACCOUNT FOR THIS TRANSACTION UNLESS OTHERWISE INDICATED IN THE PAYMENT RECEIVED SECTION. ALSO I HAVE NOTED THE PRESENCE OF MACHINE AND SOLVENT INFORMATION ON THE REVERSE SIDE.

INVOICES ARE SUBJECT TO AN INTEREST CHARGE OF THE LESSER OF 1½% PER MONTH (18% PER ANNUM) OR THE MAXIMUM RATE ALLOWED BY LAW ON ANY UNPAID INVOICES THAT ARE NOT PAID WITHIN 30 DAYS.

IN THE EVENT OF DEFAULT, SAFETY-KLEEN SHALL BE ENTITLED TO RECOVER COSTS OF COLLECTION INCLUDING REASONABLE ATTORNEY'S FEES.

IN EVENT OF EMERGENCY CALL
1-800-669-5740 or 1-708-888-4660 (24 hours)

PLEASE SEE REVERSE SIDE FOR IMPORTANT INFORMATION

X _____ PRINT NAME _____
GENERATOR/DESIGNATED REPRESENTATIVE SIGNATURE

ELGIN (COMPLETE)

PART NO. 1323 (REV. 1/92)

safety-kleen ®

777 Big Timber Road
Elgin, Illinois 60123

DUNS NO. 05106-0408
FED. ID NO. 39-6090019

COMS SERVICE CONTRACT

CUSTOMER HAS OWN MACHINE

P35151

GENERATOR/LOCATION

NAME

DELIVERY ADDRESS

INFORMATION/ATTENTION LINE

CITY & STATE

ZIP — TAX CODE

USA EPA ID NO. STATE ID NO.

BILL TO (IF DIFFERENT FROM LOCATION)

NAME

DELIVERY ADDRESS

INFORMATION/ATTENTION LINE

CITY & STATE

ZIP — TAX CODE

MANIFEST NUMBER

DATE PLACED	MACHINE SERIAL NO.	BRANCH	TYPE OF OUTLET	MSDS GIVEN	MAKE AND MODEL OF EQUIPMENT
	O–	– –		☐	

Safety-Kleen agrees to furnish clean solvent service and solvent removal service on cleaning equipment owned by customer at the above location. Safety-Kleen is not responsible for repair or maintenance of such equipment. Solvent servicing and removal shall be performed by Safety-Kleen only.

Customer agrees to indemnify Safety-Kleen against any loss or claim arising from any personal injury or property damage, however caused, resulting from the placement or use of the machine on the customer's premises. Safety-Kleen is not responsible for any violation, loss or claim arising from non-compliance with pollution control laws caused by release of solvent to the environment from the unit and resulting from improper customer handling including, but not limited to spills into adjacent waterways, sewer lines or ground water, however caused. However, Safety-Kleen accepts responsibility for any spill solely caused by its agents in connection with the installation or servicing of the machine by Safety-Kleen.

DATE OF CONFIRMATION	SALES REP. NO.	SALES SPECIALIST	DATE OF FIRST SCHEDULED SERVICE CALL	BLITZ CODE	P/W TAX %	C.O.M.S. TAX %	PROD. TAX %	CHAIN	SVC P/S	PROD P/S

SERVICE INTERVAL (WEEKS)	CUSTOMER'S P.O. NUMBER ☐ BLANKET ☐ TEMPORARY	SALES TAX EXEMPTION NO.	GENERATOR/CUSTOMER TELEPHONE NUMBER AREA CODE / –	SPECIAL HANDLING	CREDIT CODE

SERVICE CHARGE	TAX	TOTAL

I ACKNOWLEDGE THAT I HAVE NO OBLIGATION TO PURCHASE SERVICE ON SAID EQUIPMENT FROM ANY THIRD PARTY, AND I ACCEPT THE FOREGOING TERMS AND ACKNOWLEDGE FIRST SERVICE. PRICES ARE SUBJECT TO CHANGE. X

GENERATOR/CUSTOMER SIGNATURE REQUIRED.

HAZARDOUS WASTE INFORMATION

CONTAINERS: PAILS NO. DM	SSPW TANKS DF	16 GAL. NO. DM	30 GAL. NO. DM	TOTAL LBS. OR GAL.	"This is to certify that the below-named materials are properly classified, described, packaged, marked and labeled, and are in proper condition for transportation according to the applicable regulations of the Department of Transportation." US DOT DESCRIPTION (INCLUDING PROPER SHIPPING NAME, HAZARD CLASS, AND ID.)	
					RQ Waste Petroleum Naphtha, Combustible Liquid, UN1255 (EPA, D001, D018, D039) (ERG, #27)	
					RQ Waste Compound, Cleaning, Liquid Corrosive Material, NA1760 (EPA, F002, F004, D006, D007, D008, D022) (ERG #60)	PRODUCT NO. 609
					RQ Waste Compound, Cleaning, Liquid Corrosive Material, NA1760 (EPA, D006, D007, D008, D018, D021, D027, D039, D040) (ERG #60)	PRODUCT NO. 699

I certify that my total waste streams are within one of the following categories:

0 to 220 LBS./MONTH _____ Initials

220 LBS. to 2,200 LBS./MONTH _____ Initials

GREATER THAN 2,200 LBS./MONTH _____ Initials

Total Quantity = Number of Drums x Ave. Wt/Drum of: Pails _____ SSPW TANKS, _____ #, 16 Gal _____ #, 30 Gal

SPENT SOLVENT MEETS ACCEPTANCE CRITERIA YES ☐ NO ☐

DESIGNATED FACILITY NAME AND ADDRESS: **SAFETY-KLEEN CORP.**

USA EPA ID No.

STATE ID No.

PRODUCT SALES SECTION

PRODUCT NUMBER	DESCRIPTION	MSDS GIVEN	DEALER PRICE	UNIT OF MEASURE	QUANTITY DELIVERED	SALES AMOUNT	TAX	LINE TOTAL
		☐						
		☐						
		☐						
		☐						
		☐						
TOTAL PRODUCT AMOUNTS								

PAYMENT RECEIVED SECTION

CASH ☐

CHECK NUMBER

TOTAL RECEIVED

APPLY PAYMENT TO:

☐ TODAYS SERVICE/SALE

☐ PREVIOUS BALANCE AS FOLLOWS

INV. # _____ AMOUNT $ _____

INV. # _____ AMOUNT $ _____

INV. # _____ AMOUNT $ _____

TOTAL MACHINE SERVICE AMOUNT (INCLUDING TAX)

TOTAL DUE

CHARGE MY ACCOUNT FOR THIS TRANSACTION UNLESS OTHERWISE INDICATED IN THE PAYMENT RECEIVED SECTION. I HEREBY ACKNOWLEDGE READING AND DO ACCEPT THE TERMS AND CONDITIONS OF THIS SOLVENT SALES, SERVICE AND RECLAMATION AGREEMENT, MORE SPECIFICALLY DESCRIBED ON THE REVERSE SIDE.

INVOICES ARE SUBJECT TO AN INTEREST CHARGE OF THE LESSER OF 1½% PER MONTH (18% PER ANNUM) OR THE MAXIMUM RATE ALLOWED BY LAW ON ANY UNPAID INVOICES THAT ARE NOT PAID WITHIN 30 DAYS.

IN THE EVENT OF DEFAULT, SAFETY-KLEEN SHALL BE ENTITLED TO RECOVER COSTS OF COLLECTION INCLUDING REASONABLE ATTORNEY'S FEES.

X PRINT NAME

GENERATOR/DESIGNATED REPRESENTATIVE SIGNATURE

IN EVENT OF EMERGENCY CALL
1-800-669-5740 or 1-708-888-4660 (24 hours)

PLEASE SEE REVERSE SIDE FOR IMPORTANT INFORMATION

ELGIN

PART NO. 1601 (300-08-72) (REV. 1/92)

Sent VIA Certified Mail
P 383 - 205-873

safety-kleen

RECEIVED
OCT 2 0 1992
DEPT. OF ENVIRONMENTAL REG.
WEST PALM BEACH

October 19, 1992

Mr. Tim Gray
Hazardous Waste Section
Florida Dept. Of Environmental Regulation
Southeast District
1900 S. Congress Ave., Suite A
West Palm Beach, FL 33406

Re: 1 To 2 Gallons Spill Last September 30, 1992
Safety-Kleen Corp., Medley
FLD984171694

Dear Mr. Tim Gray:

The following information is being submitted for an incident at the referenced facility pursuant to 40 CFR 246.56 (j).

Facility Operator: Safety-Kleen Corp.
777 Big Timber Rd.
Elgin, IL 60123

Facility Location: Safety-Kleen Corp.
8755 NW 95th Street
Medley, FL. 33178

EPA I.D. Number: FLD984171694

1. Report Date: October 8, 1992

2. Person Making Report: Juan Formoso

3. Date and Time of Incident: 09-30-92, 2:10PM

4. Description of Incident: One split 30 gallon drum inside our containment drum storage area leaked. Waste tetrachloroethylene dripped on the floor which is a coated concrete area.

5. Extent of Personnel Injuries: None

6. Extent of Property Damage: None

7. Description and Estimated Quantity of Any Materials Released: Approximately 1 To 2 gallons of waste tetrachloroethylene leaked from a split 30 gallon drum.

777 BIG TIMBER ROAD ELGIN, ILLINOIS 60123 PHONE 708/697-8460 FAX 708/697-4295

8. Human Health and Environmental Impact Assessment: None

9. Remedial Action Taken: Approximately 1 To 2 gallons were recovered. Absorbent rags were drummed and then shipped as a hazardous waste to our recycle center in Lexington, S.C.

10. Estimated Quantity of Clean-Up Residue for Treatment of Disposal: 1 To 2 gallons of clean-up rags were accumulated in a split 30 gallon drum.

This letter also serves as notification that the spill has been cleaned up, and that all emergency equipment is again ready for use. Please contact me at (305) 884-0123 if you have any questions.

Sincerely,

Juan M. Formoso

Juan Formoso
Branch Facility Manager

cc: Zachary Chasen, Derm
State of Florida Division of Emergency Management

Sent VIA Certified Mail
P 073-205-958

RECEIVED
OCT 20 1992
DEPT. OF ENVIRONMENTAL REG.
WEST PALM BEACH

October 19, 1992

Mr. Tim Gray
Hazardous Waste Section
Florida Dept. Of Environmental Regulation
Southeast District
1900 S. Congress Ave., Suite A
West Palm Beach, FL 33406

Re: 2 Gallons Spill Last October 1, 1992
Safety-Kleen Corp., Miami
FLD984171694

Dear Mr. Tim Gray:

The following information is being submitted for an incident at the referenced facility pursuant to 40 CFR 246.56 (j).

Facility Operator: Safety-Kleen Corp.
777 Big Timber Rd.
Elgin, IL 60123

Facility Location: Safety-Kleen Corp.
8755 NW 95th Street
Medley, FL. 33178

EPA I.D. Number: FLD984171694

1. Report Date: October 8, 1992

2. Person Making Report: Juan Formoso

3. Date and Time of Incident: 10-01-92, 7:00AM

4. Description of Incident: One 30 gallon drum inside a truck leaked. The truck was parked inside our fill & return containment area. Clean mineral spirits dripped to the floor of containment area which is a coated concrete area.

5. Extent of Personnel Injuries: None

6. Extent of Property Damage: None

7. Description and Estimated Quantity of Any Materials Released: Approximately 2 gallons of clean mineral spirits leaked from a 30 gallon drum.

777 BIG TIMBER ROAD ELGIN, ILLINOIS 60123 PHONE 708/697-8460 FAX 708/697-4295

8. Human Health and Environmental Impact Assessment: None

9. Remedial Action Taken: Approximately 2 gallons were recovered. Absorbent rags were drummed and then shipped as a hazardous waste to our recycle center in Lexington, S.C.

10. Estimated Quantity of Clean-Up Residue for Treatment of Disposal: 2 gallons of clean-up rags were accumulated in a 16 gallon drum.

This letter also serves as notification that the spill has been cleaned up, and that all emergency equipment is again ready for use. Please contact me at (305) 884-0123 if you have any questions.

Sincerely,

Juan M. Formoso

Juan Formoso
Branch Facility Manager

cc: Zachary Chasen, Derm

Florida Department of Environmental Regulation

Twin Towers Office Bldg. ● 2600 Blair Stone Road ● Tallahassee, Florida 32399-2400

Lawton Chiles, Governor

Carol M. Browner, Secretary

October 12, 1992

RECEIVED

OCT 19 1992

DEPT. OF ENVIRONMENTAL REG.
WEST PALM BEACH

Mr. Victor L. San Agustin, P.E.
Regional Environmental Manager
Safety Kleen
129 South Kentucky Avenue, Suite 701
Lakeland, Florida 33801

Warning Notice 92-20
RE: Safety Kleen, All sites, Florida

Dear Mr. San Agustin:

I have received and reviewed your liability certificates of insurance. I request that you resubmit the certificates on state forms (enclosed).

Please resubmit these forms within fourteen days receipt of this letter. Failure to do so by this date may result in the initiation of formal administrative enforcement proceedings through the issuance of a Notice of Violation and the assessment of penalties. If the Department issues a Notice of Violation and you are named as a party, you will be informed of your rights to contest any determination made by the Department in the Notice of Violation.

If you have questions concerning this matter, I may be reached at 904/488-0300.

Sincerely,

Lorraine G. Clark

Lorraine G. Clark
Environmental Specialist
Hazardous Waste Regulation

LGC/mh

Enclosure

cc: Jeff Pallas, EPA, Atlanta
Gary Santti, DER, Tampa
Knox McGee, DER, West Palm Beach
Bob Snyder, DER, Orlando
Bill Kellenberger, DER, Pensacola
Doug Outlaw, DER, Tallahassee
Camille Plautz, DER, Tallahassee

Recycled Paper
Printed with Soy Based Inks

FLA. DEPT. of ENVIRONMENTAL REGULATION

EMERGENCY RESPONSE INCIDENT REPORT

[ ]entered [ ]dup. [ ]insig. [ ]update

File#

NOTIFICATION

INCIDENT DATE: 10/1/92 TIME: 1100 [X]hrs | CALL REC'D: 10/8/92 11:05 hrs)

REPORTED BY: Juan Formoso | REC'D BY (DER): Paul Wrenbeck

AFFILIATION: Branch Facility Mgr | PHONE #s: 305/884-0123

DER ASST. REQ'D: [ ]on-scene [ ]phone only [X]none [ ]other

TYPE: [ ]abandoned drum [X]spill [ ]dumping [ ]fire [ ]complaint [ ]SARA

LOCATION

LOCATION: 8755 NW 95th St. | CITY: Medley

DER DISTRICT: [ ]NW [ ]NE [ ]SW [ ]C [ ]S [X]SE | COUNTY: Dade

MODE: [ ]highway [X]facility [ ]rail [ ]waterway [ ]coastal
[ ]residential [ ]pipeline [ ]other:

MEDIA AFFECTED: [ ]air [ ]soil [ ]g.w. [ ]wells nearby [ ]beach
[ ]surface water( ) [X]other: IN Containment

RESPONSIBLE PARTY: Safety Kleen Corporation | PHONE: Same

ADDRESS: Same

CONTACT PERSON/TITLE: Same

MATERIAL

MATERIAL	UN/NA#	AMOUNT
2 gallons mineral spirits (Raw material)		

CATEGORY: (check one, most-specific category for each material above)

[X]solvent [ ]corrosive [ ]unknown [ ]fuel
[ ]paint [ ]oxidizer [ ]sewage [ ]oil
[ ]flammable (misc.) [ ]gas [ ]BHW [ ]crude oil
[ ]pesticide [ ]explosive [ ]radioactive [ ]petrol. (misc.)
[ ]poison (misc.) [ ]PCB [ ]wastewater
[ ]other:

RESPONSE

INCIDENT DESCRIPTION: Discovered 2 gallon spill from leaky drum - ~~overfill~~ repacked into new container.

DER CONTRACTOR: DER WORK# (reimbursable? [ ]yes [ ]no)

ACTIONS: discharged w/in containment - NO discharge to bare ground.

DER RESPONDER: N/A Date(s) Hours: field: office:

COMMENTS: ([ ]add'l. info. attached)

AGENCIES NOTIFIED: [ ]SWP [ ]TERS [ ]NRC
[ ]USCG [ ]EPA [ ]DOT [ ]GFC
[X]Local Program: Dade [ ]local EOC [X]other: Tim Gray

copies to: Emergency Response/Tallahassee Other
Local program:

(3/26/92)

FLA. DEPT. of ENVIRONMENTAL REGULATION

EMERGENCY RESPONSE INCIDENT REPORT

[ ]entered [ ]dup. [ ]insig. [ ]update

File#

NOTIFICATION

INCIDENT DATE: 9/30/92 TIME: 1200 hrs | CALL REC'D: 10/8/92 (11:05 hrs)

REPORTED BY: Juan Fornoso | REC'D BY (DER): Paul Wierbicki

AFFILIATION: Branch Facility Mgr | PHONE #s: 305/884-0123

DER ASST. REQ'D: [ ]on-scene [ ]phone only [X]none [ ]other

TYPE: [ ]abandoned drum [X]spill [ ]dumping [ ]fire [ ]complaint [ ]SARA

LOCATION

LOCATION: 8755 NW 95th Street | CITY: Medley

DER DISTRICT: [ ]NW [ ]NE [ ]SW [ ]C [ ]S [X]SE | COUNTY: Dade

MODE: [ ]highway [X]facility [ ]rail [ ]waterway [ ]coastal [ ]residential [ ]pipeline [ ]other:

MEDIA AFFECTED: [ ]air [ ]soil [ ]g.w. [ ]wells nearby [ ]beach [ ]surface water( ) [X]other: In Containment

RESPONSIBLE PARTY: Safety Kleen Corporation | PHONE: Same

ADDRESS: Same

CONTACT PERSON/TITLE: Same

MATERIAL

MATERIAL	UN/NA#	AMOUNT
Waste Perchloroethylene		2 g.

CATEGORY: (check one, most-specific category for each material above)

[X]solvent [ ]corrosive [ ]unknown [ ]fuel
[ ]paint [ ]oxidizer [ ]sewage [ ]oil
[ ]flammable (misc.) [ ]gas [ ]BHW [ ]crude oil
[ ]pesticide [ ]explosive [ ]radioactive [ ]petrol. (misc.)
[ ]poison (misc.) [ ]PCB [ ]wastewater
[ ]other:

RESPONSE

INCIDENT DESCRIPTION:
Leaky container w/in containment area.

DER CONTRACTOR: DER WORK# (reimbursable? [ ]yes [ ]no)

ACTIONS:
Drum repacked - no discharge to ground.

DER RESPONDER: N/A Date(s) Hours: field: office:

COMMENTS: ([ ]add'l. info. attached)

AGENCIES NOTIFIED:
[ ]USCG [ ]SWP [ ]TERS [ ]NRC
[X]Local Program: Dade [ ]EPA [ ]DOT [ ]GFC
[ ]local EOC [X]other: Tim Gray

(9/26/92)

copies to: Emergency Response/Tallahassee
Local program:_____

Other_____

STATE OF FLORIDA
DEPARTMENT OF ENVIRONMENTAL REGULATION

ENFORCEMENT MEETING DOCUMENTATION

Attendees: (See attached list)

Location: SEFD Date: 1/14/92 Time: 9:30AM

Subject: PERMIT MODIFICATIONS - FRS WASTE

Meeting requested by: SAFETY-KLEEN CORP.

Meeting Objectives: TO DISCUSS PERMIT MODIFICATIONS INVOLVING FRS WASTES AT THE MIAMI AND BOYNTON FACILITIES ALONG THE MIAMI/MEDLEY CHANGE OVER.

****

Notes: PERMIT MODIFICATIONS ARE REQUIRED FOR BOTH BOYNTON BEACH AND MIAMI FACILITIES INCORPORATING THE HANDLING OF FRS WASTES. CONSENT ORDERS COMPLIMENTING THE PERMITS WILL BE NEEDED TO ALLOW FOR FRS HANDLING IN THE INTERIM.

1) BOYNTON BEACH - SOME CONCERNS/DEFICIENCIES HAVE BEEN NOTED WITH THE SUBMITTAL. C.O. WOULD ADDRESS 264 STORAGE REQUIREMENTS AND WOULD ALLOW FRS HANDLING DURING PERMIT APPROVAL.

Agreements/Conclusions Reached:

2) MIAMI - AT THIS POINT, PERMIT WOULD BE DENIED BECAUSE OF REFERENCE TO STORAGE ON TRUCKS, RATHER THAN CONTAINER STORAGE AREA.

****

MIAMI - MEDLEY TRANSITION - S-K PRESENTED AN OUTLINE OF TIME FRAMES AND DATES ASSOCIATED WITH THE CLOSING AND STARTUP OF MIAMI AND MEDLEY (ATTACHED COPY)

Follow-up Actions/Dates:

DER TO SEND LETTERS REGARDING THE PERMIT MODIFICATIONS AT BOYNTON AND MIAMI.

DER TO DRAFT MODIFIED C.O.'S FOR BOTH FACILITIES

****

Prepared by: Tim Gray
(Sign)

MEETING ATTENDANCE

DATE: 1/14/92

COMPANIES: SAFETY-KLEEN CORP

AGENCIES: FDER

NAME	REPRESENTING	TELEPHONE NO.
TIMOTHY GRAY	FDER/HAZ WASTE/COMPL. ENF.	407/433-2650
Victor L. San Agustin	Safety-Kleen	(813) 682-8094
Cynthia Norton	ERM-South/Safety-Kleen	813-622-8727
V. Kamath	FDER/Waste Programs	407/433-2650
Robert Kuklesk	DER/Hazardous Waste	(407)433-2650
SAADI MOTAMEDI	DER/ " "	" " "
KUCK MCKEE	-- --	--

MIAMI TO MEDLEY TRANSITION
Planned Sequence of Action Items and Time Deadlines

a. Jan. 15, 1992

Dade County and the City of Medley are expected to issue building permits by this date. We cannot initiate physical construction until these are issued.

b. Jan. 18, 1992

This is the 180th day prior to the July 15 expiration date. Remediation Section submits closure permit application.

c. Feb. 1, 1992

Victor is to submit a Major Permit Modification request on the Medley Part B construction permit by this date. Purpose of the request is to accomplish the listed items below.

i. Allow Medley to operate under the construction permit. A current permit condition allows operation only after issuance of the operating permit, which is expected in very late 1992 or early 1993.

   We prefer to handle this particular request separately, similar to our recent request to extend Medley's construction permit.

ii. Include construction of a 20,000 gal waste antifreeze tank.

iii. Include TCLP wastes.

iv. Include FRS wastes as a permitted waste stream..

v. Other minor changes. Removing references to container colors, including new dumpster/barrel washers.

An expeditious review and processing of this major modification is requested.

d. Jan 15 to April 15, 1992

Branch Construction builds the hazardous waste modules in the facility and completes construction of all facility features listed in items i. to v. below.

i. All hazardous waste management areas; i.e., tank farm, return fill shelter, drum storage areas, high level alarms, and all other safety equipment proposed in the Part B. The side of the warehouse which houses the waste drums should be completed prior to the P.E. inspection.

ii. All features described in the Contingency Plan; i.e., emergency/spill response equipment in all hazardous waste management areas, fire extinguishers, emergency eyewash, etc.

iii. All stormwater control features; i.e., drainage systems, stormwater holding ponds, etc.

iv. All security features; i.e., fences, gates, hazardous waste signs and all other signs specified in the permit.

v. Any other features in the facility which the P.E. deems will ensure protection of S-K personnel and public health and welfare.

Consultant P.E. performs post-installation waste tank system integrity assessment inspection and completes report by this date. Assessment will be conducted before Certificate of Occupancy is issued.

Consultant P.E. performs site inspection. P.E. certifies completion of construction and checks to ensure everything on site is consistent with the Part B permit. Victor submits consultant's certifications to SE-FDER.

Submittal includes request for FDER inspection. Submittal also requests approval to start placing wastes in the drum and tank storage areas.

All of the above should be already complete prior to the P.E.'s site visit.

e. April 15 to June 15, 1992

Branch Construction completes construction of the remainder of the facility and then obtains Certificate of Occupancy.

SE-FDER performs inspection. Assuming no inconsistencies, SE-FDER issues letter allowing us to start placing wastes in the HW management units in Medley.

f. June 15 to July 15, 1992

Jorge Carvajal is notified of the letter in d. above and starts placing wastes in Medley. Jorge initiates transfer of waste operations from Miami to Medley.

Having to truck wastes to Boynton Beach is not expected if the above timelines are strictly met. If we cannot place wastes in Medley by July 15, S-K needs to transfer wastes (truck to truck transfer) somewhere. The receiving truck would then ship the wastes to Boynton Beach branch.

g. July 15, 1992

Last day of operation in Miami. There must be no picked-up hazardous wastes entering or left inside Miami's property beyond this date unless FDER changes its position.

h. July 19, 1992

Victor submits operating permit application for Medley. Medley construction permit expires December 1, 1992. Operating permit application must be submitted by above date as per permit condition.

Florida Department of Environmental Regulation

Southeast District • 1900 S. Congress Ave., Suite A • West Palm Beach, Florida 33406

Lawton Chiles, Governor

Telephone: 407/433-2650
Fax: 407/433-2666

Carol M. Browner, Secretary

OCT 3 1991

Safety-Kleen Corporation
777 Big Timber Road
Elgin, IL 60123
Attn: Ms. Ellen Jurczak
Regional Environmental Engineer

Re: Expiration Date of Miami Facility Hazardous Waste Operating Permit (Permit Number HO 13-122454). Submittal of Medley Facility Hazardous Waste Operating Permit Application and Miami Facility Closure Permit Application

Dear Ms. Jurczak:

A review of the Hazardous Waste Facility Operating Permit (Permit Number HO 13-122454), issued for the Saftey-Kleen facility located at 7875 N.W. 54th Street, Dade County, Florida has been completed. The review has indicated that the permit expiration date is July 15, 1992. The Department cannot accept a Fire Mashall certification in lieu of compliance with the fifty-foot rule in 40 CFR 264.176. Therefore, the Department cannot renew or extend the current operating permit if the facility is not in compliance with 40 CFR 264.176.

July 15, 1992 marks the last date on which the hazardous waste management facility will be permitted to receive any hazardous waste. The date which the facility "expects to begin closure" must be no later than 30 days thereafter (August 14, 1992) as per 40 CFR 264.112(d)(2). In accordance with specific condition number (11) eleven, of the above referenced permit, the facility must apply for a closure permit at least 180 days prior to beginning closure. Therefore, the closure application submittal date is, at the latest, February 17, 1992.

The Department recognizes that the Safety-Kleen Corporation must construct and begin operations at the Medley facility to receive wastes no longer be permitted at the Miami location following July 15, 1992. Submittal of the Medley facility operating permit application, even though construction may not have been completed or begun, is encouraged.

Recycled Paper

Should you have any questions concerning this correspondence, please contact me at 407/433-2650.

Sincerely,

J. Knox McKee, Jr.
Hazardous Waste Permitting

JKM:gml/980

cc: Satish Kastury, DER/Tallahassee
James Scarbrough/EPA Region IV, Atlanta
DERM
Tim Gray, DER/WPB
File, Report Coordinator

Florida Department of Environmental Regulation

Southeast District ● 1900 S. Congress Ave., Suite A ● West Palm Beach, Florida 33406 ● 407-964-9668

Bob Martinez, Governor | Dale Twachtmann, Secretary | John Shearer, Assistant Secretary
Scott Benyon, Deputy Assistant Secretary

CERTIFIED MAIL
RETURN RECEIPT REQUESTED

MAR 2 6 1990

WARNING NOTICE
#WN90-0018-HW13SED
HW - Dade County

Mr. Bob Omiecinski
Environmental Permit Writer
Safety-Kleen Corporation
777 Big Timber Road
Elgin, IL 60123

RE: Safety-Kleen Corporation/Medley
Construction Permit Application #HC 13-175466
Dade County
First Notice of Deficiencies
Class II Hazardous Waste Violations

Dear Mr. Omiecinski:

Your application for a hazardous waste permit has been reviewed and found to be incomplete. The required information and amendments necessary to complete your application are listed in the attached Notice of Deficiencies.

When a permit application is incomplete, all processing of the application is suspended. You are hereby advised to provide us with the requested additional information pursuant to Florida Administrative Code (F.A.C.) Rule 17-730.220 and Chapter 403.0876 Florida Statutes (F.S.)

The deficiencies noted in the enclosed Notice of Deficiencies constitute a violation of Department Rules. Failure to correct the deficiencies within thirty (30) days could subject you to a formal enforcement action including monetary penalties. If you cannot submit this information within thirty (30) days, you must provide a schedule with dates when this information will be submitted. If a complete response to each item is not submitted within the time frame given above, the Department will issue a Notice of Violation, begin the formal process to deny the permit pursuant to Section 120.60, F.S., or take other appropriate actions.

You are encouraged to contact this office to discuss the deficiencies noted by the application review. This exchange of ideas will assist you in developing a complete and adequate response. If you would like to arrange a meeting or if you have any questions, please contact Knox McKee at (407) 964-9668.

Sincerely,

J. Scott Benyon
Deputy Assistant Secretary

JSB:km:rh/12

cc: James Scarbrough/EPA Region IV, Florida RCRA Activities, Atlanta
Satish Kastury, DER/Tallahassee (w/attachment)
Hazardous Waste Enforcement, DER/WPB

First Notice Of Deficiencies
Safety-Kleen Corporation/Medley
(I.D. Number Applied For)
Construction Permit Application HC 13-175466

Resubmittal Format: Resubmittal of information requested in this NOD must be in the form of revised texts, figures, tables, etc. and/or additional appendices. This will allow for the old pages to be removed and the new pages to be added. All revised submittals must include the revision number and date.

A response memo from the facility, listing DER's NOD items followed by the facility's response should be submitted along with the replacement pages.

GENERAL COMMENTS

17-730.900(2) Part I.A. General Information

1. 20. Please submit EPA/DER I.D. Number, upon completion of pending issuance.

17-730.900(2) Part I.B. Site Information

2. 3. Provide photographs of the proposed facility site showing the location of future storage areas.

3. 4.2 Submit a legible map indicating the facility's location within the 100-year floodplain area.

17-730.900(2) Part II.A. General

4. 1A. The maps provided in the application do not adequately depict the area of 100-year floodplain (illegible), orientation of the topographic map, contours sufficient to show surface water flow, drainage or flood control and runoff control system. Submit a map or series of maps (legible quality) which clearly detail the inadequately depicted site characteristics.

5. 1A. Provide a site specific surface water management plan.

6. 1B. Submit a wind rose of legible quality which includes the indication of legend and date.

7. 3. The proposed Safety-Kleen Service Center is shown (Exhibit I.B.5-1) to be located in Zone AH (EL.6). Zone AH is a special flood hazard area (SFHA) subject to inundation by the 100-year shallow flooding (usually areas of ponding) where average depths are between (1) one and (3) three feet. Identify the 100-year flood level and any other special flooding factors (e.g. wave action) which must be considered in designing, constructing, operating or maintaining the facility to withstand washout from a 100-year flood. Additionally, provide the following information:

a) Engineering analysis to indicate the various hydrodynamic and hydrostatic forces expected to result at the site as a consequence of a 100-year flood.

b) Structural or other engineering studies showing the design of operational units (i.e., tanks, incinerators) and flood protection devices (i.e., floodwalls, dikes) at the facility and how these will prevent washout.

c) If applicable, and in lieu of (a) and (b) above, a detailed description of procedures to be followed to remove hazardous waste to safety before the facility is flooded, including:

(1) Timing of such movement relative to flood levels, including the estimated time to move the waste to show that such movement can be completed before floodwaters reach the facility;

(2) A description of the locations(s) to which the waste will be moved and a demonstration that those facilities will be eligible to receive hazardous waste in accordance with the regulations under 40 CFR Parts 264 and 265;

(3) The planned procedures, equipment, and personnel to be used and the means to ensure that such resources will be available in time for use; and

(4) The potential for accidental discharges of the waste during movement.

8. 4.b The contingency plan which has been submitted states, "If the emergency coordinator determines that the facility has had a release...that could threaten human health or the environment outside the facility..." (I.E. 2-6), should be modified to state, "inside and outside the facility".

9. 4.b The contingency plan, "Spill Control Procedures", (I.E. 2-14) must establish the provision for submitting reports of emergency incidents within (15) fifteen days of occurrence. A statement clarifying this timeframe requirement must be incorporated in the language.

10. 4.b The contingency plan, "Procedures For Recordkeeping", (I.D. 6), must be expanded to include annual reports, land band notification/certification forms, waste minimization statement and transporter liability certification.

<u>17-730.900(2) Part II.B. Containers</u>

11. 1.b.1 Provide manufacturer's specifications which support that the containment area coating (Sikagard 62 or Concresive 1305) material is compatible with all solvents with which it may contact. (Exhibit I.E. 3-10).

12. 1.b.1 Provide manufacturer's specifications which support that the sump liner (SK Part No. 5280) is compatible with all solvents with which it may contact. (Exhibit I.E. 3-10).

13. 6. The conceptual closure information provided appears adequate. When an actual Closure Permit Application is submitted for review the Department will require a more detailed closure plan.

17-730.900(2) Part II.C. Tanks

14. 2. Specify the nominal capacity (U.S. Gallons) and maximum capacity (U.S. Gallons) of the aboveground storage tanks.

15. 2. Exhibit I.E. 3-9 provides (2) two storage tank configurations (vertical installation and horizontal installation). Specify which configuration is to be used at the facility.

16. 4. Exhibit I.E. 3-7 does not detail which couplings will be used for drain line connection, vent line connection, fill line connection and high level alarm transmitter. Provide a drawing which supplies this information.

17. 6. Specify if the proposed aboveground storage tanks are to be newly constructed or used. If used tanks are proposed, submit the ages of all used tanks.

18. 7. Following the timely cleanup of an unsuspected release into the facility's containment area the facility must ensure that residual contaminants are not transported out of the containment system via the sump (Exhibit I.E. 3-6, section A-1) and discharged to a retention pond. It is recommended that the facility investigate installing an oil/water separator following the 6" gate valve and preceding discharge to the retention pond.

19. 7. Supply information on the actual tank configuration (vertical installation or horizontal installation) to be used and make all necessary adjustments in the tank displacement volume calculations. Provide the reference source and any calculations used to derive the rainfall allowance amount (Exhibit I.E. 3-6).

20. 11. Daily inspection of the aboveground storage tank system (I.E. 4-1) must include a visual inspection of tank bottoms (40 CFR 264.193(c)(3)). Modify and submit daily inspection log (I.E. 4-1) to include a visual inspection of the aboveground storage tank bottoms.

21. 12. The conceptual closure information provided would appear adequate with the inclusion of the information requested in comments #24-32. When an actual closure permit application is submitted for review the Department will require a more detailed closure plan.

22. 12. In the tank closure the final rinsate must be sampled and analyzed for mineral spirits, volatile organic compounds, lead and cadmium. (Pg. I.F. 1-3, 1.e. and Pg. I.F. 1-4, 2f).

23. 12. Surface soil samples (from beneath each dumpster) must be collected and analyzed for mineral spirits, volatile organic compounds and E.P. Toxic Metals (Pb, Cd, Cr)(Pg. I.F. 1-4, 2h).

24. 12. Contaminated soil must either be removed and properly disposed, the contamination eliminated using an alternate method (e.g. soil venting) or closed as a landfill (40 CRF 264.197(b)). (Pg. I.F. 1-4, 2i).

25. 12. Provisions must be made to prevent backfilling any excavated area with contaminated soil. It must be determined that excavated soil is clean prior to using it as backfill material. (Pg. I.F. 1-5, 3e (1)).

26. 12. Provisions must be made to contain and properly dispose all rinsate from tank interiors. (Pg. I.F. 1-5, 3a (3)).

27. 12. The final rinsate must be analyzed for mineral spirits, volatile organic compounds and metals associated with the waste stored in the tanks. (Pg. I.F. 1-5, 3c (8)).

28. 12. Provisions must be made to disconnect and decontaminate all appurtenant piping and pumping equipment, analyzing the final rinsate for mineral spirits, volatile organic compounds and metals associated with the waste stored in the tanks. (Pg. I.F. 1-5, 3d (1&2)).

29. 12. Testing for metals should be added to the soil sample analysis (Pg. I.F. 1-5, 3.d.(4)).

30. 12. Include language which states that if it is not possible to eliminate contamination the tank farm area must be closed as a landfill (40 CFR 264.197(b)). (Pg. I.F. 1-5, 3d (5)).

Florida Department of Environmental Regulation

Twin Towers Office Bldg. • 2600 Blair Stone Road • Tallahassee, Florida 32399-2400

Bob Martinez, Governor | Dale Twachtmann, Secretary | John Shearer, Assistant Secretary

02-20-90

JOE HARTLINE, REG EN
SAFETY KLEEN CORP 3-097-02
777 BIG TIMBER RD
ELGIN IL 60123

The Hazardous Waste Management Program has reviewed your application for a hazardous waste DER/EPA I.D. Number.

Based on the information received you have been issued the following identification number for the facility at E OF NW 89TH AVE & NW 96TH ST , MEDLEY

Facility ID # FLD984171694
Your facility status is the following:

Generator.
Treater.
Storer.
Disposer.
Transporter.

Florida Administrative code rule 17-30 requires all generators of hazardous waste and all hazardous waste treatment, storage, or disposal facilities to file an annual report of their hazardous waste activities with DER. You must comply with this rule concerning the filing of an annual report by March 1 for the preceding calendar year. Hazardous waste generators and facilities that are not subject to the annual report requirement but maintain an EPA/DER identification number are required to verify their status annually using the annual report form. The forms will be sent to the contact person. Businesses that generate less than 1000 kilograms of hazardous waste per month (small quantity generators) are not subject to these reporting or verification requirements.

If any of the information on the Hazardous Waste Activity form changes, please notify us in writing at the letterhead address. For further assistance, please call 904/488-0300.

Sincerely,

Michael X. Redig

Michael X. Redig
Environmental Supervisor II
Hazardous Waste Management Section

cc: Ann Cole - EPA/Region IV
DER/West Palm Beach