UNIVERSITY OF FLORIDA
COGENERATION PLANT
STEAM BOILER NO. 7

AIR CONSTRUCTION PERMIT AND
TITLE V AIR OPERATION PERMIT
REVISION APPLICATIONS

Prepared for:

DUKE ENERGY FLORIDA, LLC
St. Petersburg, Florida

Prepared By:

TD Air Quality Consulting, LLC
11211 NW 9th Place
Gainesville, FL 32606

April 2018

INTRODUCTION

The Duke Energy Florida, LLC (DEF) University of Florida Cogeneration Plant (UF Cogen) is a nominal 48-megawatt (MW) cogeneration facility located in Gainesville, Alachua County, Florida. UF Cogen includes a GE LM6000-PC–ESPRINT combustion turbine (CT – EU 007) and a heat recovery steam generator (HRSG – EU 005). Steam produced by the HRSG, which is equipped with supplemental duct burners, is used to meet University of Florida heating and hot water requirements. Both the CT and HRSG DBs are fired exclusively with natural gas.

The UF Cogen facility also includes two steam boilers (Boiler Nos. 5 and 6 – EUs 003 and 008) and a 544 horsepower emergency generator (EG – EU 009). The primary fuel for the two steam boilers is natural gas with ultra-low sulfur diesel (ULSD) fuel oil used as a secondary fuel source. The steam boilers serve as backup sources of steam when the CT/HRSG unit is not in service, and also provide steam to supplement the CT/HRSG unit during periods of high steam demand.

UF Cogen operations are currently authorized by Florida Department of Environmental Protection (FDEP) Title V Air Operation Permit No. 0010001-019-AV issued with an effective date of May 12, 2016 and an expiration date of December 31, 2019. UF Cogen is classified as a major Prevention of Significant Deterioration (PSD) and Title V source, and a minor (i.e., area) source of hazardous air pollutants (HAPs).

DEF plans to modify the UF Cogen facility by installing a third backup steam boiler identified as Boiler No. 7. As is the case with the two existing backup steam boilers, Boiler No. 7 will be owned by the University of Florida and operated by DEF. The additional backup steam boiler has a maximum heat input rating of 82.6 million British thermal units per hour (MMBtu/hr) and will be fired exclusively with natural gas. Excluding operation for readiness testing and routine maintenance, Boiler No. 7 will only operate when at least one of the two existing backup steam boilers is out of service; i.e., Boiler No. 7 will serve as a replacement for either Boiler No. 5 or No. 6. As a contingency in the event either

Boiler No. 5 or No. 6 becomes non-operational for an extended period of time, DEF requests that Boiler No. 7 be authorized to operate up to 8,760 hours per year. However, Boiler No. 7 is expected to operate infrequently since during normal operations it will serve as a backup to the existing backup boilers.

Boiler No. 7 will have potential emissions that are below the PSD significant emission rates specified in Rule 62-210.200(256), F.A.C. Accordingly, Boiler No. 7 qualifies as a minor modification to an existing major source and therefore is not subject to major New Source Review (NSR); i.e., PSD permitting. An analysis of PSD permitting applicability is provided in Attachment G.

Boiler No. 7 will be subject to New Source Performance Standard Subpart Dc - Standards of Performance for Small Industrial-Commercial-Institutional Steam Generating Units. However, NSPS Subpart Dc does not contain any emission standards that are applicable to natural gas-fired boilers. The only NSPS Subpart Dc requirements that apply to Boiler No. 7 pertain to fuel consumption recordkeeping. Since Boiler No. 7 will be fired exclusively with natural gas, it will not be subject to National Emissions Standards for Hazardous Air Pollutants (NESHAPS) Subpart JJJJJJ (National Emission Standards for Hazardous Air Pollutants for Industrial, Commercial, and Institutional Boilers Area Sources) since natural gas-fired boilers are exempt from this subpart per 40 CFR §63.11195(e). Boiler No. 7 will be subject to the requirements of Rule 62-296.406, F.A.C. - Fossil Fuel Steam Generators with Less Than 250 Million Btu Per Hour Heat Input, New and Existing Emission Units. This rule includes visible emission standards and requires Best Available Control Technology (BACT) for particulate matter and sulfur dioxide. Boiler No. 7 will comply with Rule 62-296.406, F.A.C. by exclusively firing natural gas. Further discussion of the federal and Department rules applicable to Boiler No. 7 are provided in Attachment D.

This submittal consisting of FDEP's Application for Air Permit – Long Form (DEP Form No. 62-210.900(1) effective June 2017) and all required supplemental facility and emissions unit information, constitutes DEF's applications for an air construction permit and Title V

permit revision. In accordance with the provisions of Rule 62-213.405, F.A.C., DEF requests concurrent processing of these two air permit applications.

In addition to the completed Application for Air Permit – Long Form, the following Boiler No. 7 supplemental information is provided for the Department's review:

- Attachment A—Facility Plot Plan
- Attachment B— Process Flow Diagram
- Attachment C—Description of Proposed Construction
- Attachment D—Rule Applicability Analysis
- Attachment E—Fuel Specifications
- Attachment F—Emission Rate Calculations
- Attachment G—PSD Applicability Analysis
- Attachment H—Boiler Specifications

APPLICATION FOR AIR PERMIT
LONG FORM

Department of
Environmental Protection
Division of Air Resource Management

APPLICATION FOR AIR PERMIT - LONG FORM
DEP FORM No. 62-210.900(1) and INSTRUCTIONS

I. APPLICATION INFORMATION

Air Construction Permit – Use this form to apply for an air construction permit:

- For any required purpose at a facility operating under a federally enforceable state air operation permit (FESOP) or Title V air operation permit;
- For a proposed project subject to prevention of significant deterioration (PSD) review, nonattainment new source review, or maximum achievable control technology (MACT);
- To assume a restriction on the potential emissions of one or more pollutants to escape a requirement such as PSD review, nonattainment new source review, MACT, or Title V; or
- To establish, revise, or renew a plantwide applicability limit (PAL).

Air Operation Permit – Use this form to apply for:

- An initial federally enforceable state air operation permit (FESOP); or
- An initial, revised, or renewal Title V air operation permit.

Identification of Facility

1. **Facility Owner/Company Name**: Duke Energy Florida, LLC	
2. **Site Name**: University of Florida Cogeneration Plant	
3. **Facility Identification Number**: 0010001 ☐ Unknown	
4. **Facility Location** Street Address or Other Locator: 1928 Mowry Road, Building 82 City: Gainesville County: Alachua Zip Code: 32611-2078	
5. **Relocatable Facility?** ☐Yes ☒ No	6. **Existing Title V Permitted Facility?** ☒Yes ☐No

Application Contact

1. **Application Contact** Name: Chris Bradley Title: Environmental Specialist
2. **Application Contact Mailing Address** Organization/Firm: Duke Energy Florida, LLC Street Address: 299 First Avenue North, FL-903 City: St. Petersburg State: FL Zip Code: 33701-3308
3. **Application Contact Telephone Numbers** Telephone: (727) 820 - 5962 ext. Fax: (727) 820 - 5229
4. **Application Contact E-mail Address**: chris.bradley@duke-energy.com

Application Processing Information (DEP Use Only)

1. Date of Receipt of Application:	3. PSD Number (if applicable):
2. Project Number(s):	4. Siting Number (if applicable):

I. APPLICATION INFORMATION

Purpose of Application

This application for air permit is being submitted to obtain: (Check one)

Air Construction Permit

☐ Air construction permit.

☐ Air construction permit to establish, revise, or renew a plantwide applicability limit (PAL).

☐ Air construction permit to establish, revise, or renew a plantwide applicability limit (PAL), and separate air construction permit to authorize construction or modification of one or more emissions units covered by the PAL.

Air Operation Permit

☐ Initial Title V air operation permit.

☐ Title V air operation permit revision.

☐ Title V air operation permit renewal.

☐ Initial federally enforceable state air operation permit (FESOP) where professional engineer (PE) certification is required.

☐ Initial federally enforceable state air operation permit (FESOP) where professional engineer (PE) certification is not required.

Air Construction Permit and Revised/Renewal Title V Air Operation Permit (Concurrent Processing)

☒ Air construction permit and Title V permit revision, incorporating the proposed project.

☐ Air construction permit and Title V permit renewal, incorporating the proposed project.

Note: By checking one of the above two boxes, you, the applicant, are requesting concurrent processing pursuant to Rule 62-213.405, F.A.C. In such case, you must also check the following box:

☒ I hereby request that the department waive the processing time requirements of the air construction permit to accommodate the processing time frames of the Title V air operation permit.

Application Comment

Duke Energy Florida, LLC (DEF) plans to install an additional backup steam boiler (Boiler No. 7) at its University of Florida Cogeneration Plant (UF Cogen). DEF has been issued a Title V Air Operation Permit (TV Permit) from the FDEP authorizing operation of the UF Cogen facility. TV Permit Number 0010001-019-AV was issued with an effective date of May 12, 2016 and an expiration date of December 31, 2019.

This application and supporting documents constitutes DEF's request for concurrent processing of air construction permit and TV permit revision applications in accordance with the requirements of Rule 62-210.300(1)(a), F.A.C. (air construction permits), Rule 62-212.300 (general preconstruction review requirements), and Rule 62-213.405, F.A.C. (concurrent processing of air construction permits and TV permit revisions).

I. APPLICATION INFORMATION

Scope of Application

Emissions Unit ID Number	Description of Emissions Unit	Air Permit Type	Air Permit Processing Fee
010	No. 7 Steam Boiler	N/A	N/A

N/A = not applicable

Application Processing Fee

Check one: ☐Attached - Amount: $_____ ☒ Not Applicable

I. APPLICATION INFORMATION

Owner/Authorized Representative Statement N/A

Complete if applying for an air construction permit or an initial FESOP.

1.	**Owner/Authorized Representative** Name: _____ Title: _____
2.	**Owner/Authorized Representative Mailing Address** Organization/Firm: Street Address: City: State: Zip Code:
3.	**Owner/Authorized Representative Telephone Numbers** Telephone: (___) _____-_____ ext._____ Fax: (____) ____- _____
4.	**Owner/Authorized Representative E-mail Address**:
5.	**Owner/Authorized Representative Statement**: *I, the undersigned, am the owner or authorized representative* of the facility addressed in this air permit application. I hereby certify, based on information and belief formed after reasonable inquiry, that the statements made in this application are true, accurate and complete, and that, to the best of my knowledge, any estimates of emissions reported in this application are based upon reasonable techniques for calculating emissions. The air pollutant emissions units and air pollution control equipment described in this application will be operated and maintained so as to comply with all applicable standards for control of air pollutant emissions found in the statutes of the State of Florida and rules of the Department of Environmental Protection (Department) and revisions thereof. I understand that a permit, if granted by the Department, cannot be transferred without authorization from the Department, and I will promptly notify the Department upon sale or legal transfer of any permitted emissions unit.* Signature_____ Date _____

* Attach letter of authorization if not currently on file.

N/A = not applicable

I. APPLICATION INFORMATION

Application Responsible Official Certification

Complete if applying for an initial, revised, or renewal Title V air operation permit or concurrent processing of an air construction permit and revised or renewal Title V air operation permit. If there are multiple responsible officials, the "application responsible official" need not be the "primary responsible official."

1. **Application Responsible Official**
   Name: Jay Chesser Title: Station Manager

2. **Application Responsible Official Qualification** (Check one or more of the following options, as applicable):
   ☒ For a corporation, the president, secretary, treasurer, or vice-president of the corporation in charge of a principal business function, or any other person who performs similar policy or decision-making functions for the corporation, or a duly authorized representative of such person if the representative is responsible for the overall operation of one or more manufacturing, production, or operating facilities applying for or subject to a permit under Chapter 62-213, F.A.C.
   ☐ For a partnership or sole proprietorship, a general partner or the proprietor, respectively.
   ☐ For a municipality, county, state, federal, or other public agency, either a principal executive officer or ranking elected official.
   ☐ The designated representative at an Acid Rain source or CAIR source.

3. **Application Responsible Official Mailing Address**
   Organization/Firm: Duke Energy Florida, LLC
   Street Address: 1928 Mowry Road, Building 82
   City: Gainesville State: FL Zip Code: 32611-2078

4. **Application Contact Telephone Numbers**
   Telephone: (352) 337 - 6904 ext. Fax: (352) 337 - 6920

5. **Application Responsible Official E-mail Address:** jay.chesser@duke-energy.com

. **Application Responsible Official Certification:**
   I, the undersigned, am a responsible official of the Title V source addressed in this air permit application. I hereby certify, based on information and belief formed after reasonable inquiry, that the statements made in this application are true, accurate and complete and that, to the best of my knowledge, any estimates of emissions reported in this application are based upon reasonable techniques for calculating emissions. The air pollutant emissions units and air pollution control equipment described in this application will be operated and maintained so as to comply with all applicable standards for control of air pollutant emissions found in the statutes of the State of Florida and rules of the Department of Environmental Protection and revisions thereof and all other applicable requirements identified in this application to which the Title V source is subject. I understand that a permit, if granted by the department, cannot be transferred without authorization from the department, and I will promptly notify the department upon sale or legal transfer of the facility or any permitted emissions unit. Finally, I certify that the facility and each emissions unit are in compliance with all applicable requirements to which they are subject, except as identified in compliance plan(s) submitted with this application.
   Signature _____ Date 4/2/2018

I. APPLICATION INFORMATION

Professional Engineer Certification

1. **Professional Engineer Name**: Thomas W. Davis
   Florida License Number: 36777

2. **Professional Engineer Mailing Address**
   Organization/Firm: TD Air Quality Consulting, LLC
   Street Address: 11211 NW 9th Place
   City: Gainesville State: FL Zip Code: 32606-5403

3. **Professional Engineer Telephone Numbers**
   Telephone: (352) 262 - 1314 ext. N/A Fax: N/A

4. **Professional Engineer E-mail Address**: tomdair1@gmail.com

5. Professional Engineer Statement:

I, the undersigned, hereby certify, except as particularly noted herein, that:*

To the best of my knowledge, there is reasonable assurance that the air pollutant emissions unit(s) and the air pollution control equipment described in this application for air permit, when properly operated and maintained, will comply with all applicable standards for control of air pollutant emissions found in the Florida Statutes and rules of the Department of Environmental Protection; and

To the best of my knowledge, any emission estimates reported or relied on in this application are true, accurate, and complete and are either based upon reasonable techniques available for calculating emissions or, for emission estimates of hazardous air pollutants not regulated for an emissions unit addressed in this application, based solely upon the materials, information and calculations submitted with this application.

If the purpose of this application is to obtain a Title V air operation permit (check here ☐, if so), I further certify that each emissions unit described in this application for air permit, when properly operated and maintained, will comply with the applicable requirements identified in this application to which the unit is subject, except those emissions units for which a compliance plan and schedule is submitted with this application.

If the purpose of this application is to obtain an air construction permit (check here ☐, if so) or concurrently process and obtain an air construction permit and a Title V air operation permit revision or renewal for one or more proposed new or modified emissions units (check here ☒, if so), I further certify that the engineering features of each such emissions unit described in this application have been designed or examined by me or individuals under my direct supervision and found to be in conformity with sound engineering principles applicable to the control of emissions of the air pollutants characterized in this application.

If the purpose of this application is to obtain an initial air operation permit or operation permit revision or renewal for one or more newly constructed or modified emissions units (check here ☐, if so), I further certify that, with the exception of any changes detailed as part of this application, each such emissions unit has been constructed or modified in substantial accordance with the information given in the corresponding application for air construction permit and with all provisions contained in such permit.

Thomas W. Davis 4/2/2018

Signature Date

(seal)

THOMAS W. DAVIS LICENSE No 36777 STATE OF FLORIDA PROFESSIONAL ENGINEER

* Attach any exception to certification statement.

A. GENERAL FACILITY INFORMATION

Facility Location and Type

1. **Facility UTM Coordinates** Zone: 17 East (km): 369.45 North (km): 3,279.67		2. **Facility Latitude/Longitude** Latitude (DD/MM/SS): N/A Longitude (DD/MM/SS): N/A	
3. **Governmental Facility Code**: 0	4. **Facility Status Code**: A	5. **Facility Primary Major Group SIC Code**: 49	6. **Facility SIC(s)**: 4911
7. **Facility Primary NAICS 2-digit Code**: 22	8. **Facility NAICS(s) 6-digit Code(s)**: 221111		
9. **Facility Comment**:			

Facility Contact

1. **Facility Contact** Name: Elisha Gibson Title: Environmental, Health and Safety Professional II
2. **Facility Contact Mailing Address** Organization/Firm: Duke Energy Florida, LLC Street Address: 1928 Mowry Road, Building 82 City: Gainesville State: FL Zip Code: 32611-2078
3. **Facility Contact Telephone Numbers** Telephone: (352) 422 - 6437 ext. Fax: (352) 337 - 6920
4. **Facility Contact E-mail Address**: Elisha.Gibson@duke-energy.com

Facility Primary Responsible Official **N/A**

Complete if an "application responsible official" is identified in Section I that is not the facility "primary responsible official."

1. **Facility Primary Responsible Official** Name: _____ Title: _____
2. **Facility Primary Responsible Official Mailing Address** Organization/Firm: Street Address: City: _____ State: _____ Zip Code: _____
3. **Facility Primary Responsible Official Telephone Numbers** Telephone: (___) _____-_____ ext._____ Fax: (____) ____- _____
4. **Facility Primary Responsible Official E-mail Address**:

Facility Regulatory Classifications

Check all that would apply *following* completion of all projects and implementation of all other changes proposed in this application for air permit. Refer to instructions to distinguish between a "major source" and a "synthetic minor source."

1. ☐ **Small Business Stationary Source** ☐ Unknown
2. ☐ **Synthetic Non-Title V Source**
3. ☒ **Title V Source**
4. ☒ **Major Source of Air Pollutants, Other than Hazardous Air Pollutants (HAPs)**
5. ☐ **Synthetic Minor Source of Air Pollutants, Other than HAPs**
6. ☐ **Major Source of Hazardous Air Pollutants (HAPs)**
7. ☐ **Synthetic Minor Source of HAPs**
8. ☒ **One or More Emissions Units Subject to NSPS** (40 CFR Part 60)
9. ☐ **One or More Emissions Units Subject to Emission Guidelines** (40 CFR Part 60)
10. ☒ **One or More Emissions Units Subject to NESHAP** (40 CFR Part 61 or Part 63)
11. ☐ **Title V Source Solely by EPA Designation** (40 CFR 70.3(a)(5))
12. **Facility Regulatory Classifications Comment**:

Applicable NSPS & NESHAPS

NSPS Subpart Db:	Duct Burner with HRSG (EU ID 005)
NSPS Subpart Dc:	No. 6 Steam Boiler (EU ID 008)
NSPS Subpart GG:	Combustion Turbine (EU ID 007)
NESHAPS Subpart JJJJJJ:	Nos. 5 and 6 Steam Boilers (EU IDs 003 and 008)*
NESHAPS Subpart ZZZZ:	Emergency Generator (EU ID 009)

* Although NESHAPS Subpart JJJJJJ applies to Boilers Nos. 5 and 6, the units are exempt from the requirements of Subpart JJJJJJ as long as fuel oil firing only occurs during periods of gas curtailment, gas supply interruption, startups, or for periodic testing, maintenance, or operator training on liquid fuel. Periodic testing, maintenance, or operator training on liquid fuel is limited to a combined total of 48 hours during any calendar year. See the Subpart JJJJJJ §63.11237 definition of a "gas-fired boiler" and Conditions A.3.c and A.12 of TV Permit No. 0010001-019-AV.

Potential Greenhouse Gas Emissions (For PSD applications only.) N/A

1. **List the potential emissions, in tons per year, of the following greenhouse gases**:

Greenhouse Gas	**Tons/year**	**2. x GWP =**	**CO2e (Tons/year)**
carbon dioxide		1	
nitrous oxide		298	
methane		25	
sulfur hexafluoride		22,800	
hydrofluorocarbons			
perfluorocarbons			
3. Total carbon dioxide equivalents			

4. Greenhouse Gases Comments:

List of Pollutants Emitted by Facility

1. **Pollutant Emitted**	2. **Pollutant Classification**	3. **Emissions Cap [Y or N]?**
Nitrogen Oxides (NOX)	A	Y
Sulfur Dioxide (SO2)	A	N
Particulate Matter, Filterable (PM)	A	N
PM10, Filterable (PM10)	A	N
Carbon Monoxide (CO)	A	N
Organic Compounds, Volatile (VOC)	A	N

B. EMISSIONS CAPS

Facility-Wide or Multi-Unit Emissions Caps

1. Pollutant Subject to Emissions Cap	2. Facility-Wide Cap [Y or N]? (all units)	3. Emissions Unit ID's Under Cap (if not all units)	4. Hourly Cap (lbs/hr)	5. Annual Cap (tons/yr)	6. Basis for Emissions Cap
NOX	N	003, 005, 007, 008, and 010	N/A	185.3	ESCPSD

7. Facility-Wide or Multi-Unit Emissions Cap Comment:

Annual NOx cap is on a calendar year basis per Condition FW9 of TV Permit Number 0010001-019-AV.

C. FACILITY ADDITIONAL INFORMATION

Additional Requirements for All Applications, Except as Otherwise Stated

1. **Facility Plot Plan**: (Required for all permit applications, except Title V air operation permit revision applications if this information was submitted to the department within the previous five years and would not be altered as a result of the revision being sought) ☒ Attached, Document ID: Attachment A ☐ Previously Submitted, Date:
2. **Process Flow Diagram(s)**: (Required for all permit applications, except Title V air operation permit revision applications if this information was submitted to the department within the previous five years and would not be altered as a result of the revision being sought) **(Boiler No. 7 – no changes to other UF Cogen emission units)** ☒ Attached, Document ID: Attachment B ☐ Previously Submitted, Date:
3. **Precautions to Prevent Emissions of Unconfined Particulate Matter**: (Required for all permit applications, except Title V air operation permit revision applications if this information was submitted to the department within the previous five years and would not be altered as a result of the revision being sought) ☐ Attached, Document ID: ☒ Previously Submitted, Date: 5/16/2014

Additional Requirements for Air Construction Permit Applications

1. **Area Map Showing Facility Location** ☐ Attached, Document ID:_____ ☒ Not Applicable (existing permitted facility)
2. **Description of Proposed Construction, Modification, or Plantwide Applicability Limit (PAL)** ☒ Attached, Document ID: Attachment C
3. **Rule Applicability Analysis** ☒ Attached, Document ID: Attachment D
4. **List of Exempt Emissions Units** ☐ Attached, Document ID:_____ ☒ Not Applicable (no exempt units at facility)
5. **Fugitive Emissions Identification** ☐ Attached, Document ID:_____ ☒ Not Applicable
6. **Air Quality Analysis** (Rule 62-212.400(7), F.A.C.) ☐ Attached, Document ID:_____ ☒ Not Applicable
7. **Source Impact Analysis** (Rule 62-212.400(5), F.A.C.) ☐ Attached, Document ID:_____ ☒ Not Applicable
8. **Air Quality Impact since 1977** (Rule 62-212.400(4)(e), F.A.C.) ☐ Attached, Document ID:_____ ☒ Not Applicable
9. **Additional Impact Analyses** (Rules 62-212.400(8) and 62-212.500(4)(e), F.A.C.) ☐ Attached, Document ID:_____ ☒ Not Applicable
10. **Alternative Analysis Requirement** (Rule 62-212.500(4)(g), F.A.C.) ☐ Attached, Document ID:_____ ☒ Not Applicable

C. FACILITY ADDITIONAL INFORMATION (CONTINUED)

Additional Requirement for FESOP Applications N/A

List of Exempt Emissions Units ☐ Attached, Document ID:_____ ☐ Not Applicable (no exempt units at facility)

Additional Requirements for Title V Air Operation Permit Applications

1. **List of Insignificant Activities** (Required for initial/renewal applications only) ☐ Attached, Document ID: ☒ Not Applicable (revision application)
2. **Identification of Applicable Requirements** (Required for initial/renewal applications, and for revision applications if this information would be changed as a result of the revision being sought. For federal regulations where applicability is dependent on the specific type of facility, provide the level of detail required to determine which specific set of regulations apply.) ☐ Attached, Document ID: ☒ Not Applicable
3. **Compliance Report and Plan** (Required for all initial/revision/renewal applications) ☐ Attached, Document ID:_____ ☒ Not Applicable Note: A compliance plan must be submitted for each emissions unit that is not in compliance with all applicable requirements at the time of application and/or at any time during application processing. The department must be notified of any changes in compliance status during application processing.
4. **List of Equipment/Activities Regulated under Title VI** (If applicable, required for initial/renewal applications only) ☐ Attached, Document ID: ☐ Equipment/Activities Onsite but Not Required to be Individually Listed ☒ Not Applicable
5. **Verification of Risk Management Plan Submission to EPA** (If applicable, required for initial/renewal applications only) ☐ Attached, Document ID:_____ ☒ Not Applicable
6. **Requested Changes to Current Title V Air Operation Permit** ☐ Attached, Document ID: _____ ☒ Not Applicable

C. FACILITY ADDITIONAL INFORMATION (CONTINUED)

Additional Requirements for Facilities Subject to Acid Rain or CAIR Program

1. **Acid Rain Program Forms**:

   Acid Rain Part Application (DEP Form No. 62-210.900(1)(a))

   ☐ Attached, Document ID: ☒ Previously Submitted, Date: 05/16/2014

   ☐ Not Applicable (not an Acid Rain source)

   Phase II NO_X Averaging Plan (DEP Form No. 62-210.900(1)(a)1.)

   ☐ Attached, Document ID:_____ ☐ Previously Submitted, Date:_____

   ☒ Not Applicable

   New Unit Exemption (DEP Form No. 62-210.900(1)(a)2.)

   ☐ Attached, Document ID:_____ ☐ Previously Submitted, Date:_____

   ☒ Not Applicable

2. **CAIR Part** (DEP Form No. 62-210.900(1)(b)):

   ☐ Attached, Document ID:_____ ☐ Previously Submitted, Date:_____

   ☒ Not Applicable (not a CAIR source)

Additional Requirements Comment

A. GENERAL EMISSIONS UNIT INFORMATION

Title V Air Operation Permit Emissions Unit Classification

Regulated or Unregulated Emissions Unit? (Check one, if applying for an initial, revised or renewal Title V air operation permit. Skip this item if applying for an air construction permit or FESOP only.)

☒ The emissions unit addressed in this Emissions Unit Information Section is a regulated emissions unit.

☐ The emissions unit addressed in this Emissions Unit Information Section is an unregulated emissions unit.

Emissions Unit Description and Status

1. **Type of Emissions Unit Addressed in this Section** (Check one)

☒ This Emissions Unit Information Section addresses, as a single emissions unit, a single process or production unit, or activity, which produces one or more air pollutants and which has at least one definable emission point (stack or vent).

☐ This Emissions Unit Information Section addresses, as a single emissions unit, a group of process or production units and activities which has at least one definable emission point (stack or vent) but may also produce fugitive emissions.

☐ This Emissions Unit Information Section addresses, as a single emissions unit, one or more process or production units and activities which produce fugitive emissions only.

2. **Description of Emissions Unit Addressed in this Section**:
No. 7 Steam Boiler

3. **Emissions Unit Identification Number**: 010

4. **Emissions Unit Status Code**: C	5. **Commence Construction Date**: N/A	6. **Initial Startup Date**: N/A	7. **Emissions Unit Major Group SIC Code**: 49

8. **NAICS Code**: 221112

9. **Federal Program Applicability**: (Check all that apply)

☐ Acid Rain Unit

☐ CAIR Unit

10. **Package Unit**
Manufacturer: Indeck Power Equipment Company **Model Number**: OT-60

11. **Generator Nameplate Rating**: N/A

12. **Emissions Unit Comment**:

Backup steam boiler fired exclusively with natural gas.

EMISSIONS UNIT INFORMATION
Section [1] of [1]

Emissions Unit Control Equipment/Method: Control 1 of 2

1. **Control Equipment/Method Description**: Low-NOx burners (LNB)
2. **Control Device or Method Code**: 205

Emissions Unit Control Equipment/Method: Control 2 of 2

1. **Control Equipment/Method Description**: Flue gas recirculation (FGR)
2. **Control Device or Method Code**: 26

Emissions Unit Control Equipment/Method: Control ___ of ____

1. **Control Equipment/Method Description**:
2. **Control Device or Method Code**:

Emissions Unit Control Equipment/Method: Control ___ of ____

1. **Control Equipment/Method Description**:
2. **Control Device or Method Code**:

B. EMISSIONS UNIT CAPACITY INFORMATION
(Optional for unregulated emissions units.)

Emissions Unit Operating Capacity and Schedule

1. **Maximum Process or Throughput Rate**: N/A		
2. **Maximum Production Rate**: N/A		
3. **Maximum Heat Input Rate**: 82.6 x 10^6 Btu/hr (HHV)		
4. **Maximum Incineration Rate**: N/A	lbs/hr	tons/day
5. **Requested Maximum Operating Schedule**		
	hours/day:	days/week:
	weeks/year:	hours/year: 8,760
6. **Operating Capacity/Schedule Comment**:		

Excluding operation for readiness testing and routine maintenance, backup No. 7 steam boiler will only operate when at least one of the two existing backup steam boilers is out of service.

As a contingency in the event either Boiler No. 5 or No. 6 becomes non-operational for an extended period of time, DEF requests that Boiler No. 7 be authorized to operate up to 8,760 hours per year However, Boiler No. 7 is expected to operate infrequently since during normal operations it will serve as a backup to the existing backup boilers.

C. EMISSION POINT (STACK/VENT) INFORMATION
(Optional for unregulated emissions units.)

Emission Point Description and Type

1. **Identification of Point on Plot Plan or Flow Diagram**: B-7		2. **Emission Point Type Code**: 1
3. **Descriptions of Emission Points Comprising this Emissions Unit for VE Tracking**: N/A		
4. **ID Numbers or Descriptions of Emission Units with this Emission Point in Common**: N/A		
5. **Discharge Type Code**: W	6. **Stack Height** (feet): 22	7. **Exit Diameter** (feet): 3.8
8. **Exit Temperature** (°F): 600	9. **Actual Volumetric Flow Rate** (acfm): 31,300	10. **Water Vapor (%)**: N/A
11. **Maximum Dry Standard Flow Rate** (dscfm): N/A		12. **Nonstack Emission Point Height** (feet): N/A
13. **Emission Point UTM Coordinates** Zone: East (km): North (km):		14. **Emission Point Latitude/Longitude** Latitude (DD/MM/SS): Longitude (DD/MM/SS):
15. **Emission Point Comment**: Actual volumetric flow rate (Field 9) estimated using EPA Reference Method 19 "F" factor for natural gas. Fields 13 and 14 are optional.		

D. SEGMENT (PROCESS/FUEL) INFORMATION

Segment Description and Rate: Segment 1 of 1

1. **Segment Description (Process/Fuel Type)**: Natural gas burned in fossil fuel-fired steam boiler SCC: External combustion boilers, industrial, natural gas, boilers less than 100 x 10^6 Btu/hr heat input		
2. **Source Classification Code (SCC)**: 1-02-006-01	3. **SCC Units**: million cubic feet burned	
4. **Maximum Hourly Rate**: 0.081	5. **Maximum Annual Rate**: 709.6	6. **Estimated Annual Activity Factor**: N/A
7. **Maximum % Sulfur**: N/A	8. **Maximum % Ash**: N/A	9. **Million Btu per SCC Unit**: 1,020 (HHV)
10. Segment Comment: Maximum annual rate (Field 5) based on 8,760 hr/yr operation at full load.		

Segment Description and Rate: Segment of

1. **Segment Description (Process/Fuel Type)**:		
2. **Source Classification Code (SCC)**:	3. **SCC Units**:	
4. **Maximum Hourly Rate**:	5. **Maximum Annual Rate**:	6. **Estimated Annual Activity Factor**:
7. **Maximum % Sulfur**:	8. **Maximum % Ash**:	9. **Million Btu per SCC Unit**:
10. Segment Comment:		

EMISSIONS UNIT INFORMATION
Section [1] of [1]

E. EMISSIONS UNIT POLLUTANTS

List of Pollutants Emitted by Emissions Unit

1. Pollutant Emitted	2. Primary Control Device Code	3. Secondary Control Device Code	4. Pollutant Regulatory Code
NOX	N/A	N/A	EL
CO	N/A	N/A	NS
SO2	N/A	N/A	EL
VOC	N/A	N/A	NS
PM	N/A	N/A	EL
PM10-PRI	N/A	N/A	NS
PM2.5-PRI	N/A	N/A	NS
PB	N/A	N/A	NS
SAM	N/A	N/A	NS

F1. EMISSIONS UNIT POLLUTANT DETAIL INFORMATION – POTENTIAL, FUGITIVE, AND ACTUAL EMISSIONS

(Optional for unregulated emissions units.)

Complete a Subsection F1 for each pollutant identified in Subsection E if applying for an air construction permit or concurrent processing of an air construction permit and a revised or renewal Title V operation permit. Complete for each emissions-limited pollutant identified in Subsection E if applying for an air operation permit.

Potential, Estimated Fugitive, and Baseline & Projected Actual Emissions

1. **Pollutant Emitted**: NOX	2. **Total Percent Efficiency of Control**: N/A
3. **Potential Emissions** 8.3 lb/hour 36.4 ton/year	4. **Synthetically-Limited?** ☐ Yes ☒ No
5. **Range of Estimated Fugitive Emissions (as applicable)**: N/A _____ to _____ tons/year	
6. **Emission Factor**: 0.10 lb/10^6 Btu **Reference**: Vendor (Indeck) Data	7. **Emissions Method Code**: 3A
8.a. **Baseline Actual Emissions (if required)**: N/A tons/year	8.b. **Baseline 24-month Period**: N/A From: To:
9.a. **Projected Actual Emissions (if required)**: N/A tons/year	9.b. **Projected Monitoring Period**: N/A ☐ 5 years ☐ 10 years
10. **Calculation of Emissions**: NOx (hourly) = 0.10 lb/10^6 Btu x (82.6 x 10^6 Btu/hr) = 8.3 lb/hr NOx (annual) = 8.3 lb/hr x 8,760 hr/yr x 1 ton/2,000 lb = 36.4 ton/yr	
11. **Potential, Fugitive, and Actual Emissions Comment**:	

F2. EMISSIONS UNIT POLLUTANT DETAIL INFORMATION - ALLOWABLE EMISSIONS

Complete Subsection F2 if the pollutant identified in Subsection F1 is or would be subject to a numerical emissions limitation.

Allowable Emissions Numerical Emissions Limitation 1 of 1

1. **Basis for Numerical Emissions Limitation Code**: ESCPSD	2. **Future Effective Date of Numerical Emissions Limitation**: N/A
3. **Numerical Emissions Limitation and Units**: N/A	4. **Equivalent Allowable Emissions**: N/A lbs/hour 36.4 tons/year
5. **Method of Compliance**: Annual emissions calculated using natural gas consumption and vendor (Indeck Power Equipment Company) emission factor of 0.10 lb/10^6 Btu.	
6. **Allowable Emissions Comment** (Description of Operating Method): Boiler No. 7 annual NOx emissions will be included in the facility NOx cap of 185.3 ton/yr.	

Allowable Emissions Numerical Emissions Limitation ___of ___

1. **Basis for Numerical Emissions Limitation Code**:	2. **Future Effective Date of Numerical Emissions Limitation**:
3. **Numerical Emissions Limitation and Units**:	4. **Equivalent Allowable Emissions**: lbs/hour tons/year
5. **Method of Compliance**:	
6. **Allowable Emissions Comment** (Description of Operating Method):	

Allowable Emissions Numerical Emissions Limitation ___of ___

1. **Basis for Numerical Emissions Limitation Code**:	2. **Future Effective Date of Numerical Emissions Limitation**:
3. **Numerical Emissions Limitation and Units**:	4. **Equivalent Allowable Emissions**: lbs/hour tons/year
5. **Method of Compliance**:	
6. **Allowable Emissions Comment** (Description of Operating Method):	

F1. EMISSIONS UNIT POLLUTANT DETAIL INFORMATION – POTENTIAL, FUGITIVE, AND ACTUAL EMISSIONS

(Optional for unregulated emissions units.)

Complete a Subsection F1 for each pollutant identified in Subsection E if applying for an air construction permit or concurrent processing of an air construction permit and a revised or renewal Title V operation permit. Complete for each emissions-limited pollutant identified in Subsection E if applying for an air operation permit.

Potential, Estimated Fugitive, and Baseline & Projected Actual Emissions

1. **Pollutant Emitted**: CO	2. **Total Percent Efficiency of Control**: N/A
3. **Potential Emissions** 6.1 lb/hour 26.7 ton/year	4. **Synthetically-Limited?** ☐ Yes ☒ No
5. **Range of Estimated Fugitive Emissions (as applicable)**: N/A _____ to _____ tons/year	
6. **Emission Factor**: 0.074 lb/10^6 Btu **Reference**: Vendor (Indeck) Data	7. **Emissions Method Code**: 3A
8.a. **Baseline Actual Emissions (if required)**: N/A tons/year	8.b. **Baseline 24-month Period**: N/A From: To:
9.a. **Projected Actual Emissions (if required)**: N/A tons/year	9.b. **Projected Monitoring Period**: N/A ☐ 5 years ☐ 10 years

10. **Calculation of Emissions**:

CO (hourly) = 0.074 lb/10^6 Btu x (82.6 x 10^6 Btu/hr) = 6.1 lb/hr

CO (annual) = 6.1 lb/hr x 8,760 hr/yr x 1 ton/2,000 lb = 26.7 ton/yr

11. **Potential, Fugitive, and Actual Emissions Comment**:

F2. EMISSIONS UNIT POLLUTANT DETAIL INFORMATION - ALLOWABLE EMISSIONS N/A

Complete Subsection F2 if the pollutant identified in Subsection F1 is or would be subject to a numerical emissions limitation.

Allowable Emissions Numerical Emissions Limitation ___of ___

1. **Basis for Numerical Emissions Limitation Code**:	2. **Future Effective Date of Numerical Emissions Limitation**:
3. **Numerical Emissions Limitation and Units**:	4. **Equivalent Allowable Emissions**: lbs/hour tons/year
5. **Method of Compliance**:	
6. **Allowable Emissions Comment** (Description of Operating Method):	

Allowable Emissions Numerical Emissions Limitation ___of ___

1. **Basis for Numerical Emissions Limitation Code**:	2. **Future Effective Date of Numerical Emissions Limitation**:
3. **Numerical Emissions Limitation and Units**:	4. **Equivalent Allowable Emissions**: lbs/hour tons/year
5. **Method of Compliance**:	
6. **Allowable Emissions Comment** (Description of Operating Method):	

Allowable Emissions Numerical Emissions Limitation ___of ___

1. **Basis for Numerical Emissions Limitation Code**:	2. **Future Effective Date of Numerical Emissions Limitation**:
3. **Numerical Emissions Limitation and Units**:	4. **Equivalent Allowable Emissions**: lbs/hour tons/year
5. **Method of Compliance**:	
6. **Allowable Emissions Comment** (Description of Operating Method):	

F1. EMISSIONS UNIT POLLUTANT DETAIL INFORMATION – POTENTIAL, FUGITIVE, AND ACTUAL EMISSIONS

(Optional for unregulated emissions units.)

Complete a Subsection F1 for each pollutant identified in Subsection E if applying for an air construction permit or concurrent processing of an air construction permit and a revised or renewal Title V operation permit. Complete for each emissions-limited pollutant identified in Subsection E if applying for an air operation permit.

Potential, Estimated Fugitive, and Baseline & Projected Actual Emissions

1. **Pollutant Emitted**: SO2	2. **Total Percent Efficiency of Control**: N/A
3. **Potential Emissions** 0.49 lb/hour 2.2 ton/year	4. **Synthetically-Limited?** ☐ Yes ☒ No
5. **Range of Estimated Fugitive Emissions (as applicable)**: N/A _____ to _____ tons/year	
6. **Emission Factor**: 6.0 lb/10^6 ft^3 natural gas burned **Reference**: AP-42, Table 1.4-2	7. **Emissions Method Code**: 3B
8.a. **Baseline Actual Emissions (if required)**: N/A tons/year	8.b. **Baseline 24-month Period**: N/A From: To:
9.a. **Projected Actual Emissions (if required)**: N/A tons/year	9.b. **Projected Monitoring Period**: N/A ☐ 5 years ☐ 10 years
10. **Calculation of Emissions**: SO_2 (hourly) = 6.0 lb/10^6 ft^3 x (0.081 x 10^6 ft^3/hr) = 0.49 lb/hr SO_2 (annual) = 0.49 lb/hr x 8,760 hr/yr x 1 ton/2,000 lb = 2.2 ton/yr	
11. **Potential, Fugitive, and Actual Emissions Comment**: AP-42 emission factor (Field 6) adjusted for natural gas sulfur content of 2.0 grains S per 100 ft^3.	

F2. EMISSIONS UNIT POLLUTANT DETAIL INFORMATION - ALLOWABLE EMISSIONS

Complete Subsection F2 if the pollutant identified in Subsection F1 is or would be subject to a numerical emissions limitation.

Allowable Emissions Numerical Emissions Limitation 1 of 1

1. **Basis for Numerical Emissions Limitation Code**: RULE	2. **Future Effective Date of Numerical Emissions Limitation**: N/A
3. **Numerical Emissions Limitation and Units**: 2.0 gr S / 100 ft^3 natural gas	4. **Equivalent Allowable Emissions**: N/A lbs/hour N/A tons/year
5. **Method of Compliance**: Use of natural gas containing no more than 2.0 grains S per 100 ft^3.	
6. **Allowable Emissions Comment** (Description of Operating Method): Rule 62-296.406(3), F.A.C. – Best Available Control Technology	

Allowable Emissions Numerical Emissions Limitation ___of ___

1. **Basis for Numerical Emissions Limitation Code**:	2. **Future Effective Date of Numerical Emissions Limitation**:
3. **Numerical Emissions Limitation and Units**:	4. **Equivalent Allowable Emissions**: lbs/hour tons/year
5. **Method of Compliance**:	
6. **Allowable Emissions Comment** (Description of Operating Method):	

Allowable Emissions Numerical Emissions Limitation ___of ___

1. **Basis for Numerical Emissions Limitation Code**:	2. **Future Effective Date of Numerical Emissions Limitation**:
3. **Numerical Emissions Limitation and Units**:	4. **Equivalent Allowable Emissions**: lbs/hour tons/year
5. **Method of Compliance**:	
6. **Allowable Emissions Comment** (Description of Operating Method):	

F1. EMISSIONS UNIT POLLUTANT DETAIL INFORMATION – POTENTIAL, FUGITIVE, AND ACTUAL EMISSIONS

(Optional for unregulated emissions units.)

Complete a Subsection F1 for each pollutant identified in Subsection E if applying for an air construction permit or concurrent processing of an air construction permit and a revised or renewal Title V operation permit. Complete for each emissions-limited pollutant identified in Subsection E if applying for an air operation permit.

Potential, Estimated Fugitive, and Baseline & Projected Actual Emissions

1. **Pollutant Emitted**: VOC	2. **Total Percent Efficiency of Control**: N/A
3. **Potential Emissions** 0.45 lb/hour 2.0 ton/year	4. **Synthetically-Limited?** ☐ Yes ☒ No
5. **Range of Estimated Fugitive Emissions (as applicable)**: N/A _____ to _____ tons/year	
6. **Emission Factor**: 5.5 lb/10^6 ft^3 natural gas burned **Reference**: AP-42, Table 1.4-2	7. **Emissions Method Code**: 3B
8.a. **Baseline Actual Emissions (if required)**: N/A tons/year	8.b. **Baseline 24-month Period**: N/A From: To:
9.a. **Projected Actual Emissions (if required)**: N/A tons/year	9.b. **Projected Monitoring Period**: N/A ☐ 5 years ☐ 10 years
10. **Calculation of Emissions**: VOC (hourly) = 5.5 lb/10^6 ft^3 x (0.081 x 10^6 ft^3/hr) = 0.45 lb/hr VOC (annual) = 0.45 lb/hr x 8,760 hr/yr x 1 ton/2,000 lb = 2.0 ton/yr	
11. **Potential, Fugitive, and Actual Emissions Comment**:	

F2. EMISSIONS UNIT POLLUTANT DETAIL INFORMATION - ALLOWABLE EMISSIONS N/A

Complete Subsection F2 if the pollutant identified in Subsection F1 is or would be subject to a numerical emissions limitation.

Allowable Emissions Numerical Emissions Limitation ___of ___

1. **Basis for Numerical Emissions Limitation Code**:	2. **Future Effective Date of Numerical Emissions Limitation**:
3. **Numerical Emissions Limitation and Units**:	4. **Equivalent Allowable Emissions**: lbs/hour tons/year
5. **Method of Compliance**:	
6. **Allowable Emissions Comment** (Description of Operating Method):	

Allowable Emissions Numerical Emissions Limitation ___of ___

1. **Basis for Numerical Emissions Limitation Code**:	2. **Future Effective Date of Numerical Emissions Limitation**:
3. **Numerical Emissions Limitation and Units**:	4. **Equivalent Allowable Emissions**: lbs/hour tons/year
5. **Method of Compliance**:	
6. **Allowable Emissions Comment** (Description of Operating Method):	

Allowable Emissions Numerical Emissions Limitation ___of ___

1. **Basis for Numerical Emissions Limitation Code**:	2. **Future Effective Date of Numerical Emissions Limitation**:
3. **Numerical Emissions Limitation and Units**:	4. **Equivalent Allowable Emissions**: lbs/hour tons/year
5. **Method of Compliance**:	
6. **Allowable Emissions Comment** (Description of Operating Method):	

F1. EMISSIONS UNIT POLLUTANT DETAIL INFORMATION – POTENTIAL, FUGITIVE, AND ACTUAL EMISSIONS

(Optional for unregulated emissions units.)

Complete a Subsection F1 for each pollutant identified in Subsection E if applying for an air construction permit or concurrent processing of an air construction permit and a revised or renewal Title V operation permit. Complete for each emissions-limited pollutant identified in Subsection E if applying for an air operation permit.

Potential, Estimated Fugitive, and Baseline & Projected Actual Emissions

1. **Pollutant Emitted**: PM (filterable)	2. **Total Percent Efficiency of Control**: N/A
3. **Potential Emissions** 0.15 lb/hour 0.66 ton/year	4. **Synthetically-Limited?** ☐ Yes ☒ No
5. **Range of Estimated Fugitive Emissions (as applicable)**: N/A _____ to _____ tons/year	
6. **Emission Factor**: 1.9 lb/10^6 ft^3 natural gas burned **Reference**: AP-42, Table 1.4-2	7. **Emissions Method Code**: 3B
8.a. **Baseline Actual Emissions (if required)**: N/A tons/year	8.b. **Baseline 24-month Period**: N/A From: To:
9.a. **Projected Actual Emissions (if required)**: N/A tons/year	9.b. **Projected Monitoring Period**: N/A ☐ 5 years ☐ 10 years
10. **Calculation of Emissions**: PM (hourly) = 1.9 lb/10^6 ft^3 x (0.081 x 10^6 ft^3/hr) = 0.15 lb/hr PM (annual) = 0.15 lb/hr x 8,760 hr/yr x 1 ton/2,000 lb = 0.66 ton/yr	
11. **Potential, Fugitive, and Actual Emissions Comment**:	

F2. EMISSIONS UNIT POLLUTANT DETAIL INFORMATION – ALLOWABLE EMISSIONS

Complete Subsection F2 if the pollutant identified in Subsection F1 is or would be subject to a numerical emissions limitation.

Allowable Emissions Numerical Emissions Limitation 1 of 1

1. **Basis for Numerical Emissions Limitation Code**: RULE	2. **Future Effective Date of Numerical Emissions Limitation**: N/A
3. **Numerical Emissions Limitation and Units**: 2.0 gr S / 100 ft^3 natural gas	4. **Equivalent Allowable Emissions**: N/A lbs/hour N/A tons/year
5. **Method of Compliance**: Use of natural gas containing no more than 2.0 grains S per 100 ft^3.	
6. **Allowable Emissions Comment** (Description of Operating Method): Rule 62-296.406(2), F.A.C. – Best Available Control Technology	

Allowable Emissions Numerical Emissions Limitation ___of ___

1. **Basis for Numerical Emissions Limitation Code**:	2. **Future Effective Date of Numerical Emissions Limitation**:
3. **Numerical Emissions Limitation and Units**:	4. **Equivalent Allowable Emissions**: lbs/hour tons/year
5. **Method of Compliance**:	
6. **Allowable Emissions Comment** (Description of Operating Method):	

F1. EMISSIONS UNIT POLLUTANT DETAIL INFORMATION – POTENTIAL, FUGITIVE, AND ACTUAL EMISSIONS

(Optional for unregulated emissions units.)

Complete a Subsection F1 for each pollutant identified in Subsection E if applying for an air construction permit or concurrent processing of an air construction permit and a revised or renewal Title V operation permit. Complete for each emissions-limited pollutant identified in Subsection E if applying for an air operation permit.

Potential, Estimated Fugitive, and Baseline & Projected Actual Emissions

1. **Pollutant Emitted**: PM10-PRI (filterable + condensable)	2. **Total Percent Efficiency of Control**: N/A
3. **Potential Emissions** 0.62 lb/hour 2.7 ton/year	4. **Synthetically-Limited?** ☐ Yes ☒ No
5. **Range of Estimated Fugitive Emissions (as applicable)**: N/A _____ to _____ tons/year	
6. **Emission Factor**: 7.6 lb/10^6 ft^3 natural gas burned **Reference**: AP-42, Table 1.4-2	7. **Emissions Method Code**: 3B
8.a. **Baseline Actual Emissions (if required)**: N/A tons/year	8.b. **Baseline 24-month Period**: N/A From: To:
9.a. **Projected Actual Emissions (if required)**: N/A tons/year	9.b. **Projected Monitoring Period**: N/A ☐ 5 years ☐ 10 years
10. **Calculation of Emissions**: PM10-PRI (hourly) = 7.6 lb/10^6 ft^3 x (0.081 x 10^6 ft^3/hr) = 0.62 lb/hr PM10-PRI (annual) = 0.62 lb/hr x 8,760 hr/yr x 1 ton/2,000 lb = 2.7 ton/yr	
11. **Potential, Fugitive, and Actual Emissions Comment**:	

F2. EMISSIONS UNIT POLLUTANT DETAIL INFORMATION - ALLOWABLE EMISSIONS N/A

Complete Subsection F2 if the pollutant identified in Subsection F1 is or would be subject to a numerical emissions limitation.

Allowable Emissions Numerical Emissions Limitation ___of ___

1. **Basis for Numerical Emissions Limitation Code**:	2. **Future Effective Date of Numerical Emissions Limitation**:
3. **Numerical Emissions Limitation and Units**:	4. **Equivalent Allowable Emissions**: lbs/hour tons/year
5. **Method of Compliance**:	
6. **Allowable Emissions Comment** (Description of Operating Method):	

Allowable Emissions Numerical Emissions Limitation ___of ___

1. **Basis for Numerical Emissions Limitation Code**:	2. **Future Effective Date of Numerical Emissions Limitation**:
3. **Numerical Emissions Limitation and Units**:	4. **Equivalent Allowable Emissions**: lbs/hour tons/year
5. **Method of Compliance**:	
6. **Allowable Emissions Comment** (Description of Operating Method):	

F1. EMISSIONS UNIT POLLUTANT DETAIL INFORMATION – POTENTIAL, FUGITIVE, AND ACTUAL EMISSIONS

(Optional for unregulated emissions units.)

Complete a Subsection F1 for each pollutant identified in Subsection E if applying for an air construction permit or concurrent processing of an air construction permit and a revised or renewal Title V operation permit. Complete for each emissions-limited pollutant identified in Subsection E if applying for an air operation permit.

Potential, Estimated Fugitive, and Baseline & Projected Actual Emissions

1. **Pollutant Emitted**: PM2.5-PRI (filterable + condensable)	2. **Total Percent Efficiency of Control**: N/A
3. **Potential Emissions** 0.62 lb/hour 2.7 ton/year	4. **Synthetically-Limited?** ☐ Yes ☒ No
5. **Range of Estimated Fugitive Emissions (as applicable)**: N/A _____ to _____ tons/year	
6. **Emission Factor**: 7.6 lb/10^6 ft^3 natural gas burned **Reference**: AP-42, Table 1.4-2	7. **Emissions Method Code**: 3B
8.a. **Baseline Actual Emissions (if required)**: N/A tons/year	8.b. **Baseline 24-month Period**: N/A From: To:
9.a. **Projected Actual Emissions (if required)**: N/A tons/year	9.b. **Projected Monitoring Period**: N/A ☐ 5 years ☐ 10 years
10. **Calculation of Emissions**: PM2.5-PRI (hourly) = 7.6 lb/10^6 ft^3 x (0.081 x 10^6 ft^3/hr) = 0.62 lb/hr PM2.5-PRI (annual) = 0.62 lb/hr x 8,760 hr/yr x 1 ton/2,000 lb = 2.7 ton/yr	
11. **Potential, Fugitive, and Actual Emissions Comment**:	

F2. EMISSIONS UNIT POLLUTANT DETAIL INFORMATION - ALLOWABLE EMISSIONS N/A

Complete Subsection F2 if the pollutant identified in Subsection F1 is or would be subject to a numerical emissions limitation.

Allowable Emissions Numerical Emissions Limitation ___of ___

1. **Basis for Numerical Emissions Limitation Code**:	2. **Future Effective Date of Numerical Emissions Limitation**:
3. **Numerical Emissions Limitation and Units**:	4. **Equivalent Allowable Emissions**: lbs/hour tons/year
5. **Method of Compliance**:	
6. **Allowable Emissions Comment** (Description of Operating Method):	

Allowable Emissions Numerical Emissions Limitation ___of ___

1. **Basis for Numerical Emissions Limitation Code**:	2. **Future Effective Date of Numerical Emissions Limitation**:
3. **Numerical Emissions Limitation and Units**:	4. **Equivalent Allowable Emissions**: lbs/hour tons/year
5. **Method of Compliance**:	
6. **Allowable Emissions Comment** (Description of Operating Method):	

F1. EMISSIONS UNIT POLLUTANT DETAIL INFORMATION – POTENTIAL, FUGITIVE, AND ACTUAL EMISSIONS

(Optional for unregulated emissions units.)

Complete a Subsection F1 for each pollutant identified in Subsection E if applying for an air construction permit or concurrent processing of an air construction permit and a revised or renewal Title V operation permit. Complete for each emissions-limited pollutant identified in Subsection E if applying for an air operation permit.

Potential, Estimated Fugitive, and Baseline & Projected Actual Emissions

1. **Pollutant Emitted**: PB	2. **Total Percent Efficiency of Control**: N/A
3. **Potential Emissions** 0.000041 lb/hour 0.00018 ton/year	4. **Synthetically-Limited?** ☐ Yes ☒ No
5. **Range of Estimated Fugitive Emissions (as applicable)**: N/A _____ to _____ tons/year	
6. **Emission Factor**: 0.0005 lb/10^6 ft^3 natural gas burned **Reference**: AP-42, Table 1.4-2	7. **Emissions Method Code**: 3B
8.a. **Baseline Actual Emissions (if required)**: N/A tons/year	8.b. **Baseline 24-month Period**: N/A From: To:
9.a. **Projected Actual Emissions (if required)**: N/A tons/year	9.b. **Projected Monitoring Period**: N/A ☐ 5 years ☐ 10 years
10. **Calculation of Emissions**: PB (hourly) = 0.0005 lb/10^6 ft^3 x (0.081 x 10^6 ft^3/hr) = 0.000041 lb/hr PB (annual) = 0.000041 lb/hr x 8,760 hr/yr x 1 ton/2,000 lb = 0.00018 ton/yr	
11. **Potential, Fugitive, and Actual Emissions Comment**:	

F2. EMISSIONS UNIT POLLUTANT DETAIL INFORMATION - ALLOWABLE EMISSIONS N/A

Complete Subsection F2 if the pollutant identified in Subsection F1 is or would be subject to a numerical emissions limitation.

Allowable Emissions Numerical Emissions Limitation ___of ___

1. **Basis for Numerical Emissions Limitation Code**:	2. **Future Effective Date of Numerical Emissions Limitation**:
3. **Numerical Emissions Limitation and Units**:	4. **Equivalent Allowable Emissions**: lbs/hour tons/year
5. **Method of Compliance**:	
6. **Allowable Emissions Comment** (Description of Operating Method):	

Allowable Emissions Numerical Emissions Limitation ___of ___

1. **Basis for Numerical Emissions Limitation Code**:	2. **Future Effective Date of Numerical Emissions Limitation**:
3. **Numerical Emissions Limitation and Units**:	4. **Equivalent Allowable Emissions**: lbs/hour tons/year
5. **Method of Compliance**:	
6. **Allowable Emissions Comment** (Description of Operating Method):	

F1. EMISSIONS UNIT POLLUTANT DETAIL INFORMATION – POTENTIAL, FUGITIVE, AND ACTUAL EMISSIONS

(Optional for unregulated emissions units.)

Complete a Subsection F1 for each pollutant identified in Subsection E if applying for an air construction permit or concurrent processing of an air construction permit and a revised or renewal Title V operation permit. Complete for each emissions-limited pollutant identified in Subsection E if applying for an air operation permit.

Potential, Estimated Fugitive, and Baseline & Projected Actual Emissions

1. **Pollutant Emitted**: SAM	2. **Total Percent Efficiency of Control**: N/A
3. **Potential Emissions** 0.075 lb/hour 0.33 ton/year	4. **Synthetically-Limited?** ☐ Yes ☒ No
5. **Range of Estimated Fugitive Emissions (as applicable)**: N/A _____ to _____ tons/year	
6. **Emission Factor**: 0.93 lb/10^6 ft^3 natural gas burned **Reference**: Materials Balance	7. **Emissions Method Code**: 2
8.a. **Baseline Actual Emissions (if required)**: N/A tons/year	8.b. **Baseline 24-month Period**: N/A From: To:
9.a. **Projected Actual Emissions (if required)**: N/A tons/year	9.b. **Projected Monitoring Period**: N/A ☐ 5 years ☐ 10 years
10. **Calculation of Emissions**: SAM (hourly) = 0.93 lb/10^6 ft^3 x (0.081 x 10^6 ft^3/hr) = 0.075 lb/hr SAM (annual) = 0.075 lb/hr x 8,760 hr/yr x 1 ton/2,000 lb = 0.33 ton/yr	
11. **Potential, Fugitive, and Actual Emissions Comment**: SAM emission factor (Field 6) based on 10% of SO_2 to SO_3 and 100% conversion of SO_3 to SAM.	

F2. EMISSIONS UNIT POLLUTANT DETAIL INFORMATION - ALLOWABLE EMISSIONS N/A

Complete Subsection F2 if the pollutant identified in Subsection F1 is or would be subject to a numerical emissions limitation.

Allowable Emissions Numerical Emissions Limitation ___of ___

1. **Basis for Numerical Emissions Limitation Code**:	2. **Future Effective Date of Numerical Emissions Limitation**:
3. **Numerical Emissions Limitation and Units**:	4. **Equivalent Allowable Emissions**: lbs/hour tons/year
5. **Method of Compliance**:	
6. **Allowable Emissions Comment** (Description of Operating Method):	

Allowable Emissions Numerical Emissions Limitation ___of ___

1. **Basis for Numerical Emissions Limitation Code**:	2. **Future Effective Date of Numerical Emissions Limitation**:
3. **Numerical Emissions Limitation and Units**:	4. **Equivalent Allowable Emissions**: lbs/hour tons/year
5. **Method of Compliance**:	
6. **Allowable Emissions Comment** (Description of Operating Method):	

G. VISIBLE EMISSIONS INFORMATION

Complete Subsection G if this emissions unit is or would be subject to a unit-specific visible emissions limitation.

Visible Emissions Limitation: Visible Emissions Limitation 1 of 1

1. **Visible Emissions Subtype**: VE20	2. **Basis for Opacity Limit**: ☒ Rule ☐ Other
3. **Opacity Limit** Normal Conditions: 20 % Exceptional Conditions: 27 % Maximum Period of Excess Opacity Allowed: 6 min/hour	
4. **Method of Compliance**: Exclusive use of natural gas containing no more than 2.0 grains S per 100 ft^3.	
5. **Visible Emissions Comment**: Rule 62-296.406(1), F.A.C.	

Visible Emissions Limitation: Visible Emissions Limitation of

1. **Visible Emissions Subtype**:	2. **Basis for Opacity Limit**: ☐ Rule ☐ Other
3. **Opacity Limit** Normal Conditions: % Exceptional Conditions: % Maximum Period of Excess Opacity Allowed: min/hour	
4. **Method of Compliance**:	
5. **Visible Emissions Comment**:	

H. CONTINUOUS MONITOR INFORMATION N/A

Complete Subsection H if this emissions unit is or would be subject to continuous monitoring.

Continuous Monitoring System: Continuous Monitor of

1. **Parameter Code**:	2. **Pollutant(s)**:
3. **CMS Requirement**:	
4. **Monitor Manufacturer**: **Model Number**:	**Serial Number**:
5. **Installation Date**:	6. **Performance Specification Test Date**:
7. **Continuous Monitor Comment**:	

Continuous Monitoring System: Continuous Monitor of

1. **Parameter Code**:	2. **Pollutant(s)**:
3. **CMS Requirement**:	
4. **Monitor Manufacturer**: **Model Number**:	**Serial Number**:
5. **Installation Date**:	6. **Performance Specification Test Date**:
7. **Continuous Monitor Comment**:	

I. EMISSIONS UNIT ADDITIONAL INFORMATION

Additional Requirements for All Applications, Except as Otherwise Stated

1. **Process Flow Diagram** (Required for all permit applications, except Title V air operation permit revision applications if this information was submitted to the department within the previous five years and would not be altered as a result of the revision being sought)

   ☒ Attached, Document ID: Attachment B ☐ Previously Submitted, Date _____

2. **Fuel Analysis or Specification** (Required for all permit applications, except Title V air operation permit revision applications if this information was submitted to the department within the previous five years and would not be altered as a result of the revision being sought)

   ☒ Attached, Document ID: Attachment E ☐ Previously Submitted, Date _____

3. **Detailed Description of Control Equipment** (Required for all permit applications, except Title V air operation permit revision applications if this information was submitted to the department within the previous five years and would not be altered as a result of the revision being sought)

   ☐ Attached, Document ID: _____ ☒ Not Applicable

4. **Procedures for Startup and Shutdown** (Required for all operation permit applications, except Title V air operation permit revision applications if this information was submitted to the department within the previous five years and would not be altered as a result of the revision being sought)

   ☐ Attached, Document ID: _____ ☐ Previously Submitted, Date _____

   ☐ Not Applicable (Not available – will be provided when received from boiler vendor)

5. **Operation and Maintenance Plan** (Required for all permit applications, except Title V air operation permit revision applications if this information was submitted to the department within the previous five years and would not be altered as a result of the revision being sought)

   ☐ Attached, Document ID: _____ ☐ Previously Submitted, Date _____

   ☒ Not Applicable

6. **Compliance Demonstration Reports/Records**

   ☐ Attached, Document ID: _____

   Test Date(s)/Pollutant(s) Tested: _____

   _____

   ☐ Previously Submitted, Date: _____

   Test Date(s)/Pollutant(s) Tested: _____

   _____

   ☐ To be Submitted, Date (if known):_____

   Test Date(s)/Pollutant(s) Tested: _____

   ☒ Not Applicable

   Note: For FESOP applications, all required compliance demonstration records/reports must be submitted at the time of application. For Title V air operation permit applications, all required compliance demonstration reports/records must be submitted at the time of application, or a compliance plan must be submitted at the time of application.

7. **Other Information Required by Rule or Statute**

   ☐ Attached, Document ID: _____ ☒ Not Applicable

I. EMISSIONS UNIT ADDITIONAL INFORMATION (CONTINUED)

Additional Requirements for Air Construction Permit Applications

1. **Control Technology Review and Analysis** (Rules 62-212.400(10) and 62-212.500(7), F.A.C.; 40 CFR 63.43(d) and (e)) ☐ Attached, Document ID: _____ ☒ Not Applicable
2. **Good Engineering Practice Stack Height Analysis** (Rules 62-212.400(4)(d) and 62-212.500(4)(f), F.A.C.) ☐ Attached, Document ID: _____ ☒ Not Applicable
3. **Description of Stack Sampling Facilities** (Required for proposed new stack sampling facilities only) ☐ Attached, Document ID: _____ ☒ Not Applicable

Additional Requirements for Title V Air Operation Permit Applications

1. **Identification of Applicable Requirements** (For federal regulations where applicability is dependent on the specific type of emissions unit and/or emissions unit subgroup, provide the level of detail required to determine which specific set of regulations apply.): ☒ Attached, Document ID: Attachment D
2. **Compliance Assurance Monitoring** ☐ Attached, Document ID: _____ ☒ Not Applicable
3. **Alternative Methods of Operation** ☐ Attached, Document ID: ☒ Not Applicable
4. **Alternative Modes of Operation (Emissions Trading)** ☐ Attached, Document ID: _____ ☒ Not Applicable

Additional Requirements Comment

ATTACHMENT A

FACILITY PLOT PLAN

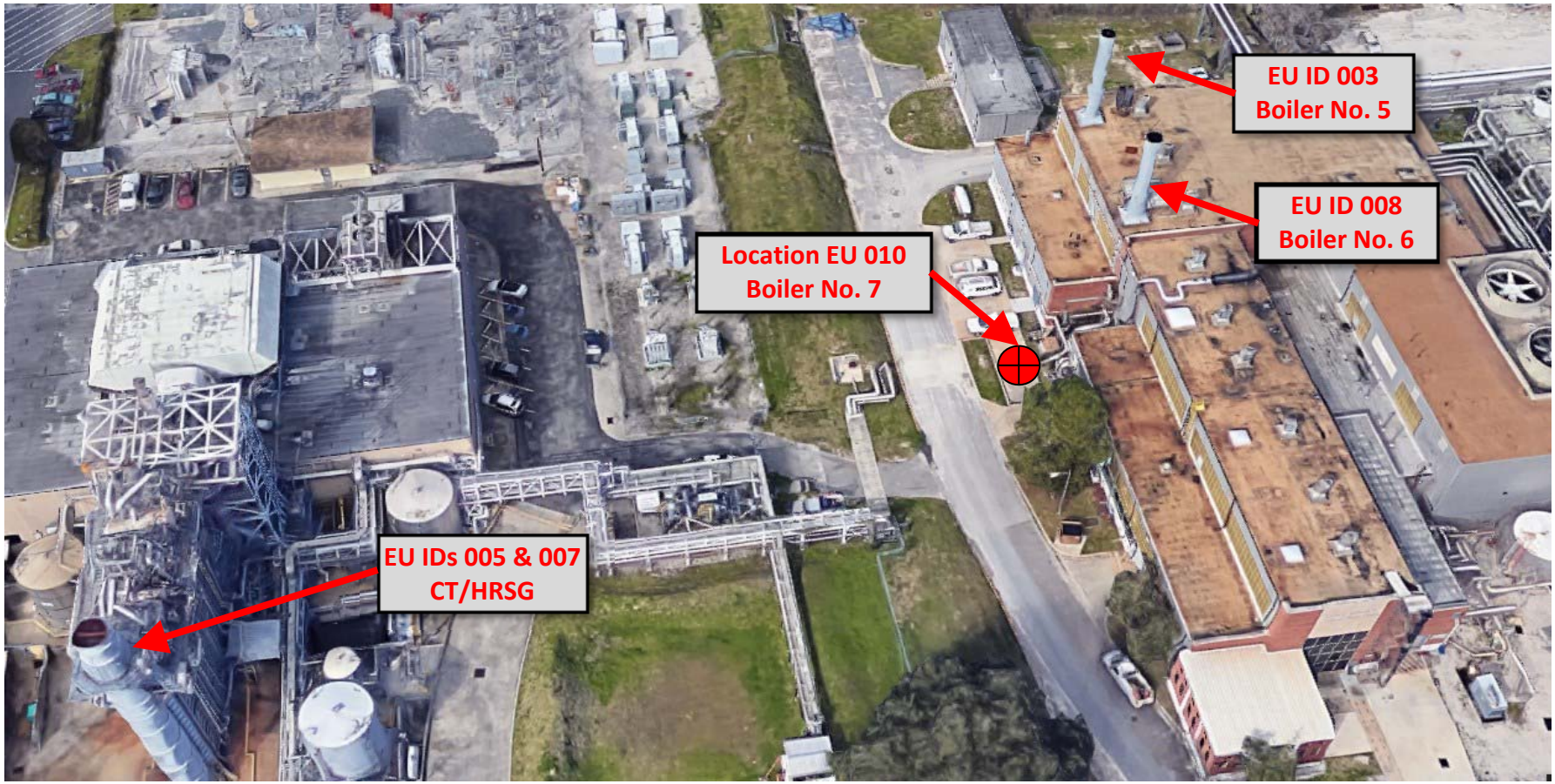

ATTACHMENT A

UF COGENERATION PLANT - FACILITY PLOT PLAN

Source: TD Air Quality Consulting, LLC, 2018.

DUKE ENERGY®

ATTACHMENT B

PROCESS FLOW DIAGRAM
BOILER NO. 7

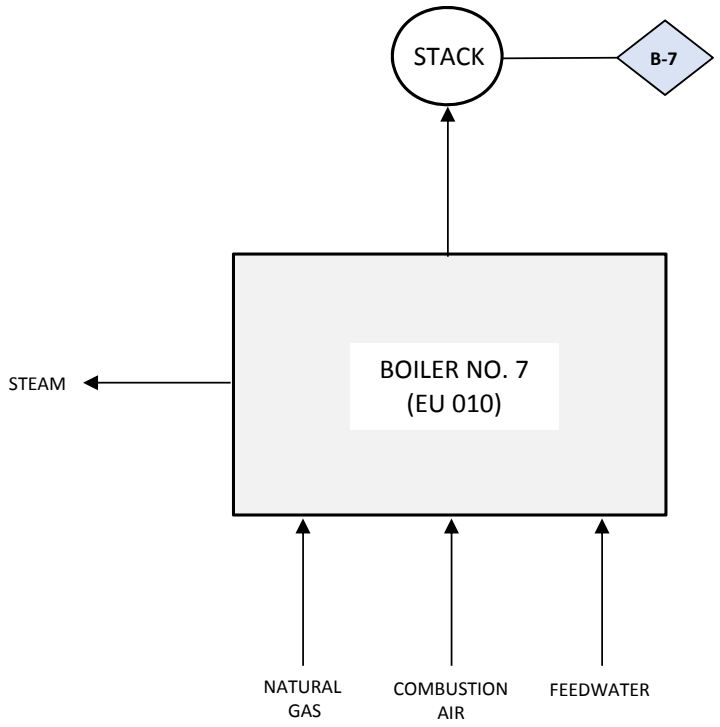

ATTACHMENT B

UF COGEN PROCESS FLOW DIAGRAM
BOILER NO. 7 (EU 010)

Source: TD Air Quality Consulting LLC, 2018.

ATTACHMENT C

DESCRIPTION OF PROPOSED CONSTRUCTION

ATTACHMENT C – DESCRIPTION OF PROPOSED CONSTRUCTION

DEF plans to modify the UF Cogen facility by installing a third backup steam boiler identified as Boiler No. 7. The backup steam boiler is a used, trailer-mounted, watertube steam boiler provided by Indeck Power Equipment Company (Indeck). Although trailer-mounted, the boiler will operate as a stationary emission unit since the terms of the Indeck sale include rendering the trailer unusable for future transportation purpose. The steam boiler was built in 2007 and has a design saturated steam generation rate of 60,000 pounds per hour at a design pressure of 395 pounds per square inch gauge (psig). Boiler No. 7 will be equipped with a dry low-NO_x (DLN) burner and flue gas recirculation (FGR) to control NO_x emissions.

The steam boiler is equipped to fire either natural gas or No. 2 fuel oil. However, the boiler will only be fired with natural gas and will be physically incapable of firing No. 2 fuel oil since fuel oil will not be piped to the boiler. The boiler's maximum natural gas consumption rate is 81,000 standard cubic feet per hour (scfh) resulting in a maximum heat input of 82.6 million British thermal units per hour (MMBtu/hr) based on a natural gas heat content of 1,020 Btu/ft^3.

Excluding readiness testing and routine maintenance activities, Boiler No. 7 will only operate when at least one of the two existing backup steam boilers is out of service i.e., Boiler No. 7 will serve as a replacement for either Boiler No. 5 or No. 6. The purpose of the third backup boiler is to provide an additional source of steam in the event either or both of the two existing backup steam boilers are out of service. As a contingency in the event either Boiler No. 5 or No. 6 becomes non-operational for an extended period of time., DEF requests that Boiler No. 7 be authorized to operate up to 8,760 hours per year. However, Boiler No. 7 is expected to operate infrequently since during normal operations it will serve as a backup to the existing backup boilers. There will be no changes to the present operation of the UF Cogen CT/HRSG unit or the two existing backup steam boilers.

ATTACHMENT C – DESCRIPTION OF PROPOSED CONSTRUCTION

Installation of Boiler No. 7 is projected to begin approximately on 05/14/2018. The latest date of completion of construction is estimated to occur approximately on 07/01/2018.

Additional boiler technical information is provided in Attachment H – Boiler Specifications.

ATTACHMENT D

RULE APPLICABILITY ANALYSIS

ATTACHMENT D - RULE APPLICABILITY ANALYSIS

FEDERAL

New Source Performance Standards

40 CFR 60, Subpart A: General Provisions

§60.1	Applicability
§60.7	Notification and Recordkeeping
§60.11	Compliance with Standards and Maintenance Requirements
§60.19	General Notification and Reporting Requirements

40 CFR 60, Subpart Dc: Standards of Performance for Small Industrial-Commercial-Institutional Steam Generating Units

§60.40c	Applicability and Designation of Affected Facility
60.40c(a)	Heat input ≥ 10 and ≤ 100 MMBtu/hr and commenced construction after 6/9/1989.
§60.48c	Reporting and Recordkeeping Requirements
§60.48c(a)	Submit notification of the date of construction or reconstruction and actual startup per §60.7. Notification shall include the design heat input capacity of the affected facility, identification of fuels to be combusted, and the annual capacity factor at which the owner or operator anticipates operating the affected facility based on all fuels fired and based on each individual fuel fired.
§60.48c(g)(1)	Maintain records of the amount of fuel combusted each operating day
§60.48c(g)(2)	As alternative to §60.48c(g)(1), records may be maintained of the amount of fuel combusted each calendar month
§60.48c(i)	All required records shall be maintained for a period of two years following the date of the record

STATE

CHAPTER 62-4, F.A.C. (Amended 02-17-2016)	**PERMITS**
62-4.030, F.A.C.:	General Prohibition
62-4.050(1) – (3), F.A.C.:	Procedure to Obtain Permits; Applications

62-4.050(4)(a)2, F.A.C.:	Processing fee is not required for an emission unit not subject to PSD or NAA preconstruction review if the facility containing the emission unit holds a Title V air operation permit
62-4.055, F.A.C.:	Permit Processing
62-4.070, F.A.C.:	Standards for Issuing or Denying Permits; Issuance; Denial
62-4.130, F.A.C.:	Plant Operation - Problems
62-4.160, F.A.C.:	Permit Conditions

CHAPTER 62-210, F.A.C. (Amended 06-22-2017)	**STATIONARY SOURCES - GENERAL REQUIREMENTS**
62-210.300(1), F.A.C.:	Air Construction Permits
62-210.350(1)(a)1, F.A.C.:	Public Notice of Proposed Agency Action for Air Construction Permits
62-210.360(1), F.A.C.:	Duty to notify the Department in writing of minor corrections or amendments to Information contained in a permit
62-210.650, F.A.C.:	Circumvention
62-210.700, F.A.C.:	Excess Emissions
62-210.900(1), F.A.C.:	Application for Air Permit – Long Form, Form and Instructions

CHAPTER 62-212, F.A.C. (Amended 03-28-2012)	**STATIONARY SOURCES - PRECONSTRUCTION REVIEW**
62-212.300, F.A.C.:	General Preconstruction Review Requirements

CHAPTER 62-213, F.A.C. (Amended 12-31-2013)	**OPERATION PERMITS FOR MAJOR SOURCES OF AIR POLLUTION**
62-213.205(2), F.A.C.:	No permit application processing fee, renewal fee, modification fee or amendment fee is required for an operation permit for a Title V source
62-213.405, F.A.C.:	Concurrent Processing of Permit Applications
62-213.430(4), F.A.C.:	Permit Revision Procedures

CHAPTER 62-296, F.A.C. (Amended 02/08/2017)	**STATIONARY SOURCES - EMISSION STANDARDS**
62-296.100(3), F.A.C.:	Duty to comply with any 40 CFR Part 60 (NSPS) standard orrequirement
62-296.406, F.A.C.	Fossil Fuel Steam Generators with Less Than 250 Million Btu Per Hour Heat Input, New and Existing Emission Units
62-296.406(1):	Visible Emission Limits - Not to exceed 20 percent opacity except for one six-minute period per one-hour period during which opacity shall not exceed 27percent
62-296.406(2):	Particulate Matter - Best Available Control Technology (BACT)
62-296.406(3):	Sulfur Dioxide - Best Available Control Technology (BACT)
CHAPTER 62-297, F.A.C. (Amended 03/09/2015)	**STATIONARY SOURCES - EMISSION MONITORING**
62-297.310(8)(a)5.e:	Exemption from Annual Emission Tests - Annual emissions test is not required for any emissions unit with emissions generated solely from the combustion of fuel, provided that the emissions unit does not burn any liquid fuel or solid fuel or fuel blend for more than 400 hours combined, other than during startup, during the calendar year.
62-297.310(8)(b)3.d:	Exemption from Emission Tests Prior to Renewal of an Air Operation Permit - Emission test prior to renewal of an air operation permit is not required for any emissions unit with emissions generated solely from the combustion of fuel, provided that, in the previous five-year period of permitted operation, the emissions unit did not burn any liquid fuel or solid fuel or fuel blend for more than 400 hours combined, other than during startup, during each calendar year included in the five-year period of permitted operation

ATTACHMENT E

FUEL SPECIFICATIONS

ATTACHMENT E - FUEL SPECIFICATIONS

Natural Gas (typical composition)

Component	Mole Percent (by volume)
Gas Composition	
Methane	96.195
Ethane	2.379
Propane	0.190
Hexane+	0.018
I-butane	0.010
N-butane	0.007
Pentane	0.002
Nitrogen	0.527
Carbon Dioxide	0.673
Other Characteristics	
Heat content (HHV)	1,020 Btu/ft^3 at 14.73 psia, dry
Real specific gravity	0.5776
Sulfur content (maximum)	2.0 gr/100 scf

Note: Btu/ft^3 = British thermal unit per cubic foot.
psia = pound per square inch absolute.
gr/100 scf = grain per 100 standard cubic feet.

ATTACHMENT F

EMISSION RATE CALCULATIONS

Attachment F - Emission Rate Calculations
DEF UFCogen Boiler No. 7
Potential Emission Rates - PSD Pollutants

Annual Hours	8,760	hr/yr
Maximum Fuel Use	0.081	10^6 ft^3/hr
Natural Gas Heat Content	1,020	Btu/ft^3,HHV
Heat Input	82.6	MMBtu/hr, HHV

Pollutant	FDEP Code	Emission Factors		Potential Emissions		PSD SER[c] (ton/yr)	Percent of PSD SER (%)	Exceed PSD SER (Y/N)
		AP-42[a] ($lb/10^6$ ft^3)	Indeck ($lb/10^6$ Btu)[b]	(lb/hr)	(ton/yr)			
NO_x	NOX		0.10	8.3	36.4	40	91.0	N
CO[d]	CO		0.074	6.1	26.7	100	26.7	N
PM (filterable)	PM	1.9		0.15	0.657	25	2.63	N
PM_{10} (filterable + condensable)	PM10-PRI	7.6		0.62	2.72	15	18.1	N
$PM_{2.5}$ (filterable + condensable)	PM2.5-PRI	7.6		0.62	2.70	10	27.0	N
SO_2[e]	SO2	6.0		0.49	2.15	40	5.38	N
VOC	VOC	5.5		0.45	1.97	40	4.93	N
Lead	PB	0.0005		0.000041	0.000180	0.6	0.0300	N
Sulfuric Acid Mist[f]	SAM	0.93		0.075	0.329	7	4.70	N
Greenhouse Gases (as CO_2e)	GHG	[g]		9,675	42,375	75,000	56.5	N[h]

[a] AP-42: Table 1.4-2 (PM, PM_{10}, $PM_{2.5}$, SO_2, VOC, and lead)

[b] At higher heating value (HHV)

[c] SER: Significant Emission Rate per Rule 62-210.200(256), F.A.C.

[d] CO emission factor based on exhaust CO concentration of 100 ppmvd @ 3% O_2

[e] SO_2 emission factor based on natural gas sulfur content of 2.0 gr S/100 ft^3

[f] SAM emission factor based on 10% volume conversion of SO_2 to SO_3, and 100% volume conversion of SO_3 to H_2SO_4

[g] GHG emissions (as CO_2e) calculated using data and procedures from Subparts A and C of 40 CFR Part 98.

[h] PSD review is only required if GHG emissions are greater than 75,000 tpy <u>and</u> any other PSD pollutant exceeds its SER.

Attachment F - Emission Rate Calculations
DEF UFCogen Boiler No. 7
Potential Emission Rates - Hazardous Air Pollutants

Annual Hours	8,760	hr/yr
Maximum Fuel Use	0.081	10^6 ft^3/hr
Natural Gas Heat Content	1,020	Btu/ft^3,HHV
Heat Input	82.6	MMBtu/hr, HHV

Pollutant	FDEP Code	Emission Factor AP-42[(a)] (lb/10^6 ft^3)	Potential Emissions (lb/hr)	Potential Emissions (ton/yr)
Benzene	H017	2.10E-03	1.70E-04	7.45E-04
Dichlorobenzene	H061	1.20E-03	9.72E-05	4.26E-04
Formaldehyde	H095	7.50E-02	6.08E-03	2.66E-02
Hexane	H104	1.80E+00	1.46E-01	6.39E-01
Naphthalene	H132	6.10E-04	4.94E-05	2.16E-04
Toluene	H169	3.40E-03	2.75E-04	1.21E-03
POM/PAH	H151	8.82E-05	7.14E-06	3.13E-05
Arsenic Compounds	H015	2.00E-04	1.62E-05	7.10E-05
Beryllium Compounds	H021	1.20E-05	9.72E-07	4.26E-06
Cadmium Compounds	H027	1.10E-03	8.91E-05	3.90E-04
Chromium Compounds	H046	1.40E-03	1.13E-04	4.97E-04
Cobalt Compounds	H0347	8.40E-05	6.80E-06	2.98E-05
Lead Compounds	H110	5.00E-04	4.05E-05	1.77E-04
Manganese Compounds	H113	3.80E-04	3.08E-05	1.35E-04
Mercury Compounds	H114	2.60E-04	2.11E-05	9.22E-05
Nickel Compounds	H133	2.10E-03	1.70E-04	7.45E-04
Selenium	H162	2.40E-05	1.94E-06	8.51E-06
Total HAPs	**HAPS**		**0.15**	**0.670**

POM/PAH	AP-42 EF[(a)] (lb/10^6 ft^3)
2-Methylnaphthalene	2.40E-05
3-Methylchloranthrene	1.80E-06
7,12-Dimethylbenz(a)anthracene	1.60E-05
Acenaphthene	1.80E-06
Acenaphthylene	1.80E-06
Anthracene	2.40E-06
Benz(a)anthracene	1.80E-06
Benzo(a)pyrene	1.20E-06
Benzo(b)fluoranthene	1.80E-06
Benzo(g,h,i)perylene	1.20E-06
Benzo(k)fluoranthene	1.80E-06
Chrysene	1.80E-06
Dibenzo(a,h)anthracene	1.20E-06
Fluoranthene	3.00E-06
Fluorene	2.80E-06
Indeno(1,2,3-cd)pyrene	1.80E-06
Phenanathrene	1.70E-05
Pyrene	5.00E-06
Totals	**8.82E-05**

[(a)] AP-42: Table 1.4-3 (organic compounds) and Table 1.4-4 (metals)

ATTACHMENT G

PSD APPLICABILITY ANALYSIS

ATTACHMENT G – PSD APPLICABILITY ANALYSIS

The Department's requirements concerning PSD review are codified in Rule 62-212.400, F.A.C. PSD review applies to the construction of any new major stationary source or to the major modification of any existing major stationary source.

UF Cogen is an existing major stationary source since the facility has potential emissions of 100 tons per year (tpy) or more of any PSD pollutant and belongs to one of the 28 listed major facility categories; i.e., fossil fuel-fired steam electric plants of more than 250 million British thermal units per hour heat input. A *major modification* is defined by Rule 62-210.200(167),F.A.C. as:

> "Any physical change in or change in the method of operation of a major stationary source that would result in a significant emissions increase of a PSD pollutant and a significant net emissions increase of that pollutant from the major stationary source"

For the construction of new emissions units (e.g., Boiler No. 7), as stated in Rule 62-214.400(2)(a)2, F.A.C. a significant emissions increase of a PSD pollutant will occur if the difference between the potential to emit (PTE) from each new emissions unit following completion of the construction and the baseline actual emissions of these units before the construction equals or exceeds the significant emissions rate for that pollutant. This procedure is called the Baseline Actual-to-Potential Applicability Test for Construction of New Emissions Units. The significant emissions rates (SERs) are defined by Rule 62-210.200(256),F.A.C. which includes emission rates for PSD regulated pollutants; e.g., 40 tpy for NOx.

For new emissions units, *baseline actual emissions* (BAE) are defined by Rule 62-210.200(256),F.A.C. as:

> "For a new emissions unit, the baseline actual emissions for purposes of determining the emissions increase that will result from the initial construction and operation of such unit shall equal zero; and thereafter, for all other purposes, shall equal the unit's potential to emit."

Based on the above Department rules, Boiler No. 7 will qualify as a major modification to an existing major source and be subject to PSD review if the PTE of any PSD pollutant exceeds the Rule 62-210.200(256),F.A.C. SERs since baseline actual emissions are zero.

Boiler No. 7 PSD pollutant PTE, BAE, and the SERs are provided in the following table:

PSD Pollutant	PTE (ton/yr)	BAE (ton/yr)	PTE - BAE (ton/yr)	PSD SER (ton/yr)	Percent of PSD SER	Exceed SER (Yes/No)
SO_2	2.2	0.0	2.2	40	5.4	No
NO_x	36.4	0.0	36.4	40	91.0	No
CO	26.7	0.0	26.7	100	26.7	No
VOC	2.0	0.0	2.0	40	4.9	No
PM	0.66	0.0	0.66	25	2.6	No
PM_{10}	2.7	0.0	2.7	15	18.1	No
$PM_{2.5}$	2.7	0.0	2.7	10	27.0	No
Pb	0.00018	0.0	0.00018	0.6	0.030	No
Hg	Neg.	0.0	Neg.	0.1	Neg.	No
SAM	0.33	0.0	0.33	7	4.7	No
GHG (as CO_2e)	42,375	0.0	42,375	75,000	56.5	No

For GHG emissions, PSD review is only required if GHG emissions are greater than 75,000 tpy <u>and</u> another PSD pollutant exceeds its SER; i.e., a source cannot become subject to PSD review solely on the basis of its GHG emissions.

Note that the NO_x PTE shown in the above table significantly over-estimates NO_x emissions since it was calculated using an emission factor of 0.10 lb $NO_x/10^6$ Btu provided by the boiler vendor, Indeck Power Equipment Company (Indeck). This emission factor equates to 102 lb $NO_x/10^6$ scf natural gas (NG) based on a NG heat content of 1,020 Btu/scf. Boiler No. 7 will be equipped with low-NO_x burners (LNB) and flue gas recirculation (FGR) to control NO_x emissions. The EPA AP-42

Table 1.4-1 NO_x emission factor for small boilers less than 100 x 10^6 Btu/hr heat input equipped with LNB and FGR is 32 lb NOx/10^6 scf NG which is approximately one-third of the Indeck estimate.

As shown in the above table, the Boiler No. 7 PTEs are below the SERs for all PSD pollutants. Accordingly, Boiler No. 7 qualifies as a minor modification and is not subject to PSD review. Emission rate calculations for Boiler No. 7 are provided in Attachment F.

ATTACHMENT H

BOILER SPECIFICATIONS

CORPORATE OFFICE 1111 Willis Avenue • Wheeling, Illinois 60090-5841
TEL 847.541.8300 FAX 847.541.9984 WEB www.indeck.com
PLANT 4300 Beaudry • St-Hyacinthe, Quebec, Canada J2S 8A5

INDECK®
POWER EQUIPMENT COMPANY

The descriptions below and the attachments will provide you with the information you are requesting. If you have any questions after reviewing this proposal, please do not hesitate to give me a call.

INDECK POWER EQUIPMENT COMPANY PROPOSES TO FURNISH THE FOLLOWING:

60,000 PPH Emergency Boiler (Item No. 114747 Trailer 204L):
One (1) used 60,000 PPH Indeck trailer-mounted watertube steam boiler designed, built in 2007, and stamped to the ASME Code for 395 PSIG design pressure with an operating pressure range of 100 - 360 PSIG. The unit is arranged to fire either natural gas or No. 2 fuel oil, with either fuel requiring a gas pilot. The boiler is complete with the manufacturer's standard boiler trim, burner and controls including a pneumatic feedwater control valve, Honeywell electric single point positioning combustion controls and an IRI approved Fireye burner management system. Main electrical power is 480 volts, 3 phase, 60 Hertz. An integrally mounted and wired transformer is provided in the boiler control panel for single phase control voltage. The following is a list of accessories which are shipped loose with the unit for field mounting by customer.

a. Stainless Steel Stub stack and transition piece with rain cap
b. Steam non-return valve
c. Safety relief valves set at 270 & 275 psig
d. Bottom drum tandem blow down valves

Indeck is offering the trailer in which the boiler is currently mounted as requested per your specification. As a provision of the sale, the goose neck and/or the rear axle of the trailer are to be cut off; or the wheels are to be removed rendering the trailer unusable for future transportation purposes. The execution and associated costs inherent to the removal of these items are the responsibility of the Installing Contractor and/or Buyer.

Indeck is currently making offer of this unit based on its ability to meet the following emissions limits with no FGR while firing on natural gas;

- 0.1 lb/mmbtu NOx (3% oxygen corrected)
- 100 ppmdv CO (3% oxygen corrected)

60,000 PPH RENTAL BOILER SPECIFICATIONS

(Trailers 203L, 204L)

General Information:

One (1) packaged watertube boiler, capable of generating 60,000 pounds per hour of saturated steam, constructed in accordance with the ASME Code, 395 psig design, arranged for natural gas or #2 oil firing, complete with manufacturer's standard boiler trim, Low NOx burner and combustion controls. (Without economizer)

Boiler Information:

Design Pressure	395 PSIG
Operating Pressure (min - max.)	100 - 360 PSIG

Gas Fired Requirements:

Gas Consumption (at MCR)	81,000 SCFH
Gas Supply Pressure Required at Connection, (Regulator Not Included)	15 PSIG (Constant)

Oil Fired Requirements: (#2 Oil Only)

Oil Consumption (at MCR)	565 GPH
Oil Supply Pressure at Oil Pump Connection (min. - max.)	Positive - 30 PSIG
Pilot Gas Pressure Required for Oil Start-up	15 PSIG (Constant)

Oil Atomization: (Steam or Air)

Oil Atomization - Steam Consumption	624 LB/HR
Oil Atomization - Steam Pressure	125 PSIG
Oil Atomization - Air Consumption	30 SCFM
Oil Atomization - Air Pressure (min. - max.)	80 - 120 PSIG

Instrument Air:

Instrument Air Required at Fuel Train & Feedwater Valve	60 - 100 PSIG

Feedwater Requirements:

Feedwater Pressure	60-100 PSIG Above Operating Steam Drum Pressure
Minimum Feedwater Temperature	227°F (Deaerated)

Electrical Requirements - Single Point Connection:

Main Power Supply Required	480 VAC/ 3 PH/ 60 HZ
Electrical Amps - Gas Fired	165 AMPS
Electrical Amps - Oil Fired	175 AMPS
F.D. Fan	100 HP
Oil Pump (#2 Oil Only)	5 HP
FD Fan & Oil Pump Motor Starters	Included
Control Power Transformer (480 VAC to 120 VAC)	Included

Auxiliary Equipment to be Field Mounted by Others:

(1) Stack & Transition Assembly
(1) 8" Steam Non-Return Valve
(2) Tandem Blowdown Valves
(1) Blowdown Valve Spool Piece
(2) ASME Safety Relief Valves
(1) Forced Gas Recirculation Kit (Optional)

Dimensional Information:

Boiler Width	10'-6"
Trailer Length	52'-0"
Boiler Height with Trailer	14'-0"
Shipping Weight	90,000 LBS
Operating Weight	98,950 LBS

* Emissions Information	Upon Request

INDECK

For further information, see customer connection drawing or contact our office.

Indeck Power Equipment Company * 1111 Willis Avenue, Wheeling, IL 60090 * (847)-541-8300

UNIT REFERENCE:
TRAILER 203L
TRAILER 204L

60,000 PPH 395 PSI RENTAL BOILER

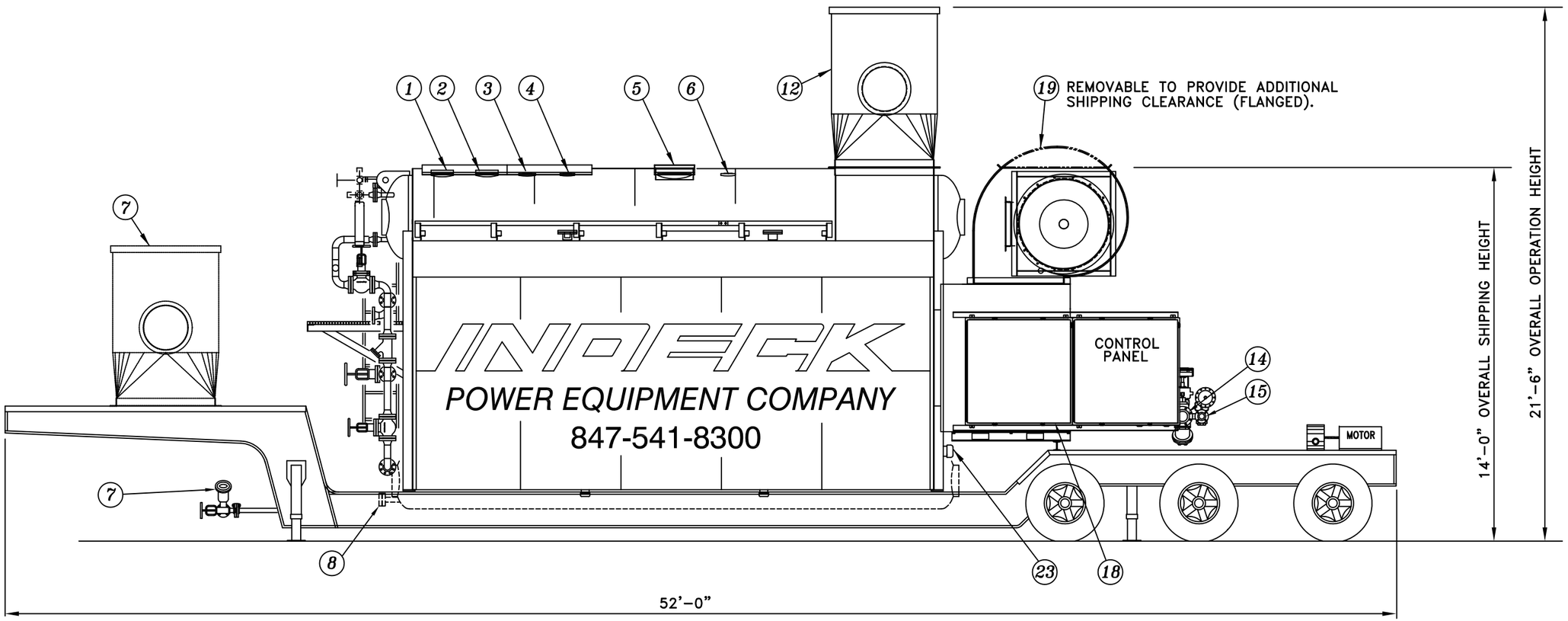

STEAM

1. 2 1/2"-600# SAFETY VALVE CONNECTION (SAFETY VALVE MUST BE REMOVED FOR TRANSPORT)
2. 2 1/2"-600# SAFETY VALVE CONNECTION (SAFETY VALVE MUST BE REMOVED FOR TRANSPORT)
3. 2"-600# SAFETY VALVE CONNECTION (SAFETY VALVE MUST BE REMOVED FOR TRANSPORT)
4. 2"-600# SAFETY VALVE CONNECTION (SAFETY VALVE MUST BE REMOVED FOR TRANSPORT)
5. 8"-300 # MAIN STEAM OUTLET CONNECTION
6. 1" NPT DRUM VENT / AUX CONNECTION
7. 1-1/2"-300# BLOW OFF CONNECTION
8. 1-1/2"-300# LOW DRUM HEATING COIL CONNECTIONS ARE BLANKED.
9. 1" CONTINUOUS BLOWDOWN CONNECTION
10. 2"-300# SOOT BLOWER STEAM SUPPLY CONNECTION (BLANK ON FAR SIDE)

BOILER FEEDWATER

11. 2-1/2"-300# FEEDWATER SUPPLY CONNECTION

FUEL GAS

12. FLUE GAS STACK AND TRANSITION (REMOVED FOR TRANSPORT)
13. 3/4" NPT PILOT GAS CONNECTIONS (NATURAL OR PROPANE)
14. 3"-150 # FUEL GAS CONNECTION
15. 1 1/2"-150 # GAS VENT OUTLET

FUEL OIL

16. 3/4" NPT FUEL OIL INLET (LOCATED ON FAR SIDE OF TRAILER)

ATOMIZING STEAM

17. 1 1/2"-300# AUX ATOMIZING AIR / STEAM CONNECTION (LOCATED BEHIND CABINET)

ELECTRICAL

18. 480/60/3 POWER SUPPLY 150 AMPS

MISC.

19. UPPER F.D. FAN HOUSING
20. 1" NPT CHEMICAL FEED CONNECTION (LOCATED ON OPPOSITE SIDE OF TRAILER)
21. 2"-300# CHEMICAL CLEANING CONNECTION
22. 3/4" NPT FURNANCE PRESS CONNECTION
23. WASHOUT
24. 1" NPT INSTRUMENT AIR CONNECTION

NOTE 1: A NATURAL GAS OR PROPANE PILOT IS REQUIRED FOR OIL
NOTE 2: PROVIDE ADEQUATE WEATHER PROTECTION FOR BURNER, CONTROLS AND PERSONNEL

DESIGN DATA

OVERALL LENGTH:	52'-0"
OVERALL WIDTH:	10'-6"
NET WEIGHT (INCL TRAILER):	90,000 LBS
CONTINUOUS CAPACITY:	60,000 PPH
DESIGN PRESSURE:	395 PSIG
FEEDWATER TEMPERATURE:	227 DEG F
FURNACE VOLUME:	799 CU. FT.
CONVECTION HEATING SURFACE:	3268 SQ. FT.
RADIANT HEATING SURFACE:	532 SQ. FT.
TOTAL HEATING SURFACE:	3800 SQ. FT. (A.S.M.E.)
GAS SUPPLY PRESSURE	15 PSIG (REGULATED BY CUSTOMER)
OIL SUPPLY PRESSURE	30 PSIG FLOODED MAX.
FEED WATER PRESSURE	75-100 PSIG ABOVE OPERATING PRESSURE
INSTRUMENT AIR PRESSURE	50 PSIG MIN. FEEDWATER TRAIN 80 TO 100 PSIG - FUELTRAIN

INDECK 60,000 PPH RENTAL BOILER
INDECK POWER EQUIPMENT COMPANY 1111 WILLIS AVENUE . WHEELING, ILLINOIS 60090
Rev D, 10-11-10 BCD