1007 SW 16th Lane
Ocala, FL 34471
January 6, 2022

Environmental Administrator
Florida Department of Environmental Protection
Hazardous Waste Program and Permitting
2600 Blair Stone Road, M.S. 4560
Tallahassee, FL 32399-2400
(1 Hard Copy and 1 E-copy)
And
Hazardous Waste Supervisor
Florida Department of Environmental Protection
Central District Office
3319 Maguire Boulevard, Suite 232
Orlando, FL 32803
(1 Hard Copy and 1 E-copy)
And
1 E-Copy via Email to: bradley.buselli@dep.state.fl.us
or
If the file is larger than around 30 MB, you should use the drop site (otherwise just email it):
ftp://ftp.dep.state.fl.us/pub/incoming/DWM/Lighting Resources

RE: Complete Renewal Application 30933-003-HO

Lighting Resources is submitting this renewal application for the permit at the Ocala facility.
Payment will be made digitally when the supporting instructions are provided by the Department.

This renewal has been created from previous documents from prior applications up to the most recent updated pages. It has then been reviewed for any changes that have taken place over the years to provide a complete up-to-date document in PDF.

The Closure Cost pages continue to reflect the closure costs from the previous application. LR expects to provide much more current information with a RAI (Request for Additional Information) as vendors were slow to provide required information at this time.

Three changes to note:

1. Air Monitoring now reflects regulations in code to require readings be taken daily.
2. Tracking forms in Excel have been replaced with reports pulled in Netsuite that provide all information by item, counts or weights, and dates. The reports can be run on demand by day, week, month, or year.
3. Maximum inventory has been adjusted as follows:
    a. PCB lighting ballasts decreased from 10 drums to 2.
    b. Batteries have been increased from 24 drums to 48. (Current Disposal cost shows as increase from no cost to around $4,000.)
    c. Non-pcb light ballasts have decreased from 30 drums to 28.

Documents will be provided as noted above. If you should have questions, please contact me at 949-300-7559 or email to susan.richard@lightingresourcesinc.com.

Regards,

Susan Richard

Susan Richard
Chief Compliance Officer

Enclosures

DEP Form #	62-737.900(2)
Form Title	Mercury Recovery and Mercury Reclamation Facility Permit Application Form
Effective Date	May 20, 1998

Department of Environmental Protection

Mercury-Containing Lamp and Device Mercury Recovery and Mercury Reclamation Facility Permit Application Form and Instructions

TABLE OF CONTENTS

	page
General Instructions	
Who Must File	2
How to File	2
Types of Permits	2
Modification, Renewal and Transfer of Permits	3
Completion of the Application	5
Specific Instructions	5
Part I Application and General Permitting Requirements	5
Part II Certification	6
Confidential Information	6
Line-By-Line Instructions for Completing Part I	6
A. General Information	6
B. Site Information	7
C. Land Use Information	8
D. Operating Information	8
Operational Plan	9
Contingency Plan	9
Worker Health and Safety Plan	9
Quality Control Plan	9
Closure Plan	9
Uses of materials	10
Inspection Plan	10
Part I - Application Form For a Facility Permit	11-18
Part II - Certification Forms	19-22

GENERAL INSTRUCTIONS TO APPLY FOR A MERCURY-CONTAINING LAMP OR DEVICE MERCURY RECOVERY OR MERCURY RECLAMATION FACILITY PERMIT

WHO MUST FILE

All persons who own or operate or who intend to construct a spent mercury-containing lamp (MCL) or mercury-containing device (MCD) mercury recovery or mercury reclamation facility (also referred to herein as "recycling facility") as defined in Chapter 62-737, Florida Administrative Code (F.A.C.), must apply for a facility permit, unless exempted in accordance with Rule 62-737.700, F.A.C. The format discussed herein and referenced in Rule 62-737.800, F.A.C., "Permit Application Requirements and General Permitting Standards for Mercury Recovery and Mercury Reclamation Facilities", must be used when filing for any type of MCL or MCD recycling facility permit. All applicants are encouraged to arrange for a pre-application conference with the Department before completing their permit application.

Any owner or operator who intends to renew or transfer an existing recycling facility permit must submit a completed application and other associated information. Some modifications of an existing recycling permit may require the submittal of a completed application and other associated information. Applicants are encouraged to arrange for a pre-application conference to discuss the modification, renewal or transfer application. See the MODIFICATION, RENEWAL AND TRANSFER OF PERMITS section of these instructions for detailed instructions.

HOW TO FILE

Send the completed permit application package with all attachments to the Department (DEP) District Office that serves the area where the storage or recycling facility is located. Provide a header with revision number, page number and date on each page of the application. DEP offices are located in Pensacola, Jacksonville, Orlando, Tampa, West Palm Beach, and Ft. Myers. A minimum of 4 copies are required. Include a Certification [DEP Form 62-737.900(2), Part II, F.A.C.] with original signatures with each copy of the application.

The Department will review and comment on the completeness of the application within 60 days of receipt of the application. If it is not complete, the Department will send the applicant a Notice of Deficiency (NOD) within the prescribed time and will ask the applicant to send additional information or correct apparent errors or omissions. The applicant must send four (4) certified copies with the additional information within the time specified in the NOD. Again, include a Certification [DEP Form 62-737.900(2), Part II] with each copy. Provide a header with the revision number, page number and date on each page of the additional information so that it can be put into the application in the proper place.

TYPES OF PERMITS

Mercury Recovery Facility Permit

Rules 62-737.800 and 62-737.840, F.A.C., describe the permitting requirements for this type of facility. The application fee for an operation permit is $2,000.00. **Send the application fee with the completed permit application** to construct and operate a new mercury recovery facility or to modify an existing facility.

Complete the following to apply for a facility operation permit:

A) General Facility Information
B) Site Information
C) Land Use Information
D) Operating Information
E) Owner and Operator certification forms
F) Land Owner and P.E. forms

Mercury Reclamation Facility Permit

Rules 62-737.800 and 62-737.860, F.A.C., describe the permitting requirements for this type of facility. The application fee for an operation permit is $2,000.00. **Send the application fee with the completed permit application** to construct and operate a new mercury reclamation facility or to modify an existing facility.

Complete the following to apply for a facility operation permit:

A) General Facility Information
B) Site Information
C) Land Use Information
D) Operating Information 1 through 12
E) Owner and Operator certification forms
F) Land Owner and P.E. forms

MODIFICATION, RENEWAL AND TRANSFER OF PERMITS

Facility operators are advised to contact the appropriate District Office prior to modification, renewal or transfer of permits to discuss the modification, renewal or transfer application and procedures. Information contained in documents previously submitted to the Department in support of a permit which is still valid and which information is not to be modified need not be resubmitted when completing the application for a modification, renewal or transfer. However, such information must be accurately referenced to the effective dates of the existing document(s) or parts of the existing document(s), e.g., closure plan submitted in support of an existing permit.

MODIFICATION OF PERMIT

Before making any modification to a mercury recovery or a mercury reclamation facility, the owner or operator shall submit to the Department a completed Permit Application Form and Instructions, DEP Form 62-737.900(2). Facility owners and operators are advised to contact the appropriate District Officefor guidance as to whether a change would be considered a modification or simply routine maintenance which does not require submittals or fees (see "Types of Modifications and Fees" below). The engineering aspects of the application must be certified by a Professional Engineer.

After notice, and administrative hearing if requested by the permittee or a substantially affected party, the Department may require the permittee to conform to new or additional conditions upon a showing of good cause. Per F.A.C. Rule 62-739.290, good cause shall include, but not be limited to, the following:

1. The standards or rules on which the permit was based have been changed by amendment or judicial decision after the permit was issued;
2. The Department has received information which was not available at the time of permit issuance and would have justified different permit conditions;
3. There are alterations in the facility after permit issuance which justify different permit conditions but do not require a construction permit; or
4. The causes set forth in 40 CFR Sections 270.41 and 270.42.

When a permit is to be modified only the conditions subject to modification are opened. All other aspects of the permit shall remain in effect. Upon a written request by the permittee submitted on a completed Permit Application Form and Instructions, DEP Form 62-737.900(2), and submittal of the appropriate permit modification fee, the Department shall grant or deny modifications to the permit.

Types of Modifications and Fees. Facility operators are advised to contact the appropriate District Office for guidance on how to determine which type of modification and fee, if any, applies before submitting the required application and information. Modifications may be substantial modifications or minor modifications. Routine maintenance is not considered to be a modification.

1. Substantial Modifications. Pursuant to paragraphs 62-4.050(6) and (7), F.A.C., a substantial modification means a modification which is reasonably expected to lead to substantially different environmental impacts which require a detailed review. For the purposes of establishing fees for modifications, substantial modifications are further delineated in 62-4.050(k)17.a.-c., F.A.C. These modifications shall be accompanied by public notice as required in section 62-730.220(9)(c) and (d) and are subject to the following fee schedule:

a. Substantial modifications requiring extensive technical evaluation by the Department (62-4.050(k)17.a., F.A.C.) Same Fee as New Application

b. Substantial modifications requiring moderate technical evaluation by the Department (62-4.050(k)17.b., F.A.C.) $1,000

c. Moderate modifications requiring moderate technical evaluation by the Department (62-4.050(k)17.c., F.A.C.) $500

2. Minor Modifications. Pursuant to Rule 62-4.050(4)(r), F.A.C., a minor modification means a modification that does not require substantial technical evaluation by the Department, does not require a new site inspection by the Department, and will not lead to substantially different environmental impacts or will lessen the impacts of the original permit. Minor modifications do not require public notice.

$100

3. Routine Maintenance. Changes at a facility which involve routine maintenance, such as repair of equipment, replacement of equipment with similar equipment, aesthetic changes, or minor operational changes are not considered modifications, do not have to be reported to the Department, and require no fee. Facility operators are advised to contact the appropriate District Office for guidance as to whether a change would be considered routine maintenance.

RENEWAL OF PERMIT

The owner or operator must apply for a renewal of the permit at least 180 days before the expiration of a facility operating permit. If there are no changes to the facility plan, its operation, or regulatory changes that affect its operation, then the owner or operator must submit:

1. A letter stating that no changes are to be made which would require modification of the permit or a proposal for modification;

2. A completed Permit Application Form and Instructions, DEP Form 62-737.900(2); and

3. The permit application fee. If there are any changes to the facility plan, its operation, or regulatory changes that affect its operation, then the owner or operator must submit a completed Permit Application Form and Instructions, DEP Form 62-737.900(2) and the permit application fee.

TRANSFER OF PERMIT

Permits may be transferred by the current owner or operator (transferring permittee) to a new owner or operator (proposed permittee) only upon Department approval. Application for transfer shall be made by the transferring permittee at least 90 days before the effective date of the transfer. If there are no changes to the facility plan, its operation, or regulatory changes that affect its operation, then the transferring permittee must submit:

1. A demonstration that the proposed permittee meets the financial responsibility requirements adopted in Section 62-737.800(4)(g) and 62-737.800(14), F.A.C..;
2. A letter stating that no changes are to be made which would require modification of the permit or a proposal for modification;
3. A completed Permit Application Form and Instructions, DEP Form 62-737.900(2).; and
4. A $50 permit transfer fee.

If there are any changes to the facility plan, its operation, or regulatory changes that affect its operation, then the transferring permittee must submit a completed Permit Application Form and Instructions, DEP Form 62-737.900(2), and the permit application fee in instead of the letter, application and permit transfer fee required above when there are no changes.

The transferring permittee shall comply with the requirements of Section 62 737.800(g), F.A.C. until the proposed permittee has demonstrated compliance with that section. The transferring permittee shall also comply with subsection 403.722(13), Florida Statutes, which specifies certain other requirements.

COMPLETION OF THE APPLICATION

Type or print the application. Answer all questions in the applicable parts. Provide a header with revision number, date, and page number on each page of the application. Mark any questions that are not applicable "N/A." Type, print or sketch all necessary attachments on 8 1/2" x 11" paper (except for any required maps or scale drawings). Clearly present the attachments with the appropriate part of the application in a standard 3-ring or D-ring binder. Use the **exact format** as presented in these Permit Application Instructions which is required in Chapter 62-737 F.A.C. Incomplete applications will delay the permit process and could affect the continued operation of existing facilities.

SPECIFIC INSTRUCTIONS TO APPLY FOR A RECYCLING FACILITY PERMIT

A MCL or MCD Mercury Recovery or Mercury Reclamation (recycling) facility permit application consists of two parts:

PART I - Application and General Permitting Requirements

These requirements are found in Rules 62-737.800 through 62-737.860, F.A.C., and contain general information on the facility, use, operation, emergency response, quality control and closure requirements. The information requested in this part is applicable to all types of MCL or MCD recycling facilities. Submit this part at the earlier of: (1) sixty days after the date Chapter 62-737,

F.A.C., is effective or (2) prior to operation for new facilities constructed after Chapter 62-737, F.A.C., is effective.

PART II - Certification

This part contains the facility operator's, facility owner's, land owner's, and professional engineer's certification of the application and all attachments as required in Rule 62.737.800, F.A.C. Include a new certification with **original signatures** with each copy of each new submittal.

Confidential Information

Information submitted to the Department relating to secret processes, methods of manufacture or production, or confidential records may be claimed by the applicant to be of a confidential nature. Claims of confidentiality must be submitted as described in 403.73 and 403.11, Florida Statutes.

LINE-BY-LINE INSTRUCTIONS FOR COMPLETING PART I OF THE APPLICATION FOR A MCL OR MCD MERCURY RECOVERY OR MERCURY RECLAMATION FACILITY PERMIT

A. General Information

1. Enter an "X" in the appropriate blocks for each type of facility and operational unit for which the applicant is filing a permit application.

2. Enter an "X" in the appropriate block for the type of permit application.

3. Enter the revision number. (The initial application revision number is 0.)

4. Enter the date operation began or the proposed date of the start of operation.

5. Enter the full legal name of the facility.

6. Enter the facility's EPA identification number. If you do not have an identification number, attach EPA Form 8700-12 "Notification of Hazardous Waste Activity" to the application.

7. Enter the location or street address of the facility. If the facility lacks a street name or route number, give the most accurate alternative geographic information.

8. Enter the complete mailing address of the facility.

9. Enter the name, title, mailing address and telephone number of an employee who is thoroughly familiar with the operation of the facility and who the Department can contact about the application.

10. Enter the full legal name of the operator if different from number 9.

11. Enter the full mailing address of the operator if different from number 8.

12. If the facility owner and operator are not the same person, enter the name and telephone number of the owner.

13. If applicable, enter the mailing address of the facility owner.

14. Enter an "X" in the appropriate block to indicate the facility's legal structure.

15. If applicable, enter the name of the county and state.

16. If applicable, enter the state of incorporation.

17. If applicable, provide the name and mailing address of all owners.

18. Enter an "X" in the appropriate block, and provide other appropriate information relating to site ownership.

19. Provide the name of the professional engineer who will certify the application along with the registration number and address. If the engineer is associated with a firm, provide the firm's name.

20. Enter an "X" in the appropriate block indicating whether the facility is on Indian land.

21. Provide the type, agency, permit number, date issued, and expiration date of all existing federal, state, and local environmental permits currently held by the facility. If issuance of an environmental permit is pending, indicate the agency and type of permit applied for. If necessary, list additional permit information on a separate sheet of paper.

B. Site Information

1. Enter the county name and the nearest community to the facility. Provide the latitude and longitude, and section, township and range to the approximate geographic center of the facility. Take this information from the most recent USGS topographic map available. Also provide the Universal Transverse Mercator Grid number (UTM #). This is a 15 digit number in the following format: 00/000000/0000000. The first 2 digits are the zone number, the middle 6 digits are the easting and the final 7 digits are the northing.

2. Enter the area in acres of the facility site. A facility site includes all contiguous land and structures, other appurtenances, and improvements on the land used for recycling operations.

3. Attach a topographic map of the area extending one mile beyond the property boundaries of the facility site. The map should have a 1 inch to 2000 feet scale and show the following:

   a. Map scale and date
   b. 100-year flood plain area
   c. Orientation of the map
   d. Surface water bodies within 1/4 mile of the facility property boundary (e.g., intermittent streams and springs)
   e. Surrounding land uses
   f. Legal boundaries of the facility and a map or diagram showing:

   (1) Access control (fences, gates)
   (2) Buildings and other structures (recreational areas; access and internal roads; storm, sanitary and process sewerage systems; fire control facilities; etc.)
   (3) Loading and unloading areas
   (4) Drainage or flood control barriers
   (5) Hazardous material clean-up areas

(6) Runoff control system
(7) Outside storage area if any

4. Enter an “X” in the appropriate block. As specified in paragraph 62-737.800(3)(b), F.A.C., a facility cannot be located in a 100-year flood plain unless the applicant can provide reasonable assurances that the facility will be constructed to prevent flooding. If your facility is located in a 100-year flood plain, describe how the facility will be constructed to prevent flooding.

C. Land Use Information

1. Enter the present zoning of the site.

2. In those cases where a zoning change is needed, identify the zoning required.

3. Enter the present land use of the site (e.g., agricultural, commercial, residential, industrial, recreational).

D. Operating Information

1. Enter an "X" in the appropriate block. List, in descending order of significance by volume, the types, EPA hazardous waste codes and the amounts of hazardous waste generated annually at the facility.

2. Attach a description of the facility operation including a general description of the facility, the nature of the business, and the activities that it intends to conduct, and the anticipated number and type of employees.

3. Describe the material introduced into the processing equipment or operation and its unit of measure and indicate the maximum daily processing capacity in units for the process used at the facility for one 24-hour day. Show calculations which illustrate the annual capacity of the facility. This shall be demonstrated by manufacturers certification or actual calculations as demonstrated from use of the equipment or process.

Example

PROCESS	DAILY DESIGN CAPACITY	UNIT OF MEASURE	ANNUAL QUANTITY
Storage	5,000	fluorescent lamps	500,000
Mercury recovery	24,000	fluorescent lamps	6,000.000
Mercury recovery	2,000	HID lamps	200,000

4. Indicate the type of material, either processed or unprocessed, which shall be stored at thefacility either prior to processing or after processing prior to shipment off site. Indicate the total or maximum amount of each material described which will be present at the facility at any time during the facility operation.

Example:

Fluorescent lamps	10,000 units
Mercury-containing devices	2,000 units (with approximate unit weight under 1 pound)
Separated glass from recovery operations	100 tons
Recovered mercury	200 pounds

5. Attach a copy of the Operational Plan which is a detailed technical description of the process or operation which is proposed. This shall contain engineering plans as necessary. The description should indicate flow of material from receipt through processing and to ultimate destinations of the processed materials. Plans are to include operation, release control and pollution control equipment and measures to minimize employee exposure to hazardous materials. A map or drawing of the facility shall be included which outlines operational areas, storage areas and other active portions of the facility. Data shall be provided which shall demonstrate that the process or equipment employed can remove mercury from the processed material as indicated in 62-737.840 and 62-737.860 F.A.C.

6. Attach a copy of the facility's Contingency Plan conforming to the requirements of 40 CFR 264 Subpart D. This plan shall address the facility's methods to prevent and control releases of hazardous material to the environment. It must also address its plans or methods used in dealing with emergencies such as releases, fires, explosions or floods. The telephone number of the facility's 24-hour emergency coordinator shall be included.

7. Attach a copy of the facility's Worker Health and Safety Plan including training. This shall include measures which the facility shall take to conform to the requirements of Chapter 62-737, F.A.C., to 29 CFR 1910.1200, and 1910.120 and a copy of the facility's hazard communication program.

8. Attach a copy of the facility's Quality Control Plan. This plan shall define how the facility will monitor or evaluate the operational conditions and the facility's conformance to requirements specified in Operating Information 5 through 9. This is to include checklists, logs, or other elements which are required to monitor conformance to Chapter 62-737, F.A.C. Any chemical analyses which are required by Chapter 62-737, F.A.C., should also be specified in the Quality Control Plan approved in accordance with Chapter 62-160, F.A.C. Per paragraph 62-160.300(6), F.A.C., Department written Standard Operating Procedures (SOPs) Manuals)or equivalent procedures in a Department Approved Comprehensive Quality Assurance Plan for sampling and analysis) shall be used for sampling and analysis. the Department has written “Quality Assurance Standard Operating Procedures for Sampling at Facilities Permitted Under Chapter 62-737, F.A.C., November 14, 1997 Revision” for use by mercury recovery and mercury reclamation facilities permitted under Chapter 62-737, F.A.C.

9. Attach a copy of the facility's Closure Plan. This plan must be of adequate detail to describe how the owner or operator shall remove and properly manage all processed, unprocessed and waste material which may be at the facility when the facility is closed. This shall include decontamination of any process areas and equipment. Per paragraph 62-160.300(6), F.A.C., Department written Standard Operating Procedures (SOPs) Manuals)or equivalent procedures in a Department Approved Comprehensive Quality Assurance Plan for sampling and analysis) shall be used for sampling and analysis. the Department has written “Quality Assurance Standard Operating Procedures for Sampling at Facilities Permitted Under Chapter 62-737, F.A.C., November 14, 1997 Revision” for use by mercury recovery and mercury reclamation facilities permitted under Chapter 62-737, F.A.C. A detailed

itemization of the costs and times associated with closure must be included. Closure costs must assume a worst case condition for either voluntary or involuntary closure of the facility. Include the financial mechanism which will be used to provide financial assurance to the Department in the amount required by the closure cost estimates provided. Financial assurance information must be submitted on one of the forms specified in 62-737.800(4), F.A.C.

10. Attach copies of the Facility's certificate of insurance showing coverage in the required amounts specified in 62-737.800, F.A.C.

11. Attach a list and description of the facilities to which you will ship processed or unprocessed material off site. Describe the processes which will be employed by these facilities in utilizing these materials. This shall include processed glass and metal end caps, phosphor powder or reclaimed mercury destined for recycling or disposal. For mercury recovery facility applications, identify the mercury reclamation facility which accepts your material for recovery of the mercury. If this is an out of state facility, include the facility's certification that it can recover 99% of the mercury introduced into its reclamation process as required in 62-737.840(4), F.A.C.

12. Attach a copy of the facility's Inspection Plan. This plan shall include the measures the facility shall take to monitor and inspect the performance of process operations and release or pollution control equipment. Indicate the methods and frequency of these inspections and the types of logs or records which shall be maintained.

APPLICATION FOR A MERCURY-CONTAINING LAMP OR DEVICE MERCURY RECOVERY OR MERCURY RECLAMATION FACILITY PERMIT

Part I

TO BE COMPLETED BY ALL APPLICANTS

Please Type or Print

A. General Information

1. Type of facility:

Mercury Recovery	**[✔]**	**Mercury Reclamation**	**[ ]**
Lamps	[✔]	Lamps	[ ]
Devices	[✔]	Devices	[ ]
		Other mercury wastes	[ ]
		Commodity grade mercury	[ ]

2. Type of application: [ ] new construction [✔] operation [ ] modification [ ] transfer

3. Revision Number: 0

4. Date current operation began (or is expected to begin): 7/6/2012

5. Facility name: Lighting Resources, LLC

6. EPA/DEP ID. No.: FLR 000 070 565

7. Facility location or street address: 1007 SW 16th Lane, Ocala, FL 34471

8. Facility mailing address:

1007 SW 16th Lane	Ocala	FL	34471
Street or PO. Box	City	State	Zip

9. Contact person: Buff Fritz Telephone: (352) 509-3001

Title: Branch Manager

Mailing Address:

1007 SW 16th Lane	Ocala	FL	34471
Street or PO. Box	City	State	Zip

10. Operator's name: Lighting Resources, LLC Telephone: (352) 509-3001

11. Operator's address:

Name: Lighting Resources, LLC

Address:

1007 SW 16th Lane	Ocala	FL	34471
Street or PO. Box	City	State	Zip

12. Facility owner's name: Lighting Resources, LLC Telephone: (805) 624-3050

13. Facility owner's address:

1919 Williams Street, #350	Simi Valley	CA	93065
Street or PO. Box	City	State	Zip

14. Legal structure: [ ] Corporation [ ] Non-profit Corporation [ ] Partnership [ ] Individual
[ ] Local Government [ ] State Government [ ] Federal Government [✔] Other (specify)

15. If an individual, partnership, or business is operating under an assumed name, specify the county and state where the name is registered.

County:_____ State:_____

16. If the legal structure is a corporation, indicate the state of incorporation.

State of incorporation: Limited Liability Company, California

17. If the legal structure is an individual or partnership, list the owners' names and mailing addresses.

Name:_____

Address:

_____
Street or PO. Box City State Zip

Name:_____

Address:

_____
Street or PO. Box City State Zip

Name:_____

Address:

_____
Street or PO. Box City State Zip

Name:_____

Address:

_____

Street or PO. Box City State Zip

18. Site ownership status: [✔] owned [ ] to be purchased [ ] to be leased_____years

[ ] presently leased; the expiration date of the lease is:_____

If leased, indicate:

Land owner's name:_____

Land owner's address:

Name:_____

Address:

_____

Street or PO. Box City State Zip

19. Name of professional engineer: Eric Kramer, P.E.

Registration no.: 49462

Address:

Name: Eric Kramer

Address:

1228 Winter Garden Vineland Winter Garden Florida 34787

Street or PO. Box City State Zip

Associated with: APTIM Environmental & Infrastructure, LLC

20. Facility located on Indian land: [ ] yes [✔] no

21. Existing or pending environmental permits: (attach a separate sheet if necessary)

TYPE OF PERMIT	AGENCY	PERMIT NUMBER	DATE ISSUED	EXPIRATION DATE
WATER	DEP	FLRNEF39901	12/23/2021	12/22/2026
AIR	DEP	0830171-003-AG	10/17/2021	10/17/2026
HWT	DEP	FLR000070565	8/12/2021	11/30/2022
LQHUW	DEP	FLR000070565	3/1/2021	3/1/2022
8700-12	DEP	FLR000070565	10/11/2012	N/A

B. Site Information

1. Facility location : County: Marion Nearest Community: Ocala

   Latitude: 29.172371 Longitude: -82.146767

   Section: 19 Township: 15 South Range: 22 East

   UTM # 17R / 388478E / 3227606N

2. Area of facility site (acres): approximately 1.33

3. Attach a topographic map of the facility area and a scale drawing and photographs of the facility showing the location of all past, present, and future material receiving, storage and processing areas. Also show the incoming and outgoing material traffic pattern including estimated volume and controls.

4. Is the site located in a 100-year flood plain? [ ] yes [✔] no
   If yes, describe how facility will be constructed to prevent flooding (labeled as **Attachment** ___).

C. Land Use Information

1. Present zoning of the site. Light Industrial (See Eng Rpt: Sec 2, Figure 3)

2. If a zoning change is needed, what should the new zoning be?

   N/A

3. Present land use of site

   Mercury Recovery Facility

D. Operating Information

1. Is hazardous waste generated on site? [✔] yes [ ] no

List the types and anticipated annual amounts of generation (attach a separate sheet if necessary).

A. Hazardous Waste Code #D009 Phosphor Powder containing Mercury

312 drums p/year x 750 lbs/drum = 234,000 = 117 tons per year

B. Hazardous Waste Code #D009 Air Filter Media containing

Mercury 3.17 tons per year

2. Attach a brief description of the facility operation, nature of the business, and activities.

The Facility is a Mercury Recovery Facility that accepts for processing mercury containing lamps (intact and crushed lamps). The Facility also accepts other universal wastes for transfer only to a reclamation or final destination facility.

3. Specify below each process used for storing or recycling of lamps or devices (including daily design capacities for recycling operations) at the facility, and annual quantities, to be stored or processed at the facility. (Attach a separate sheet if necessary)

PROCESS	DAILY DESIGN CAPACITY	UNIT OF MEASURE	ANNUAL QUANTITY
MCL Recovery	90,000 lamps	90,000 x 312	28.08M

4. Indicate the type of material and total amount of maximum desired storage to be permitted by the facility. This is the maximum amount of raw or unprocessed material, such as lamps or devices, and the total types and amounts of processed material, such as glass or phosphor material, which shall exist at the facility at any time. This shall be the maximum allowed storage by the facility. (attach a separate sheet if necessary)

See page 16 (2 of 2)

5. Attach a description of how the facility shall be constructed and operated and the specifics of the technology which shall be utilized to process or recycle lamps and devices. Include any engineering plans, calculations and other related information describing the process to include the design, installation and operation of any air pollution control equipment. All engineering plans and reports shall be signed and sealed by a professional engineer registered in the State of Florida. Describe the specific types of materials the facility shall accept for introduction into its process. (e.g. fluorescent lamps, electrical thermostats etc.)

Construction and Operation Plans are labeled as Attachment ER - Section 2

6. Attach a description of the facility's Contingency Plan for responding to and dealing with spills or releases of hazardous material to the environment during facility operation or any other emergency conditions. Include the name and 24-hour response telephone number of the facility emergency response coordinator, who is to be contacted in the event of an emergency. Plans should at a minimum conform to the requirements of 40 CFR 264, Subpart D. Attach a description of procedures, structures, or equipment used at the facility to:

   (1) Mitigate effects of equipment failure
   (2) Prevent hazards in unloading operations (e.g., ramps, special forklifts);
   (3) Prevent undue exposure of personnel to hazardous material (e.g., protective clothing);
   (4) Prevent releases to soil, water or the atmosphere; and

   Attach a description of the preparedness and prevention procedures including required equipment, testing and maintenance of equipment, access to communications or alarm system, required aisle space, and arrangements with local authorities. Procedures should at a minimum conform to the requirements of 40 CFR 264, Subpart C.

Contingency Plan is labeled as Attachment ER - Section 4

4.
MCLs Unprocessed 139,104 each or equivalent volume (126 pallets) *or* a combination of MCLs and Ewaste/retail ewaste for a total of 126 pallets.

PCB Light Ballasts: Two (2) 55-gallon drums or equivalent volume (.5 pallet)

Batteries: Forty-eight (48) 55-gallon drums or equivalent volume (12 pallets)

MCLs Processed/Broken: Fifty-six (56) 55-gallon drums or equivalent volume (14 pallets) *or* a combination of MCLs Processed/Broken and Ewaste/retail ewaste for a total of 14 pallets.

Phosphor Powder: Thirty-two (32) 55-gallon drums

MCD: Four (4) 55-gallon drums or equivalent volume (1 pallet)

Non-PCB Light Ballasts: Twenty-eight (28) 55-gallon drums or equivalent volume (7 pallets)

Clean Lamp Glass (Cullet): Four (4) roll offs x
<=30,000 = 60 Tons

Clean Lamp Metals: Sixty (60) 55-gallon drums or equivalent volume (15 pallets)

7. Attach a copy of the facility's Worker Health and Safety Plan including training. This plan shall be of sufficient detail to describe how workers will be informed of the hazards present in the workplace and how to protect them from exposure or injury from these conditions. The plan should contain elements to instruct employees in identification of hazards, releases, emergency response conditions and methods to prevent releases of hazardous material.

Worker Health and Safety Plan including training is labeled as Attachment ER - Section 5

8. Attach a copy of the facility's Quality Control Plan to be approved in accordance with Chapter 62-160, F.A.C. This plan should include detailed description of how the facility shall monitor the conformance to the facility's operational plan, training plan, its methods of determining compliance with permit conditions or Chapter 62-737, F.A.C., (e.g., material sampling and analysis) and the performance of its processing equipment or pollution control equipment (if applicable). The plan shall also contain the measures to monitor conformance with the facility's closure plan.

Quality Control plan to be labeled as Attachment ER - Section 6

9. Attach a copy of the facility's Closure Plan. This plan shall be of adequate detail as to describe how the facility shall properly remove all quantities of raw or unprocessed material and processed materials or wastes in the event of either voluntary or involuntary closure or cessation of operations. The plan must also include programs for clean up or decontamination of process equipment and process areas if applicable and any analytical testing which must be performed to determine the adequate removal of hazardous materials. The plan must also include the estimated costs involved in carrying out each aspect of the closure of the facility.

Attach the following information to meet the closure performance standard which requires removing all hazardous wastes and hazardous constituents and controlling, minimizing, or eliminating, to the extent necessary to protect human health and the environment, closure related releases of hazardous waste, hazardous constituents, leachate, contaminated run-off, or hazardous waste decomposition products to the soil, ground water, surface waters or to the atmosphere. The closure plan must include the following information:

a. A description of how the applicant will close the facility.

b. An estimate of the maximum inventory of unprocessed and processed materials and wastes on site at any one time over the active life of the facility and a detailed description of the methods to be used during closure. The methods may include methods for removing, transporting, treating, storing, recycling or disposing of all processed and unprocessed materials and all hazardous wastes. Identify the type(s) of the off site recycling or hazardous waste management units the applicant will use, if applicable;

c. A detailed description of the steps needed to remove or decontaminate all hazardous waste residues and contaminated containment system components, equipment, structures, and soils during closure. The steps include procedures for cleaning equipment and removing contaminated materials, methods for sampling and testing contaminated operational areas of the facility, and criteria for determining the extent of decontamination required to satisfy the closure plan standard;

d. A schedule for closure of each facility. The schedule must include, at a minimum, the total time required to close each facility and the time required for intervening closure activities which will allow tracking of the progress of final closure ; and

e. A detailed description of the costs of closure. Attach the most recent closure cost estimates for the facility and a copy of the financial mechanism used to establish financial assurance for closure of the facility. The financial information must be submitted using forms specified in 62-737.80-0(4), F.A.C.

Closure Plan is labeled as Attachment ER - Section 7

Financial Assurance Form is labeled as Attachment Appendix G

10. Attach a copy of the documents used to demonstrate both general and pollution liability insurance coverage of at least $1,000.000 as required in 62-737.800 F.A.C.. Proof of this coverage must be provided to the Department on an annual basis

Certificate of Insurance is labeled Attachment Appendix H

11. Attach a list of the destinations and uses of processed material shipped off site for disposal or recycling. This is to include the markets for recycled glass or metal end caps or the recovered mercury from reclamation operations. For mercury recovery facility applications, identify the mercury reclamation facility which accepts your material for recovery of the mercury. Iif this is an out of state facility, include the facility's certification of compliance to the provisions identified in 62-737.840 (4), F.A.C.

List of Destinations Facilities and Uses labeled as Attachment ER - Section 3

12. Attach a copy of the facility's Inspection Plan. This plan shall include the measures the facility shall take to monitor and inspect the performance of process operations and pollution control equipment. Indicate the methods and frequency of these inspections and the types of logs or records which shall be maintained.

Inspection Plan is labeled as Attachment ER - Section 8

APPLICATION FOR A MERCURY-CONTAINING LAMP OR DEVICE MERCURY RECOVERY OR MERCURY RECLAMATION FACILITY PERMIT

Part II - CERTIFICATION

TO BE COMPLETED BY ALL APPLICANTS

Facility Name: Lighting Resources, LLC EPA ID# FLR 000 070 565

1. **Operator**

I certify under penalty of law that this document and all attachments were prepared under my direction or supervision in accordance with a system designed to assure that qualified personnel properly gathered and evaluated the information submitted. Based on my inquiry of the person or persons who manage the system, or those persons directly responsible for gathering the information, the information submitted is, to the best of my knowledge and belief, true, accurate, and complete. I am aware that there are significant penalties for submitting false information, including the possibility of fine and imprisonment for knowing violations. Further, I agree to comply with the provisions of Chapter 403, Florida Statutes, Chapter 62-737, F.A.C., and all rules and regulations of the Department of Environmental Protection. It is understood that the permit is only transferable in accordance with Chapter 62-737, F.A.C., and, if granted a permit, the Department of Environmental Protection will be notified prior to the sale or legal transfer of the permitted facility.

Susan Richard

Signature of the Operator or Authorized Representative*

Susan Richard, Chief Compliance Offricer

Name and Title (Please type or print)

Date: 12/31/2021 Telephone :(949) 300-7559

*** If authorized representative, attach letter of authorization.**

2. **Facility Owner**

This is to certify that I understand that this application is submitted for the purpose of obtaining a permit to construct, or operate a mercury-containing lamp or device mercury recovery or mercury reclamation facility . As owner of the facility, I understand fully that the facility operator and I are jointly responsible for compliance with the provisions of Chapter 403, Florida Statutes, Chapter 62-737, F.A.C. and all rules and regulations of the Department of Environmental Protection.

Susan Richard

Signature of the Facility Owner or Authorized Representative*

Susan Richard, Chief Compliance Offricer

Name and Title (Please type or print below signature)

Date: 12/31/2021 Telephone:(949) 300-7559

*** If authorized representative, attach a letter of authorization**

3. **Land Owner**

This is to certify that I, as land owner, understand that this application is submitted for the purpose of obtaining a permit to construct or operate a mercury-containing lamp or device mercury recovery or mercury reclamation facility on the property as described.

Susan Richard

Signature of the Land Owner or Authorized Representative*

Susan Richard, Chief Compliance Officer

Name and Title (Please type or print)

Date: 12/31/2021 Telephone:(949) 300-7559

*** If authorized representative, attach letter of authorization.**

4. **Professional Engineer Registered in Florida**

[Complete when not exempted by Chapter 62-737, F.A.C.]

This is to certify that the engineering features of this mercury-containing lamp or device mercury recovery or mercury reclamation facility have been designed and examined by me and found to conform to engineering principles applicable to such facilities. In my professional judgment, this facility, when properly constructed, maintained and operated, or closed, will comply with all applicable statutes of the State of Florida and rules of the Department of Environmental Protection.

Signature

Eric Kramer, P.E.
Name (please type)

Florida Registration Number: 49462

Mailing Address: 1228 Winter Garden Vineland
Street or PO. Box

Winter Garden FL
City State Zip

Date: 1/8/22 Telephone(407) 287-3216

[PLEASE AFFIX SEAL]

1/8/22

This item has been digitally signed and sealed by Eric K. Kramer, P.E. on the date adjacent to the seal. Printed copies of this document are not considered signed and sealed and the signature must be certified on any electronic copies.

Corporate Offices:
1919 Williams Street, Suite 350
Simi Valley, CA 93065
805-624-3050

December 31, 2021

Florida Department of Environmental Protection

RE: Letter of Authorization

Lighting Resources, LLC, as Operator of the Facility, Facility Owner, and Land Owner, hereby appoints Susan Richard, Chief Compliance Officer of Lighting Resources, LLC to be an Authorized Representative to act on our behalf with respect to the Florida Permit Renewal of our existing permit under FLR000070565.

Sincerely,

Daniel P. Gillespie
President
Dan.gillespie@lightingresourcesinc.com

1007 SW 16TH LANE
OCALA, FLORIDA

MERCURY RECOVERY FACILITY
FLR000070565
FL-DEP RENEWAL APPLICATION

REVISION NO. 0

JANUARY 2022

ENGINEERING REPORT
TABLE OF CONTENTS

1.0 INTRODUCTION AND GENERAL INFORMATION 1
1.1 Company Background 1
1.2 Facility Overview 1
1.3 General Facility Information 2
1.4 Other Facility Permits 2
1.5 Organization of Application 3

2.0 FACILITY SITE AND SURROUNDING AREA INFORMATION 5
2.1 Site Location and Historical Background 5
2.2 Site and Surrounding Area Zoning and Land Use 5
2.3 Surface Waters and Site Drainage 8
2.4 100-Year Floodplains 9
2.5 Site Conditions 13
2.6 Facility Building Layout 13
2.7 Site Parking and Security 18

3.0 OPERATING PLAN 19
3.1 Overview of Facility Operations 19
3.2 Facility Hours of Operation 20
3.3 Facility Access and Site Security 20
3.4 Facility Personnel Requirements and Training 21
3.5 Site Layout and Facility Building 26
3.6 Site Traffic Flow 26
3.7 Material Flow 26
3.8 Waste Acceptance Procedures 26
3.9 Waste Rejection Procedures 28
3.10 Lamp and Universal Waste Handling and Containerization 29
3.11 Final Destination of Materials 30
3.12 Processing Throughput and Staging/Storage Volumes 31
3.13 Load Checking Program 34
3.14 Material Receiving, Tracking, and Recordkeeping Procedures 35
3.15 Facility Operating Records and Records Retention 36
3.16 Mercury-Containing Lamp Description 37
3.17 Lamp Processing Equipment and Operation 37
3.18 Analytical Testing of Processed Lamp Components 42
3.19 Phosphor Powder / Mercury Vapor Capture and Air Pollution Control 42
3.20 Air Monitoring and Air Emission Control 43
3.21 Sampling and Analytical Testing of Processed Lamp Materials 45
3.22 Inspection and Maintenance Program 46

4.0 EMERGENCY PROCEDURES AND HAZARDOUS WASTE CONTINGENCY PLAN 47
4.1 Emergency Responsibilities of Emergency Coordinators 47
4.2 Emergency Contact Information 47
4.3 Regulatory Agencies Contact Information 48
4.4 Emergency Equipment 49
4.5 Medical Emergency Procedures 50
4.6 Fire and Explosion Emergency Procedures 51
4.7 Mercury (or other Hazardous) Spill / Release Emergency Procedures 52

5.0 WORKER HEALTH AND SAFETY PLAN 55
5.1 Fire Prevention and Control Procedures 55
5.2 Lockout / Tagout Procedures 56
5.3 Equipment Safety 57
5.4 General Safety Procedures 58
5.5 Air Monitoring 58
5.6 Personnel Training 59

6.0 QUALITY CONTROL PLAN 62
6.1 Operating Practices and Procedures 62
6.2 Facility Inspections 63
6.3 Waste Identification Procedures 63
6.4 Sampling and Analysis Procedures 64
6.5 Air Monitoring and Emission Control Procedures 65

7.0 CLOSURE PLAN 66
7.1 Closure Procedures 66
7.2 Maximum Inventory Estimate 66
7.3 Decontamination Procedures 67
7.4 Closure Schedule 69
7.5 Closure Cost Estimate 70
7.6 Financial Assurance Mechanism 76
7.7 Closure Certification 76

8.0 INSPECTION PLAN 76

DRAWINGS 81

D1 - Site Plat of Survey
D2 - Site Plan
D3 - Building Layout
D4 - Lamp Process Equipment Plan View
D5 - Site Traffic
D6 - Material Flow Diagram
D7 - Facility Emergency and Evacuation Plan

APPENDICES 89

Appendix A - Other Facility Permits
Appendix B - Facility Photos
Appendix C - Equipment / Manufacturer Specifications
Appendix D - Record-keeping Forms (e.g., material information, inspection, training, etc.)
Appendix E - Sampling and Analysis Standard Operating Procedures
Appendix F - Closure Costs, Support Information
Appendix G - Financial Assurance Form
Appendix H - Certificate of Insurance

1.0 INTRODUCTION AND GENERAL INFORMATION

This Report and attached Appendices constitute a Florida Department of Environmental Protection (DEP) Permit Application for a Mercury Recovery Facility located at 1007 SW 16th Lane, in Ocala, (Marion County) Florida, owned and operated by Lighting Resources, LLC. This Application has been prepared to meet applicable federal and state regulatory requirements including but not limited to Rules contained within Chapter 62-737 F.A.C. (*The Management of Spent Mercury-Containing Lamps and Devices Destined for Recycling*).

1.1 Company Background

Lighting Resources, LLC (Lighting Resources) was originally established in March 1990 as a corporation in the State of California and was later converted to a Limited Liability Company in January 2005 in the State of California. Lighting Resources has been providing environmentally safe and reliable, cost-effective recycling solutions for waste fluorescent lamps, ballasts, batteries, e-waste and mercury devices for over 30 years. Lighting Resources currently has facilities located in Arizona, California, Indiana, Tennessee, Texas, and Florida (Ocala).

1.2 Facility Overview

The Mercury Recovery Facility (Facility) is located on a 1.33-acre parcel of land and consists of a 16,539 square foot, steel and masonry building, with loading areas located along the east side of the building, asphalt paved parking areas to the south and east of the building, and a paved ingress / egress located at the south edge of the property off of SW 16th Lane. The Facility building has an administrative office located at the south end (just north of the site entrance), an unprocessed material and supply storage room / area located immediately behind (north of) the administrative office, a lamp processing room / area located at the far northwest end of the building, and a processed material and supply storage room /area in the far northeast end of the building. Material receiving (unloading) and transfer (load-out) docks are located along the east side of the Facility building.

The Facility accepts mercury containing fluorescent lamps, high intensity discharge lamps, and other types of spent lamps, including incandescent and LEDs, (MCLs), mercury containing devices (MCDs), ballasts (PCB and Non-PCB), and batteries. MCLs are processed and separated into the following materials: glass, metal end caps / metal components, and mercury-containing phosphor powder. The processed and separated glass and metal materials passing TCLP (Toxicity Characteristics Leaching Procedure) for mercury (i.e., below the USEPA toxicity of 0.2 mg/l) have commercial value and are sold or reused when possible. The mercury-containing phosphor powder and MCDs are transferred by a licensed hazardous waste hauler to a permitted mercury reclamation facility for processing and recovery of the mercury content of these materials. PCB Ballast materials are transferred by a licensed hazardous waste hauler to a permitted ballast recycling facility for processing and recovery of any recyclable materials and incineration of PCB containing materials. Non-PCB Ballast materials are transferred to a recycling facility for processing and recovery of recyclable materials. Batteries are sorted by type and sent to an authorized

battery recycling facility. Batteries to be accepted may include the following:

- Automotive / large equipment lead acid type batteries, EV batteries, etc.
- Small type batteries, including, but not limited to:
  - Alkaline
  - Gel cells
  - Lead acid
  - Lithium ion
  - Lithium
  - Magnesium
  - Mercury
  - Ni-Cad
  - Ni-MH
  - Silver oxide
  - Zinc

Material handling / processing activities take place within the Facility building. Materials received at the Facility are sorted / processed, consolidated, and loaded into outbound transfer trailer vehicles for transport to a licensed / permitted facility authorized to receive such materials.

1.3 General Facility Information

General information for the Lighting Resources Facility (located in Ocala, Florida) as required by Title 40 § 270.14(b) (1), follows:

- Company Name: Lighting Resources, LLC
- Corporate Address: 1919 Williams St, Suite 350, Simi Valley, CA 93065
- Corporate Telephone Number: (805) 624-3050
- Facility Address: 1007 SW 16th Lane, Ocala FL 34471
- Facility Telephone Number: (352) 509-3001
- Facility Facsimile Number: (352) 509-3012
- Facility EPA / DEP Identification Number: FLR 000 070 565
- Facility Contact: Buff Fritz, Branch Manager

1.4 Other Facility Permits

Lighting Resources, LLC has the following permits or registrations:

- DEP Division of Air Management, General Permit – #0830171-003-AG expires October 17, 2026.
- Florida Hazardous Waste Transporter Approval Certificate of Approval – #FLR000070565 expires November 30, 2022.
- DEP Large Quantity Handler Facility for Universal Waste Lamps and Devices Registration – #FLR000070565 registered through March 1, 2022.
- DEP No Exposure Certification for Exclusion from NPDES Stormwater Permitting - #FLRNEF39901 - Expires 12/22/2026

Please refer to **Appendix A** for copies of the above referenced documents.

1.5 Organization of Application

This Application has been prepared to address the information and issues required for a DEP Mercury Recovery Facility Permit. This Application has been organized into the following eleven (11) tab sections:

- DEP Application Form # 62-737.900(2)
- Engineering Report
- Drawings
- Appendix A - Other Facility Permits
- Appendix B - Photographic Logs
- Appendix C - Equipment / Manufacturer Specifications
- Appendix D - Recordkeeping Forms (e.g., material tracking, inspection, training, etc.)
- Appendix E - Sampling and Analysis Standard Operating Procedures
- Appendix F - Closure Costs Backup Data
- Appendix G - Financial Assurance Form
- Appendix H - Certificate of Insurance

Further details on the organization of this Application is presented on **Table 1-1** on the following page; specifically, providing the sections of the Engineering Report and Drawings and/or Appendices that correspond to the specified questions within the DEP Application Form (# 62-737.900(2)).

Table 1-1
Lighting Resources, LLC - Mercury Recovery Facility, Ocala, FL
Organization of Application

Tab Name	Corresponding Part / Question Number(s) In DEP Application Form No. 62-737.900(2)				
	Part I - Information				Part II
	General "A"	Site "B"	Land Use "C"	Operating "D"	
DEP Application Form # 62-737.900(2)	A.1 thru A.20	B.1 thru B.2	C.1 thru C.3	D.1 thru D.3	ALL
Engineering Report:					
Section 1.0 – Introduction and General Information	A.21			D.2	
Section 2.0 – Facility Site and Surrounding Area Information (contains Figs 1- 6, below)		B.1 thru B.4	C.1 thru C.3		
Figure 1 – USGS Topographic Map		B.1, B.3			
Figure 2 – Site and Surrounding Area on Aerial Photo		B.3	C.3		
Figure 3 – Zoning Map			C.1		
Figure 4 – Location of Surface Waters		B.3, B.4			
Figure 5 – Flood Insurance Rate Map		B.4			
Figure 6 – Site Plan on Aerial Photo		B.3			
Section 3.0 – Operating Plan				D.1 thru D.5, D.11	
Figure 7 – Air Monitoring Locations				D.5, D.7, D.8	
Section 4.0 – Emergency Procedures and Hazardous Waste Contingency Plan				D.6	
Section 5.0 – Worker Health and Safety Plan				D.7	
Section 6.0 – Quality Control Plan				D.8	
Section 7.0 – Closure Plan				D.9, D.11	
Section 8.0 – Inspection Plan				D.12	
Drawings:					
D1 – Site Plat of Survey		B.3			
D2 – Site Plan		B.3		D.5	
D3 – Building Layout		B.3		D.1, D.5	
D4 – Lamp Process Equipment Plan View				D.5	
D5 – Site Traffic		B.3		D.5	
D6 – Material Flow Diagram		B.3		D.5	
D7 – Facility Emergency and Evacuation Plan				D.5 thru D.8	
Appendix A: Other Facility Permits	A.21				
Appendix B: Photographic Logs		B.3	C.3		
Appendix C: Equipment / Manufacturer Specifications				D.5	
Appendix D: Recordkeeping Forms				D5. thru D.8	
Appendix E: Sampling and Analysis SOP				D.5, D.9	
Appendix F: Closure Costs Backup Data				D.9	
Appendix G: Financial Assurance Form				D.9.e	
Appendix H: Certificate of Insurance				D.10	

2.0 FACILITY SITE AND SURROUNDING AREA INFORMATION

The following paragraphs provide a description of the Lighting Resources, LLC existing site property, its historical use, and its current zoning and land use of site and surrounding properties.

2.1 Site Location and Historical Background

The Facility Site property is located in an industrial park at 1007 16th SW Lane, in Ocala, Florida (Marion County). The subject property was originally developed in 1978 with a single warehouse building and was owned / occupied by Nation Distributors — a distributor of alcoholic beverages, until the mid-1980s. From the mid to late 1980s, Handling Systems Engineering, Inc. — a conveyor systems wholesaler occupied the property. Following the departure of Handling Systems Engineering, the property remained vacant until 1991. In 1991 an addition to the original structure was constructed at the northern portion of the original structure. The property was occupied by Van-Mor Enterprises, a motor vehicle wholesaler and builder, from 1999 until 2007. The current office area, located at the south end of the structure, was added in 2004. Mr. Todd Warriner purchased the property in 2007. The building and property remained vacant except for intermittent use as a gymnasium for a volleyball league from 2007 until purchased by Lighting Resources, LLC in December 2010.

The Site location is presented on a USGS topographic quadrangle map and an aerial photo map on **Figures 1** and **2**, respectively, on the following pages.

2.2 Site and Surrounding Area Zoning and Land Use

The subject Site is located in the Ocala Industrial Park and has a current zoning designation of “M-1” – Light Industrial. Properties located immediately adjacent to the Site are also zoned M-1 and have the following uses:

Adjacent Uses:

- North: immediately north is a railroad spur, and north of the railroad spur is a paint shop (Bi Pass Paint Shop) and vacant property owned by the City of Ocala
- South: immediately south is SW 16th Lane and the SW 17th Place viaduct, and south of the two roads is American Freight Furniture Mattress and a number of vacant buildings / properties of unknown use
- West: immediately west is a chiropractic business (“Fakhoury Medical Chiropractic)
- East: immediately east is property owned by the Florida Department of Transportation that appears to be vacant, and a public storage facility (“American Self Storage”)

FIGURE 1: Site Location on USGS Topographic Map

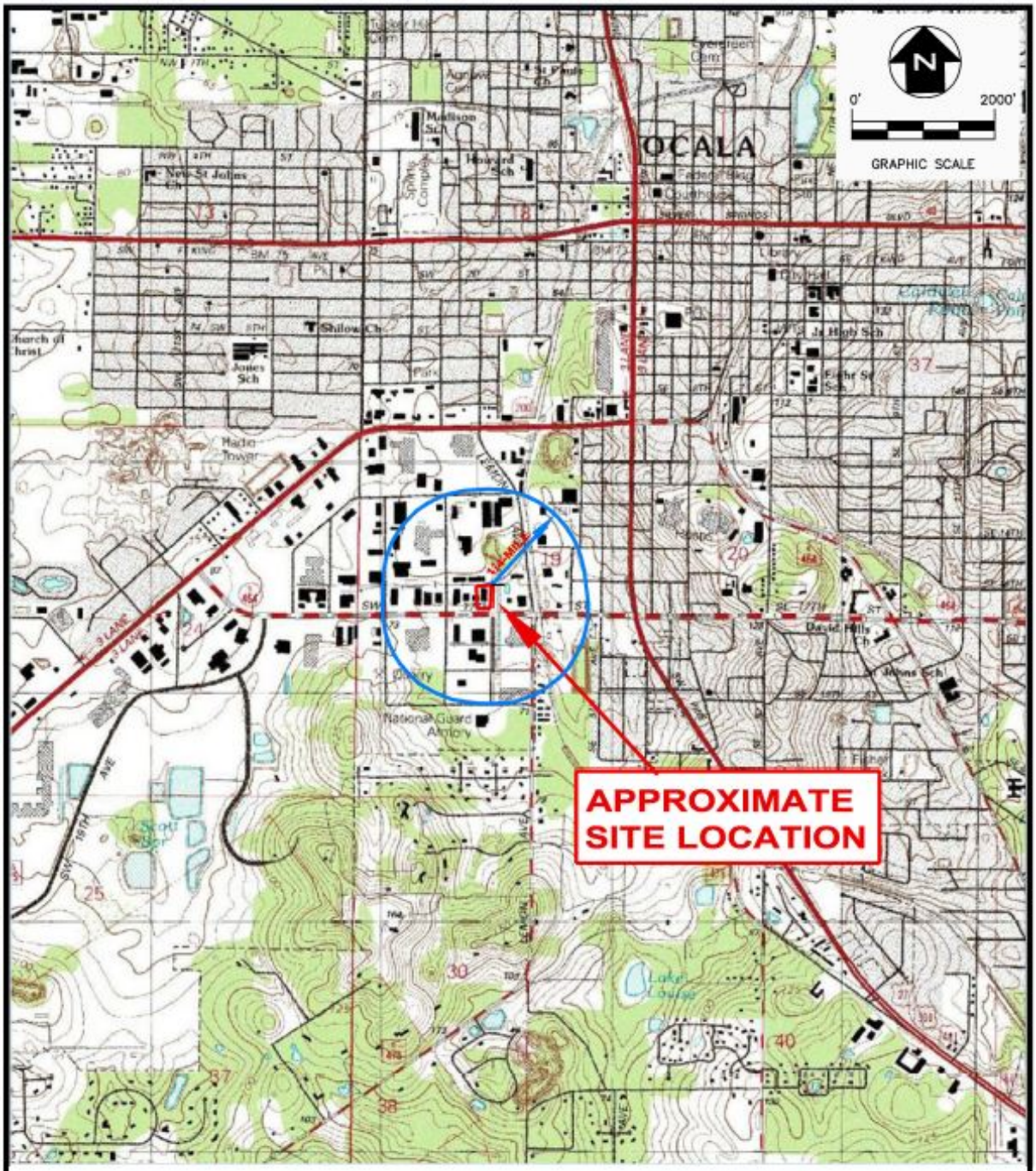

SOURCE:

U.S. GEOLOGICAL SURVEY 7.5 MINUTE TOPOGRAPHIC QUADRANGLE MAP "OCALA WEST, FL" DATED 1991.

Lighting Resources LLC

LIGHTING RESOURCES, LLC - OCALA, FL MERCURY RECOVERY FACILITY		
FIGURE 1 SITE LOCATION ON USGS TOPOGRAPHIC MAP		
APPROVED BY: PCT	PROJ. NO.: 143925	DATE: DEC. 2011

FIGURE 2: Site Location and Surrounding Areas Shown on Aerial Photograph

SOURCE:
AERIAL PHOTOGRAPH OBTAINED FROM GOOGLE EARTH, IMAGERY DATED 1/13/2011.

Lighting Resources LLC

LIGHTING RESOURCES, LLC - OCALA, FL
MERCURY RECOVERY FACILITY

FIGURE 2
SITE LOCATION AND SURROUNDING AREAS SHOWN ON AERIAL PHOTOGRAPH

APPROVED BY: PCT	PROJ. NO.: 143925	DATE: DEC. 2011

The zoning designations of the surrounding area properties located within ¼-mile of the site are as follow:

Surrounding Zoning:

- North, Northwest, and West: "M-1" - Light Industrial.
- Northeast: "M-1" - Light Industrial, and "M-2" -Medium Industrial
- East and Southeast: "M-1" - Light Industrial, "M-3" - Heavy Industrial, and "B-1A" - Limited Neighborhood Business
- South and Southwest: "M-1" Light Industrial, and "M-2" - Medium Industrial

The nearest residential use area is located over 2,000-feet south from the Facility frontage road SW 16th Lane / SW 17th Place. The Site and surrounding area zoning are presented on **Figure 3** (on page 11).

2.3 Surface Waters and Site Drainage

Based on a review of the USGS topographic map dated 1991 (as shown on **Figure 1**), the nearest surface water appears to be a small creek that runs immediately east of and parallel to the Site's eastern boundary. The creek appears to begin on the property immediately east and adjacent to the Site, and terminate on the property that is immediately south and adjacent to SW 16th Lane / SW 17th Street. Based on a review of aerial photo imagery dated January 2011, the same area occupied by the creek appears to be covered in vegetation.

The next nearest surface water bodies located with respect to the subject Site (ranging in distances from 140-feet to 3,500-feet) are as follows:

- East-Northeast: a square-shaped area with vegetative growth (see **Figure 2**) located approximately 140-feet east to northeast of the Site, that may serve as a storm water detention basin. The USGS map (dated 1991) presented on **Figure 1** shows this area with standing water; however, the aerial photograph (dated 2011) presented on **Figure 2**, shows only vegetation
- East: a surface water impoundment associated with the business "Cemex Construction Materials" is located approximately 650-feet east of the Site, immediately east of SW 7th Road
- Southeast: a surface water impoundment associated with the business "Rinker Materials" is located approximately 1,100-feet southeast of the Site, immediately south of SW 17th Place and east of SW 7th Road
- Southwest: two surface water bodies are located over 3,500-feet southwest of the Site — both appear to be man-made storm water retention ponds associated with residential developments

Based on a review of topographic elevations of the Site and immediate surrounding areas from survey data presented on the Marion County Geographic Information Systems website, surface waters from the subject site appear to generally drain to the south and to the east — specifically, into roadside drainage ditches that run parallel to SW 16th Lane and SW 7th Road, respectively.

The Mercury Recovery Facility operations are limited to inside the Facility building, and therefore there is no contamination from the Facility commingling with surface water runoff nor is there a threat of contamination entering the adjacent creek (located east of the Site). The locations of the surface water bodies as described above are presented on **Figure 1** (on page 9) and on **Figure 4** (on page 14).

The Facility building is serviced by a connection to the local municipal sewer system. Specifically, wastewater from toilets / restrooms (within the building) drains into a connecting pipe that runs beneath the building and out to the municipal sewer interceptor line beneath the frontage road (south of Facility building). There are no floor drains within the Facility building nor is there a septic system on site. There is a drainage grate located immediately outside of the building in the loading dock area. In the unlikely event of a spill, liquid would drain through this grate into a catch basin / holding area for testing prior to removal from site. The catch basin has a sump pump to remove liquids.

2.4 100-Year Floodplains

Based on a review of the most recent Flood Insurance Rate Map ("FIRM" - Map No. 12083C0517D, dated August 2008) published by the Federal Emergency Management Agency, the subject Site is not located in the 100-year floodplain. As shown on **Figure 5** (presented on page 15), a portion of the Site has a flood zone designation of "X" which corresponds to areas outside the 100-year floodplains.

FIGURE 3: Site Area Zoning Map

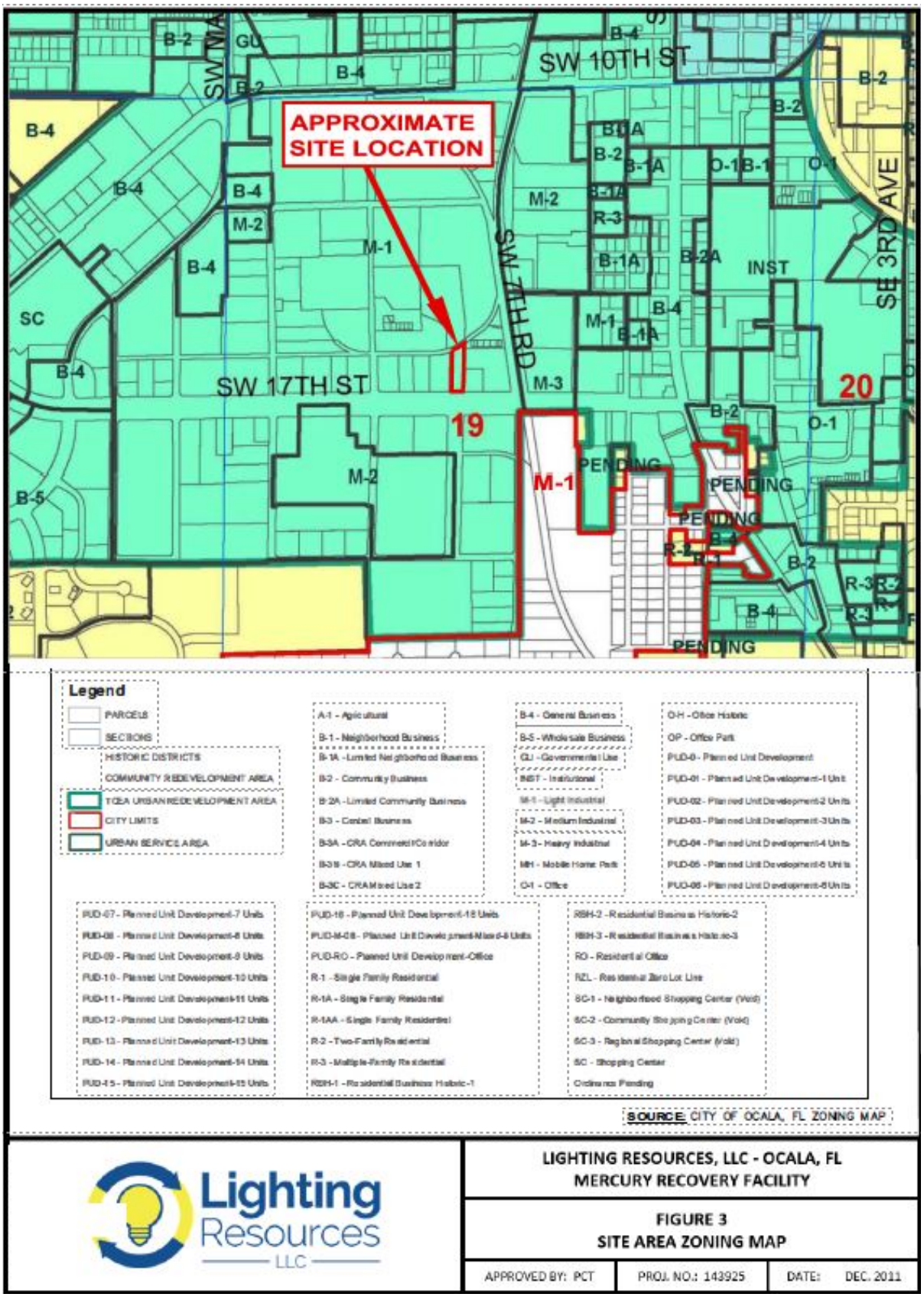

FIGURE 4: Location of Surface Waters

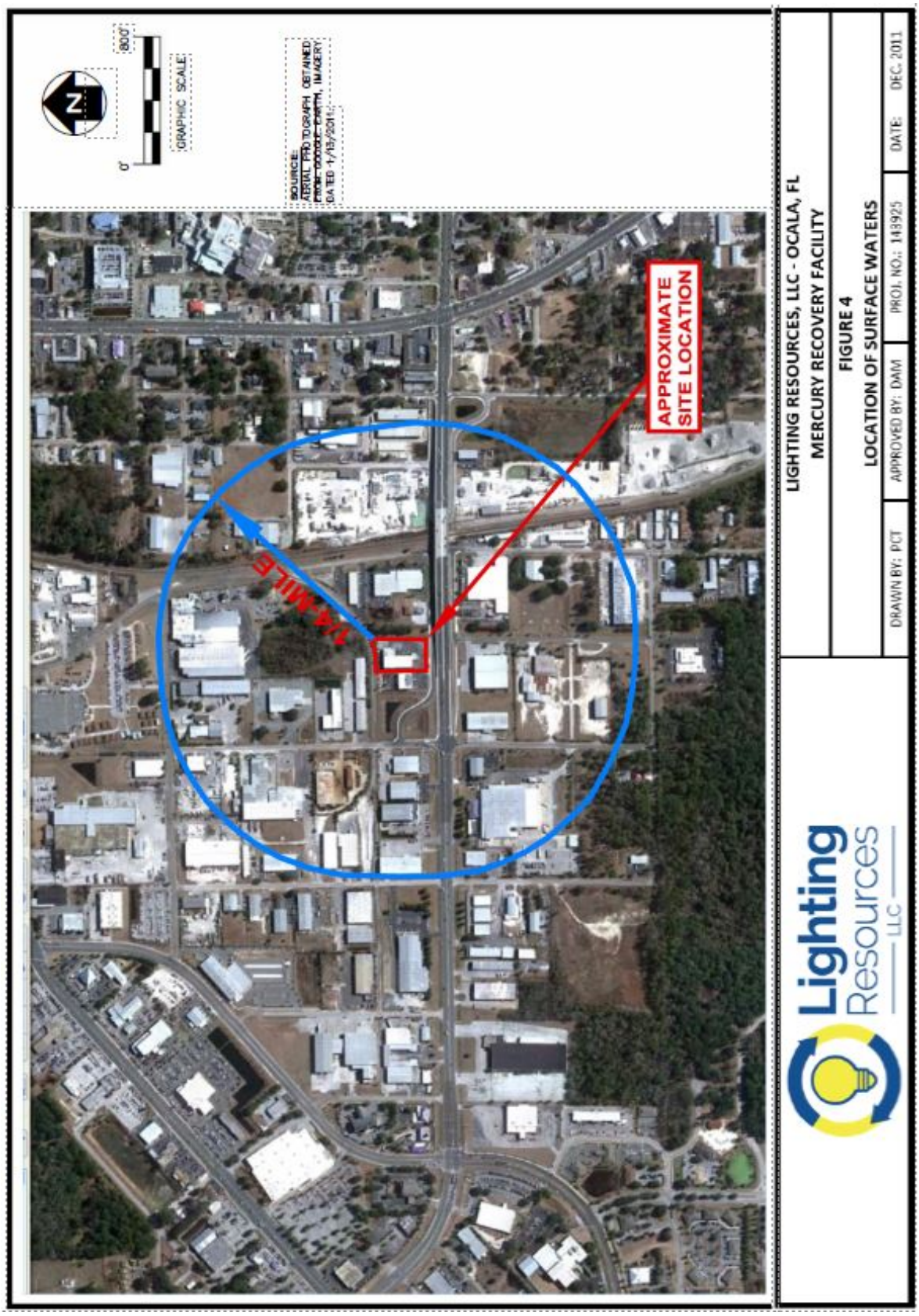

FIGURE 5: Flood Insurance Rate Map

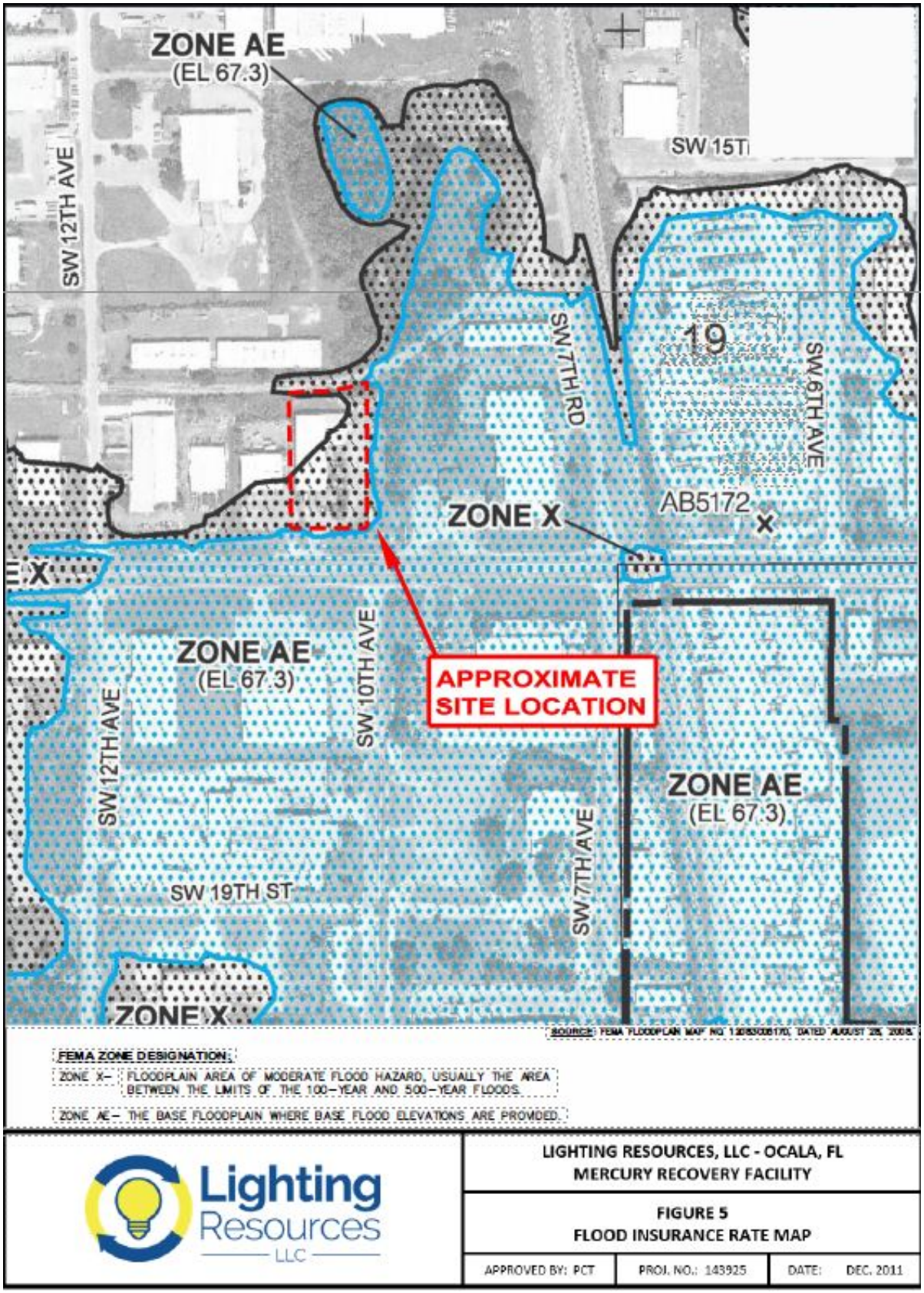

2.5 Site Conditions

The Facility property consists of approximately 1.33 acres of land having the following constructed features:

- A 16,539 square foot building constructed of masonry and sheet steel, comprising approximately 28.5% of the site
- Asphalt paved parking areas / surfaces located along the east side of the property (east of the building), and along the south / front area of the property, comprising approximately 45% of the site
- Concrete paved loading ramps located along the east side of the building, comprising less than 3% of the site property
- Unpaved / vegetated areas along the site frontage, east and west sides, and rear (north side), comprising less than 25% of the site property

The site has a security fence with a locking gate to prohibit unauthorized access to the material receiving, handling, and storage areas. The site plat of survey and site plan are presented on **Drawing Nos. D1** and **D2**, respectively (see tab section "**Drawings**"). A plan view of the site property shown on an aerial photograph is presented on **Figure 6** on page 17.

2.6 Facility Building Layout

The building is divided into the following four areas as shown on **Drawing No. D3** (contained in tab section "**Drawings**"):

- Administrative Offices – 1,532 square feet
- Area A: Material Receiving, Loadout, and Staging Room – 8,750 square feet
- Area B: Lamp Processing Room – 3,682 square feet
- Area C: Processed Glass and Supply Storage Room – 2,575 square feet

Photographic logs of the Facility building (inside and outside) are presented in **Appendix B**.

Administrative Offices

The Administrative Offices area is an addition that was added to the originally constructed building in 1991. This area is located on the south edge of the building and contains offices, reception area, restrooms, and a meeting/conference room (see **Photo Inset No. 1** to the right).

Photo Inset 1: Administrative Offices

FIGURE 6: Site Plan View on Aerial Photograph

Area A – Receiving, Loadout, and Staging Room

Area A is located immediately behind the Administrative Offices and is where inbound materials are received/staged, inventoried, and temporarily stored until processed and/or loaded out for transfer to an authorized and permitted reclamation facility or recycling facility. Area A has the following access points:

- South Wall Access Points: 1- overhead door (immediately west of the Administrative Offices, and 3-personnel doors. (1-door immediately west of the overhead door, and 2-doors east of the overhead door that are on the common walls shared by the Administrative Offices)
- North Wall Access Points: 1-overhead door and 1-personnel door on the common wall shared by the Lamp Processing Room
- East Wall Access Points: 3-overhead doors (doors are adjacent to concrete loading ramps, two are recessed below grade and the third is at grade under a canopy cover), and 1-personnel door

The Facility access points are illustrated on **Drawing Nos. 2** and **3** (contained in tab section "**Drawings**").

Area A: Flooring / Working Surface. The Area A floor has been resurfaced with concrete. Stress cracks have been filled using *Adhesives Technology Crackbond JF 311*; and the entire floor has been sealed with a protective epoxy using *Sherwin Williams Tile-Clad High Solids Coating* (see **Appendix C** for product specifications). Subsequent stress cracks are filled and sealed in a similar manner using the same or similar products.

Area A: Material Receiving / Loading Docks. A concrete ramp and two receiving / loading docks are located along the east wall of Area A, for receiving trucks / vehicles with unprocessed materials and for loadout of universal waste (i.e., Mercury Containing Devices and batteries) and mercury containing phosphor powder. Two overhead doors are located over the respective docks. The concrete ramp has a below grade, recessed landing area. To ensure that material / liquid does not run off from the ramp / dock area, a grate covered trench drain has been installed in the landing area (see **Photo Inset No. 2** to the right) with a 750-gallon sump / collection tank installed beneath to collect liquid (i.e., stormwater) for testing prior to discharge.

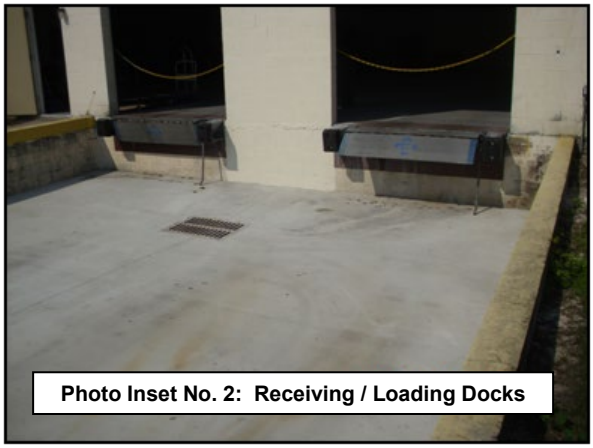

Photo Inset No. 2: Receiving / Loading Docks

Area A: Canopied Loading Area. A third overhead door is located just north of the receiving / loading dock area along the east edge of the building (see **Photo Inset No. 3** to the right) where a canopy extends from the building roofline east over a concrete paved surface for truck receiving or loadout operations — including moving processed metals from Area B into a dedicated trailer parked in the

Photo Inset No. 3: Canopied Loading Ramp

northeast corner of the site for later shipment offsite.

Area A: Other Overhead Doors. There are two additional overhead doors — one located on the north wall and one located on the south wall of Area A. The north wall overhead door is used to move the stored or staged lamps into Area B (the Lamp Processing Room) for processing; and the south wal overhead door is used to movestorec supplies from Area C into the southwest corner of Area A (see **Photo Inset Nos. 4** and **5** right/below and refer to **Drawing Nos. 2** and **3** (contained in tab section "**Drawings**").

Photo Inset No. 4: Area A - West Wall, Staging / Storage Areas, and Portion of North Wall (and Overhead Door)

Area A: Lamp Storage. Unprocessed materials are stored on pallets along the west wall of Area A. Pallets are oriented from west to east (starting from the west wall) in ten (10) rows — with each row measuring 50-inches in width by 30-feet in length, separated by 3-foot-wide aisles. Each row can accommodate seven pallets, which could be double stacked for a total of fourteen (14) standard 48-inch pallets. Rows 1 through 9 are dedicated to the storage of intact lamps, and Row 10 is dedicated to the storage of crushed lamps. Calculations are provided on the following page, demonstrating that Rows 1 through 9 provide storage for up to a maximum of 139,104 intact lamps, and Row 10 provides storage for up to a maximum of fifty-six (56) 55-gallon drums of crushed lamps double stacked.

Photo Inset No. 5: Area A - South Wall, South Overhead Door and Supply Storage

Rows 1 through 10 hold 140 pallets and are designated as storage of intact lamps and crushed/broken lamps, but may also be used to hold pallets of electronic waste (computers and peripherals), and/or retail return electronic waste (retail returns such as blood pressure cuffs, head phones, fans, and toys) along with all types of batteries in any space available.

Area A: Lamp Storage Calculation. The maximum number of intact and crushed lamps that can be stored for processing is presented the step-by-step calculation below:

Rows 1 through 9 -Intact Lamps: each row has seven (7) pallets which can be double stacked for 14 pallets, each pallet will hold sixteen (16) lamp boxes (ea. lamp box 12" x 12" x 48"), and each lamp box will hold sixty-nine (69) lamps; therefore, each pallet will accommodate the following number of lamps:

69 lamps x 16 boxes = 1,104 lamps per pallet

Each row will therefore accommodate the following number of lamps:

14 pallets x 1,104 lamps per pallet = 15,456

The total number of intact lamps that can be stored in **Rows 1 through 9** equals the following:

15,456 lamps per row x 9 rows of lamps = 139,104 Total Lamps

Note: *A total number of 140,000 lamps was conservatively used in the closure cost estimate (see* ***Table 7-3*** *in* ***Section 7*** *of this Report). The maximum storage of 139,104 lamps and the closure cost estimate number of 140,000, lamps both assume lamps are four (4)-foot T-12 fluorescent tube type lamps. This assumption was conservatively made because of the following: 1) the size of these lamps are generally larger than other type lamps including CFLs, and U-Tubes; 2) it simplified the effort to calculate lamp storage and closure costs; and 3) Storage space available for all types of lamps will control the total amount of lamps actually stored not the conservative estimate. (cfl, straight, etc.)*

Row 10 - Crushed Lamps: has seven (7) pallets per row which could be double stacked for 14 pallets. Each pallet will hold four (4) 55-gallon drums; therefore, the total number of drums that can be stored containing crushed lamps equals 56 per the following:

4 drums per pallet x 14 pallets = 56 drums of crushed lamps.

Area A: Receiving/Staging area: Materials staged for receiving are located either at the overhead doors on the east wall of Area A or in the area to the front of the Supply Rows or Storage Rows 1 through 10. While in these staging locations the material is opened for inspection, counting, waiting for labeling per warehouse procedures. Then the material is closed and shrink wrapped and labeled and placed in storage.

Area B - Lamp Processing Room

The Area B - Lamp Processing Room contains the *Balcan MP 8000 Lamp Processor* equipment and is the only area where processing of lamps occurs. A plan view of the Balcan process equipment is presented on **Drawing No. D4** (in tab section "**Drawings**").
The Lamp Processing Room floor has been resurfaced with concrete; stress cracks have been filled with *Adhesives Technology Crackbond JF 311*; and the entire floor sealed with two layers of Sherwin Williams Armor-Seal 650 SL/RC Self-Leveling/Re-Coatable Epoxy (see **Appendix C** for product specifications for the Balcan equipment and floor epoxies, adhesives, and sealants). The Lamp Processing Room has been completely insulated to R-19 value and air-conditioned for mercury vapor reduction and control purposes. The room is self-contained and sealed to retain and maximize the negative pressure environment created by the lamp

processing equipment. Drums of mercury laden phosphor powder are stored within the confines of the Lamp Processing Room along with Mercury Debris Accumulation drums.

Area C - Processed Glass and Supply Storage Room

The Processed Glass and Supply Storage Room serves as the repository for separated glass. It may also be used for general storage of boxes, containers and recyclable materials. The Processed Glass and Supply Storage Room has two overhead doors (designated north and south) located along the room's east exterior wall and one overhead door on the west wall (designated west overhead door) to access the processing room— the north and the south overhead doors are used to loadout trucks with separated glass material (refer to **Drawing No. D3** in tab section "**Drawings"**) and transfer supplies to Area A. Drawings D5 and D6 show the changes in the traffic routes and material handling. In each side of the room in front of the overhead doors, 20-yard roll offs are located to collect the separated glass material. Each side accommodates two 20-yard roll offs (4 total). The west overhead door is used to transfer the separated glass material to the roll offs from the processing room.

2.7 Site Parking and Security

The site has asphalt paved parking areas located immediately along the south frontage of the site and along the eastern portion of the site as shown in **Photo Inset No. 6** to the right. The following parking spaces are provided on site:

- Six (6) parking spaces located immediately south and adjacent to the Administrative Offices
- Six (6) parking spaces located immediately east and adjacent to the Administrative Offices
- Three (3) parking spaces located along the eastern edge of the south one-half of site

Photo Inset No. 6: Site Parking

The site has a security fence with a locking gate to prohibit unauthorized access to the material receiving, handling, and storage areas. The fencing follows along the western edge, eastern edge and northern edge of the Facility property. The fencing in the southern portion of the site runs from east to west immediately behind the Administrative Offices as shown to the right in **Photo Inset No. 7** and on the Site Plan Drawing presented on **Drawing No. D2** (in tab section "**Drawings**").

Photo Inset No. 7: Site Security Fence

3.0 OPERATING PLAN

The following operating plan addresses the proper procedures for the handling, processing, and transport operations for the Lighting Resources, LLC - Mercury Recovery Facility located in Ocala, Florida (Facility). The Facility operates in such a manner that is protective of public health, safety, and welfare. Further, the Facility operates in accordance with applicable federal and state rules and regulations, including but not limited to Rules contained within Chapter 62-737 of the Florida Administrative Code (F.A.C.) - *The Management of Spent Mercury-Containing Lamps and Devices Destined for Recycling*.

Material handling / processing activities takes place solely within the Facility building. Materials received at the Facility are sorted / processed, consolidated, and loaded into outbound transfer vehicles for transport to a licensed / permitted facility authorized to receive such materials.

Facility personnel are appropriately trained and supervised to comply with the contents of this operating plan prior to beginning duties. A copy of the operating plan is located within the Administrative Offices and will remain available for reference to ensure proper management of Facility operations.

3.1 Overview of Facility Operations

The Lighting Resources Facility is by DEP definition a *Mercury Recovery Facility* that accepts for processing (i.e., mercury recovery) both intact and crushed mercury containing lamps. Lighting Resources also accepts other universal wastes for transfer to a reclamation facility or other final destination facility (i.e., recycler, treatment, or disposal facility). Specifically, Lighting Resources Facility accepts the following mercury containing materials and universal wastes:

- Mercury Containing Lamps (MCLs) - fluorescent lamps, incandescent lamps, LED, and high intensity discharge (HID) lamps (intact and broken)
- Mercury Containing Devices (MCDs) - thermometers, thermostats, switches, relays and manometers, etc.
- Lighting Ballasts - PCB and Non-PCB ballasts
- Automotive / Large Equipment Lead Acid Type Batteries and EV Batteries
- Small Type Batteries*: (including but not limited to)*
    - Alkaline
    - Gel cells
    - Lead acid
    - Lithium ion
    - Lithium
    - Magnesium
    - Mercury
    - Ni-Cad
    - Ni-MH
    - Silver oxide
    - Zinc

Batteries are sorted by type, containerized in approved containers and accumulated in available rows to be sent to an authorized battery recycling facility.

Mercury Containing Lamps

Mercury Containing Lamps (MCLs) are processed on-site and separated into the following materials:

- Glass
- Metal end caps / metal components
- Mercury-containing phosphor powder

The processing equipment —specifically, removes from the separated glass and metal mercury containing phosphor powder to levels well below the hazardous waste limit for mercury of 0.2 mg/L. (Please refer to analytical test results for processed glass and metals provided in **Appendix C.**) Therefore, best efforts are made to recycle these materials. The mercury-containing phosphor powder is containerized in 55-gallon steel drums and transported offsite by a licensed hazardous waste hauler to a permitted mercury reclamation facility for processing and recovery of the mercury content of these materials.

Mercury Containing Devices

Mercury Containing Devices (MCDs) are received for transfer only to an authorized mercury reclamation facility. Specifically, upon receipt the MCDs are containerized in approved containers and later transferred offsite to a permitted / authorized mercury reclamation facility.

PCB and Non-PCB Ballasts

PCB Ballasts are received and transported offsite by a licensed hazardous waste hauler to a permitted facility authorized to receive / process PCB Ballasts.

Non-PCB Ballasts are placed in containers and transferred offsite for recycling.

Batteries

Upon receipt, batteries are sorted by type, placed in appropriate containers approved by LRL and transferred off site to a permitted / authorized battery processing / recycling facility.

3.2 Facility Hours of Operation

The Facility has regular business hours and may operate up to 3 shifts for processing in 24 hours.

3.3 Facility Access and Site Security

Facility access and site security will comply with the requirements of Title 40 CFR § 264, Subpart C and Title 40 CFR § 270. A description of procedures and site controls for limiting access, prohibiting unauthorized access, and for overall security is provided in the following paragraphs.

Security Procedures and Equipment

Facility security is maintained through employee presence at the property during working shifts and by locking or otherwise securing overhead and personnel access doors or other means of access when the Facility is not in operation. Ample exterior lighting is provided to allow visual observation of the Facility building and premises. Gates, vehicular and personnel access doors shall be closed when not in use and locked during non-duty hours. The Facility is located within the patrol and response areas of the City of Ocala Police Department.

24-Hour Surveillance System

The Facility will only be accessible to employees, or authorized persons accompanied by Facility personnel. Facility access will not be available when the plant is not in operation or unattended by authorized Facility personnel. The Facility is locked when not in operation. The Facility has an intrusion alarm system that is monitored during non-duty hours as appropriate.

Barriers and Controlled Entry

The active portion of the Facility, the container storage area and processing equipment room, are located interior to the building structure. The Facility building itself serves as a barrier to unauthorized access during both operating and non-operating periods.

Entry to the Facility is controlled by personnel in the Administrative Offices at the south end of the building / Facility. Visitors and contractors are required to report at the Administrative Offices and if granted access to the main areas of the building, they are accompanied/ escorted by authorized Facility staff. Employees are trained to report any unauthorized access / person(s) and to escort the unauthorized person(s) to the Administrative Offices.

Drivers, entering the Facility are directed to report to receiving personnel. Facility and vehicular gates and doors are locked during non-working hours.

Signs, legible from a distance of 25-feet, are posted on the interior of the building above the container storage area located along the west wall of the building. Signs are also located on the outside of the building at both personnel doors to the permitted area from the outside. These signs bear the following words: "Notice - Unauthorized Personnel Are Not Permitted Inside Plant" and "Notice – All Visitors Must Register At Office". The signs are in English and Spanish as they are the predominant languages of the area.

3.4 Facility Personnel Requirements and Training

Required training and responsibilities of Facility personnel varies depending on the assigned tasks associated with each position. Each new employee is trained in proper operational procedures, hazardous materials identification, personal protective equipment, and safety procedures in order to increase employee awareness of potential hazards associated with operations and to safeguard their well-being. Worker protection and safety is ensured through complying with standards and guidelines of the federal Occupational Safety and Health Administration (OSHA) worker safety regulations and with 62-737.800(4)(e)(1) F.A.C. Personnel are trained to be proficient in the following areas necessary for operation of the Facility:

- Safety Procedures
- Proper Use of Personal Protective Equipment (PPE)

- Load Checking, Screening, and Rejection Requirements
- Operating Procedures
- Fire Control
- First Aid
- Emergency Procedures
- General Housekeeping Procedures
- Equipment Operation and Maintenance
- Material Loading and Unloading Procedures and
- Site Security Procedures

Personnel Training

Facility personnel are trained in accordance with Title 40 CFR § 265.16. Personnel must successfully complete a program of both classroom instruction and on-the-job training that teaches them to perform their duties in a manner to comply with the requirements of Title 40 CFR § 265.16, and in such a way that:

- Ensures the safe operation of the processing equipment
- Ensures the Facility's compliance with its emergency response procedures
- Ensures the Facility's inspection methods are appropriate to identify and prevent releases to the environment

Facility personnel are informed of the following:

- Their possible exposure to hazardous substances in their work environment
- The contents of the Facility's health and safety plan

The operator ensures that the training program includes elements required under Title 40 CFR § 265.16.

The training program is directed by a person trained in hazardous waste management procedures, and includes instruction which teaches Facility personnel hazardous waste management procedures (including emergency response and contingency plans implementation) relevant to the positions in which they are employed. Further, the training program is designed to ensure Facility personnel are able to respond effectively to emergencies by familiarizing them with emergency procedures, emergency equipment, and emergency systems, including where applicable:

- Procedures for using, inspecting, repairing, and replacing facility emergency and monitoring equipment
- Key parameters for automatic material feed cut-off systems
- Communications systems
- Response to fires and/or explosions
- Response to spill / release incidents
- Shutdown of operations

Personnel training on the Facility's emergency response plan includes:

- Pre-emergency planning and coordination with outside parties

- Personnel roles, lines of authority, training, and communication
- Emergency recognition and prevention
- Safe distances and places of refuge
- Site security and control
- Evacuation routes and procedures
- Decontamination procedures
- Emergency medical treatment and first aid
- Emergency alerting and response procedures
- Critique of response and follow-up
- PPE and emergency equipment

Facility staff will receive the appropriate level of OSHA HAZWOPER training in accordance with OSHA regulations Title 29 CFR § 1910.120(p)(8) and § 1910.120(q).

Facility personnel are required to successfully complete the training program within six months after the date of their employment or assignment to the Facility, or to a newly assigned position at the Facility. Employees receiving training are required to work in supervised positions until they have successfully completed the training requirements. Further, Facility personnel are required to take part in continuing training including annual refreshers / review of their initial training.

The Facility operator maintains records of personnel and training at the Facility. These records will include:

- The job title for each Facility position, and the name of the employee filling each position
- A written job description for each position including the requisite skill, education, or other qualifications, and duties assigned to each position
- A written description of the type and amount of both introductory and continuing training that is given to each person filling a position
- Records that document that the training or job experience has been given to, and successfully completed by facility personnel
- Training records on current personnel are kept until closure of the Facility. Training records on former employees are kept for at least three years from the date the employee last worked at the Facility. Personnel training records may accompany personnel transferred within the same company

A summary of the personnel training is provided on the following page in **Table 3-1** (and also **Table 5-1**).

Table 3-1
Lighting Resources, LLC - Mercury Recovery Facility, Ocala, FL
Initial New Employee Training

Position Title (#)	Required Training
Part I – New Employee Orientation:	
All Staff	▪ Company policies and procedures ▪ Mercury Right to Know ▪ RCRA Training ▪ Pre-placement physical requirements ▪ Universal Waste Handler Training ▪ Plant tour: process and safety equipment ▪ U.S. DOT Hazardous Materials Training ▪ OSHA Hazard Communication ▪ Production tasks orientation ▪ Environmental and waste control ▪ Material handling tasks orientation
Part II – Title Specific Training:	
Facility Manager (1)	▪ 40-Hour HAZWOPER Training ▪ Air Monitoring ▪ Reasonable Suspicion Training ▪
Operations Manager (1)	▪ 40-Hour HAZWOPER Training ▪ Air Monitoring ▪ Reasonable Suspicion Training ▪ Forklift Certification ▪
Processing Supervisor (1)	▪ 40-Hour HAZWOPER Training ▪ Forklift Certification
Warehouse Supervisor (1)	▪ 40-Hour HAZWOPER Training ▪ Air Monitoring ▪ Forklift Certification
Logistics Coordinator (1)	▪ 24-Hour HAZWOPER Training ▪ Reasonable Suspicion Training
Office Administrator (1)	▪ 24-Hour HAZWOPER Training ▪ Reasonable Suspicion Training
Driver -CDL Class “A” (4)	▪ 24-Hour HAZWOPER Training ▪ HAZMAT Endorsement ▪
MCL / Lamp Processing Operators (2)	▪ 24-Hour HAZWOPER Training

Note: Personnel receive training on the appropriate use and types of personal protective equipment to be used at the Facility. Further, personnel are fit tested for respirator equipment.

After receiving training, the new employees are closely supervised during the first few months of working in the Facility (by experienced and senior employees) to ensure they understand proper procedures and protocol.

A detailed worker health and safety plan has been prepared and is presented in **Section 5** of this Report (*Worker Health and Safety Plan*). A summary of the Facility staff positions, job descriptions / responsibilities, reporting supervisors, and position requirements is presented below in **Table 3-2**.

Table 3-2
Lighting Resources, LLC - Mercury Recovery Facility, Ocala, FL
Facility Staffing Summary

Position Title (#)	Job Description / Responsibilities	Supervisor	Requirements
Facility Manager (1)	Responsible for maintaining Facility operations in accordance with the Operating Plan. Supervises overall Facility operations including worker health and safety, regulatory compliance, environmental controls, and personnel training.	Reports to Company President	College degree or equivalent work experience
Operations Manager (1)	Responsible for operational compliance with applicable regulations / requirements, Facility maintenance, schedules, and general recordkeeping.	Reports to Facility Manager	College degree or equivalent work experience
Processing Supervisor (1)	Oversees receiving and shipping production, equipment maintenance, and housekeeping.	Reports to Operations Manager	Min. H.S. diploma and 1-year experience at Lighting Resources Facility
Warehouse Supervisor (1)	Directly supervises unloading and inventory of incoming materials and loading of outbound material.	Reports to Operations Manager	Min. H.S. diploma and 6-months experience at Lighting Resources Facility
Logistics Coordinator (1)	Directly supervises facility drivers and is responsible for customer pickup / delivery services; driver USDOT compliance and training; truck / trailer maintenance / permitting; and scheduling of incoming / outgoing freight.	Reports directly to Facility Manager	Min. 2-years college or equivalent work experience and a min. 5 years of supervisory experience in related service industry
Office Administrator (1)	Handles invoicing, purchase orders, creates Certificates of Recycling, maintains facility operating records, billing issues	Reports directly to Facility Manager	Min. H.S. diploma and 6-months experience at Lighting Resources Facility
Driver -CDL Class "A" (4)	Performs over the road transportation; loading/unloading of materials using various equipment (e.g., forklift, dolly, etc.); maintains vehicle and vehicle safety checks; prepares bills of lading, manifests, logbook, trip reports; and sealing/ repacking of containers for material transport to meet DOT regulations.	Reports to Logistics Coordinator	Min. H.S. diploma or equivalent and min. 2-year successful, accident/incident-free commercial driving experience
Mercury Recovery Process Operator (4)	Performs production component separation of MCLs using the Balcan MP8000 equipment; performs maintenance on process equipment; unloads materials from trucks and containers as they arrive, sorts / stages materials according to category and size; and seals and replaces containers for transport.	Reports to Operations Manager / Shift Supervisor	Possesses manual dexterity, properly uses PPE, and ability to work with minimum supervision.

3.5 Site Layout and Facility Building

A detailed description of the Site and Facility building layout has been provided in the previous sections (**Sections 2.5**, **2.6**, and **2.7**). Plan drawings presenting the site plat of survey, site plan, and building layout are presented on **Drawing Nos. D1** through **D3**, respectively (in tab section "**Drawings**").

3.6 Site Traffic Flow

Site traffic enters the site at the Facility entrance located off of SW 16th Lane. Material handling trucks/vehicles (loaded and empty) are directed to proceed to the material receiving/loading docks located on the east side of the Facility building where they will either be inspected and unloaded, or are loaded out with materials for transfer off site. A site traffic flow diagram is presented on **Drawing No. D5** (contained in the tab section "**Drawings**").

3.7 Material Flow

Incoming materials are inspected and counted and labeled at the staging area in Area A. Lamps are moved to the lamp storage area within Area A for later processing. Batteries are staged for sorting and then stored along the north wall of Area A and later transferred off site. PCB Ballasts are staged along the east wall of Area A (between the dock overhead doors) for later transfer off site. Non-PCB Ballasts are staged and consolidated for transfer off site. Lamps are moved from the lamp staging or storage area into the Area B – Lamp Processing Room for processing. Processing sorts and segregates into dedicated containers for glass, metals, and phosphor powder. The processed glass is moved into Area C for tipping into roll offs and later transferred off site. The containers of processed metal are moved into a dedicated trailer for later transfer off site. The phosphor powder containers are staged in Area B along the south wall for later transfer off site. The mercury debris accumulation drums are staged Area B along the east wall for later transfer off site.

Outbound phosphor powder containers, battery containers, and ballast containers are loaded out through dock area in Area A. The outbound roll offs containing separated glass are loaded out either through the south or north overhead doors in Area C. The outbound processed metal containers are loaded out through the canopied load-out area located in Area A or the north or south overhead doors in Area C. A material flow diagram is presented on **Drawing No. D6** (in tab section "**Drawings**").

3.8 Waste Acceptance Procedures

Incoming materials (i.e., lamps and universal wastes) are inspected to ensure compliance with Lighting Resources' acceptable and permitted waste receiving policies and requirements that meet all applicable local, state, and federal rules and regulations. Accurate and up to date records are maintained for materials accepted, processed, and transferred.

Acceptable Waste

The Lighting Resources Facility accepts only the following wastes *for processing*:

- Intact lamps including mercury containing lamps, and other non-mercury containing lamps
- Broken or crushed mercury containing lamps and other broken lamps

The Facility also accepts the following universal and non-regulated wastes for transfer to an approved facility for either processing, treatment, recycling or disposal:

- Batteries
- Mercury containing devices (MCDs)
- Non-PCB lighting ballasts

Lighting Resources receives retail customer returns, electronic waste items and items containing leaded glass. Electronic waste items and customer retail returns received are separated and transferred to an approved facility authorized to process such wastes.

Prohibited Waste

The Lighting Resources Facility is prohibited from processing hazardous waste other than crushed or broken mercury containing lamps. Further, the Facility is prohibited from accepting the following wastes or materials:

- Radioactive Wastes
- Liquid Wastes
- Biological and Medical Wastes
- Municipal Solid Wastes
- Flammable Wastes
- Explosive Wastes
- Pyrophoric Wastes
- Ignitable Waste
- Reactive Waste
- Acute Hazardous Waste
- Toxic Waste
- Free Liquids or Leaking Containers

Any attempt to deliver the above materials is rejected by Lighting Resources. Waste rejection and load checking procedures are discussed further in **Section 3.9** and **Section 3.13**, respectively. Should material be discovered after receipt, the rejection procedures will be followed.

Material Receiving and Acceptance Procedures

Upon arrival of a shipment at the Lighting Resources Facility, the following sequence of events occurs:

- The driver presents the paperwork for the load to the shipping and receiving individual who is trained to receive material into the Facility.
- Facility personnel will compare shipping documents and material description against the material profiles of the material to be received.

- If the shipping documents conform to the material profile, the truck is unloaded by personnel qualified to operate a forklift and staged in the receiving / loading dock area (inside the Facility) for inspection.
- The containers are visually inspected to verify that the shipment contains only the waste material as described in the material profile and shipping document.
- Upon verification, the shipping documents are signed acknowledging receipt of the material at the Facility. EPA Form 8700-22 copies are distributed per EPA instructions and uploaded to RCRAInfo as required.
- Upon off-loading, each container is staged for counting and labeling. Upon completion the shipment is transferred to the appropriate storage location and logged in as received into the waste tracking system.
- Should Lighting Resources deny acceptance of the delivery, the shipment is returned to the generator or shipped to an alternate facility selected by the generator.

A comprehensive load checking program is implemented to ensure that no unauthorized wastes are accepted at the Facility. The load checking program is presented in a subsequent part of this section.

3.9 Waste Rejection Procedures

Wastes are rejected at the Lighting Resources Facility for the following reasons:

- The waste does not conform to the material profile documentation and the waste contains materials that the Facility is not permitted to accept.
- The delivery contains other wastes that cannot be accepted by Lighting Resources.
- An unscheduled delivery would cause Lighting Resources to exceed the permitted storage limit.

Upon discovery of the material that cannot be accepted at the Facility, the generator is contacted and notified that material is unacceptable, and therefore, rejected by Lighting Resources. The Facility will request direction from the generator as to whether the material is to be forwarded to an alternate facility that is authorized and permitted to receive such materials, or it is to be returned to the generator. Based on the instructions from the generator, the procedures listed below are used to document the rejected shipment.

- Material that is to be rejected is marked with a label noting the material as non-conforming, and will remain in the delivery vehicle, or if unloaded it is immediately reloaded into the delivery vehicle for offsite shipment either to the generator or to an alternate facility that is authorized and permitted to receive such materials.
- In the unlikely event, a non-conforming material is discovered after the material has been accepted by the Facility, the generator is immediately notified that the material is rejected, and arrangements are made for the generator to send a vehicle for pickup and delivery of materials to the generator, or to an alternate facility that is authorized and permitted to receive such materials. If arrangements cannot be made, Lighting Resources will arrange for the proper transport of the rejected materials to an authorized and permitted facility.
  Rejected loads are issued a load reject form with a new bill of lading or hazardous waste manifest form for use in shipping the material back to the generator or to an alternate approved facility (please refer to **Appendix D** for copies of forms).

Loads rejected are recorded onto the Load Reject Log form (refer to Appendix D). Forms and logs are maintained at the Facility available for DEP inspection.

Reject load forms and logs are maintained at the Facility and shall be made available for inspection. Facility forms including reject load forms and reject load logs are maintained at the Facility for a minimum period of three years.

3.10 Lamp and Universal Waste Handling and Containerization

Incoming materials are inspected prior to acceptance to ensure c**ompliance** with Lighting Resources' acceptable and permitted waste receiving policies and requirements. Materials are inventoried by either physical count or weight for intact fluorescent and other kinds of intact lamps, and mercury containing devices or by weight for crushed or broken lamps, ballast, and batteries.. Lamps are stored in the designated location within Area A until they can be processed. Lamps are processed onsite using the Balcan MP8000 lamp processing equipment (in the Area B – Lamp Processing Room) for component separation (i.e., glass, metals, and phosphor powder). Other materials received (e.g., ballasts, batteries, mercury containing devices) are segregated by type, if applicable, and containerized and stored in a designated area of Area A for later shipment offsite to an authorized facility for further processing, recycling, treatment, or disposal. A Material Flow diagram is presented on **Drawing No. D6**.

Containerization

Lamp materials are containerized and stored in the designated location within Area A for later processing. Intact lamps are containerized in lamp boxes or fiber drums or other approved container on pallets. Crushed lamps are containerized in U.S. DOT approved container and staged on pallets. Containers may be of varying dimensions and may contain lamps of different types, quantities, and dimensions. Each pallet holds containers stacked no higher than seven (7) feet, and the containers are secured with shrink-wrap, bands, or other binding after counting and labeling. If the pallet securing method impedes view of the marking/labeling of the containers, such labels/markings are provided on the exterior of the pallet packaging. The storage area will include double stacking of pallets. Refer to **Drawing No. D3** for the locations of the lamp storage areas.

<u>Approved Container Types</u>: U.S. DOT approved containers for shipping of lamps are used for the staging and/or storage of the MCLs. Intact lamps are stored in containers that are:

- Structurally sound
- Adequate to prevent breakage
- Compatible with the contents of the lamps

Crushed lamps are stored in 55-gallon drums, or other containers that meet U.S. DOT specifications for such wastes. Lamp containers may be used, new, or reconditioned so long as they are structurally sound, adequate to prevent breakage, and compatible with the contents of the lamps. A large variety of acceptable container types are available that meet these specifications and selection is often driven by the size, shape, and quantity of the lamps being shipped. Intact MCLs may be shipped in containers approved for the transport of the lamps as products. Crushed or broken MCLs are shipped in U.S. DOT containers approved and authorized for shipment of hazardous waste.

Pallets of lamps may be stacked one on one in the storage rows. The lower pallet should be structurally sound and adequate to prevent breakage. However, caution should be used to select appropriate lower-level pallets that will support a second level.

Container Markings / Labels: Product staged in the warehouse is labeled to indicate the type of waste (e.g., "Universal Waste Lamps"), the customer or generator and date received. The tracking log will contain the order number, date received, customer name and generator information as well as the quantity of waste. Containers used for phosphor powder are marked with a "Hazardous Waste" label as required by Title 40 CFR § 262.32(b) as an Environmentally Hazardous Solid (Mercury, D009). The phosphor powder is an on-site generated by-product of the lamp processing operation. The Lighting Resources Facility does not accept phosphor powder from other sources.

Container Handling Practices. Containers are moved by forklift from the receiving/staging area to the storage or process areas. The container storage area in Area A is located along the west wall inside the building, on a sealed concrete floor slab. Containers of universal wastes remain closed during storage except when adding or removing wastes, or conducting inventory, inspection, or sampling. The container storage area is routinely inspected to ensure that the containers remain in good condition, closed, and without evidence of leakage, spillage, or other conditions that could cause or allow leakage or releases of mercury or other hazardous constituents to the environment under reasonably foreseeable conditions.

3.11 Final Destination of Materials

With the exception of lamps, other universal wastes and processed lamp materials are transported offsite for further processing (i.e., reclamation, recycling, or treatment) or disposal. Facilities that these materials are sent to are appropriately registered, licensed, or permitted by the states of residence. Documentation of transport to these facilities is created and maintained at the Lighting Resources Facility for a minimum period of three years. The shipping documentation shall evidence the material destination of universal waste (metals and glass). The phosphor powder test results from retorting shall provide verification of mercury separation from phosphor powder. Further, a Certificate of Destruction shall be obtained with respect to PCB Ballasts. Such documentation shall be maintained at the Lighting Resources Facility for a minimum period of three years.

The final destination facilities to be used by the Lighting Resources Facility for the processed lamp and transferred universal waste materials are described below.

- Separated Lamp Glass (cullet): Lamp glass (glass cullet) is analytically tested by an approved laboratory for compliance with Chapter 62-737.840, F.A.C. prior to release from the Facility for recycling / reuse. Only lamp glass material (cullet) passing the TCLP for mercury (i.e., below the USEPA toxicity of 0.2 mg/l) is recycled. The material is transported offsite to a commercial user(s) (i.e., commercial sandblasting, cement filler, ceramic tile maker, etc.)In the event that there are no available glass markets, the material is transported to an authorized landfill for disposal (most likely Baseline Landfill in Marion County, Florida). Separated lamp glass material is shipped out as often needed. At a minimum weekly analytical testing is done on a composite of the daily samples of separated lamp glass (cullet) collected the prior week. *(Note, in the unlikely event that the processed lamp glass materials do not pass the TCLP for mercury, the glass would be shipped to an authorized and permitted mercury reclamation facility).*
- Separated Lamp Metals: are transported offsite to TOTALL Metal Recycling located in Granite City, Illinois for recycling of the metals (or to another approved metal recycling facility). Lamp metal scrap components are analytically tested by an approved laboratory for compliance with Chapter 62-737.840 F.A.C. prior to release from the

Facility for recycling / reuse. Only lamp metal materials passing the TCLP for mercury (i.e., below the USEPA toxicity of 0.2 mg/l) are recycled. Separated lamp metal materials are shipped out as often needed. At a minimum, weekly analytical testing is done on a composite of the daily samples of processed lamp metals collected the prior week. *(Note, in the unlikely event that the processed lamp metal materials do not pass the TCLP for mercury, the metals would be shipped to an authorized and permitted mercury reclamation facility).*

- Mercury Containing Phosphor Powder: is transported offsite for recovery of the mercury to the Lighting Resources' Mercury Reclamation Facility located in Greenwood, Indiana, or alternatively to the Veolia Environmental Services' Mercury Reclamation Facility located in Tallahassee, Florida or another approved mercury reclamation facility. Semi-annual testing documentation is obtained from the mercury reclamation facility documenting that 99% of the mercury was recovered. Such documentation is retained on-site for a minimum of three years.
- Mercury-Containing Devices (MCDs): are transported offsite for recovery of the mercury to the Lighting Resources' Mercury Reclamation Facility located in Greenwood, Indiana, or alternatively to the Veolia Environmental Services' Mercury Reclamation Facility located in Tallahassee, Florida or another approved mercury reclamation facility. Semi-annual testing documentation is obtained from the mercury reclamation facility documenting that 99% of the mercury was recovered. Such documentation shall be retained on-site for a minimum of three years.
- Batteries: are transported offsite for reclamation of metals or materials to Asset Recycling, Dalton, GA, or alternatively to either FAMCe, Cedartown, GA or Catalytic Innovations, Rolla, MO, or to another approved facility.
- Non-PCB Light Ballasts: are transported off site to FAMCe, Cedartown, GA or Industrial Surplus, Norcross, GA for recycling of metals or to another approved metal recycling facility.
- PCB Light Ballasts: are transported offsite to the Lighting Resources' Facility located in Phoenix, AZ, or alternatively to Wisconsin Ballast located in Muskego, WI for decommissioning / destruction of the PCBs and reclamation of metals or to another approved facility.
- Other Non-RCRA Regulated Recyclable Materials: are transported to facilities approved for recycling of those specific commodities (e.g., cardboard, scrap metals, electronic wastes, retail returns, etc.)

3.12 Processing Throughput and Staging/Storage Volumes

The Lighting Resources Facility processes up to 24 hours per day. The quantities of materials that the Facility will accept for processing or staging for transfer, is limited by the amount of dedicated storage space that is available on any day. A summary of the storage space that has been dedicated for the different materials that the Facility receives is presented on **Table 3-3** (on following page). Recordkeeping forms are maintained electronically either in an inventory program, spreadsheets, or Netsuite at the Facility, specifically documenting storage volumes (refer to **Appendix D** for samples of these forms).

Time Limitations for Storing On-Site

Lighting Resources documents and monitors the time that materials (unprocessed and processed) are received on-site to ensure compliance with applicable local, state, and federal requirements. PCB Ballasts on a Uniform Hazardous Waste Manifest are transported offsite within 24 hours of receipt. The applicable state and federal retention time restrictions are listed below:

Regulatory Required Retention Times:

- Intact MCLs: < 1-year
- Crushed MCLs: < 1-year
- MCDs: < 1-year
- Batteries: < 1-year
- Non-PCB Ballasts: < 1-year
- PCB Ballasts: < 1-year
- Phosphor Powder: < 90-days
- Accumulation Debris: < 90-days

Table 3-3
Lighting Resources, LLC - Mercury Recovery Facility, Ocala, FL
Materials Handling, Storage/Staging Summary

Description	Handling Description	Maximum Quantities Staged / Stored
Intact Mercury Containing Lamps (MCLs)	Store then process using lamp processing equipment. The lamp materials are machine sorted into various components, and containerize for transport offsite for reclamation (i.e., mercury containing phosphor powder in 55 gallon drums), products for commercial use (i.e., separated glass in roll offs and separated metals in 1 cubic yard boxes or drums), or disposal (i.e., separated glassing roll offs). The total lamp storage volume is conservatively reflected in terms of the four (4)-foot T-12 lamps for the following reasons: 1) the size of these lamps are generally larger than other type lamps including CFLs, and U-Tubes; 2) it simplified the effort to calculate lamp storage and closure costs; and 3) A total number of 140,000 lamps was conservatively used in the closure cost estimate (**Table 7-3**), even though the maximum storage volume of 139,104 lamps was calculated. Each lamp box is 12" x 12" x 48", holds 69 lamps, and weighs approx. 44.6-lbs. The total weight stored is equal to 90,000 lbs.: (2,016-boxes x 44.6-lbs). The total storage volume is restricted only by storage space of designated lamps. Additional numbers of lamps may be stored if a type that is much smaller than a four (4)-foot T-12.	Rows 1-9: 139,104 lamps contained in 2,016 lamp boxes (90,000-lbs)
Crushed or Broken Mercury Containing Lamps (MCLs)	Store and then process using lamp processing equipment. The machine Sorts into various components, which are containerized for transport offsite to a permitted mercury reclamation facility (i.e., mercury containing phosphor powder in 55-gallon drums), products for commercial use (i.e., separated glass in roll offs for commercial sandblasting, cement filler, or ceramic tile and separated metals in 1 cubic yard boxes or drums), or disposal (i.e., separated glass in roll offs). Each 55-gallon drum of crushed/broken MCLs is assumed to weigh 500-lbs.	Row 10: Fifty-six (56) - 55-gal. drums (28,000-lbs)

Table 3-3
Lighting Resources, LLC - Mercury Recovery Facility, Ocala, FL
Materials Handling, Storage/Staging Summary

Description	Handling Description	Maximum Quantities Staged / Stored
Mercury Containing Devices (MCDs)	Approved containers of Mercury Containing Devices are transported offsite to a permitted mercury reclamation facility. The maximum quantity stored shall be equal to Four **(4)** 55-gallon drums (750 lbs. per drum)of MCDs by volume or by weight which is assumed to be a total of 3,000 pounds Drums are referenced for the purpose of weight and volume only as MCDs are usually transported in smaller containers including 5-gallon buckets	Four (4) - 55-gal. drums or equivalent volume or weight (3, 000 lbs.)
Large and Small Type Batteries	Sort by type, containerize in 55-gallon drums or other approved containers, and transport offsite to a battery recycling facility. Each 55-gallon drum of batteries is assumed to weigh 750-lbs.	Forty-eight (48) - 55-gal. drum (36,000 lbs.)
PCB Lamp Ballasts	Received in 55-gallon steel drums, and transport offsite to a ballast recycling facility where the PCBs will either be destroyed by incineration or sent for disposal in a permitted RCRA Subtitle C – landfill. Each 55-gallon drum of PCB Lamp Ballasts is assumed to weigh 750-lbs.	Two (2) - 55-gal. drums (1,500 lbs.)
Non-PCB Lamp Ballasts	Containerize, if necessary, in 55-gallon steel drums or other approved container, and transport offsite to a scrap metal dealer. Each 55-gallon drum of Non-PCB Lamp Ballasts is assumed to weigh 750-lbs.	Twenty-eight (28) - 55-gal. drums (21,000 lbs.)
Separated Glass (cullet)	Containerize in tipper, 1-cubic yard (CY) tri-ply box or gaylord box type to be consolidated in 20-yard roll off container to be later transported offsite for commercial use (i.e., commercial sandblasting, cement filler, ceramic tile) or disposal (landfilled). Each 20-yard roll offs assumed to weigh <30,000lbs.	Four (4) –20 Yard Roll off containers (120,000 lbs.)
Separated Metals	Containerize in 55-gallon fiber drums, 1-cubic yard tri-ply box, gaylord box type or into a dedicated 20-cubic yard roll off container to be later transported offsite for commercial scrap. Each 55-gallon drum of separated metal materials is assumed to weigh 750-lbs.	Sixty (60) - 55-gal. drums (45,000 lbs)
Phosphor Powder	Containerize in 55-gallon steel drums for transport offsite to a permitted mercury reclamation facility. Each 55-gallon drum of phosphor powder is assumed to weigh 750-lbs.	Thirty-two (32) - 55-gal.drums (24,000 lbs)

Battery Procedures:

Transportation is arranged with the battery recycler for transporting from the customer site to the battery recycler. Lithium-ion and lead acid batteries of any voltage along with any other battery chemistry over 9 volts, have each terminal taped, painted, individually bagged or some other method used to prevent combustion. These batteries are stored in 55-gallon drums or approved container and placed on a pallet to prevent any accidental water reaching the drum base. The nearest fire extinguisher is located within 20 feet from these drums.

- Care is taken to ensure batteries are not exposed to a flammable environment.
- Batteries are stored in an area that is setback from traffic and other activities to ensure batteries are not disturbed; specifically, they are stored along the North wall of Area A.
- The battery storage area is well ventilated, and a dry environment.

- The battery storage area is clearly identified as the Battery Storage Area; and within the battery storage area labeling is be placed on the sorted drums by battery types (e.g., lithium, etc.). The storage area has access to a Class D fire extinguisher.

3.13 Load Checking Program

A load checking (screening) program is utilized in order to detect and eliminate any attempts to deliver unauthorized wastes to the Facility. The load checking program will consist of the following components:

- Employee training on load checking procedures
- Formal and informal checkpoints locations
- Load checking inspections
- Procedures for handling unauthorized wastes
- Recordkeeping

The following paragraphs provide a discussion of the five load checking components.

Employee Training on Load Checking Procedures

Facility personnel involved in material receiving, handling, and processing are trained on load checking procedures and how to recognize unauthorized wastes. Employee training on identification of unauthorized wastes includes familiarity with typical containers, markings, labels and placards that might aid in recognizing unauthorized wastes. Periodic personnel meetings are held to ensure that staff members involved with the load checking program remain aware of waste acceptance criteria.

Formal and Informal Checkpoints Locations

Formal load checking inspections are performed and documented by employees responsible for receiving loads at the receiving dock area. Informal load checking is the responsibility of employees involved in material handling and processing activities. Employees conducting activities near the Facility entrance monitor vehicles entering the Facility, watching for potentially unauthorized waste type vehicle (e.g., placard, transporter name, etc.), and alerts management personnel if any unauthorized wastes are suspected.

Load Checking Inspections

Formal load checking inspections are conducted on waste loads delivered to the Facility. Load checking inspections are performed by personnel receiving loads at the receiving / loading docks area. Assuming no unauthorized waste materials are found during the inspection, the driver is allowed to leave, and the inspected waste material is staged for counting, labeling, and wrapping and then moved to the appropriate area of the Facility. Recordkeeping is prepared and maintained on site for a minimum of three years for loads received and accepted. Unauthorized loads are rejected, and the driver is instructed to either return the material to the generator or to an alternate facility that is authorized and permitted to receive such materials. A load rejection form would be completed and maintained on site for a minimum of three years.

Handling of Unauthorized Wastes

If unauthorized wastes are discovered during load checking activities, the Facility Manager and/or Operations Manager is promptly notified of the person and company responsible for shipping the waste, and the waste generator. The material remains on the delivery vehicle (or

if material is unloaded, it is reloaded onto the delivery vehicle), the generator is immediately notified that the material is rejected, and the material is returned to the generator, or to an alternate facility that is authorized and permitted to receive such materials.

In the unlikely event, the non-conforming (unauthorized) material is discovered after the material has been accepted by the Facility, the generator is immediately notified that the material is rejected, and arrangements are made for the generator to send a vehicle for pickup and delivery of materials to the generator, or to an alternate facility that is authorized and permitted to receive such materials. If arrangements cannot be made, Lighting Resources will arrange for the proper transport of the rejected materials to an authorized and permitted facility. Rejected loads are issued a load reject form with a new bill of lading or hazardous waste manifest form (whichever is appropriate) for use in shipping the material back to the generator or to an alternate approved facility (please refer to **Appendix D** for copies of forms). Loads rejected are recorded onto the Load Reject Log form (refer to Appendix D). Forms and logs shall be maintained at the Facility available for DEP inspection for a minimum period of three years.

Recordkeeping

Incidents and formal load checking inspections are documented in writing by employee personnel on the Bill of Lading/Manifest or count sheets and retained by the Facility for a minimum of three years. At a minimum, the following information is logged for each incident and formal inspection which takes place:

- Date and time of inspection
- Name of the hauling firm
- Name of the driver
- Source of the waste as reported by the driver
- Inspector observations
- Signatures of inspector and driver

3.14 Material Receiving, Tracking, and Recordkeeping Procedures

Incoming loads and LRL driver pick-ups are subject to quality control (QC) procedures to ensure that each load meets the Lighting Resources, LLC waste acceptance policy and permit requirements. Prior to shipment or pick-up, customers notify Lighting Resources operational staff as to the nature and volume of the shipment. Each load is issued an Order Number that will follow the shipment through the recycling process. A bill of lading/manifest (see **Appendix D**) is generated at the time a pickup or delivery is scheduled, if required.

The transportation document prepared will either be a RCRA compliant Uniform Hazardous Waste Manifest, or a Lighting Resources generated Bill of Lading/Non-Hazardous Waste manifest depending upon the waste generator's preference and waste management practices. A bill of lading or manifest is in the possession of the driver and provided to the generator at the time of the load pick-up and acceptance. Universal waste bills of lading/non-hazardous manifests/hazardous waste manifests prepared by Lighting Resources are each assigned a unique order number. The manifest number is also entered on the tracking log to ensure accountability of documentation and positive cross-reference capability. Materials are inspected by Lighting Resources drivers at the point of origin for packaging, transport compatibility, and compliance with materials that can be accepted at the Facility. Materials and packaging compliance issues are resolved prior to acceptance of the load between the driver, LRL supervisor and materials generator. Containers or pallets of containers are

labeled to ensure compliance with transportation regulations and generator/customer accountability. For materials shipped or delivered to the Lighting Resources Facility, boxes and drums are inspected for leakage, weighed, opened, and physically examined and counted.

Upon arrival of the materials at the Facility, the bills of lading/manifests are signed by Facility receiving personnel acknowledging receipt of the materials. The weight/physical count inventory is recorded on the shipping documents (bill of lading or manifest or count sheet) and subsequently entered into a computer database. The database is designed to record pertinent information about the shipment and to provide "cradle to grave" accountability of materials both received and transported offsite for additional processing, treatment, recycling or disposal. The following information (if applicable/available) is retained within the Lighting Resources' database:

- Order Number
- Date of receipt of materials
- Date of processing of materials
- Customer name
- Generator name
- Customer EPA Site ID Number
- Generator EPA ID Site Number
- Bill of Lading/Manifest Number
- Waste type and quantity
- Date that hazardous residues (on site generated phosphor powder) are shipped off site for retort mercury reclamation
- Outbound Manifest Number
- Transporter name
- Name of receiving reclamation facility
- EPA Site ID Number of receiving reclamation facility
- Date of processing by receiving reclamation facility
- Certificate of Recycling/Destruction Number/Date issued by the receiving reclamation facility

Paper documents are retained for a minimum period of three years. The original copy of the signed hazardous waste manifest is recorded in the EPA RCRAInfo program. The Certificate of Recycling issued by Lighting Resources is sent to the customer. The Certificate of Recycling bears the Order Number and the bill of lading/manifest number. Bills of lading are attached to and filed with the copy of the Certificate of Recycling alphabetically by customer or scanned and filed by invoice number. Uniform Hazardous Waste Manifests are filed separately from the receiving documents and also scanned.

3.15 Facility Operating Records and Records Retention

Records related to universal and hazardous waste management activities at the Facility are maintained for a minimum of three (3) years, and are made available upon request for inspection by any officer, employee, or representative of the DEP or U.S. EPA.

Information entered and maintained in the Facility operating records will include:

- Waste Disposition
- Description of each waste received
- Quantity (by description) of each waste received
- Method of its storage (and processing)
- Date of receipt
- The location and quantity of each waste, cross-referenced to the specific bill of lading/hazardous waste manifest (if a manifested waste)
- Records, analyses and results of waste characterizations and waste acceptance forms
- Contingency plan implementation reports
- Inspection records; results, and corrective measures
- Notices to generators of facility permit cancellations
- Closure cost estimates and annual updates
- Annual hazardous waste minimization certification
- Any notices, certifications and demonstrations received from generators, pursuant to the land disposal restrictions of Title 40 CFR § 268
- Other monitoring, testing, analytical data or corrective action information or data

3.16 Mercury-Containing Lamp Description

The only hazardous constituent at levels of concern in the materials that are processed by Lighting Resources is mercury (USEPA Hazardous Waste Code - D009). The source of the mercury is a small droplet of elemental (liquid) mercury that is contained within the lamp interior. During the life of the lamp, the charged mercury atoms discharge ultraviolet (UV) light, which is absorbed by a phosphor coating on the inside of the cylindrical glass lamp. When energized, the phosphors emit the light seen. The mercury is instantly volatized when the lamp is turned on and re-condenses when external power is removed.

A typical 4-foot fluorescent lamp (type T-12 lamp) weighs 290 grams or about 0.64 pound. Of this total weight, approximately 96% consists of glass with the metal end caps and phosphor powder comprising approximately 2% each of the remaining total weight. The weight of the mercury in the T-12 lamps will range between approximately 20 and 30 milligrams.

Other lamp sizes or types received for processing may include 8-foot fluorescent lamps, U-bend lamps, circle lamps, plastic coated lamps, and HID (high intensity discharge) lamps. Fluorescent and most HID lamps contain some quantity of elemental mercury. The mercury will, through use of the lamp, migrate into the phosphor powder coating on the interior fluorescent glass tube wall, phosphor coating on some HID lamps, or remain as a component of the fill gas in HID lamps. The amount of mercury in other type lamps will depend on the lamp type/size and can vary from 5 milligrams to 75 milligrams.

3.17 Lamp Processing Equipment and Operation

The Lighting Resources Facility uses the Balcan MP8000 equipment to process lamps. The Balcan MP8000 equipment is a completely self-contained, negative pressure lamp processor that has been designed and installed to separate, clean, and collect components of mercury containing and incandescent type lamps and other bulbs. The Balcan MP8000 can process up to 5,000 four (4)-foot fluorescent T-12 type lamps per hour through the primary in-feed

conveyor while simultaneously accepting, processing, and separating glass, metal components, and mercury containing phosphor powder through the secondary process unit from crushed lamps including:

- Fluorescent lamps
- Compact fluorescent lamps (CFL)
- Incandescent lamps, LCD lamps, Halogen
- High intensity discharge (HID) lamps

Photo Insets 8 and **9** below, illustrate the different types of lamps that are processed and the metal components that result from processing. The maximum annual processing capacity (annual throughput) of the Balcan MP8000 is reported by the manufacturer to be between eight (8) and ten (10) million lamps based on one 8-hour shift. A copy of the manufacturer specifications for the Balcan MP8000 is provided in **Appendix C**. The maximum annual throughput at the Lighting Resources Facility is limited by the amount of dedicated storage / staging space at the Facility, and the daily processing time of twenty-four (24) hours.

Photo Inset No. 8: Array of lamps that can be processed by the Balcan MP8000

Photo Inset No. 9 Metal components resulting from lamp processing

Lamp Processing Flow Diagram

A process flow diagram of the Balcan lamp processing, material separation, and transport offsite is presented in the diagram below.

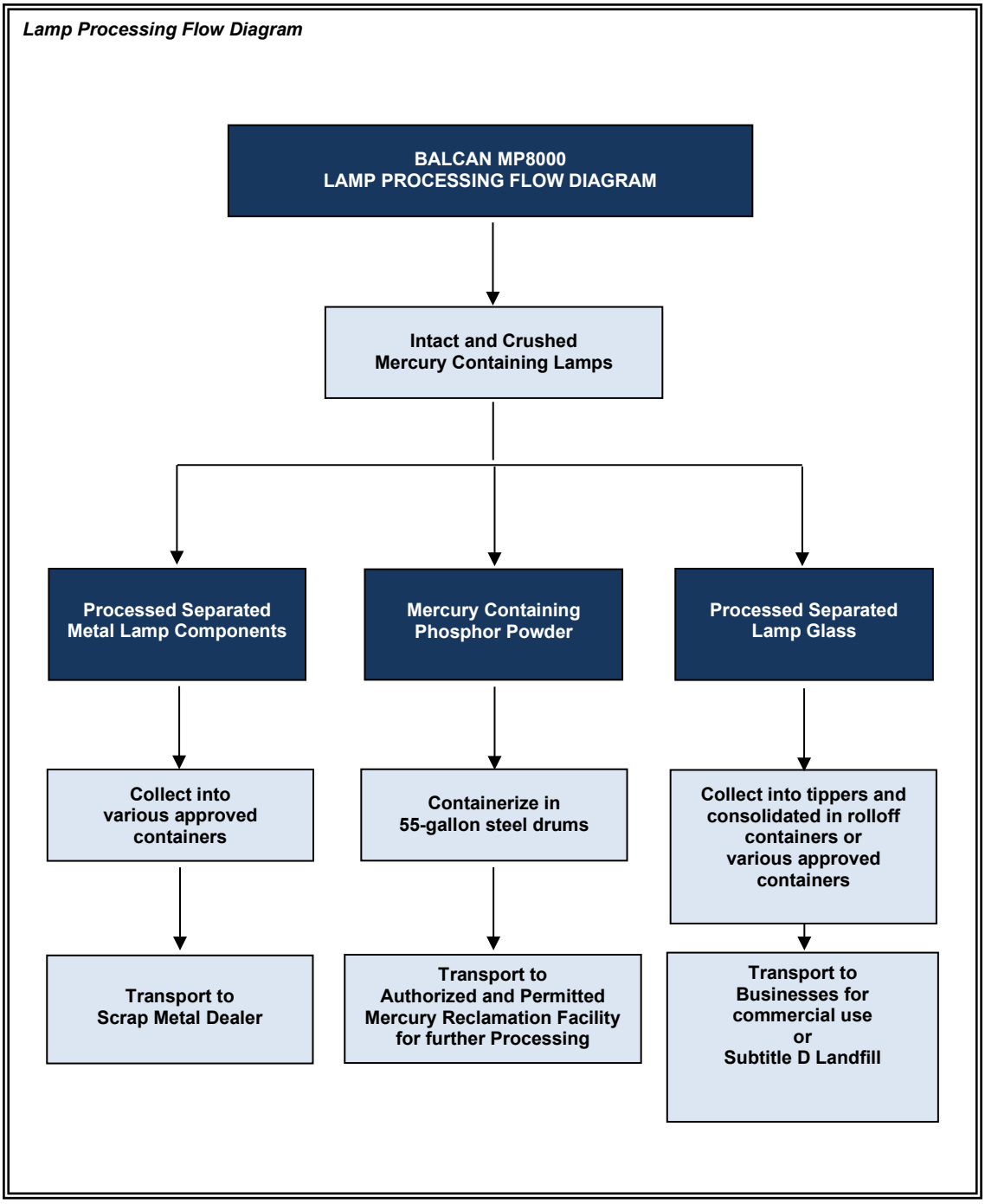

The total lamp storage volume is conservatively reflected in terms of the four (4)-foot T-12 lamps for the following reasons: 1) the size of these lamps are generally larger than other type lamps including CFLs, and U-Tubes; 2) it simplified the effort to calculate lamp storage and closure costs; and 3) *Storage space available for types will control the total amount of lamps actually stored not the conservative estimate. (cfl, straight, etc.)* A total number of 140,000 lamps was conservatively used in the closure cost estimate (see **Table 7-3** in **Section 7** of this Report), even though the maximum storage volume of 139,104 lamps was calculated.

The MP8000 processing equipment consists of the following three processing sections/units, and air extraction filter units:

- Section 1 - Primary Process Unit: whole (intact) fluorescent tubes are loaded onto an in-feed conveyor, conveyed to a crusher for separation, and conveyed to Section 3 for further processing
- Section 2 – Secondary Process Unit: other types of lamps (i.e., non-linear) and crushed fluorescent tubes are loaded into a hydraulic lift chamber and conveyed to a multi-purpose rumbler for separation and conveyed to Section 3 for further processing
- Section 3 – Cleaning /Sorting Unit: materials from Section 1 and Section 2 units are conveyed for further processing; specifically, the glass cullet and metal components are cleaned of phosphor powder and are sorted by material type (i.e., glass cullet sorted from metal components)
- Air Extraction Filter Units: the Balcan MP8000 has two (2) air extraction filter units to remove mercury bearing phosphor powder and mercury vapors from the contents of the processed lamps.

A plan view drawing of the MP8000 equipment, illustrating the different sections/units is presented on **Drawing No. D4** (included in the tab section "**Drawings**"). **Photo Inset 9** below presents the layout of the different units. A detailed description for each of these sections/units is provided in the following paragraphs.

Photo Inset No. 9: Section 1 - Primary Process Unit in foreground; Section 2 -Secondary Process Unit to the right; and Section 3 - Cleaning/Sorting Unit at far backend.

Section 1 - Primary Process Unit

Intact fluorescent tube type lamps are fed into the Section 1 - Primary Process Unit via a 10-foot in feed conveyor. Once inside the enclosed primary unit, the lamps are imploded under a negative pressure environment (i.e., vacuum) initiating the separation of glass, metal components, phosphor powder, and vaporous mercury. Following implosion, the lamp components are moved automatically to the Section 3 Unit.

Section 2 - Secondary Process Unit

Lamps other than intact fluorescent tubes (i.e., HID, CFL, "U" tubes, crushed or broken fluorescent tubes, incandescent, halogen bulbs, etc.) are processed through the Section 2 - Secondary Process Unit. This unit consists of a fully enclosed hydraulic lift chamber, a horizontal, rotating rumbler, and an enclosed conveyor system for transporting the glass cullet and other lamp components to the Section 3 Unit for cleaning and separation. Lamps and crushed materials are introduced into the secondary unit via the hydraulic lift unit. The fully enclosed hydraulic lift unit accepts loose bulk lamps or drums of crushed lamps and lifts and tilts to pour the materials into a rumbler. The horizontal, rotating rumbler breaks intact lamps through tumbling, and separates and conveys the materials to the Section 3 Unit for cleaning and sorting.

Section 3 – Cleaning and Sorting Unit

Processed materials from the Sections 1 and 2 units are conveyed into the Section 3 – Cleaning and Sorting Unit. The Section 3 Unit consists of two (2) horizontal, rotating / vibrating rumblers (rumblers are each 4-meters long and are similar to trommels without screens/holes). Once inside the rumblers, the glass cullet and metal components are cleaned using a high-pressure vacuum to lift and collect the phosphor powder and mercury vapors. The cleaned glass and metals are conveyed from the rumblers into a magnetic separating chamber (i.e., chamber with rotating magnets) where the ferrous metal components are separated and removed from the glass cullet. The glass cullet then gets passed through a vibrating finger screen to separate and remove any remaining non-ferrous metals for separate capture while allowing the cleaned glass cullet to pass through for collection. Following the component cleaning and separation within the Section 3 Unit, the cleaned glass cullet and cleaned metal components are collected separately into cubic yard boxes, 55-gallon drums or tippers. The collected glass and metals are tested for residual mercury contamination prior to release for local reuse in accordance with Chapter 62.737.840 F.A.C. (please refer to the *Sampling and Analysis Standard Operating Procedures* contained in **Appendix E**).

Air Extraction Filter Units

The Balcan MP8000 has two (2) air extraction filter units to remove mercury bearing phosphor powder and mercury vapors from the contents of the processed lamps. Mercury-bearing lamp phosphor powder and air containing mercury vapors are drawn from fifteen separate locations on the Balcan processing units to ensure maximum collection of mercury vapors, and contaminated phosphor powder. Manufacturer information for the Balcan equipment and air extraction filter units is provided in **Appendix C**.

3.18 Analytical Testing of Processed Lamp Components

Analytical testing has been performed on the processed lamp components at the Lighting Resources Florida facility. A summary of the most recent testing performed, and analytical results is presented in **Table 3-4** below. The analytical results show that the lamp glass and lamp metals were below the U.S. EPA regulated toxicity level for mercury of 0.2 mg/L based on the toxicity characteristic leaching procedure (TCLP). A copy of the analytical results is provided in **Appendix C**.

Table 3-4			
Lighting Resources, LLC - Mercury Recovery Facility, Ocala, FL			
Summary of Analytical Testing for Mercury			
Material Tested C-3	**Test Method**	**Result**	**Unit**
Lamp Glass	Total Mercury: SW846 – 7471A	0.012	mg/Kg
Lamp Metal End Caps	Total Mercury: SW846 – 7471A	0.130	mg/Kg
Lamp Metal Multipurpose	Total Mercury: SW846 – 7471A	0.083	mg/Kg
Phosphor Powder (pre)	TCLP Metals: SW846 – 1311/7470A	0.37	mg/L
Sample 469148H			
Phosphor Powder (post)	TCLP Metals: SW846 – 1311/7470A	0.012	mg/L
Sample 469148H			

3.19 Phosphor Powder / Mercury Vapor Capture and Air Pollution Control

The MP8000 is equipped with two air extraction filter units, each unit having a particulate capture and mercury vapor collection / filtration sub-units. The air extraction units are designed to draw off mercury-bearing phosphor powder and mercury vapor from the contents of the lamps down to a particle size of five (5) microns. Both air extraction filter units operate continuously to ensure the lamp processing is conducted under a negative pressure (i.e., under vacuum) at all times. Mercury bearing phosphor powder is collected on the unit filters down to a 5-micron particle size. Dusts finer than 5-microns and vapors that pass through the filter units are ducted to a main filter stack that contains sulfur-based activated carbon. The mercury reacts with the activated carbon and allows the exhausted air to be mercury-free.

Mercury bearing phosphor powder and air containing mercury vapors are drawn from fifteen separate locations on the processing equipment to ensure maximum collection of mercury, mercury vapors, and contaminated phosphor powder. The air and particulate filtration units are set to operate continuously for mercury vapor collection and fugitive emission prevention. The air discharge from the filtration units is vented and released directly within the confines of the lamp processing room obviating the necessity of an exterior exhaust stack(s). The environmental benefits and protections garnered are incalculable as the lamp processing machine's integral air filtering system will continuously recirculate and clean the air potentially exposed to vaporous mercury.

HEPA filters used to separate phosphor powder are cleaned via continuous air backflow and collected in sealed 55-gallon steel drums attached directly to the air filtration units. Each drum collects powder from approximately 40,000 fluorescent lamps. When filled, drums are removed from the machine, classified as D009 characteristic hazardous waste, and staged for transport offsite to an authorized and permitted mercury reclamation facility.

Manufacturer information for the Balcan equipment and air extraction filter units is provided in **Appendix C**.

3.20 Air Monitoring and Air Emission Control

Internal air quality is routinely monitored for mercury vapor in the air to ensure that personnel are working in a safe environment, and to ensure that the air pollution control equipment is operating properly. Lighting Resources monitors specific areas of the Facility on a daily basis to ensure that the mercury levels are well below the OSHA Permissible Exposure Limit (PEL) of 0.1 mg/m^3. Specifically, Lighting Resources utilizes a threshold limit of 0.05 mg/m^3 and ensure Facility levels do not exceed this limit. The threshold limit of 0.05 mg/m^3 is the recommended exposure limit (REL) established by the National Institute for Occupational Safety and Health (NIOSH). The NIOSH REL of 0.05 mg/m^3 is a time weighted average for up to a 10-hour workday and a 40-hour work week.

The areas where monitoring is performed are shown on **Figure 7** on the following page. Lighting Resources takes ambient air readings using a Jerome 431 X Mercury Analyzer. Air readings are taken in the Administrative Office area and in Areas A, B, and C. The air monitoring form lists the sampling locations and air monitoring readings obtained. Air monitoring is performed daily throughout each workday. The air monitoring form contains the following information:

- Date and time of monitoring
- Monitoring locations
- Person's name performing the monitoring
- Mercury vapor reading

This mercury analyzer instrument has a sensitivity of 0.001 mg/m^3. During operation of the lamp processing equipment, air monitoring also includes additional sampling of the Balcan air filtration system (in Area B – the Lamp Processing Room) to assure that it is functioning properly.

In the unlikely event the ambient room air exceeds the designated threshold limit of 0.05 mg/m^3, Lighting Resources requires the use of half-mask or full-face respirators with NIOSH mercury filters /cartridges by Facility personnel until the source of the mercury has been detected and mitigated. The Facility Manager or Emergency Coordinator makes this determination. Employees are trained to use OSHA Level C protection which includes air-purifying respirators. If mercury levels exceed concentrations appropriate for Level C protection, Facility operations are immediately halted, personnel are evacuated (refer to **Drawing No. D7** for locations of Facility building evacuation points, and emergency meeting points located outside of the Facility building), and emergency responders are contacted (please refer to **Section 4** for emergency procedures). Facility operations will not resume until the Lighting Resources Emergency Coordinator or Branch Manager determines that it is safe to do so.

FIGURE 7: Air Monitoring Locations

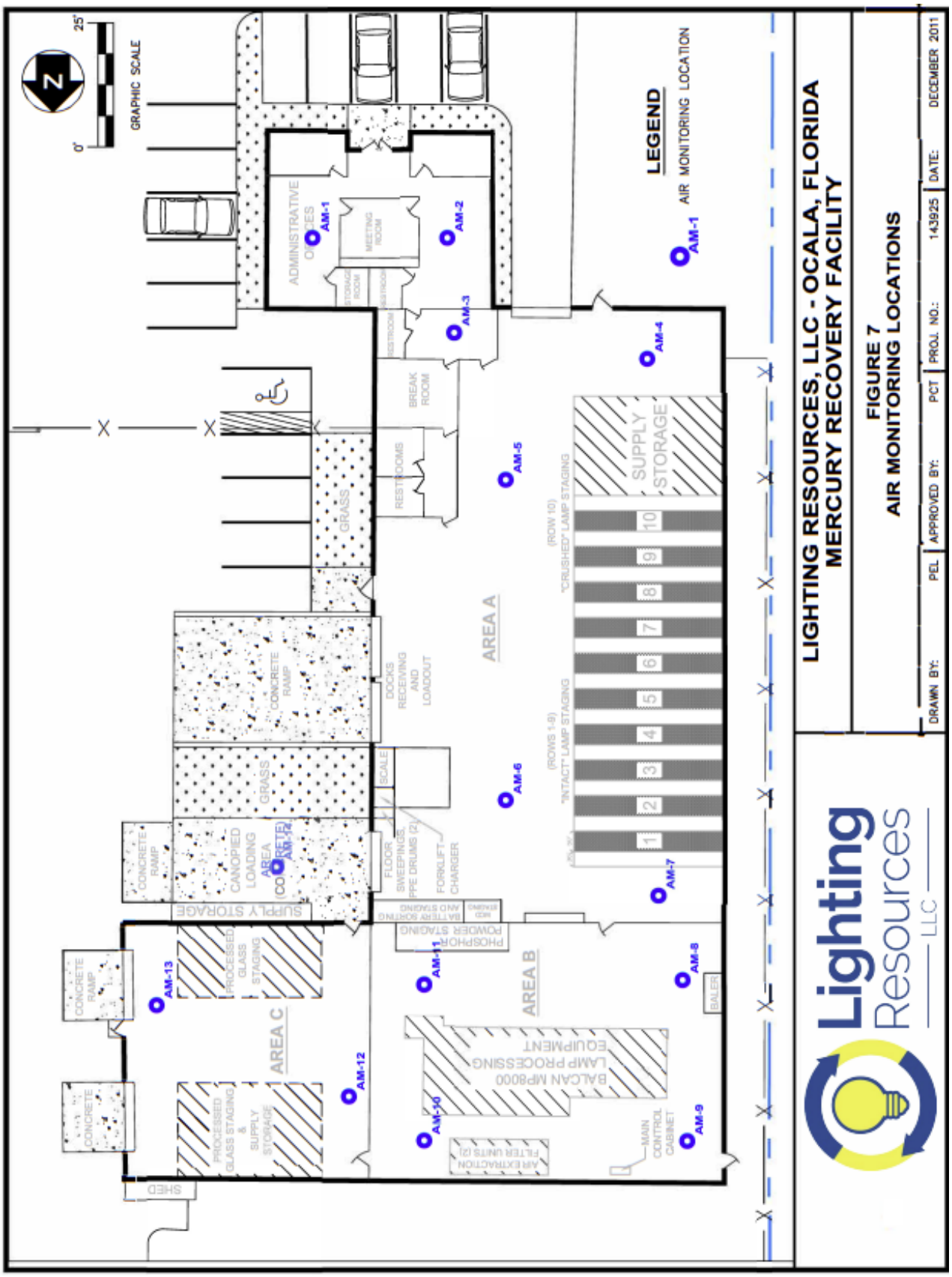

In the event there are spikes in the mercury levels in localized areas, the cause is determined, and appropriate remedial action is taken. A spike would typically indicate an excess lamp breakage in a given shipment with poor containment, an equipment malfunction or system leak. Air filtration media is deemed "saturated" and is replaced when mercury emissions reach the threshold limit of 0.05 mg/m3. Frequent testing in multiple locations of the Facility during operations ensures that malfunctions are corrected promptly.

Lighting Resources also has an extensive floor maintenance program to minimize potential contamination of the plant floor. Areas potentially contaminated through lamp breakage are cleaned routinely with sweeping or mopping. There are also sticky mats at the entrances from Area A to the Offices to trap any contamination from the plant floor.

3.21 Sampling and Analytical Testing of Processed Lamp Materials

In accordance with 62-737.840 F.A.C., Lighting Resources conducts routine sampling and analyses of the processed lamp materials prior to shipment offsite for further processing, recycling, or disposal. A brief summary of the sample collections and testing that is performed is provided below. A detailed sampling and analysis plan is provided in **Appendix E**.

Sampling and Testing

Lighting Resources takes daily physical samples separated glass, and the separated metal from straight lamp conveyor (1) and multipurpose (2) at the point at which the materials exit the lamp processing equipment. Collected samples are representative of the materials processed during the day they were collected. At the beginning of each week and more often, as necessary, to facilitate the offsite transport of separated glass, the prior week's daily samples are consolidated into one or more weekly composite sample(s) and submitted for chemical analysis of total mercury content (or alternatively TCLP mercury content) using an approved EPA methodology. The weekly composite sample is prepared by thoroughly mixing equal amounts of the daily samples into a single container. The results of this analysis shall be considered the *weekly composite sample of process operations*. The **total mercury content of the *weekly composite sample of process operations* must be less than 3 parts per million (ppm)**, if the tested materials are to be shipped to a facility other than a mercury reclamation facility.

Twelve (12)-Week Average of Mercury Content

In accordance with 62-737.840 F.A.C., Lighting Resources maintains a 12-week average value of the levels of mercury contained in the processed glass and processed metals. The 12-week average is a rolling average calculated using the most recent 12-weekly test results obtained from the weekly tested composite samples. The **12-week average for total mercury content must be less than 1 ppm**, if the tested materials are to be shipped to a facility other than a mercury reclamation facility.

3.22 Inspection and Maintenance Program

Facility equipment, systems, structures, and material handling / processing /storage/ staging areas are routinely inspected and maintained in a manner that ensures continued and proper operation compliant with applicable regulations. Personnel are assigned to routinely inspect and maintain the following:

- Overall facility cleanliness
- Personal protective equipment
- Safety and emergency equipment
- Lamp processing equipment
- Air handling system filters
- Forklifts
- Monitoring equipment
- Material handling, processing, and staging areas (Areas A, B, and C)
- Facility floors, walls, and structures
- Site fencing and gates
- Site access roads
- Receiving / loading dock area
- Facility signage
- Stored containers
- Inventory of supplies
- Employee restrooms
- First aid equipment
- Spill emergency kits and equipment

Equipment is inspected and maintained in accordance with the manufacturer's recommendations. The frequency of inspection depends upon the item. A detailed description of the Facility inspections and maintenance including scheduled frequency and lamp equipment maintenance (with photos) is provided in **Table 8-1** in **Section 8**. The inspection schedule is followed for conducting routine preventative maintenance. If equipment or associated parts are found to be faulty or worn out, the equipment shall be repaired or replaced as soon as practical. Proper equipment and supplies are available for use at the Facility during hours of operations to ensure the continued and proper operation of the Facility.

4.0 EMERGENCY PROCEDURES AND HAZARDOUS WASTE CONTINGENCY PLAN

The purpose of this document is to describe the Emergency Procedures and Hazardous Waste Contingency Plan (Plan) for the Lighting Resources Facility and its operations pursuant to Title 40 CFR Part § 264, Subpart D, and Chapter 62-737 F.A.C. The provisions of this Plan are to be carried out immediately whenever there is a medical emergency, or a fire, explosion, or spill / release of hazardous waste or hazardous waste constituents (mercury and other) which could threaten human health and/or the environment (in accordance with Title 40 CFR § 264.51(b)). This Plan outlines specific responsibilities and procedures for the prompt and effective response to an emergency situation. This Plan is organized by the following sections:

- Emergency Responsibilities of Emergency Coordinators
- Emergency Contact Information
- Regulatory Agencies Contact Information
- Emergency Equipment
- Medical Emergency Procedures
- Fire and Explosion Emergency Procedures
- Mercury (or other Hazardous) Spill / Release Emergency Procedures

This Emergency Procedures and Hazardous Waste Contingency Plan is designed to meet the applicable requirements of Title 40 CFR § 264, Subpart D, and Chapter 62-737 F.A.C.

4.1 Emergency Responsibilities of Emergency Coordinators

The Facility Manager serves as the primary Emergency Coordinator, and the Operations Manager, Logistics Coordinator, or Office Administrator will serve as the alternate Emergency Coordinator in the absence of the Facility Manager. Both the primary and alternate Emergency Coordinators have been appropriately trained to respond to emergencies that could potentially occur throughout the Facility. In the unlikely event of an emergency, the designated Emergency Coordinator is responsible for implementing the response actions outlined within this Plan.

4.2 Emergency Contact Information

An emergency contact list containing the names and contact phone numbers listed below, is posted in the Administrative Offices, and within Areas A, B, and C of the Facility. The emergency contact list is clearly posted in each designated area on a wall that is unobstructed from view and access.

4.2 Emergency Contact Information		
Emergency Coordinator:		
Name:		Buff Fritz
Cell Phone:		352-342-6051
Work Phone:		352-509-3001
Address:		
Alternate Emergency Coordinator #1:		
Name:		Nick Nastav
Cell Phone:		352-816-0558
Work Phone:		352-509-3001
Address:		
Alternate Emergency Coordinator #2:		
Name:		Raenell Norris
Cell Phone:		352-421-2377
Work Phone:		352-509-3001
Address:		
▪ **Emergency Contacts:**		
Ocala Police Department:		911
(Non-emergency):		352-369-7000
Ocala Fire Department:		911
(Non-emergency):		352-629-8306
Local Ambulance Service:		911
Ocala Regional Medical Center:		352-401-1000
Florida DEP Central District:		407-897-4100
U.S. EPA Region 4:		404-562-8700
Marion County Emergency Mgmt		352-351-8077
State Warning Point		800-320-0519
Chemtel		800-255-3924
4.3 Regulatory Agencies Contact Information		
Local		**Marion County Emergency Management**
Address:		692 NW 30th Ave., Ocala, FL 34475
Phone:		352-369-8100
State		**Florida DEP - Central District**
Address:		3319 Maguire Blvd., Ste. 232, Orlando, FL 32803
Phone:		407-897-4100
Federal		**U.S. EPA Region 4**
		Hazardous Waste Management Division
Address:		61 Forsyth St. SW, Atlanta, GA 30303
Phone:		800-241-1754
		National Response Center
		800-424-8802

4.4 Emergency Equipment

Lighting Resources shall maintain the following emergency equipment on-site and in working condition:

- Fire Extinguishers. Portable fire extinguishers are maintained in the Facility building (see **Drawing No. D7** for locations) to extinguish a fire.
- Mercury Spill Kit. Commercial spill kits (2) are maintained in the Facility building (see **Drawing No. D7** for locations) to respond to a mercury spill if one should occur. The spill kit will include but not be limited to: absorbent powder (e.g., MerconSORB™, Hg Absorb®, etc.), chemical sponges, pump/aspirator, a cleaning/decontaminating solution (to safely suppress Mercury vapor), Nitrile gloves, safety glasses, wipes, rinse bottle, recovery bags. Directions on how to use the equipment is located in the cover of the box.
- Hazardous Material Release / Spill (*other than Mercury*). The following equipment is maintained in the Facility building to facilitate containment of a hazardous material release or spill while waiting for emergency responders to arrive and take over:
  - Plastic bags and sheeting
  - Vermiculite
  - General Purpose Detergent
  - Baking Soda
  - D.O.T. containers & recovery drums
  - Shovels, brooms, and various other hand tools
  - Barricades / cones
- Respirators. Half-Mask respirators with mercury vapor cartridges and HEPA filters are available for use in an emergency. Respirators are maintained in a cabinet located in the Branch Manager's office in the Administrative Offices.
- Protective Clothing. Tyvek full-body coveralls (or similar) are available for use in an emergency to provide protection from fluorescent lamp powder (i.e. dust) and mercury particulates. Coveralls are maintained in Area C of the Facility Building.
- First Aid Kits and Eye Wash Stations. Commercial first aid kits and eye wash stations are located throughout the Facility (see **Drawing No. D7** for locations). The contents of the first aid kits or eye wash stations are used in the event of an accident.
- Mercury Vapor Analyzer. A Jerome Mercury Vapor Analyzer is maintained on-site to routinely perform air monitoring and to monitor mercury vapor emissions in an emergency. The mercury vapor analyzer is kept in the Administrative Office area.
- Communication Devices. The Emergency Coordinators carry cellular phones. Additionally, telephones are located within the Administrative Offices and Area A are available to Facility personnel to call 911 and emergency assistance.

4.5 Medical Emergency Procedures

Employee injuries at the site shall be reported immediately to the Emergency Coordinator in charge. The Emergency Coordinator shall determine whether the injury is minor and can be attended to on-site, whether it should be seen at the local walk-in clinic or whether the injury is a medical emergency that warrants immediate attention by a medical professional offsite. The Emergency Coordinator shall implement the procedures outlined below in the event of an on-site injury.

Emergency Coordinator Medical Emergency Procedures

1. Quickly evaluate the type and extent of injury. If the injury is determined to be a medical emergency follow steps 2 through 7 below.
2. Contact Ocala 911 Emergency Services with the location and details of injured party and assign a worker to stand at the Facility entrance to direct incoming emergency services personnel upon their arrival.
3. Move injured personnel ONLY if failure to do so will result in additional harm or injury.
4. Begin emergency first aid as needed on injured personnel (including CPR if needed) until emergency services personnel arrive on site and take over scene.
5. If injury is a result of an operational activity, instruct workers accordingly with appropriate emergency response to remove the risk of further injury.
6. Notify the applicable local, state, and federal agencies of such emergency as required by specific regulations.
7. Document incident and response and maintain documentation on file for a minimum period of three years.

First Aid Stations

First Aid supplies for minor injuries are available at five (5) first aid stations located throughout the Facility as shown on **Drawing No. D7**. As part of employee safety training, staff is shown where first aid stations are located.

Local Medical Facility

The Ocala Regional Medical Center is located at 1431 SW 1st Ave, in Ocala, Florida, Telephone: 352-401-1000 and is approximately 1.1 miles from the Lighting Resources Facility as shown in the map on the following page.

Local Walk-in for Non-emergency

Concentra Urgent Care
2221 SW 19th Ave. Rd. Ste. 100
Ocala, FL 34471
352-629-9100

Emergency Route to Ocala Regional Medical Center

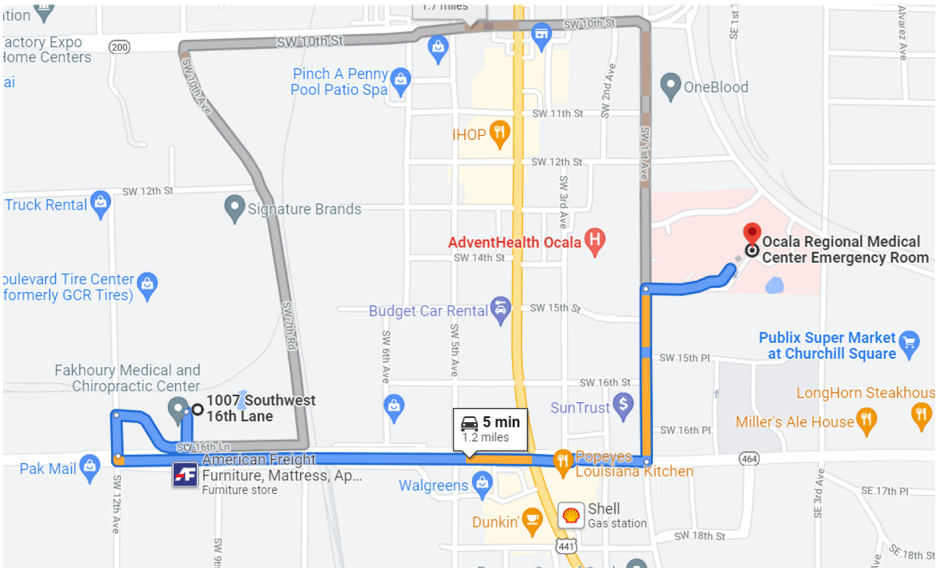

1007 SW 16th Ln
Ocala, FL 34471

- Head south toward SW 16th Ln
  230 ft
- Turn right onto SW 16th Ln
  0.1 mi
- Turn left onto SW 12th Ave
  259 ft
- Turn left at the 1st cross street onto State Rte 464 E/SW 17th St
  0.7 mi
- Turn left onto SW 1st Ave
  0.2 mi
- Turn right
  0.1 mi

Ocala Regional Medical Center Emergency Room
1431 SW 1st Ave, Ocala, FL 34471

4.6 Fire and Explosion Emergency Procedures

If a fire or explosion occurs at the Facility, notify the Emergency Coordinator immediately. A description of the incident including the location and extent as well as the threat to life or property shall be given. The Emergency Coordinator implements the procedures outlined below in the event of a fire or explosion emergency.

Emergency Coordinator Fire and Explosion Emergency Procedures

1. Quickly notify site personnel by public address system or in person, specifically instructing non-emergency trained personnel to quickly evacuate the Facility and instructing emergency trained personnel where to assembly to assist in response effort.
2. Evaluate the situation to determine if injuries are involved. If serious injuries are involved, quickly move injured parties to a safe location (as necessary) and notify

Ocala 911 Emergency Services relaying the site location and emergency situation. Assign the appropriate staff person to wait at the Facility entrance to direct emergency services personnel upon arrival.

3. Instruct emergency trained personnel to begin firefighting activities (as necessary) with available fire extinguishers if this can be done without threat to their safety. If mercury-containing materials are involved, ensure that workers are wearing proper respirators and other required personal protective equipment (PPE).
4. Begin and/or supervise first aid on injured parties as needed.
5. Evacuate workers immediately at any time that continued firefighting activities endanger them (points of evacuation throughout the Facility building, and meeting locations outside of Facility building are presented on **Drawing No. D7**).
6. Continue with and/or supervise appropriate emergency and/or first aid procedures until relieved by emergency service personnel.
7. If the incident involves mercury containing materials, inform emergency service personnel upon arrival, the need to use respirators and any other PPE, and if necessary provide emergency service personnel with appropriate PPE.
8. Notify the applicable local, state, and federal agencies of the fire or explosion emergency as required by specific regulations.
9. Document incident and response and maintain documentation on file for a minimum period of three years.

Fire Detection and Suppression Equipment

The following detection and fire suppression equipment are available at the Facility:

- Smoke and fire detection equipment
- Ten (10) Type ABC fire extinguishers
- One (1) Type D fire extinguishers
- Fire hydrant located at front of property

The locations of the fire extinguishers are shown on **Drawing No. D7** (tab section "**Drawings**"). As part of employee emergency training, staff is shown where fire extinguishers are located.

4.7 Mercury (or other Hazardous) Spill / Release Emergency Procedures

If a spill or release of mercury or other hazardous material occurs at the Facility, it is the duty of the Emergency Coordinator to provide the appropriate emergency response to prevent a threat to life or the environment. The Emergency Coordinator must be advised of any spill immediately and will make the necessary decisions necessary to implement an emergency response plan. The Emergency Coordinator shall implement the procedures outlined below in the event of a spill or release of mercury (or other hazardous material).

Emergency Coordinator Procedures for Mercury Spill / Release at Facility:

1. Quickly evaluate the situation to determine if injuries are involved. If serious injuries are involved, quickly move injured parties to a safe location (as necessary) and notify Ocala 911 Emergency Services relaying the site location and emergency situation. Assign the appropriate staff person to wait at the Facility entrance to direct emergency services personnel upon arrival. Note: move injured parties to safety <u>ONLY</u> if it can be

done without threat of additional injury. If movement is not possible, immediately place the injured party on oxygen.

2. Notify personnel not wearing respirators to evacuate the affected spill / release area (points of evacuation throughout the Facility building, and meeting locations outside of Facility building are presented on **Drawing No. D7**).
3. Begin and/or supervise first aid on injured personnel as necessary. Immediately cover open wounds to protect from exposure. Continue first aid until relieved by emergency services personnel.
4. Upon arrival, advise emergency services personnel of the need to use respirators and provide to them if necessary.
5. Check mercury vapor level with direct reading using a Mercury Vapor Analyzer. Continue to wear respirators until mercury vapor level drops below 0.05 mg/m^3.
6. Notify the applicable local, state, and federal agencies of incident as required by specific regulations.
7. Document incident and response and maintain documentation on file for a minimum period of three years.

Emergency Coordinator Procedures for Other Hazardous Material Spills / Release:

1. Quickly evaluate the situation to determine if injuries are involved. If serious injuries are involved, quickly move injured parties to a safe location (as necessary) and notify Ocala 911 Emergency Services relaying the site location and emergency situation. Assign the appropriate staff person to wait at the Facility entrance to direct emergency services personnel upon arrival. Note: move injured parties to safety ONLY if it can be done without threat of additional injury. If movement is not possible, immediately place the injured party on oxygen.
2. Notify personnel to evacuate spill / release area and wait for emergency responders to contain and cleanup spill / release (points of evacuation throughout the Facility building, and meeting locations outside of Facility building are presented on **Drawing No. D7**).
3. Begin and/or supervise first aid on injured personnel as necessary. Immediately cover open wounds to protect from exposure. Continue first aid until relieved by emergency services personnel.
4. Notify the applicable local, state, and federal agencies of incident as required by specific regulations.
5. Document incident and response, and maintain documentation on file for a minimum period of three years.
6. Notify the applicable local, state, and federal agencies of incident as required by specific regulations.
7. Document incident and response and maintain documentation on file for a minimum period of three years.

If a spill or release of mercury occurs en route to the Facility, it is the duty of the Emergency Coordinator to provide the appropriate emergency response to prevent a threat to life or the environment. The Emergency Coordinator is to be advised of any spill immediately and makes the necessary decisions necessary to implement an emergency response plan. The Emergency Coordinator will implement the procedures outlined below.

Emergency Coordinator and/or Driver Procedures for Mercury Spill En Route to Facility

1. Quickly evaluate the situation to determine if injuries are involved. If serious injuries are involved, quickly move injured parties to a safe location (as necessary) and notify **911** Emergency Services relaying the site location, emergency situation, and assistance needed. Note: move injured parties to safety ONLY if it can be done without threat of additional injury.
2. Notify personnel not wearing respirators to evacuate the affected spill area. Use vehicle Warning Triangles to mark the spill area and to warn other motorists of the accident site as necessary.
3. Lighting Resources LLC employees have access to the ChemTel Chemical Expert Assistance Hotline by dialing 1-800-255-3924. ChemTel also provides an emergency response team if required.
4. Begin and/or supervise first aid on injured personnel. Immediately cover open wounds to protect from mercury exposure. Continue first aid until relieved by emergency services personnel.
5. Drivers will put on appropriate PPE (respirator, Tyvek suit, gloves, etc.), and cover any mercury contaminated materials leaking or seeping from the vehicle with a mercury absorbent type powder or decontaminant powder (e.g., MerconSORB™, Hg Absorb®, HgX , or other approved equivalent). The affected spill area is to be covered with a tarp after powder is applied to prevent airborne spread of the spill.
6. If necessary, advise emergency services personnel of the need to use respirators.
7. Do not open vehicle cargo area door until Emergency Coordinator and/or emergency response team is on site unless you can be reasonably sure that container (lamps, lamp boxes, etc.) breakage is very limited and that opening the vehicle cargo container will not contribute to additional release of mercury contaminated materials.
8. Upon notification of a spill incident by a company driver or emergency services personnel, the Emergency Coordinator will immediately notify the following agencies of the spill event:
   - Florida DEP Emergency Response Office: 407-897-4100
   - State Warning Point: 800-320-0519
   - National Response Center: 800-424-8802
   - Emergency Response Team .Chem-tel 800-255-3924
9. The Emergency Coordinator and/or driver will depart the scene only after the scene has been appropriately contained and remediated by the emergency response team.
10. Notify the applicable local, state, and federal agencies of incident as required by specific regulations.
11. Document incident and response and maintain documentation on file for a minimum period of three years.

5.0 ENVIRONMENT, HEALTH AND SAFETY PLAN

The Environment, Health and Safety Plan (EHS) has been developed to protect the health and safety of Lighting Resources personnel and the general public, to be protective of the environment, and to comply with applicable local, state, and federal regulations (including but not limited to OSHA and DEP regulations). New personnel will receive comprehensive environment, health and safety training prior to actual participation in production work at the Facility. Subsequent to receiving training, the new employees are closely supervised during the first few months of working in the Facility (by experienced and senior employees) to ensure they understand and follow proper procedures and protocol.

Employee health and safety training is performed on an ongoing basis, beginning with the initial new employee training, and continuing with monthly safety meetings, and yearly refresher training. This Plan is organized by the following sections:

- Fire Prevention and Control Procedures
- Lockout/Tagout Procedures
- Equipment Safety
- General Safety Procedures
- Air Monitoring
- Personnel Training

5.1 Fire Prevention and Control Procedures

Facility personnel are trained on fire prevention and control procedures to minimize the threat of fire at the Facility, to be protective of their health and safety, and the public health and safety, and to be protective of the environment.

Fire Prevention

Steps are taken to minimize the threat of fire at the Facility. These steps will include but are not limited to employee training, prohibition of smoking, and use of fire detection and suppression equipment. Each preventive step is discussed further in the following paragraphs.

Employee Training

Employees are made aware of the common site-specific fire hazards, the fire prevention and control procedures, and the proper evacuation routes and designated meeting areas in the event of a fire. Employees are instructed on the proper use of portable fire extinguishers.

Prohibition of Smoking

Because combustible materials may be exposed, smoking will not be allowed within the Facility. Signs are displayed indicating the designated smoking areas.

Fire Detection and Suppression Equipment

The Facility is outfitted with smoke and fire detection devices and portable fire extinguishers. This equipment shall be inspected monthly to ensure they are in good working order. A licensed contractor will perform service on the fire extinguishers annually or following each use.

5.2 Lockout / Tagout Procedures

Site personnel are trained on lockout / tagout procedures; specifically, personnel are taught the importance of using such procedures, which personnel are authorized to perform lockout / tagout of equipment, and under what circumstances will lockout / tagout be used.

Lockout / Tagout

The purpose of this procedure is to establish the minimum requirements for the lockout/tagout of energy. It shall be used to ensure that before an employee performs servicing or maintenance activities where the unexpected energization or start-up of machines or equipment or release of stored energy could cause injury to employees, potentially hazardous energy shall be controlled by lockout/tagout methods.

Rules for Using Lockout / Tagout Procedures: Equipment shall be locked out/tagged out to protect against accidental or inadvertent operation when such operation could cause injury. At such time employees shall be instructed to not operate any switch, valve or other energy-isolating device bearing a lock/tag. Equipment which may not be locked out must, at a minimum, be tagged out to notify employees that the equipment is not safe for use.

Responsibility: The Facility Manager shall ensure that employees are properly instructed on lockout/tagout procedures, and on the safety significance of these procedures. If outside contractors are to be used to perform service or maintenance on machines or equipment at the Facility, Lighting Resources and the contractor will familiarize each other with their respective lockout/tagout procedures.

Requirements for Locks / Tags. The following is a list of requirements for lockout / tagout devices to be used at the Facility:

- *Durable*: Devices must be durable for the environment in which they are placed. Tags must be resistant to the site conditions and remain legible for the period of time that they are used.
- *Standardized*: Across the site, locks and tags must be standardized by color, shape or size. Tags must also use a standard print and format.
- *Substantial*: Locks must not be capable of being removed without the use of excessive force or unusual techniques. Tags must not be able to be removed inadvertently or accidentally. In addition, tags must be attached with a non-reusable type of attachment.
- *Identifiable*: Tag must identify the employee that marked the device. For tags on energized equipment, the tag must provide a specific warning against operation of the machine or equipment.

Preparation for Lockout / Tagout: An investigation shall be made to locate and identify energy sources to be certain which switch, valve or other energy isolating devices apply to the equipment to be locked out/tagged out. More than one energy source may be involved. Questionable energy source problems shall be resolved before job authorization is obtained and lockout / tagout commences.

Sequence of Lockout/Tagout Procedures: The following is the sequence of lockout / tagout procedures that must be followed at the Facility:

1. Only an authorized employee may execute lockout / tagout procedures.
2. Notify affected employees that a lockout / tagout is required and the reason it is required.
3. If the equipment is operating, shut it down by the normal stopping procedure.
4. Verify that isolation and de-energization of the machine or equipment has been accomplished.
5. Follow equipment-specific repair or maintenance procedures.

Restoring Equipment to Normal Operations: The following is the sequence of procedures to follow when restoring equipment to normal operations:

1. Only the employee who originally locked out/tagged out the equipment may remove the devices, unless otherwise authorized by the Facility Manager.
2. After the servicing and/or maintenance are complete and equipment is ready for normal operation, check the area around the machines or equipment to ensure that no one is exposed.
3. After tools have been removed from the affected machine or equipment, guards have been reinstalled and personnel are clear of the area, remove lockout or tagout devices. Operate the energy isolating devices to restore energy to the machine or equipment.
4. Notify employees that lockout/tagout devices have been removed from the machine or equipment.

5.3 Equipment Safety

Facility personnel are trained to implement the following safety procedures when operating equipment:

- Immediately report malfunctions
- Check equipment before starting
- Use steps and hand holds
- Keep steps clean
- Inspect area before operating equipment
- Operate from driver’s seat only
- Wear seat belts
- Never mount operating/moving equipment
- Keep attachments low
- Check blind areas
- Keep enough clearance
- Avoid excessive speed/power
- Park on level ground
- Lower attachments to ground when parked
- Avoid leaving equipment unattended

- Always work with adequate lighting
- Clean equipment before repairing
- Be aware of nearby personnel
- Check work area
- Use audible vehicle reverse movement warning devices

5.4 General Safety Procedures

Special attention is paid to safety and steps are taken to minimize the risk to personal safety. These topics discussed below include communications and security, personal protective equipment and confined space entry.

Hazard Communications and Security

Electrical service and telephones are available for regular and emergency communications. Should any part of the Facility be vandalized, Lighting Resources will immediately notify the Police Department. The portion of the site or equipment that has been vandalized is inspected to determine the amount of damage. If equipment is determined to be unsafe it is locked out/ tagged out until maintenance can be performed.

Personal Protective Equipment

Employees at the Facility are required to wear proper personal protective equipment (PPE). Required PPE may include gloves, hearing protection, eye protection, hard hats, steel-toed boots, coveralls, half-face or full-face respirators or a combination of the above as required for specific tasks or work areas. Employees are trained in the proper use and care of PPE and are fit tested for respirator equipment as appropriate.

Confined Space Entry

In the event that a confined space entry must occur, proper notification procedures are followed to help ensure that accidents do not occur at the Facility. A confined space is considered to be a space that is large enough and so configured that it can be bodily entered to perform work, with limited or restricted means of entry or exit, but is not designed for continuous employee occupancy. Employees are trained in the procedures for recognizing and conducting confined space entries.

5.5 Air Monitoring

Designated employees (See Table 3-1) are trained on air monitoring procedures at the Facility. Monitoring points, proper use and maintenance of monitoring equipment, monitoring documentation, action level, and frequency of monitoring are included as part of the training. Air monitoring of the Facility are conducted daily during each operating day to ensure that personnel are working in a safe environment. A detailed discussion of the air monitoring procedures is provided in **Section 3.20**.

5.6 Personnel Training

The primary objectives of the personnel training program are as follows:

- To make employees aware of the potential hazards they may encounter
- To provide the knowledge and skill training necessary to protect employee health and safety, and the environment
- To make workers aware of the purpose, and the limitations of process and safety equipment
- To ensure that workers can respond to emergencies

The personnel training program consists of initial new employee training, monthly safety meetings, and a yearly formal refresher training program conducted or coordinated by the Facility Manager.

Initial New Employee Training

Initial new employee training is conducted for new employees under the direction of the Facility Manager. Facility personnel are trained in accordance with Title 40 CFR § 265.16. Specifically, personnel must successfully complete a program of both classroom instruction and on-the-job training that teaches them to perform their duties in a manner to comply with the requirements of Title 40 CFR § 265.16. The initial new employee training is comprehensive and is provided to new employees. The new employees are closely supervised during the first few months of working in the Facility (by experienced and senior employees including the Facility Manager and Operations Manager) to ensure they understand and follow proper procedures and protocol.

The training is broken down into two parts: Part I consists of new employee orientation provided to new employees covering corporate and Facility policies and training relevant to the Facility; and Part II training which is position / title specific training consists of OSHA, RCRA, DOT and other regulatory training. A summary of the training provided to new employees is provided on the following page on **Table 5-1**. A detailed discussion of personnel training is also provided in **Section 3.4** of this Report.

Table 5-1
Lighting Resources, LLC - Mercury Recovery Facility, Ocala, FL
Initial New Employee Training

Position Title (#)	Required Training
Part I – New Employee Orientation:	
ALL Staff	▪ Company policies and procedures ▪ Mercury Right to Know ▪ RCRA Training ▪ Pre-placement physical requirements Universal Waste Handler Training Plant tour: process and safety equipment ▪ OSHA Hazard Communication ▪ U.S. DOT Hazardous Materials Training ▪ Production tasks orientation ▪ Environmental and waste control ▪ Material handling tasks orientation
Part II – Title Specific Training:	
Facility Manager (1)	▪ 40-Hour HAZWOPER Training ▪ Air Monitoring ▪ Reasonable Suspicion Training
Operations Manager (1)	▪ 40-Hour HAZWOPER Training ▪ Air Monitoring ▪ Reasonable Suspicion Training ▪ Forklift Certification
Processing Supervisor (1)	▪ 40-Hour HAZWOPER Training ▪ Forklift Certification
Warehouse Supervisor (1)	▪ 40-Hour HAZWOPER Training ▪ Air Monitoring ▪ Forklift Certification
Logistics Coordinator (1)	▪ 24-Hour HAZWOPER Training ▪ Reasonable Suspicion Training
Office Administrator (1)	▪ 24-Hour HAZWOPER Training ▪ Reasonable Suspicion Training
Driver -CDL Class “A” (4)	▪ 24-Hour HAZWOPER Training ▪ Hazmat Endorsement
MCL / Lamp Processing Operators (2)	▪ 24-Hour HAZWOPER Training
Note: Personnel receive training on the use and types of personal protective equipment to be used at the Facility as appropriate. Further, personnel are fit tested for respirator equipment.	

Monthly Safety Meetings

Monthly safety meetings are held to reinforce and review basic safety principles. In order to maintain safety awareness Facility employees will participate in the monthly safety meetings. The topics for the monthly safety meetings will review any incidents occurring on-site during the past month and various topics taken from the *Environmental Health and Safety Plan or other sources*. Topics may include:

Site control and works zones
Hazardous chemical and waste management
Plant process and safety equipment
Resource Conservation and Recovery Act (RCRA)
Toxic Substance Control Act (TSCA)
Review of Safety Data Sheets (SDS)
Receipt, processing, and material handling procedures
U.S. DOT – Safe Transportation of Hazardous Materials
Security policies and procedures
Waste storage, staging, shipment, and disposal policies, methods, and procedures
Good housekeeping policies and procedures
Emergency Prevention and Preparedness
Waste Analysis Plan
Emergency contingency plan
Decontamination / clean-up procedures
Personal protective equipment and air purifying respirator training
Air monitoring
First aid training
Emergency site evacuation
Fire safety and fire extinguisher training
Lamp processing equipment use and safety
Forklift use and safety
Lockout / tag out procedures

Yearly Refresher Training

Facility employees will receive the OSHA 8-Hour HAZWOPER refresher course to ensure that employees maintain current with their OSHA HAZWOPER certification.

U.S. DOT Safe Transportation of Hazardous Materials – The refresher course is currently on an every three-year refresher schedule. Additional training as required due to changes in the laws. New employees are scheduled within the 6 months of their start date.

OSHA HAZ Com is included in the US DOT Safe Transportation However, new employees may take it separately to complete it within the 6-month period.

6.0 QUALITY CONTROL PLAN

This Quality Control Plan has been prepared to comply with applicable state and federal regulations including but not limited to 62-737.800(f) F.A.C. The Quality Control Plan includes the following components:

- Operating Practices and Procedures
- Facility Inspections
- Waste Identification Procedures
- Sampling and Analysis Procedures
- Air Monitoring and Emission Control Procedures

Lighting Resources ensures compliance by adherence to its materials handling and processing procedures, inspections and monitoring programs, and aggressive waste acceptance and analysis procedures.

6.1 Operating Practices and Procedures

Quality assurance practices commence at the time of materials receipt. Drivers conduct inspection of materials offered for transport at customer facilities prior to acceptance. Unauthorized waste materials are be refused. Containers are inspected for safety and compliance with applicable regulations. Lighting Resources' drivers are provided bills of lading or uniform hazardous waste manifests as appropriate. Additionally, material labels compliant with Title 40 CFR § 273 and Title 49 CFR § 172 are provided to the drivers and/or generators.

Materials delivered to the Facility by common carrier or directly by the generator are inspected for acceptance at the receiving dock by trained Lighting Resources personnel. Materials that are not authorized or are non-compliant due to improper containment, labeling, or other reason, are refused and the generator is immediately notified. A detailed waste acceptance program and load checking program are described in detail in **Section 3**.

Deliveries to the Facility are scheduled in advance when possible so that necessary tracking and inventory forms are available upon arrival. Material transport and receipt documents are reviewed and signed by the Branch Manager, Operations Manager, Warehouse Supervisor, or Office Administrator for accurate preparation and completion. Information for materials received is entered into the Lighting Resources waste tracking database. Paper copies of documents, bills of lading, uniform hazardous waste manifests, inventory count sheets, etc., are maintained on site for a minimum of three (3) years.

Daily Operations Procedural Review

The Lighting Resources uses software for customer relationship management (CRM) that records all details of material received at the facility. The information is available in report detail by types of material, customer, quantity and sales. Additionally, the Facility Manager or another supervisor prepares a daily inspection report. (See **Appendix D**). Reports are maintained on site for a minimum of three (3) years.

Training

In-depth personnel training is provided to employees and covers Facility operations and procedures, applicable job tasks, and regular health and safety training. Personnel training is discussed further in **Section 3.4** and **Section 5.6** of this Report.

Equipment Performance

Equipment performance is monitored on a daily basis. Visual and audible keys are the primary indicators that the machinery is functioning as designed. Visual inspection of the discharge of glass readily identifies malfunctions; reduction in glass clarity or excessive lamp metals mixed in the glass discharge provides immediate indication that the Balcan MP8000 may not be functioning correctly.

The Balcan MP8000 has a number of catchment drawers designed to capture materials that are not properly processed or passed through the system. These catchment drawers are removed from the machine and emptied as needed and reviewed as part of the end-of-shift equipment inspection.

The Facility will use the Jerome Model 431X Mercury Vapor Analyzer as its mercury vapor detection device or another similar model. Designated employees have been trained in its use and adjustment. Mercury vapor level readings are taken daily and provide indications regarding filter status and operation. If significantly increased mercury readings are observed, a special inspection is conducted immediately to determine the cause of the elevated reading and to perform necessary repairs or adjustments. The mercury vapor analyzer requires annual calibration and parts replacement, if necessary. Lighting Resources will return the meter to the an approved company for the necessary maintenance and calibration within the manufacturers' recommended service interval and will maintain the appropriate calibration and service records on site. Please refer to **Section 3.20** for more detailed information on air monitoring and emission control procedures.

Additionally, routine sampling and laboratory testing is conducted to analyze for residual mercury levels on the processed lamp glass and metals. If elevated levels are observed, an investigation is conducted to determine the cause and perform any necessary mitigation (please refer to **Appendix E** for the *Sampling and Analysis Standard Operating Procedures*).

6.2 Facility Inspections

Lighting Resources personnel conducts regular inspections of the Facility to ensure personnel health and safety, site security, proper operational practices, acceptable equipment operation, and compliance with applicable regulations. The Inspection Plan is presented in **Section 8**, and copies of inspection and monitoring forms are provided in **Appendix D**.

6.3 Waste Identification Procedures

The waste identification procedures are designed to ensure that Facility personnel possess sufficient information regarding the properties of the waste streams, and to ensure the safe handling, staging, and processing of materials in a manner that is protective of human health and the environment. The specific universal hazardous wastes handled and/or processed at the Facility is well defined and characterized.

Bills of lading and/or manifests are required for incoming material loads. Facility personnel review paperwork for each incoming load at the receiving / loading dock area, to ensure they are in proper order and accurately reflect what is being delivered. Further, loads are visually inspected to ensure there are no unauthorized materials, materials are properly contained, and containers are appropriately labeled (please refer to **Section 3** for a detailed discussion on waste acceptance procedures and load checking). Following inspection/staging the material containers are moved into the various material storage areas on-site for either processing (i.e., lamps) or transfer offsite (i.e., mercury containing devices, ballasts, and batteries). Containers are identified as follows:

- Intact mercury containing lamps (Area A)
- Crushed mercury containing lamps (Area A)
- Mercury containing devices (Area A)
- Batteries (Area A)
- Lamp ballasts (Area A)
- Mercury containing phosphor powder (Area B)
- Separated glass (Area C)
- Separated metals (Area C)

The above-listed materials are readily identifiable and do not possess other hazardous constituent or chemical characteristics of concern other than that associated with mercury.

Incoming Materials

Data from both the U.S. EPA and the fluorescent and HID lamp manufacturers indicate that the types of lamps processed at the Facility normally exceed the 0.20 mg/kg TCLP toxicity threshold for mercury. Incoming lamps will therefore are assumed to be hazardous wastes, and testing of the incoming lamp materials will not be routinely conducted. Other materials (mercury containing devices, ballasts, and batteries) are accepted on-site for transfer to another facility for reclamation, treatment, recycling, or disposal (please refer to **Section 3** for further information).

6.4 Sampling and Analysis Procedures

In accordance with 62-737.840 F.A.C., Lighting Resources conducts routine sampling and analyses of the processed lamp materials prior to shipment offsite for further processing, reclamation, recycling, or disposal. A brief summary of the sample collections and testing that are performed is provided below. A detailed sampling and analysis plan is provided in **Appendix E**.

Sampling and Testing

Lighting Resources takes daily physical samples of the separated glass and metal materials, individually, at the point at which the materials exit the lamp processing equipment. Collected samples are representative of the materials processed during the day they were collected. At the beginning of each week or more often if operations warrant, the prior week's daily samples are consolidated into one weekly composite sample and submitted for chemical analysis of total mercury content (or alternatively TCLP mercury content) using an approved EPA methodology. The weekly composite sample is prepared by thoroughly mixing equal amounts of the daily samples into a single container. Sampling and testing is performed for both separated glass and metals individually. The results of this analysis shall be considered the *weekly composite sample of process operations*. The **total mercury content of the *weekly***

composite sample of process operations **must be less than 3 parts per million (ppm)**, if the tested materials are to be shipped to a facility other than a mercury reclamation facility.

Twelve (12)-Week Average of Mercury Content

In accordance with 62-737.840 F.A.C., Lighting Resources maintains a 12-week average value of the levels of mercury contained in the processed glass and processed metals. The 12-week average is a rolling average calculated using the most recent 12-weekly test results obtained from the weekly tested composite samples. The **12-week average for total mercury content must be less than 1 ppm**, if the tested materials are to be shipped to a facility other than a mercury reclamation facility.

6.5 Air Monitoring and Emission Control Procedures

Internal air quality is routinely monitored for mercury emissions in the air to ensure that personnel are working in a safe environment, and to ensure that the air pollution control equipment is operating properly. Lighting Resources will monitor specific areas of the Facility on a daily basis to ensure that the mercury levels are well below the OSHA PEL of 0.1 mg/m^3. Specifically, Lighting Resources shall maintain levels below a threshold of 0.05 mg/m3 and ensure Facility levels do not exceed this limit. The threshold limit of 0.05 mg/m^3 is the recommended exposure limit (REL) established by the National Institute for Occupational Safety and Health (NIOSH). The NIOSH REL of 0.05 mg/m^3 is a time weighted average for up to a 10-hour workday and a 40-hour workweek.

The areas where monitoring is performed are shown on **Figure 7** (presented in **Section 3.20**). Lighting Resources takes ambient air readings using a Jerome 431 X mercury analyzer or other similar equipment. Air readings are taken in the Administrative Office area and in Areas A, B, and C. The air monitoring form will list the sampling location and air monitoring readings obtained. Air monitoring is performed daily throughout each workday.

In the event there are spikes in the mercury levels, the cause is determined, and appropriate remedial action is taken. A spike would typically indicate an excess lamp breakage in a given shipment with poor containment, an equipment malfunction or system leak. Air filtration media is deemed "saturated" and is replaced when mercury emissions reach the threshold limit of 0.05 mg/m3. Frequent testing in multiple locations of the Facility during operations will ensure that malfunctions are corrected promptly.

Lighting Resources also has an extensive floor maintenance program to minimize potential contamination of the plant floor and use sticky mats to further minimize potential contamination. Please refer to **Section 3.20** for a more detailed discussion of the air monitoring and emission control procedures.

7.0 CLOSURE PLAN

This Closure Plan has been prepared to meet the closure requirements of 62-737 F.A.C. A closure date for the Lighting Resources Facility has not been established and it is anticipated that the Facility will remain open and operate indefinitely. For purposes of this closure plan, a nominal date of twenty years from issuance of this permit has been chosen; therefore, the date for which closure activities would begin was assumed to be January 2042. It is recognized, however, that the term of permits issued by the DEP is five (5) years and will require periodic renewal.

7.1 Closure Procedures

It is anticipated that the Facility will remain open and operate indefinitely. However, for purposes of this Closure Plan the procedures for final closure of the Facility are the following:

- Notification of intent to close will be provided by Lighting Resources to DEP and to current clients at a minimum of 30 days prior to initiating any closure activities.
- Cease acceptance of universal wastes and lamp materials. Advance notice to clients will be provided so that they can redirect their materials to other authorized / permitted facilities.
- Complete the processing of existing inventory of lamps (MCLs); the sorting/segregation and containerization of other materials for loadout (batteries, ballasts, mercury containing devices, lamp glass, lamp metals, and phosphor powder, etc.).
- Transport inventory of remaining waste materials not processed by Facility, co-products and recovered materials to appropriate outlets, customers and authorized off-site treatment, recycling, or disposal sites.
- Visually inspect containment systems, floors, walls, ceilings, and equipment surfaces inside the Facility building for evidence of contamination. If visual contamination is suspected then sampling, analytical testing, and decontamination procedures will be followed in accordance with procedures outlined in **Section. 7.3** and **Appendix E** of this Report.
- If no visual contamination is evident, the hazardous materials containment systems will be steam washed. The resulting wash water from this activity will be sampled, analyzed, and disposed of in accordance with applicable regulations.
- Lighting Resources will submit appropriate certification of closure to DEP.

7.2 Maximum Inventory Estimate

With the exception of the unprocessed MCLs (whole lamps) and lamp glass cullet, the maximum inventory to be stored at the Facility was estimated in drum equivalents and by weight. Drum equivalents and estimated weights (shown in parenthesis) were used in order to prepare the closure cost estimate. Most of the service vendors provided pricing based on number of drums or poundage. The maximum storage limits based on physical space limitations were used to estimate the volumes presented in **Table 7-1** on the following page.

1Table 7-1 Lighting Resources, LLC – Mercury Recovery Facility, Ocala, FL Maximum Material Inventory at Closure		
Material	**Volume Estimate**	**Assumptions**
Mercury Containing Devices (MCDs)	Four (4) 55-gallon drums (750 lbs. ea. for 3,000 lbs)	Assumed volume based on maximum available on-site storage for MCDs (refer to **Table 3-2** in Section 3 of this Report for full description of assumptions)
Mercury Containing Lamps (MCLs):		
Unprocessed MCLs	140,000 type T-12, 4-ft fluorescent lamps (90,000-lbs)	Volume was intentionally assumed higher (140,000 MCLs) than the maximum on-site storage of 139,104 lamps in order to provide a conservative closure cost estimate (refer to **Table 3-2** in Section 3 of this Report for full description of assumptions)
Processed / Crushed MCLs	Fifty-Six (56) 55-gallon drums (500 lbs. ea. for 28,000-lbs)	Assumed volumes based on maximum available on-site storage (refer to **Table 3-2** in Section 3 of this Report for full description of assumptions)
Phosphor Powder (containing mercury)	Thirty-two (32) 55-gallon drums (750 lbs ea. for 24,000-lbs)	
Separated Lamp Glass (cullet)	Four (4) Roll offs (<30,000 x 4 = 120,000 lbs.)	
Separated Lamp Metals	Sixty (60) 55-gallon drums (750 ea. for 45,000-lbs)	
Lamp Ballasts:		
Non-PCB Lamp Ballasts	Twenty-eight (28) 55-gallon drums (750 ea. for 21,000-lbs)	Assumed volumes based on maximum available on-site storage (refer to **Table 3-2** in Section 3 of this Report for full description of assumptions.
PCB Lamp Ballasts	Two(2) 55-gallon drums (1,500-lbs)	
Batteries:		
Large and small type batteries	Forty-eight (48) 55-gallon drum (750 lbs. each for 36,000 lbs.)	Assumed volumes based on maximum available on-site storage (refer to **Table 3-2** in Section 3 of this Report for full description of assumptions)

7.3 Decontamination Procedures

A detailed discussion of decontamination procedures is provided in **Appendix E** of this Report. A summary of the decontamination procedures is outlined below:

- Facility Equipment: If contamination is visually observed or suspected on equipment, the following steps will be taken to decontaminate the affected equipment:
  - Disassemble equipment if possible.
  - Wash thoroughly with ES7X® laboratory detergent (or approved equivalent) and hot tap water using a brush to remove particulate matter or surface film.
  - Rinse thoroughly with deionized water and allow to air dry.
  - Using wipe samples confirm equipment is completely decontaminated.

- If laboratory results of wipe samples confirm equipment is clean, then proceed to next step. If results indicate equipment is still contaminated, repeat above steps as necessary until a clean confirmation is obtained.
- Wrap equipment completely with plastic ("shrink") wrap or containerize to prevent contamination during staging and transport.

- Area B Lamp Processing Room Equipment: The lamp process equipment and associated components in the Lamp Processing Room (Area B) will be disassembled, cleaned, using the methods described above, and either sold to third parties for reuse, or recycled as scrap materials.

- Areas A, B, and C Surfaces: Wipe samples of all surfaces (including but not limited to floors, walls, and ceilings) will be collected from all material handling, processing, and staging areas (i.e., Areas A, B, and C) throughout the Facility and will be analyzed for mercury. If there are hazardous levels of mercury, the following steps will be followed to decontaminate:

  For solid surfaces (including floors and half walls):

  - Using a solution of deionized water and mercury cleaning chemicals (e.g., ES7X® or approved equivalent), wipe and mop affected surfaces.
  - Take wipes samples and test subsequent to cleaning / decontamination efforts.
  - If laboratory results of wipe samples confirm surface area is clean, then stop. If results indicate surface is still contaminated, repeat above steps as necessary until a clean confirmation is obtained. This step will be repeated until the areas have been tested clean.

  For areas with batting / insulation (including ceilings and areas above half walls):

  - If batting is intact, vacuum surface using a mercury HEPA / ULPA filtered vacuum (i.e., use only a mercury removal vacuum that has appropriate filters).
  - Take wipe samples of the vacuumed surface to confirm if surface is clean.
  - If laboratory results of wipe samples confirm surface is clean, then stop. If results indicate surface is still contaminated, repeat above steps as necessary until a clean confirmation is obtained.
  - If batting is not intact, completely remove batting and containerize in lined 55-gallon drums. Transport drums using a licensed hazardous waste hauler to a facility authorized and permitted to receive such materials.
  - Vacuum the exposed surface from where the batting was removed using the mercury HEPA / ULPA filtered vacuum that has been exposed from the area where batting was removed using a mercury HEPA / ULPA filtered vacuum (i.e., use only a mercury removal vacuum that has appropriate filters).
  - Take wipe samples of the vacuumed surface in area where batting was removed to confirm if surface is clean.
  - If laboratory results of wipe samples confirm surface is clean, then stop. If results indicate the surface is contaminated, repeat above steps as necessary until a clean confirmation is obtained.

- All Other Areas: If contamination is visually observed or suspected on other areas specifically not listed above, steps will be taken to decontaminate and clean the affected area using the appropriate methods described above (and detailed in **Appendix E**) and repeated as necessary until the affected area tests clean.

If contamination is not observed from sampling and testing activities (as outlined above and in **Appendix E**), the subject area(s) will be cleaned using the best available method for proper decontamination. The lamp processing and storage areas will be cleaned using a combination of wiping with water and vacuuming with a treated carbon system. Walls, floors, and other surfaces (electrical conduits, light switches, outlets, tops of suspended lighting fixtures, etc.) will be wiped, swept, vacuumed, and water or steam washed. If needed, solutions of dilute nitric acid, bleach, or degreasing compound will be used. The rinsate from washing will be collected, sampled, analyzed, and disposed of in accordance with applicable regulations.

Confirmation of Sampling Plan for Structures, Equipment, Buildings and Outdoor Areas

Confirmation sampling and testing will be performed in accordance with the procedures outlined in the *Sampling and Testing Standard Operating Procedures* (see **Appendix E**). To ensure the Facility has been completely decontaminated, a series of wipe samples and tests will be performed. A detailed *Closure Sampling and Testing Plan* that would include the methods, sample location diagrams, and frequency for sampling and testing can be submitted to DEP in advance of beginning closure activities for review and approval.

Confirmation of Soil Sampling

Confirmation sampling and testing of soils will be performed in accordance with the procedures outlined in the *Sampling and Testing Standard Operating Procedures* (see **Appendix E**). Areas determined to be contaminated will be over excavated, containerized, and transported offsite by a licensed hazardous waste hauler to a RCRA Subtitle C landfill facility authorized and permitted to dispose of such materials. A detailed Closure Sampling and Testing Plan that would include the methods, sample location diagrams, and frequency for sampling and testing can be submitted to DEP in advance of beginning closure activities for review and approval.

Analytical Test Methods/Standards

Analytical methods for testing mercury or other contamination are the EPA (RCRA- SW 846) recommended methods. After decontamination, process equipment, vehicles, drums, other containers will be removed from the building, and waste materials, hazardous or non-hazardous will be managed in accordance with applicable regulations.

7.4 Closure Schedule

For purposes of this closure plan, a nominal date of twenty years from issuance of this permit has been chosen; therefore, the date for which closure activities would begin was assumed to be May 2042. Milestones for the completion of closure activities are listed in **Table 7-2** on the following page. The estimated time to complete closure is approximately four months. Therefore, the Facility does not foresee any problems complying with required closure timeframe of 180-days.

Table 7-2 Lighting Resources, LLC – Mercury Recovery Facility, Ocala, FL Closure Schedule		
Activity	**Time to Complete**	**Assumptions**
Notification given to FL-DEP that Facility will be closing	*(advance notice will be given prior to closure)*	*Conservatively* assume a 60-day advance notice
Facility Closure Activities Begin May 1, 2042:		
Final volume of processed materials and universal wastes transported offsite to other facilities for further processing, recycling, and/or disposal	Two weeks (10-days)	
Dismantling / dis-assembly of lamp process equipment	Two weeks (10- days)	Assumes 2-man crew on site
Decontamination of dismantled lamp process equipment, containers, floors, and walls (includes sampling and lab testing of rinsate)	Three weeks (15-days)	Assumes 2-man crew working 5-days on site + total of 10-days for lab testing
Sampling / testing of soils	Six (6) days	Assumes 1-person / 1-day on site to collect samples + total of 5-days for lab testing
Removal / transport of dismantled / decontaminated equipment and containers to a metal recycler	Two weeks (10-days)	
Removal / transport of contaminated materials / wastes (sample wipes, rinsate, filters, etc.) to a treatment / disposal facility	Two weeks (10-days)	
Conduct final site inspection, and prepare and submit Closure Certification Report to DEP	Three weeks (15-days)	
TOTAL CLOSURE TIME: 15-weeks and 1-day	**CLOSURE COMPLETION DATE: Mid- to Late August 2042**	

7.5 Closure Cost Estimate

The closure cost estimate for the Lighting Resources Facility has been prepared based on the following worst-case conditions:

- Maximum Facility storage volumes for materials
- Materials will be transferred off-site to a third-party reclamation, treatment, recycling, or disposal facility
- No salvage value for decommissioned structures or equipment
- Materials with potential economic value are assumed to have zero-dollar value
- Decommissioning, decontamination, and sampling / testing will be performed by a third-party consultant

The closure cost estimate is adjusted annually for inflation using US BLS CPI. Further, the closure cost estimate is amended whenever there are changes in operating plans or Facility design that may affect the closure plan. The closure cost estimate is provided on **Table 7-3** on the following pages. The cost estimate electronic spreadsheet file with backup data is also provided in **Appendix F** (includes Excel spreadsheet file on USB Flash Drive and service provider pricing sheets).

TABLE 7-3
LIGHTING RESOURCES, LLC - OCALA, FL
MERCURY RECOVERY FACILITY DEP PERMIT APPLICATION _ REVISION NO. [1]
CLOSURE COST ESTIMATE (APRIL 2012)

Line Item #	Description		Service Provider / RS Means Name	Service Provider / RS Means Location	Units	Quantity	Unit Cost	Total Cost	Notes
REMOVAL OF WASTE & RECYCLABLE MATERIAL INVENTORY: *(assume worst cast scenario (i.e., maximum inventory))*									
Mercury-Containing Lamps (MCLs):									
1	**Unprocessed MCLs**	**Transport** by Hauler (unlicensed) to DEP permitted mercury recovery / reclamation facility	HUB	Chicago, IL	semi-trailer	6	$525.00	$3,150	Conservatively assumed 140**,000 T-12 / 4-ft lamps —** however, the calculation of storage capacity yielded 139,104 lamps, and to be conservative in this cost estimate it was assumed that 140,000 lamps would need handling/ removal from site. HUB contracts locally with a transporter in Jacksonville, FL; 2.8 semi-trailer trucks needed based on calculation of 48 pallets per truck, 8 lamp boxes per pallet, 69 lamps per box, 552 lamps per pallet (69 x 8), 26,496 lamps per trailer -truck (552 lamps x 48 pallets); therefore the 6th truck will have space for 33 addtl pallets. Contact- Evan Singley (with HUB) 630.437.6053
		Processing by DEP permitted mercury recovery / reclamation facility (cost is all incl.)	AERC Recycling Solutions	West Melbourne, FL	linear foot	560,000	$0.035	$19,600	140**,000 T-12 / 4-ft lamps** = (140,000 x 4 ft) = 560,000 linear feet
2	**Unprocessed: Crushed / Unintentially Broken MCLs**	**Transport** by hazardous waste licensed hauler to an authorized, state permitted mercury recovery / reclamation facility	Freehold Cartage / RS Means	Bartow, FL	**see note**	**see note**	$2,586.53	$2,587	**Fifty-six (56) 55-gallon drums** will have to be transported. Freehold Cartage will most likely be used, however to be conservative the pricing for transportation was obtained from **RS Means Environmental Remediation Cost Data (2006)**. The Means pricing was adjusted from 2006 dollars to 2012 dollars using DEP inflation factors (refer to DEP website). Assumed travel distance of 500 miles from Ocala, FL to Williamston, SC. The RS Means minimum shipping charge of $2,587 (incl. inflation) - RS Means Cost Code #33-19-0202 was greater than the per mile charge of $1,255 ($2.47 per mile @ 500 miles, incl. inflation) - RS Means Cost Code #33-19-0213; therefore, the cost of $2,587 was used. Refer to Excel File (for RS Means costs) saved on disk contained in Appendix F within the Engineering Report.
		Processing by an authorized, state permitted mercury recovery / reclamation facility (cost is all incl.)	Waste Management Lamp Tracker Inc.	Williamston, SC	lbs	28,000	$1.05	$29,400	Assume **500 lbs** per 55-gal drum x 56 **drums** = 28**,000 lbs.**
3	**Phosphor Powder**	**Transport** by hazardous waste licensed hauler to DEP permitted mercury recovery / reclamation facility	Freehold Cartage	Bartow, FL	55-gal. drum	32	$52.00	$1,664	Minimum 9-drums per transport at $50 per drum plus 4% surcharge fee (equals a total of $52 per drum). Each drum assumed to weigh 750-lbs each. Freehold contact - Andrew / Mike Avery, 863.287.1830
		Processing by DEP permitted mercury recovery / reclamation facility (cost is all incl.)	Veolia Environmental Services	Tallahassee, FL	55-gallon drum	32	$254.25	$8,136	$225 per drum plus 13% surcharge (equals a total of $254.25 per drum)
4	**Separated Glass Cullet** (i.e., passes TCLP for Mercury)	**Test** material to confirm it passes TCLP for Mercury	Eurofins	Tampa, FL	1-test per sample	4	$40.00	$160	EPA Method 7470; Columbia Analytical Services contacted for pricing at 1-800-695-7222
		Transport by Hauler to Marion County Baseline Landfill for disposal	Waste Pro	Ocala, FL	Rolloff	4	$200.00	$800	Waste Pro Account # 026715 Phone - 352-6243100
		Landfill Disposal at Marion County - Baseline Landfill	Baseline Landfill	Marion County, FL	ton	60	$42.00	$2,520	Marion County - Baseline Landfill charges a fee of $42/ton. Based on published data, the unit weight of crushed cullet glass <= to 30,000 lbs per rolloff; therefore to be conservative a rolloff container was assumed to weigh 30,000-lbs. The total weight is therefore equal to: (4 rolloffs **x 30,000-lbs/rollfoff) = 120,000-lbs** or **60-tons**.
		Test material to confirm it passes TCLP for Mercury	Eurofins	Tampa, FL	1-test per sample	4	$40.00	$160	TOTALL Metal Recycling provides free hauling of metal end caps and pays Lighting Resources a fixed dollar amount based on a buy-back agreement (ranges from $5,800 to $12,000 - - depending upon

TABLE 7-3
LIGHTING RESOURCES, LLC - OCALA, FL
MERCURY RECOVERY FACILITY DEP PERMIT APPLICATION _ REVISION NO. [1]
CLOSURE COST ESTIMATE (APRIL 2012)

Line Item #	Description		Service Provider / RS Means		Units	Quantity	Unit Cost	Total Cost	Notes
			Name	Location					
5	**Separated Metal End Caps / Metal Comp.** (i.e., passes TCLP for Mercury)	**Transport** by Hauler to an authorized metals reclaimer	FAMce	Cedartown, GA	55-gallon drum	60	**no charge**	**see note**	Each drum assumed to weigh 750-lbs. **PLEASE refer to Appendix F** for a copy of an email in the event of Facility closure (LRL - Ocala, FL), FAMCe take the materials (i.e., metal end caps, non-pcb ballasts, e-waste, dry-cell batteries and lead acid batteries) from Lighting Resources in Ocala, Florida at no cost.
		Metals Recycling by authorized recycler / reclaimer	FAMce	Cedartown, GA	55-gallon drum	60	**no charge**	**see note**	
Mercury-Containing Devices (MCDs):									
6	**MCDs: Thermometers, Thermostats, Switches, Relays and Manometers**	**Transport** by Hauler (unlicensed) to DEP permitted mercury recovery / reclamation facility	Veolia Environmental Services	Tallahassee, FL	55-gallon drum *	4	$56.50	$226	* $50 per drum plus 13% energy and security surcharge (equals a total of $56.50 per drum). Each drum assumed to weigh 750-lbs.
		Processing by DEP permitted mercury recovery / reclamation facility (cost is all incl.)	Veolia Environmental Services	Tallahassee, FL	55-gallon drum *	4	$242.95	$972	* $215 per drum plus 13% energy and security surcharge (equals a total of $242.95 per drum). Each drum assumed to weight 750-lbs.
Lead Acid Batteries:									
7	**Small / Other Type Batteries: Alkaline, Gel Cells, Lead Acid, Lithium-Ion, Magnesium, Mercury, Ni-Cad, Ni-MH, and Silver Oxide and Automotive & Large Equipment Lead Acid Batteries**	**Transport** by a licensed hazardous waste hauler to a facility permitted and authorized to receive and process such battery type materials	Uber Freight/		**see note**	**see note**	$2,587.00	$2,587	**Forty-eight(48) 55-gallon drums** will have to be transported. Uber Freight quote 1-4-2022 is $941. **Appendix F** includes Uber quote. **Forty-eight (48) drums**, each drum assumed weight of 750 lbs = (48 x 750 lbs) = 36,000 lbs. **Refer to Appendix F** contained within the Engineering Report for an email from Asset Recycling to Lighting Resources, LLC , stating that in the event of Facility closure (LRL - Ocala, FL), Asset Recycling to take the materials (i.e., metal end caps, non-pcb ballasts, e-waste, dry-cell batteries and lead acid batteries) from Lighting Resources in Ocala, Florida.
		Metals Reclaimer by a facility permitted and authorized to receive and process such battery type materials	Asset Recycling	Dalton, GA	lbs	18,000	**no charge**	**see note**	
Light Ballasts:									

TABLE 7-3
LIGHTING RESOURCES, LLC - OCALA, FL
MERCURY RECOVERY FACILITY DEP PERMIT APPLICATION _ REVISION NO. [1]
CLOSURE COST ESTIMATE (APRIL 2012)

Line Item #	Description		Service Provider / RS Means: Name	Service Provider / RS Means: Location	Units	Quantity	Unit Cost	Total Cost	Notes
8	**Unprocessed PCB Light Ballasts**	**Transport** by a licensed hazardous waste hauler to a facility permitted and authorized to receive / process PCB Ballasts	Freehold Cartage / RS Means	Chicago, IL	**see note**	**see note**	$3,211.00	$3,211	**Ten (10) 55-gallon drums** will have to be transported. Freehold Cartage will most likely be used, however to be conservative the pricing for transportation was obtained from RS Means Environmental Remediation Cost Data (2006). The Means pricing was adjusted from 2006 dollars to 2012 dollars using DEP inflation factors (refer to DEP website and Excel File saved on disk in **Appendix F** of the Engineering Report). Assumed travel distance of 1,300 miles from Ocala, FL to TOTALL Metal Recycling in Granite City, IL (first stop, see below Non-PCB Ballasts, Line Item # 10) and to Wisconsin Ballast in Muskego, WI (second stop, PCB Ballasts Line Item #9). The RS Means per mile charge of $3,211 - Cost Code #33-19-0240 ($2.47 per mile @ 1,300 miles, incl. inflation) was greater than the minimum shipping charge of $2,910 - Cost Code #33-19-0203 (see Excel File on disk for RS Means Costs located in **Appendix F** in the Engineering Report); therefore, the cost of $3,211 was used.
		Processing by a facility permitted and authorized to receive / process PCB Ballasts	Wisconsin Ballast	Muskego, WI	lbs	7,500	$0.36	$2,700	**Ten (10) 55-gal drums**; assumed one (1) 55-gallon drum of ballast material weighs **750 lbs.**; total weight = (10 x 750) = 7,500 lbs. Unit cost assumes incineration.
9	**Unprocessed Non-PCB Light Ballasts**	**Transport** by a licensed hazardous waste hauler to a facility permitted and authorized to receive / process Non-PCB Ballasts	Freehold Cartage / RS Means	Chicago, IL	55-gallon drum	30	**no charge**	**see note**	Thirty (30) 55-gal drums; assumed one (1) 55-gallon drum of ballast material weighs 750 lbs.; total weight = (30 x 750) =22,500 lbs. Transport of the Unprocessed Non-PCB Light Ballasts will be combined in the same trailer truck with the transport of Unprocessed PCB Light Ballasts (Line Item # 9) since Granite City, IL is en route to the Wisconsin Ballast facility located in Muskego, WI.
		Processing by a facility permitted and authorized to receive / process Non-PCB Ballasts	TOTALL Metal Recycling	Granite City, IL	lbs	22,500	**no charge**	**see note**	**Thirty (30) 55-gal drums**; assumed one (1) 55-gallon drum of ballast material weighs **750 lbs.**; total weight = (30 x 750) = 22,500 lbs. PLEASE refer to Appendix F contained within the Engineering Report for a copy of a letter from TOTALL Metal Recycling to Lighting Resources, LLC , stating that in the event of Facility closure (LRL - Ocala, FL), TOTALL Metal Recycling will continue to take the materials (i.e., metal end caps, non-PCB ballasts, e-waste, dry-cell batteries and lead acid batteries) from Lighting Resources in Ocala, Florida at no cost, and provide free pickup of the metal end caps and non-PCB ballasts. TOTALL Metal Recycling Contact - Matt VanDorn, phone number 618-877-0585.
							Subtotal:	**$77,672**	
FACILITY DECOMMISSIONING & DECONTAMINATION:									
Dis-Assembly & Salvage of BALCAN MP8000 Process Equipment: *(list below)*									
10	→ Dis-Assembly	Labor to **dis-assemble and pack** for later removal by metal reclaimer	Shaw Environmental	Winter Garden, FL	hours	160	$65.00	$10,400	2-man crew for 10-days; OSHA Level C PPE; decontamination labor and costs are below.
	→ Haul for Salvage	**Transport and Reclamation** by Metal Reclaimer	TOTALL Metal Recycling	Granite City, IL	**see note**	**see note**	**no charge**	**see note**	TOTALL Metal Recycling provides free hauling and pays Lighting Resources a fixed dollar amount based on buy-back agreement for all metal end cap materials and will pickup, transport, and recycle at no cost all equipment / metals.
Removal & Decontamination of Any Hazardous Residue: *(list below)*									

TABLE 7-3
LIGHTING RESOURCES, LLC - OCALA, FL
MERCURY RECOVERY FACILITY DEP PERMIT APPLICATION _ REVISION NO. [1]
CLOSURE COST ESTIMATE (APRIL 2012)

Line Item #	Description		Service Provider / RS Means		Units	Quantity	Unit Cost	Total Cost	Notes
			Name	Location					
11	→ Containers	**Surface Wipe** sampling to det w/ rinsate	Shaw Environmental	Winter Garden, FL	hours	16	$80.00	$1,280	2-man crew for 1-day; OSHA Level C PPE.
		Decontaminate w/ rinsate	Shaw Environmental	Winter Garden, FL	hours	20	$80.00	$1,600	2-man crew for 1-day; OSHA Level C PPE.
		Sample rinsate	Shaw Environmental	Winter Garden, FL	hours	2.5	$80.00	$200	20 samples by 2-man crew
		Test rinsate (lab cost)	Columbia Analytical Services	Jacksonville, FL	1-test per sample	20	$40.00	$800	EPA Method 7470; Columbia Analytical Services contacted for pricing at 1-800-695-7222
		Transport contaminated rinsate (leachate) by a licensed hazardous waste hauler to a Chemical Waste Landfill for disposal	Waste Management	Bartow, FL	55-gal. drum ($65 /drum + $150 pickup fee)	10	$65.00	$800	**Ten (10) 55-gallon drums** will have to be transported. Unit pricing of $65 per 55-gallon drum plus **ADDED** a $150 stop fee per pickup.
		Landfill Disposal of any contaminated rinsate (leachate) and other matls (e.g., rags, wipes, PPE, etc.).	Waste Management - Emelle Landfill	Emelle, AL	55-gallon drum ($248 /drum + $220 profile fees)	10	$248.00	$2,700	**Ten (10) 55-gallon drums** will have to be disposed of. Unit pricing of $248 per 55-gallon drum (assumes half liquid + half rags) plus **ADDED** ADEM and WM Profile Fees of $170 and $50, respectively.
12	→ Equipment	**Decontaminate** w/ rinsate	Shaw Environmental	Winter Garden, FL	hours	20	$80.00	$1,600	2-man crew for 1-day; OSHA Level C PPE.
		Sample rinsate	Shaw Environmental	Winter Garden, FL	hours	2.5	$80.00	$200	20 samples by 2-man crew
		Test rinsate (lab cost)	Columbia Analytical Services	Jacksonville, FL	1-test per sample	20	$40.00	$800	EPA Method 7470; Columbia Analytical Services contacted for pricing at 1-800-695-7222
		Transport contaminated rinsate (leachate) by a licensed hazardous waste hauler to a Chemical Waste Landfill for disposal	Waste Management	Emelle, AL	55-gal. drum ($65 /drum + $150 pickup fee)	10	$65.00	$800	**Ten (10) 55-gallon drums** will have to be transported. Unit pricing of $65 per 55-gallon drum plus **ADDED** a $150 stop fee per pickup.
		Landfill Disposal of any contaminated rinsate (leachate) and other matls (e.g., rags, wipes, PPE, etc.).	Waste Management - Emelle Landfill	Emelle, AL	55-gallon drum ($248 /drum + $220 profile fees)	10	$248.00	$2,700	**Ten (10) 55-gallon drums** will have to be disposed of. Unit pricing of $248 per 55-gallon drum (assumes half liquid + half rags) plus **ADDED** ADEM and WM Profile Fees of $170 and $50, respectively.
13	→ Walls, Ceiling, & Floor	**Decontaminate** w/ rinsate	Shaw Environmental	Winter Garden, FL	hours	32	$80.00	$2,560	2-man crew for 2-days; OSHA Level C PPE. Main area to be decontaminated and tested is the Processing Area (70.6' x 51.6')
		Sample rinsate	Shaw Environmental	Winter Garden, FL	hours	6	$80.00	$480	48 samples by 2-man crew
		Test rinsate (lab cost)	Columbia Analytical Services	Jacksonville, FL	1-test per sample	48	$40.00	$1,920	EPA Method 7470; Columbia Analytical Services contacted for pricing at 1-800-695-7222
		Transport contaminated rinsate (leachate) by a licensed hazardous waste hauler to a Chemical Waste Landfill for disposal	Waste Management	Emelle, AL	55-gal. drum ($65 /drum + $150 pickup fee)	34	$65.00	$2,360	**Twenty-Four (24) 55-gallon drums** will have to be transported. Unit pricing of $65 per 55-gallon drum plus **ADDED** a $150 stop fee per pickup.

TABLE 7-3
LIGHTING RESOURCES, LLC - OCALA, FL
MERCURY RECOVERY FACILITY DEP PERMIT APPLICATION _ REVISION NO. [1]
CLOSURE COST ESTIMATE (APRIL 2012)

Line Item #	Description		Service Provider / RS Means: Name	Service Provider / RS Means: Location	Units	Quantity	Unit Cost	Total Cost	Notes
		Landfill Disposal of any contaminated rinsate (leachate) and other matls (e.g., rags, wipes, PPE, debris, insulation / batting - from walls and ceiling, etc.).	Waste Management - Emelle Landfill	Emelle, AL	55-gallon drum ($248 /drum + $220 profile fees)	34	$248.00	$8,652	**Twenty-Four (24) 55-gallon drums** will have to be disposed of. Unit pricing of $248 per 55-gallon drum (assumes half liquid + half rags) plus **ADDED** Alabama-DEM and WM Profile Fees of $170 and $50, respectively.
14	→ Soils	**Sample** soil	Shaw Environmental	Winter Garden, FL	hours	10	$80.00	$800	1-person OSHA Level C PPE
		Test soil (lab cost)	Columbia Analytical Services	Jacksonville, FL	1-test per sample	6	$40.00	$240	EPA Method 7471; Columbia Analytical Services contacted for pricing at 1-800-695-7222
Preparation and Travel Time for Field Work (decontamination work)			Shaw Environmental	Winter Garden, FL	hours	16	$80.00	$1,280	2-man crew (includes developing a Health & Safety Plan and Work Plan for decontamination activities)
Field Supplies, Materials, Equipment (absorbent booms,Level C PPE HEPA vacuum, mercury vapor monitor, mercury vapor analyzer, power washer, etc.), and other Direct Expenses for decon. work			Shaw Environmental	Winter Garden, FL	lump sum	1	$3,500.00	$3,500	Wash the affected area with a mercury vapor suppression solution, such as HgX®
Removal of Decontaminated Containers & Equipment by Metal Reclaimer:									
Transport and Reclamation by Metal Reclaimer			TOTALL Metal Recycling	Granite City, IL	*semi-trailers*	3	**no charge**	**see note**	TOTALL Metal Recycling provides free hauling and pays Lighting Resources a fixed dollar amount based on buy-back agreement for metal end caps. TOTALL Metal Recycling provides trailer / containers on Site (i.e, at the Lighting Resources Ocala, FL Facility).
							Subtotal:	**$45,672**	
PREPARE CLOSURE CERTIFICATION REPORT:									
Prepare draft and final report			Shaw Environmental	Winter Garden, FL	hours	40	$140	**$5,600**	Assume final site inspection, write-up of field notes/reports, prepare two review drafts and one final draft for submission to DEP.
							Subtotal:	**$128,944**	Closure Funding Schedule Calculations
							ADD 10% Contingency:	**$12,894**	108240 / 5 = 21,648 43296 to 6/13
							TOTAL COSTS:	**$141,839**	Increase $33,599/5 - $6,720 year 1 to 12/2013

7.6 Financial Assurance Mechanism

The financial assurance that has been established for the closure of the Facility is a Trust Fund Agreement (DEP Form # 62-730.900(4)(e)). A copy of the financial assurance form is provided in **Appendix G**. During the life of the Facility, the financial assurance is revised / updated in accordance with permit modifications or changes in the closure cost estimate. Post-closure care is not included in the closure cost estimate since no wastes or waste residues will remain at the Facility after the closure activities are completed.

7.7 Closure Certification

Final closure of the Facility will be certified by the operator and a third-party professional engineer registered in the State of Florida. The closure certification will be submitted within 60 days of completion of closure activities. The third-party engineer will be present during critical points of the closure and subsequent to completing closure activities for a final site inspection.

The third-party engineer will prepare a closure certification report for submittal to DEP. The certification report will contain the following documentation:

- Volume of waste and waste residue removed
- Written description of the method of waste handling and transport
- Copies of waste manifests, shipping papers, or bills of lading for the off-site treatment, recycling, or disposal of materials (i.e., wastes, waste residues, recoverable materials) removed from the site during closure
- Written description of the decontamination, and sampling and testing methods used, including handling methods (i.e., containers, preservatives, ice chests, and chain of custody forms)
- Complete documentation of analytical test results
- Written chronological summary of closure activities and associated costs
- Photographic documentation of closure activities
- Written description of field tests performed, methods and results
- Daily field logs
- Plan drawings of sample locations and areas remediated pursuant to closure activities

8.0 INSPECTION PLAN

This section presents in **Tables 8-1** and **8-2** (on following pages) a description of the items that are routinely inspected, monitored, and maintained daily and on each operating shift. Inspections, monitoring, and maintenance activities are documented using designated Facility recordkeeping forms contained in **Appendix D**. The inspection / monitoring / maintenance forms will include but not be limited to the following:

- General housekeeping in the various areas of the building (floors and equipment are clean)
- Material inventory and determination of retention times (ensure no materials retained for greater than 10 days)
- Visual inspection of containers for labels/dates and condition
- Aisle spacing between storage/staging rows
- Lamp storage area arranged in accordance with the Plan
- First aid stations fully stocked
- Spill kits fully stocked
- Worker safety inspection (personnel are wearing appropriate personal protective equipment, “PPE,” and are conducting operations in accordance with Facility Plans
- Fire protection and control equipment is in working order and unobstructed / accessible
- Visual inspection and repairs of floors, walls, ceilings for cracks and/or gaps
- Inventory of necessary supplies (boxes, drums, filters, etc.)
- Air monitoring equipment for proper working order
- Air monitoring readings collected in each area of the building
- Routine maintenance of equipment
- Inspection, cleaning, and maintenance of Facility equipment including but not limited to the Balcan Lamp Processing Equipment (e.g., removal of debris, replacement of belts, filters, and worn parts, etc.)

Inspections are conducted daily/weekly/monthly to ensure that Facility operations are being conducted correctly and in a safe manner; tools and equipment/machinery are in proper working order; safety and emergency equipment is properly maintained and unobstructed; and the Facility is secure and undamaged. If inspections reveal operational, safety or security issues, or potential issues, the problems are documented, and corrective actions are taken immediately.

Inspections and monitoring are documented (on the appropriate forms) and signed by the personnel conducting them. Completed and signed forms are maintained at the Facility for a minimum of three (3) years. Records are made available to regulatory agencies upon request.

Table 8-1
Lighting Resources, LLC - Mercury Recovery Facility, Ocala, FL
Inspection and Monitoring Schedule

Inspection Item	Frequency
Monitoring Equipment:	
Air Emissions Monitoring Equipment and Readings	Daily
Health and Safety:	
First Aid Kit Contents / Expiration Dates	Monthly
Spill Kit Contents / Expiration Dates	Monthly
Wash Stations	Monthly
Spill Control Equipment: Brooms, Pans, Absorbents	Monthly
Respirators/Respirator Cartridges Inventory	Monthly
Emergency Contact List/Evacuation Plans	Monthly
Emergency Shower and Eye Wash	Monthly
Hearing Protection	Monthly
Protective Eye Glasses	Monthly
Fire Extinguisher Status	Monthly or after each use
Telephone / Communication Devices	Monthly
Emergency Exits	Monthly
Facility Signs	Monthly
Facility Security:	
Door Locks	Daily
Vehicle Locks	Daily
Security Fence and Gate	Daily
Log In / Log Out Procedures at Office	Daily
Area A - Lamp Staging / Storage Area:	
Overall Cleanliness	Daily
Floor Slab	Monthly
Signs	Monthly
Area Walls and Ceiling	Monthly
Aisle Space	Daily
Pallets	Daily
Container Condition	Daily
Container Closures	Daily
Containers Labeled , Dated, and Signed	Daily
Container Stacking/Storage	Daily

Table 8-1
Lighting Resources, LLC - Mercury Recovery Facility, Ocala, FL
Inspection and Monitoring Schedule

Inspection Item	Frequency
Containers Logged In	Daily
Container Status / Retention Time	Daily
Supply Storage and Inventory	Monthly
Area A - Related Material Handling, Staging, and Management Areas:	
Overall Cleanliness	Daily
Load /Unloading Areas,	Daily
Battery Sorting / Staging Area	Daily
Area Floors, Walls, and Ceiling	Daily
Area B - Lamp Processing Room & Equipment Inspection and Maintenance:	
Overall Cleanliness	Daily
Lamp Feed Table	Daily
Broken Glass	Daily
Conveyors	Daily
Conveyor Drawers (remove and empty)	Daily
Conveyor Belts (inspect for wear, damage, debris)	Daily
Universal Rumbler Drawers (check, remove, empty)	Daily
Vibrating Flat Bed Grid (check and clear)	Daily
Flexible Pipework (inspected)	Weekly
Internal Inspection (remove rumbler side panels)	Monthly
Rumbler Wheels	Weekly
Sweep Floor	Daily
Tools & Flammables put away	Daily
Trash & Cardboard picked up	Daily
Phosphor Powder Staging Area	Daily
Floors, Walls, and Ceiling	Daily
Area C – Separated Glass and Supply Storage Room:	
Overall Cleanliness	Daily
Floor Slab	Monthly
Signs	Monthly
Separated Glass Roll off Condition	Weekly
Separated Glass Roll off Log with Tipper Number Date	Daily
Separated Glass Roll off Volume Status / Retention Time	Daily
Floors, Walls, and Ceilings	Daily

Table 8-1
Lighting Resources, LLC - Mercury Recovery Facility, Ocala, FL
Inspection and Monitoring Schedule

Inspection Item	Frequency
Loading Dock Area:	
Overall Cleanliness	Daily
Drainage Grate and Sump	Daily
Pallets	Daily
Trash & Cardboard	Daily
Forklifts & Miscellaneous:	
Forklifts	Daily
Receiving & Production Workstation	Daily

DRAWINGS

Other Facility Permits

D1 Site Plat of Survey

D2 Site Plan

D3 Building Layout

D4 Lamp Process Equipment Plan View

D5 Site Traffic

D6 Material Flow Diagram

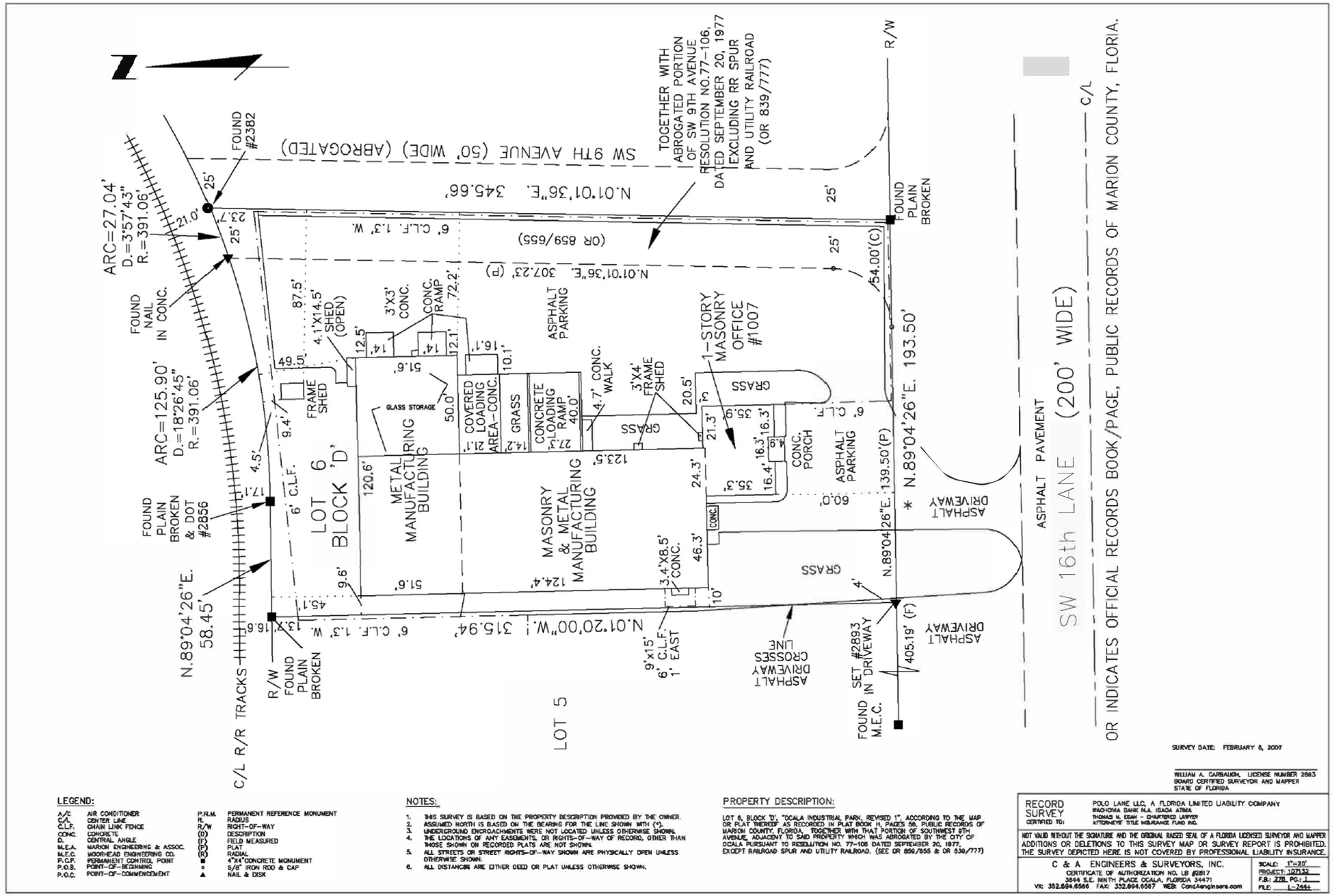

SURVEY DATE: FEBRUARY 8, 2007

WILLIAM A. CARBAUGH, LICENSE NUMBER 2683
BOARD CERTIFIED SURVEYOR AND MAPPER
STATE OF FLORIDA

LEGEND:

A/C	AIR CONDITIONER	P.R.M.	PERMANENT REFERENCE MONUMENT
C/L	CENTER LINE	R.	RADIUS
C.L.F.	CHAIN LINK FENCE	R/W	RIGHT-OF-WAY
CONC.	CONCRETE	(D)	DESCRIPTION
D.	CENTRAL ANGLE	(F)	FIELD MEASURED
M.E.A.	MARION ENGINEERING & ASSOC.	(P)	PLAT
M.E.C.	MOORHEAD ENGINEERING CO.	(R)	RADIAL
P.C.P.	PERMANENT CONTROL POINT	■	4"x4" CONCRETE MONUMENT
P.O.B.	POINT-OF-BEGINNING	○	5/8" IRON ROD & CAP
P.O.C.	POINT-OF-COMMENCEMENT	▲	NAIL & DISK

NOTES:

1. THIS SURVEY IS BASED ON THE PROPERTY DESCRIPTION PROVIDED BY THE OWNER.
2. ASSUMED NORTH IS BASED ON THE BEARING FOR THE LINE SHOWN WITH (*).
3. UNDERGROUND ENCROACHMENTS WERE NOT LOCATED UNLESS OTHERWISE SHOWN.
4. THE LOCATIONS OF ANY EASEMENTS, OR RIGHTS-OF-WAY OF RECORD, OTHER THAN THOSE SHOWN ON RECORDED PLATS ARE NOT SHOWN.
5. ALL STREETS OR STREET RIGHTS-OF-WAY SHOWN ARE PHYSICALLY OPEN UNLESS OTHERWISE SHOWN.
6. ALL DISTANCES ARE EITHER DEED OR PLAT UNLESS OTHERWISE SHOWN.

PROPERTY DESCRIPTION:

LOT 6, BLOCK 'D', "OCALA INDUSTRIAL PARK, REVISED 1", ACCORDING TO THE MAP OR PLAT THEREOF AS RECORDED IN PLAT BOOK H, PAGES 58, PUBLIC RECORDS OF MARION COUNTY, FLORIDA, TOGETHER WITH THAT PORTION OF SOUTHWEST 9TH AVENUE, ADJACENT TO SAID PROPERTY WHICH WAS ABROGATED BY THE CITY OF OCALA PURSUANT TO RESOLUTION NO. 77-106 DATED SEPTEMBER 20, 1977, EXCEPT RAILROAD SPUR AND UTILITY RAILROAD. (SEE OR 850/655 & OR 839/777)

RECORD SURVEY
CERTIFIED TO: POLO LANE LLC, A FLORIDA LIMITED LIABILITY COMPANY
WACHOVIA BANK N.A. (SADA ATMA
THOMAS M. COAN - CHARTERED LAWYER
ATTORNEYS' TITLE INSURANCE FUND INC.

NOT VALID WITHOUT THE SIGNATURE AND THE ORIGINAL RAISED SEAL OF A FLORIDA LICENSED SURVEYOR AND MAPPER
ADDITIONS OR DELETIONS TO THIS SURVEY MAP OR SURVEY REPORT IS PROHIBITED.
THE SURVEY DEPICTED HERE IS NOT COVERED BY PROFESSIONAL LIABILITY INSURANCE.

C & A ENGINEERS & SURVEYORS, INC.
CERTIFICATE OF AUTHORIZATION NO. LB #2817
3644 S.E. NINTH PLACE OCALA, FLORIDA 34471
VX: 352.694.6586 FAX: 352.694.6587 WEB: CandAengineers.com

SCALE: 1"=20'
PROJECT: 107152
F.B.: 278, PG.: 1
FILE: L-7444

REV. NO.	DATE	DESCRIPTION
1	4/2/2012	ADDED LIGHTING RESOURCES' LOGO.
2	11/14/2013	PERMIT MODIFICATION NOVEMBER 2013

LIGHTING RESOURCES, LLC
OCALA, FLORIDA

Lighting Resources LLC

LIGHTING RESOURCES, LLC - OCALA, FLORIDA
MERCURY RECOVERY FACILITY

SITE PLAT OF SURVEY

PROJ. NO.:	143925
DESIGNED BY:	PCT
DRAWN BY:	PEL
CHECKED BY:	PCT
APPROVED BY:	EKK

DATE: NOVEMBER 2013
DRAWING NO. **D1**
1 OF 7 SHEETS

T:\AutoCAD\Projects\LIGHTING RESOURCES\DRAWINGS\FINAL DRAWING SET\D1 PLAT OF SURVEY.dwg, 11/14/2013 1:50:09 PM

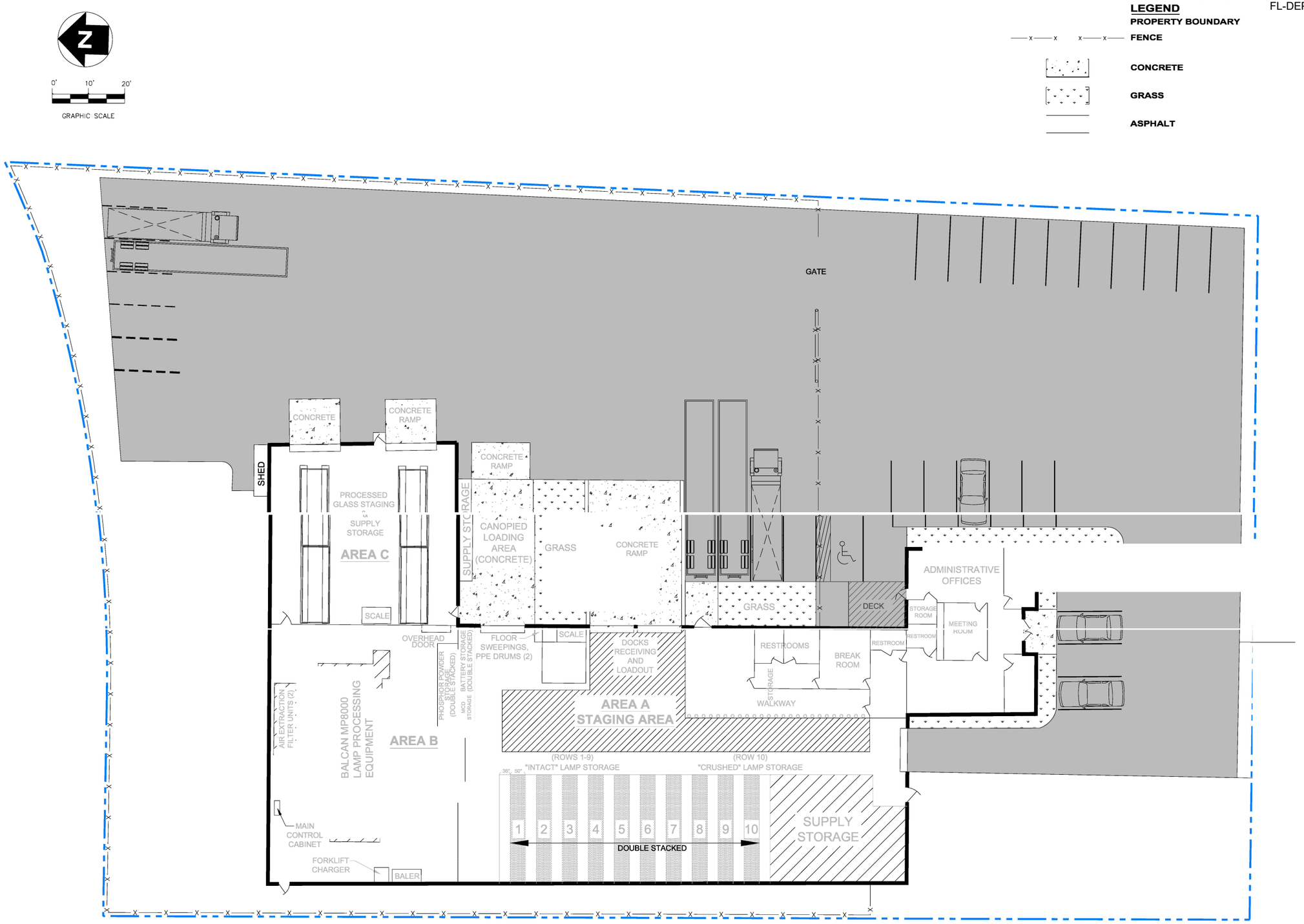

REV NO	DATE	DESCRIPTION
	4/2/2012	ADDED PARKED TRUCKS TRAILERS, AND LIGHTING RESOURCES' LOGO.
	11 14 2013	PERMIT MODIFICATION NOVEMBER 2013

LIGHTING RESOURCES, LLC
OCALA, FLORIDA

LIGHTING RESOURCES, LLC - OCALA, FLORIDA
MERCURY RECOVERY FACILITY

SITE PLAN

PROJ. NO.:	143925	DATE:	NOVEMBER 2013
DESIGNED BY:	PCT	DRAWING NO.	
DRAWN BY:	PEL		**D2**
CHECKED BY:	PCT		
APPROVED BY:	EKK		2 OF 7 SHEETS

T:\AutoCAD\Projects\LIGHTING RESOURCES\DRAWINGS\FINAL DRAWING SET\D2 SITE PLAN.dwg, 11/14/2013 5:13:53 PM

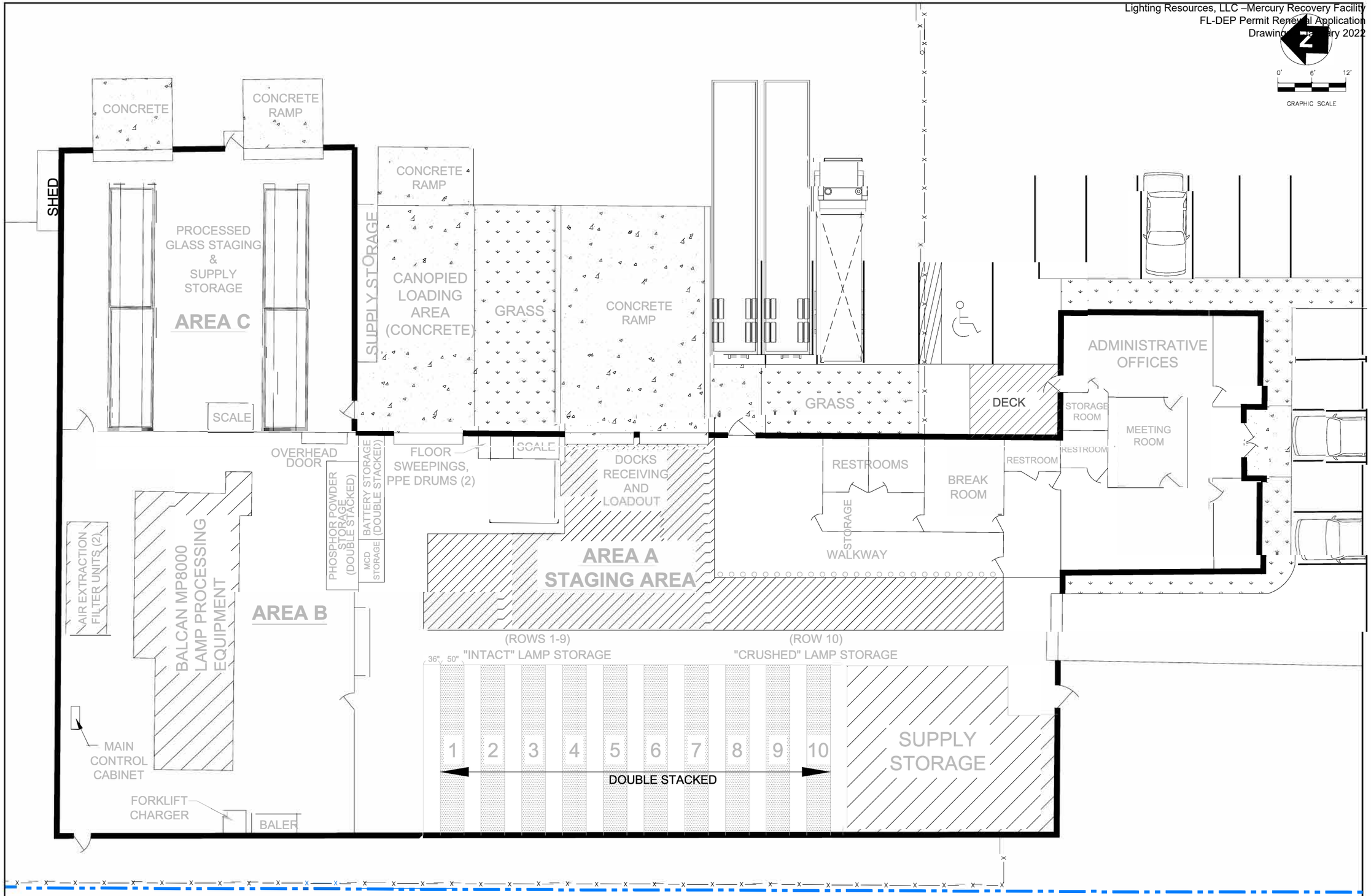

REV. NO.	DATE	DESCRIPTION
1	4/2 2012	ADDED PARKED TRUCKS/ TRAILERS, AND LIGHTING RESOURCES' LOGO.
2	11/14 2013	PERMIT MODIFICATION NOVEMBER 2013

LIGHTING RESOURCES, LLC
OCALA, FLORIDA

Lighting Resources LLC

LIGHTING RESOURCES, LLC - OCALA, FLORIDA
MERCURY RECOVERY FACILITY

BUILDING LAYOUT

PROJ. NO.:	143925
DESIGNED BY:	PCT
DRAWN BY:	PEL
CHECKED BY:	PCT
APPROVED BY:	EKK

DATE: NOVEMBER 2013
DRAWING NO. **D3**
3 OF 7 SHEETS

T:\AutoCAD\Projects\LIGHTING RESOURCES\DRAWINGS\FINAL DRAWING SET\D3A BUILDING LAYOUT.dwg 11/14/2013 5:21:32 PM

T:\AutoCAD\Projects\LIGHTING RESOURCES\DRAWINGS\FINAL DRAWING SET\D4 LAMP PROCESS EQUIPMENT PLAN.dwg, 1/14/2013 1:53:41 PM

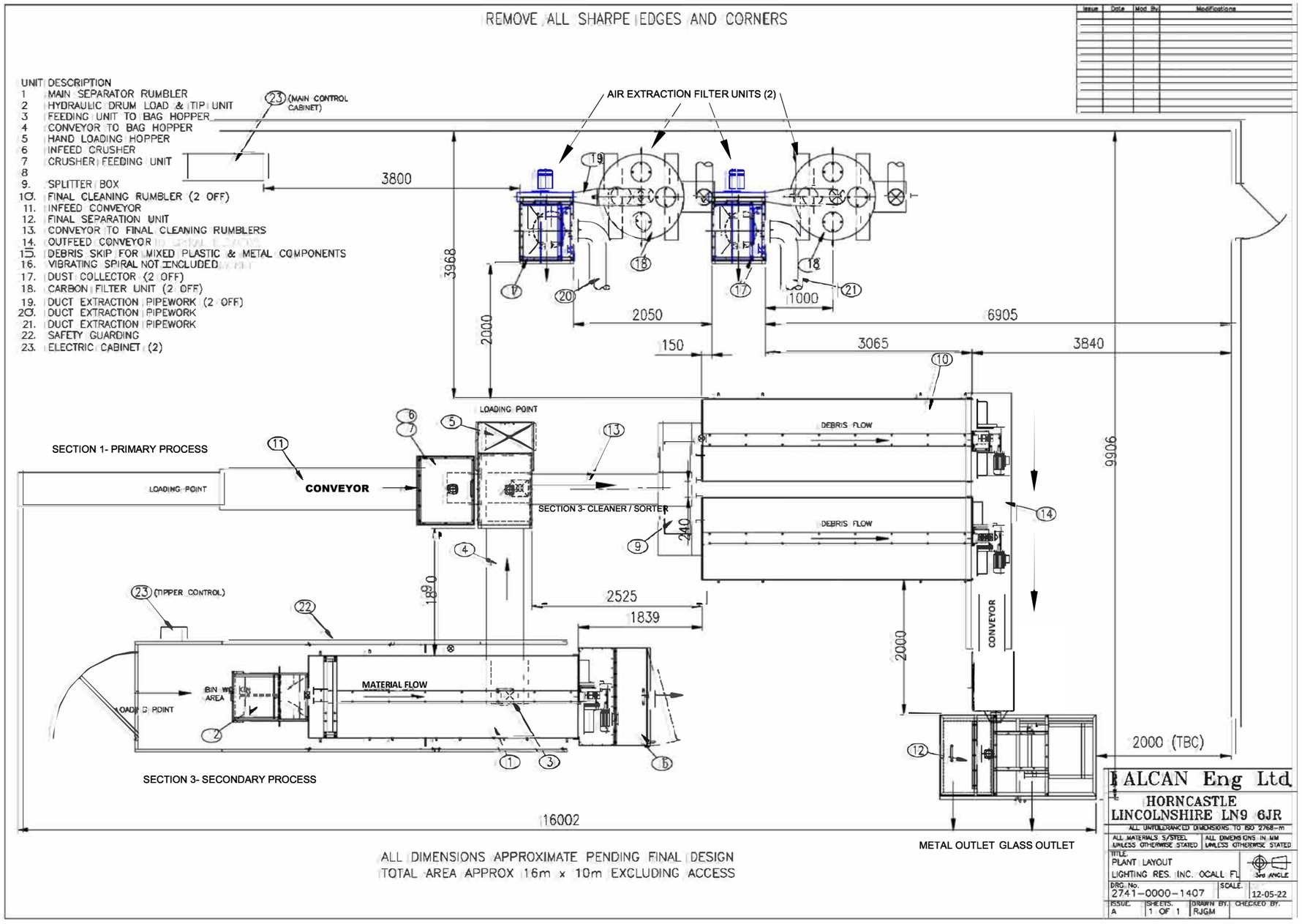

REV.	DATE	DESCRIPTION
1	4 2 2012	CORRECTED ORIENTATION OF THE NORTH ARROW AND ADDED LIGHTING RESOURCES' LOGO.
2	11 14 2013	PERMIT MODIFICATION NOVEMBER 2013

LIGHTING RESOURCES, LLC
OCALA, FLORIDA

LIGHTING RESOURCES, LLC - OCALA, FLORIDA
MERCURY RECOVERY FACILITY

LAMP PROCESS EQUIPMENT PLAN VIEW

PROJ. NO.:	143925	DATE:	NOVEMBER 2022
DESIGNED BY:	PCT	DRAWING NO.	
DRAWN BY:	PEL		**D4**
CHECKED BY:	PCT		
APPROVED BY:	EKK		4 OF 7 SHEETS

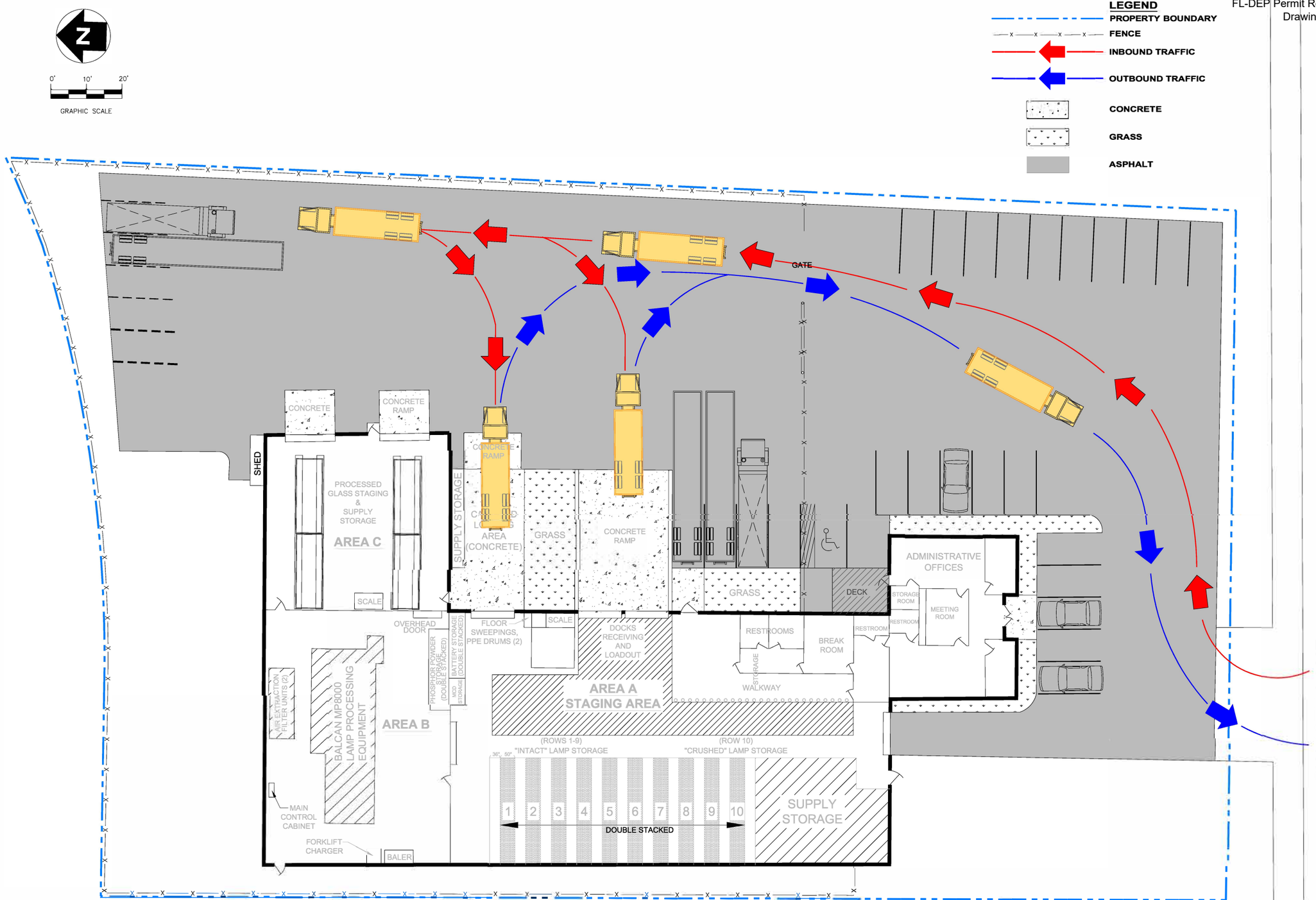

REV. NO.	DATE	DESCRIPTION
1	4/2/2012	ADDED PARKED TRUCKS / TRAILERS, AND LIGHTING RESOURCES' LOGO.
2	11/14/2013	PERMIT MODIFICATION NOVEMBER 2013

LIGHTING RESOURCES, LLC
OCALA, FLORIDA

Lighting Resources LLC

LIGHTING RESOURCES, LLC - OCALA, FLORIDA
MERCURY RECOVERY FACILITY

SITE TRAFFIC

PROJ. NO.:	143925
DESIGNED BY:	PCT
DRAWN BY:	PEL
CHECKED BY:	PCT
APPROVED BY:	EKK
DATE:	NOVEMBER 2013
DRAWING NO.	D5
	5 OF 7 SHEETS

T:\AutoCAD\Projects\LIGHTING RESOURCES\DRAWINGS\FINAL DRAWING SET\D5A SITE TRAFFIC.dwg, 11/14/2013 5:29:54 PM

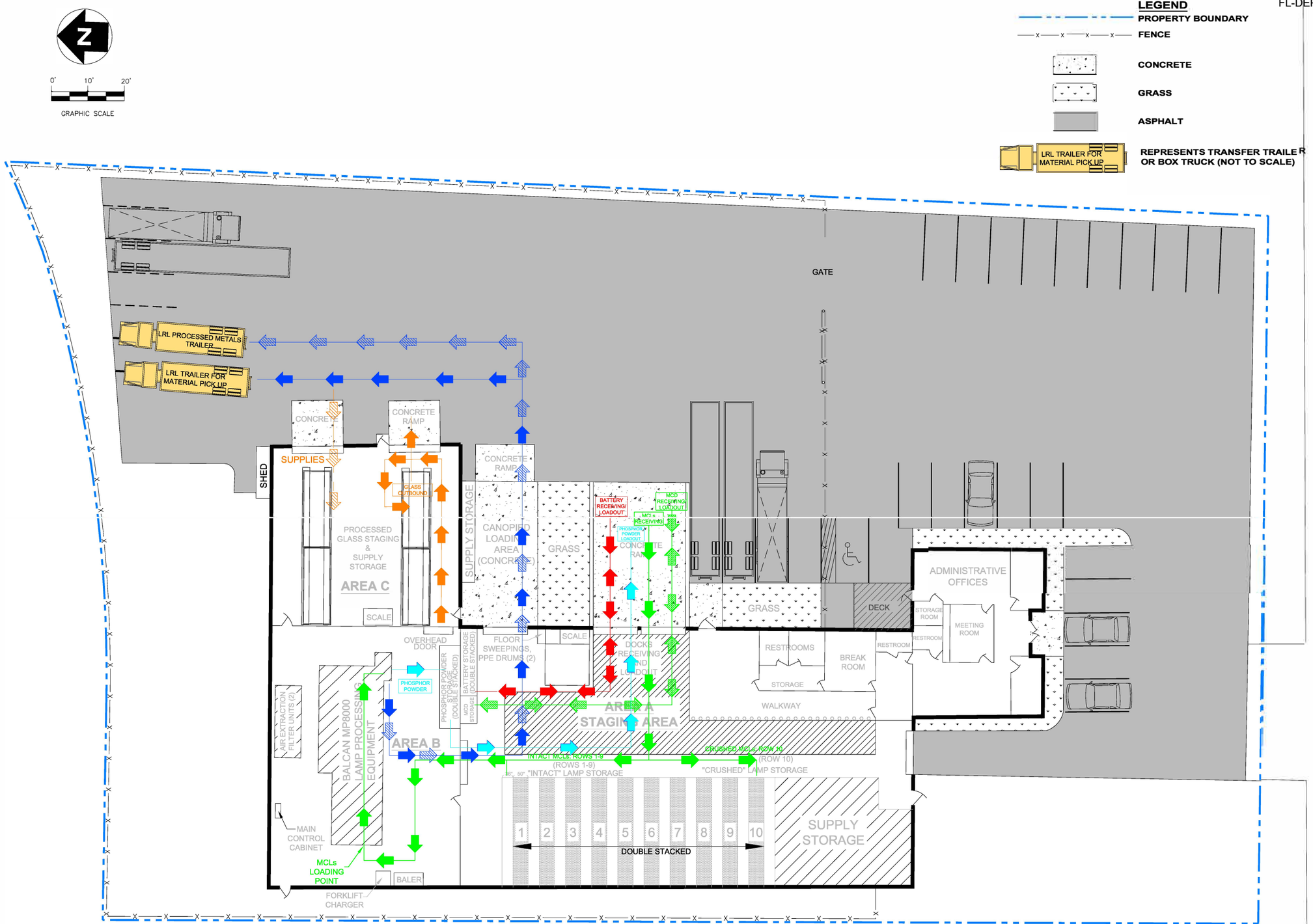

REV. NO.	DATE	DESCRIPTION
1	4/2/2012	ADDED PARKED TRUCKS / TRAILERS, AND LIGHTING RESOURCES' LOGO.
2	11/14/2013	PERMIT MODIFICATION NOVEMBER 2013

LIGHTING RESOURCES, LLC
OCALA, FLORIDA

Lighting Resources LLC

LIGHTING RESOURCES, LLC - OCALA, FLORIDA
MERCURY RECOVERY FACILITY

MATERIAL FLOW DIAGRAM

PROJ. NO.:	143925
DESIGNED BY:	PCT
DRAWN BY:	PEL
CHECKED BY:	PCT
APPROVED BY:	EKK

DATE: NOVEMBER 2013
DRAWING NO. **D6**
6 OF 7 SHEETS

T:\AutoCAD\Projects\LIGHTING RESOURCES\DRAWINGS\FINAL DRAWING SET\D6A MATERIAL FLOW.dwg, 12/3/2013 11:04:28 AM

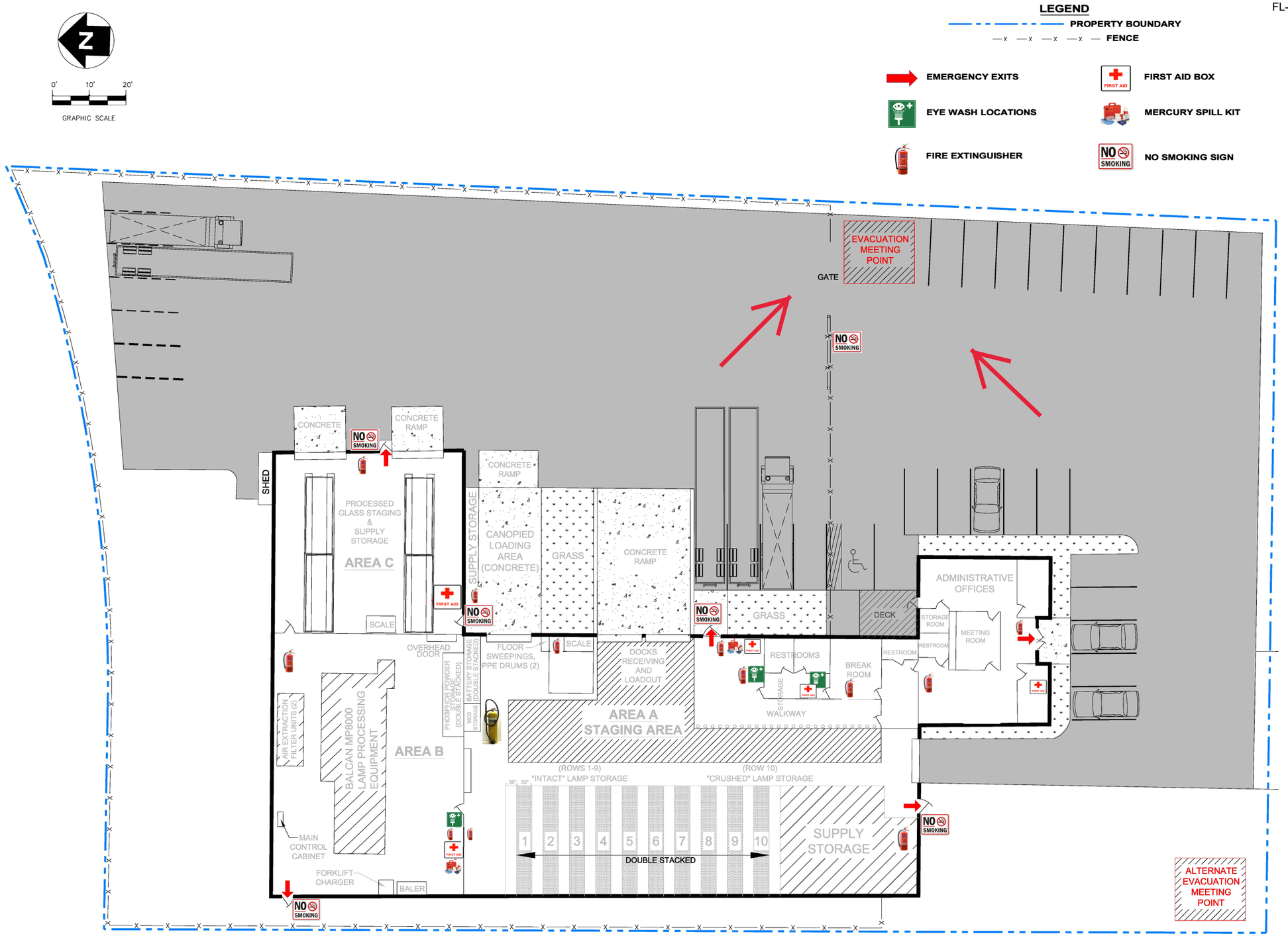

T:\AutoCAD\Projects\LIGHTING RESOURCES\DRAWINGS\FINAL DRAWING SET\D7A EMERGENCY AND E UATION PLAN.dwg, 11/15/2013 9:47:58 AM

REV. NO.	DATE	DESCRIPTION
	4/27/2012	ADDED PARKED TRUCKS / TRAILERS, AND LIGHTING RESOURCES' LOGO.
	11/14/2013	PERMIT MODIFICATION NOVEMBER 2013

LIGHTING RESOURCES, LLC
OCALA, FLORIDA

LIGHTING RESOURCES, LLC - OCALA, FLORIDA
MERCURY RECOVERY FACILITY

FACILITY EMERGENCY AND EVACUATION PLAN

PROJ. NO.:	143925	DATE:	NOVEMBER 2013
DESIGNED BY:	PCT	DRAWING NO.	
DRAWN BY:	PEL		**D7**
CHECKED BY:	PCT		
APPROVED BY:	EKK		7 OF 7 SHEETS

Appendix A

Other Facility Permits

A1 Air General Permit Registration

A2 Hazardous Waste Transporter Certificate of Approval

A3 Registration for Transporter of Universal Waste Lamps and Devices and Large Quantity Handler Facility for Universal Waste Lamps and Devices

A4 No Exposure Certification for Exclusion from NPDES Stormwater Permitting

FLORIDA DEPARTMENT OF
Environmental Protection

Bob Martinez Center
2600 Blair Stone Road
Tallahassee, Florida 32399-2400

Ron DeSantis
Governor

Jeanette Nuñez
Lt. Governor

Shawn Hamilton
Secretary

Electronic Submission

Air General Permit Re-Registration

You have successfully submitted an Air General Permit Registration to operate a **Volume Reduction, Mercury Recovery, Mercury Reclamation** Facility under the authority of **Rule 62-210.310, F.A.C.**. Your registration was received on **September 16, 2021**. Unless you are notified by the Department of ineligibility to use the air general permit, you may use the air general permit thirty (30) days after giving notice to the Department.

Below is a copy of the details of your registration for your records.

Facility Information

Facility ID:	0830171
Facility or Business Name:	LIGHTING RESOURCES LLC
Site Name:	LIGHTING RESOURCES
Address Line 1:	1007 SW 16th Ln
Address Line 2:	
City/State/Zip Code:	Ocala, FL 34471 1228

Mailing Address

Address Line 1:	1007 SW 16th Ln
Address Line 2:	
City/State/Zip Code:	Ocala, FL 34471 1228

Owner

Name:	LIGHTING RESOURCES, LLC
Address Line 1:	1007 SW 16th Ln
Address Line 2:	
City/State/Zip Code:	Ocala, FL 34471 1228

Facility Contact(s)

Name:	BUFF FRITZ
Address Line 1:	1007 SW 16th Ln
Address Line 2:	
City/State/Zip Code:	Ocala, FL 34471 1228
Phone Number:	(352) 509-3001
Extension:	
Cell Number:	(352) 299-1307
Fax Number:	
E-mail Address:	buff.fritz@lightingresourcesinc.com

Correspondence Contact(s)

Name:	Susan Richard
Address Line 1:	805 E Francis St
Address Line 2:	
City/State/Zip Code:	Ontario, CA 91761 5516
Phone Number:	(909) 923-7252
Extension:	230
Cell Number:	(949) 300-7559
Fax Number:	(909) 923-7510
E-mail Address:	susan.richard@lightingresourcesinc.com

Notification Submitted By

Name:	Susan Richard
Phone Number:	(909) 923-7252
E-mail Address:	susan.richard@lightingresourcesinc.com

All information submitted was certified true, accurate, and correct to the best of the knowledge of the person whose name appears above.

If you have any questions or concerns about the information contained in this report, please contact the Small Business Environmental Assistance Program at (800) 722-7457 or by e-mail at Small.Business@floridadep.gov.

Facility Information[1]

Facility Processes:

X	Volume Reduction
X	Mercury Recovery
X	Mercury Reclamation

Air Handler Type:

X	Dual Air Handling Systems
	Single Air Handling System

Dual Air Handling System Description:

File Description
Balan Air Filters

[1]Items appearing in RED indicate a value or response that may cause your Air General Permit to be out of compliance.

FLORIDA DEPARTMENT OF Environmental Protection

Bob Martinez Center
2600 Blair Stone Road
Tallahassee, FL 32399-2400

Ron DeSantis
Governor

Jeanette Nuñez
Lt. Governor

Noah Valenstein
Secretary

****

HAZARDOUS WASTE TRANSPORTER
CERTIFICATE OF APPROVAL

****

This is to certify that the carrier specified below has been approved as a hazardous waste transporter in Florida. The terms and conditions of this certificate require that the holder comply with all applicable portions of Chapter 62-730, Florida Administrative Code. This certificate shall be rendered null and void if any information contained within becomes obsolete. The certificate shall remain valid through the expiration date specified below.

TRANSPORTER: Lighting Resources LLC

FACILITY ID NO: FLR000070565

FACILITY ADDRESS: 1007 SW 16th Ln
Ocala, FL 34471

EXPIRATION DATE: November 30, 2022

APPROVED TRANSFER FACILITY: NO Susan L Horlick

APPROVAL ISSUED BY: _____ DATE: August 12, 2021
Susan Horlick
Environmental Specialist III
Hazardous Waste Regulation Section
850/245-8778

FLORIDA DEPARTMENT OF Environmental Protection

Bob Martinez Center
2600 Blair Stone Road
Tallahassee, FL 32399-2400

Ron DeSantis
Governor

Jeanette Nuñez
Lt. Governor

Noah Valenstein
Secretary

03/01/2021

Buff Fritz
Lighting Resources LLC
1007 SW 16th Lane
Ocala, FL 34471-

The Florida Department of Environmental Protection has reviewed your application for registration as a transporter or handler for universal waste lamps and devices destined for recycling. Based on the information received, the facility located at **1007 SW 16th Ln, Ocala, FL 34471** has been registered through **March 1, 2022** with the following status:

Facility ID # **FLR000070565**
Transporter of Universal Waste Lamps and Devices
Large Quantity Handler Facility for Universal Waste Lamps and Devices

Requirements for packaging, training and recordkeeping for transporters and handlers of universal waste lamps or devices destined for recycling are contained in Chapter 62-737, Florida Administrative Code (F.A.C.). These requirements are simple, flexible, and make good business and environmental sense. The requirements and fact sheets summarizing them can be found on the following website: http://www.dep.state.fl.us/waste/categories/mercury/pages/registration.htm

This registration does not allow you to transport or handle universal waste lamps or devices which are destined for landfill or any other disposal. The transportation or handling of universal waste lamps or devices destined for disposal is subject to our hazardous waste management regulations under Chapter 62-730, Florida Administrative Code (F.A.C.).

The renewal notice for this registration will be sent to the contact person on your application. If any of your facilitys information changes, please notify the Department using the Florida Notification of Regulated Waste Activity, DEP Form 62-730.900(1)(b), F.A.C.

If you have any questions, you may contact me at (850)245-8705 or Glen.Perrigan@dep.state.fl.us.

Sincerely,

Susan L Harlick
for

Glen Perrigan
Environmental Manager
Hazardous Waste Regulation Section

Enclosure: Florida Notification of Regulated Waste Activity

FLORIDA DEPARTMENT OF Environmental Protection

Bob Martinez Center
2600 Blair Stone Road
Tallahassee, FL 32399-2400

Ron DeSantis
Governor

Jeanette Nuñez
Lt. Governor

Shawn Hamilton
Secretary

December 27, 2021

Susan Richard
Lighting Resources, LLC
1007 SW 16th Ln
Ocala, FL 34471

RE: **Facility ID: FLRNEF399-002**
Lighting Resources, LLC
County: Marion

Dear Applicant:

The Florida Department of Environmental Protection has received and processed your *No Exposure Certification for Exclusion from NPDES Stormwater Permitting* (No Exposure Certification) and the accompanying processing fee. This letter acknowledges that:

- your No Exposure Certification is complete;
- your processing fee is paid-in-full;
- you are excluded from having to obtain a National Pollutant Discharge Elimination System (NPDES) stormwater discharge permit for the next five years; and
- your exclusion is subject to the conditions and limitations in Rule 62-620.100(2)(o) of the Florida Administrative Code.

The No Exposure Certification is your certified affirmation that stormwater discharged by your facility does not come into contact with industrial materials or activities.

Your facility identification number is **FLRNEF399-002**. Please include this number on all future correspondence to the Department regarding this permit.

The No Exposure Certification is valid for five years with coverage commencing **12/23/2021** and terminating **12/22/2026**. To renew your certification for another five-year period, you must submit a new No Exposure Certification form and processing fee to the Department. To assure continuous coverage, it is recommended that the new certification and fee be submitted at least 30 days prior to the expiration date.

Facility ID: FLRNEF399-002
Page 2
December 27, 2021

If stormwater becomes exposed to your industrial materials or activities at any time, your exclusion will no longer be effective and you will be subject to enforcement for discharging stormwater without a permit. If you anticipate the condition of no exposure will change, you should immediately (1) terminate your exclusion by filing a *National Pollutant Discharge Elimination System (NPDES) Stormwater Notice of Termination*, DEP Document No. 62-621.300(6) and (2) obtain permit coverage to discharge stormwater associated with industrial activity.

If your facility discharges stormwater through a municipal separate storm sewer system (MS4), be sure to submit a copy of your certification to the MS4 operator as required by Rule 62-620.100(2)(o)1 of the Florida Administrative Code. For the duration of your exclusion, your facility is subject to inspection by the Department, its authorized agents, and the operator of the MS4 into which you discharge (if applicable).

If you have any questions concerning this acknowledgment letter, please contact the NPDES Stormwater Notices Center at (866) 336-6312.

Sincerely,

Krishna Baral
NPDES Stormwater Program
Florida Department of Environmental Protection

Appendix B

Facility Photos

Photographic Record

Client:	Lighting Resources, LLC		**Site Name / Location:**	Lighting Resources, LLC / Ocala, FL	
Project No.:	143925	**Photos Taken by:**	E. Kramer	**Date of Photos:**	9/13/2011

Photo No. 1	Front of Site looking north at south wall of Area A (Lamp Staging and Supply Storage) and Administrative Offices to the right of Area A.

Photo No. 2	Front of Site looking northeast at Administrative Offices and guest parking area.

Photographic Record

Client:	Lighting Resources, LLC	**Site Name / Location:**	Lighting Resources, LLC / Ocala, FL		
Project No.:	143925	**Photos Taken by:**	E. Kramer	**Date of Photos:**	9/13/2011

Photo No. 3	Front of Site looking north along western edge of Site property with adjacent property (located to the west of Site) shown on the left.

Photo No. 4	Southeast area of Site looking northwest at employee parking area, eastern edge of Administrative Offices and Facility Building, and receiving / loading docks in background (on the the right).

Photographic Record

Client:	Lighting Resources, LLC		**Site Name / Location:**	Lighting Resources, LLC / Ocala, FL	
Project No.:	143925	**Photos Taken by:**	E. Kramer	**Date of Photos:**	9/13/2011

Photo No. 5	Southeast area of Site looking north to northwest at employee parking area, eastern edge of Facility Building, receiving / loading docks, site fencing, canopied area with empty drum storage, and 3-parked trailers for loadout of processed glass and metals.

Photo No. 6	Southeast area of Site looking northwest at eastern edge of Facility Building, receiving / loading docks, site fencing, and canopied area.

Photographic Record

Client:	Lighting Resources, LLC		**Site Name / Location:**	Lighting Resources, LLC / Ocala, FL	
Project No.:	143925	**Photos Taken by:**	E. Kramer	**Date of Photos:**	9/13/2011

Photo No. 7	Close-up photo of receiving / loading dock bay (east side of Facility Building).

Photo No. 8	Close-up photo of canopied area along east side of Facility Building showing empty drum storage on the right.

Photographic Record

Client:	Lighting Resources, LLC		**Site Name / Location:**	Lighting Resources, LLC / Ocala, FL	
Project No.:	143925	**Photos Taken by:**	E. Kramer	**Date of Photos:**	9/13/2011

Photo No. 9	Northeast corner of Facility Building looking west at Area C overhead doors on east side of building.

Photo No. 10	Looking west along north side of Facility Building (north wall of Area C; around the corner from area shown in Photo No. 9, above).

Photographic Record

Client:	Lighting Resources, LLC		**Site Name / Location:**	Lighting Resources, LLC / Ocala, FL	
Project No.:	143925	**Photos Taken by:**	E. Kramer	**Date of Photos:**	9/13/2011

Photo No. 11	Parked trailers for processed glass and metals located in northeast corner of Site.

Photo No. 12	Northwest corner of Site looking south along west side of Facility Building and Site property (fencing on the right).

Photographic Record

Client:	Lighting Resources, LLC		**Site Name / Location:**	Lighting Resources, LLC / Ocala, FL	
Project No.:	143925	**Photos Taken by:**	E. Kramer	**Date of Photos:**	9/13/2011

Photo No. 13	Northeast corner of Area A showing battery sorting and staging area along Area A north wall on left, and overhead door to outdoor canopied area on right.

Photo No. 14	Southwest corner of Area A showing supply storage and south overhead door.

Photographic Record

Client:	Lighting Resources, LLC		**Site Name / Location:**	Lighting Resources, LLC / Ocala, FL	
Project No.:	143925	**Photos Taken by:**	E. Kramer	**Date of Photos:**	9/13/2011

Photo No. 15	Close-up of supply storage in Area A southwest corner.

Photo No. 16	Looking at west wall of Area A in northwest corner. Common wall between Areas A and B shown on far right.

Photographic Record

Client:	Lighting Resources, LLC		**Site Name / Location:**	Lighting Resources, LLC / Ocala, FL	
Project No.:	143925	**Photos Taken by:**	E. Kramer	**Date of Photos:**	9/13/2011

Photo No. 17	Looking north at north wall of Area A (also common wall between Areas A and B.

Photo No. 18	Looking northwest at northwest corner of Area B (Lamp Processing Room) showing sealed floor. Lamp processing equipment was not installed at time of photo.

Photographic Record

Client:	Lighting Resources, LLC		**Site Name / Location:**	Lighting Resources, LLC / Ocala, FL	
Project No.:	143925	**Photos Taken by:**	E. Kramer	**Date of Photos:**	9/13/2011

Photo No. 19	Looking northeast at northeast corner of Area B (Lamp Processing Room) showing sealed floor, north wall and east / common wall and access door between Areas B and C.

Photographic Record

Client:	Lighting Resources, LLC		**Site Name / Location:**	Lighting Resources, LLC / Ocala, FL	
Project No.:	143925	**Photos Taken by:**	H. Clark	**Date of Photos:**	12/1/2011

Photo No. 20	Looking at the west wall, northwest corner, and portion of north wall of Area A. Photo shows supplies in foreground and material rows and aisles in background.

Photo No. 21	Looking at the west wall, southwest corner, and portion of south wall of Area A. Photo shows supplies in background and material rows and aisles in foreground.

Photographic Record

Client:	Lighting Resources, LLC		**Site Name / Location:**	Lighting Resources, LLC / Ocala, FL	
Project No.:	143925	**Photos Taken by:**	H. Clark	**Date of Photos:**	12/1/2011

Photo No. 22	Looking in a southeasterly direction in the Area B – Lamp Processing Room, Photo shows the Balcan MP8000 equipment primary processing unit in foreground, secondary processing unit immediately behind, cleaning/sorting unit on far left in photo, and overhead ductwork that pulls vapors and powder to air filtration units (not shown, would be on left hand side)..

Photo No. 23	Looking in a northeasterly direction in the Area B – Lamp Processing Room. Photo shows the Balcan MP8000 equipment secondary processing unit, hydraulic drum lift on left and rumbler on right.

Photographic Record

Client:	Lighting Resources, LLC		**Site Name / Location:**	Lighting Resources, LLC / Ocala, FL	
Project No.:	143925	**Photos Taken by:**	H. Clark	**Date of Photos:**	12/1/2011

Photo No. 24	Looking in a southerly direction in the Area C – Processed Glass and Supply Storage Room.

Photo No. 25	Looking in an easterly direction at the Area A overhead doors and material receiving/loadout docks.

Appendix C

Equipment

C1 Crackbond JF 311 Joint Filler

C2 Tile Clad Coatings

C3 MP8000 Balcan Equipment

C4 MJC Mini Air Filters

C5 Analytical Data for Processed Lamp Material

C6 SDS ES 7X Laboratory Detergent

C7 SDS HgX Mercury Decontaminant Powder

C8 Autel Dust Collector Valve

Conforms to HCS 2012 - United States and Canada WHMIS 2015

SAFETY DATA SHEET

CRACKBOND® JF-311 Part A

Section 1. Identification

GHS product identifier : CRACKBOND® JF-311 Part A

Other means of identification :

Product type :

Relevant identified uses of the substance or mixture and uses advised against

Identified uses : Joint Treatment

Supplier's details : Adhesives Technology Corp.
450 East Copans Road,
Pompano Beach, FL 33064
(800) 892-1880
(800) 362-3320
www.atcepoxy.com

Emergency telephone number (with hours of operation) : CHEM TEL: 800-255-3924 24/7

Section 2. Hazards identification

OSHA/HCS status : This material is considered hazardous by the OSHA Hazard Communication Standard (29 CFR 1910.1200).

Classification of the substance or mixture : ACUTE TOXICITY (inhalation) - Category 4
SKIN IRRITATION - Category 2
EYE IRRITATION - Category 2A
RESPIRATORY SENSITIZATION - Category 1
SKIN SENSITIZATION - Category 1
CARCINOGENICITY - Category 2
SPECIFIC TARGET ORGAN TOXICITY (SINGLE EXPOSURE) (Respiratory tract irritation) - Category 3
SPECIFIC TARGET ORGAN TOXICITY (REPEATED EXPOSURE) - Category 2

GHS label elements

Hazard pictograms :

Signal word : Danger

Hazard statements : H332 - Harmful if inhaled.
H319 - Causes serious eye irritation.
H315 - Causes skin irritation.
H334 - May cause allergy or asthma symptoms or breathing difficulties if inhaled.
H317 - May cause an allergic skin reaction.
H351 - Suspected of causing cancer.
H335 - May cause respiratory irritation.
H373 - May cause damage to organs through prolonged or repeated exposure.

Section 2. Hazards identification

Precautionary statements

Prevention : P201 - Obtain special instructions before use.
P202 - Do not handle until all safety precautions have been read and understood.
P280 - Wear protective gloves. Wear eye or face protection. Wear protective clothing.
P284 - Wear respiratory protection.
P271 - Use only outdoors or in a well-ventilated area.
P260 - Do not breathe vapor.
P264 - Wash hands thoroughly after handling.
P272 (OSHA) - Contaminated work clothing must not be allowed out of the workplace.

Response : P314 - Get medical attention if you feel unwell.
P308 + P313 - IF exposed or concerned: Get medical attention.
P304 + P341 (OSHA) + P312 - IF INHALED: If breathing is difficult, remove person to fresh air and keep comfortable for breathing. Call a POISON CENTER or physician if you feel unwell.
P342 + P311 - If experiencing respiratory symptoms: Call a POISON CENTER or physician.
P302 + P352 + P363 - IF ON SKIN: Wash with plenty of soap and water. Wash contaminated clothing before reuse.
P333 + P313 - If skin irritation or rash occurs: Get medical attention.
P305 + P351 + P338 - IF IN EYES: Rinse cautiously with water for several minutes. Remove contact lenses, if present and easy to do. Continue rinsing.
P337 + P313 - If eye irritation persists: Get medical attention.

Storage : P405 - Store locked up.

Disposal : P501 - Dispose of contents and container in accordance with all local, regional, national and international regulations.

Other hazards which do not result in classification/ HHNOC/PHNOC : None known.

Section 3. Composition/information on ingredients

Substance/mixture : Mixture

Other means of identification :

CAS number/other identifiers

CAS number : Not applicable.

Product code :

Ingredient name	%	CAS number
Isocyanic acid, polymethylenepolyphenylene ester, polymer with .alpha.-hydro-.omega.-hydroxypoly[oxy(methyl-1,2-ethanediyl)]	≥25 - ≤50	53862-89-8
4,4'-Methylenediphenyl Diisocyanate	≥25 - ≤50	101-68-8
O-(P-Isocyanatobenzyl)Phenyl Isocyanate	≥5 - ≤10	5873-54-1

Any concentration shown as a range is to protect confidentiality or is due to batch variation.

There are no additional ingredients present which, within the current knowledge of the supplier and in the concentrations applicable, are classified as hazardous to health or the environment and hence require reporting in this section.

Occupational exposure limits, if available, are listed in Section 8.

Section 4. First aid measures

Description of necessary first aid measures

Eye contact : Immediately flush eyes with plenty of water, occasionally lifting the upper and lower eyelids. Check for and remove any contact lenses. Continue to rinse for at least 20 minutes. Get medical attention.

Inhalation : Remove victim to fresh air and keep at rest in a position comfortable for breathing. If it is suspected that fumes are still present, the rescuer should wear an appropriate mask or self-contained breathing apparatus. If not breathing, if breathing is irregular or if respiratory arrest occurs, provide artificial respiration or oxygen by trained personnel. It may be dangerous to the person providing aid to give mouth-to-mouth resuscitation. Get medical attention. If necessary, call a poison center or physician. If unconscious, place in recovery position and get medical attention immediately. Maintain an open airway. Loosen tight clothing such as a collar, tie, belt or waistband. In case of inhalation of decomposition products in a fire, symptoms may be delayed. The exposed person may need to be kept under medical surveillance for 48 hours. In the event of any complaints or symptoms, avoid further exposure.

Skin contact : Wash with plenty of soap and water. Wash contaminated clothing thoroughly with water before removing it, or wear gloves. Continue to rinse for at least 20 minutes. Get medical attention. In the event of any complaints or symptoms, avoid further exposure. Wash clothing before reuse. Clean shoes thoroughly before reuse.

Ingestion : Wash out mouth with water. Remove dentures if any. Remove victim to fresh air and keep at rest in a position comfortable for breathing. If material has been swallowed and the exposed person is conscious, give small quantities of water to drink. Stop if the exposed person feels sick as vomiting may be dangerous. Do not induce vomiting unless directed to do so by medical personnel. If vomiting occurs, the head should be kept low so that vomit does not enter the lungs. Get medical attention. Never give anything by mouth to an unconscious person. If unconscious, place in recovery position and get medical attention immediately. Maintain an open airway. Loosen tight clothing such as a collar, tie, belt or waistband.

Most important symptoms/effects, acute and delayed

Potential acute health effects

Eye contact : Causes serious eye irritation.

Inhalation : Harmful if inhaled. May cause respiratory irritation. May cause allergy or asthma symptoms or breathing difficulties if inhaled.

Skin contact : Causes skin irritation. May cause an allergic skin reaction.

Ingestion : No known significant effects or critical hazards.

Over-exposure signs/symptoms

Eye contact : Adverse symptoms may include the following:
pain or irritation
watering
redness

Inhalation : Adverse symptoms may include the following:
respiratory tract irritation
coughing
wheezing and breathing difficulties
asthma

Skin contact : Adverse symptoms may include the following:
irritation
redness

Ingestion : No known significant effects or critical hazards.

Section 4. First aid measures

Indication of immediate medical attention and special treatment needed, if necessary

Notes to physician	:	In case of inhalation of decomposition products in a fire, symptoms may be delayed. The exposed person may need to be kept under medical surveillance for 48 hours.
Specific treatments	:	No specific treatment.
Protection of first-aiders	:	No action shall be taken involving any personal risk or without suitable training. If it is suspected that fumes are still present, the rescuer should wear an appropriate mask or self-contained breathing apparatus. It may be dangerous to the person providing aid to give mouth-to-mouth resuscitation. Wash contaminated clothing thoroughly with water before removing it, or wear gloves.

See toxicological information (Section 11)

Section 5. Fire-fighting measures

Extinguishing media

Suitable extinguishing media	:	Use an extinguishing agent suitable for the surrounding fire.
Unsuitable extinguishing media	:	None known.
Specific hazards arising from the chemical	:	No specific fire or explosion hazard.
Hazardous thermal decomposition products	:	Decomposition products may include the following materials: carbon dioxide carbon monoxide nitrogen oxides
Special protective actions for fire-fighters	:	No special measures are required.
Special protective equipment for fire-fighters	:	Fire-fighters should wear appropriate protective equipment and self-contained breathing apparatus (SCBA) with a full face-piece operated in positive pressure mode.

Section 6. Accidental release measures

Personal precautions, protective equipment and emergency procedures

For non-emergency personnel	:	No action shall be taken involving any personal risk or without suitable training. Keep unnecessary and unprotected personnel from entering. Do not touch or walk through spilled material. Avoid breathing vapor or mist. Provide adequate ventilation. Wear appropriate respirator when ventilation is inadequate. Put on appropriate personal protective equipment.
For emergency responders	:	If specialized clothing is required to deal with the spillage, take note of any information in Section 8 on suitable and unsuitable materials. See also the information in "For non-emergency personnel".
Environmental precautions	:	Avoid dispersal of spilled material and runoff and contact with soil, waterways, drains and sewers. Inform the relevant authorities if the product has caused environmental pollution (sewers, waterways, soil or air).

Section 6. Accidental release measures

Methods and materials for containment and cleaning up

Spill : Stop leak if without risk. Move containers from spill area. Approach release from upwind. Prevent entry into sewers, water courses, basements or confined areas. Wash spillages into an effluent treatment plant or proceed as follows. Contain and collect spillage with non-combustible, absorbent material e.g. sand, earth, vermiculite or diatomaceous earth and place in container for disposal according to local regulations (see Section 13). Dispose of via a licensed waste disposal contractor. Contaminated absorbent material may pose the same hazard as the spilled product. Note: see Section 1 for emergency contact information and Section 13 for waste disposal.

Section 7. Handling and storage

Precautions for safe handling

Protective measures : Put on appropriate personal protective equipment (see Section 8). Persons with a history of skin sensitization problems or asthma, allergies or chronic or recurrent respiratory disease should not be employed in any process in which this product is used. Avoid exposure - obtain special instructions before use. Do not handle until all safety precautions have been read and understood. Do not get in eyes or on skin or clothing. Do not breathe vapor or mist. Do not ingest. Use only with adequate ventilation. Wear appropriate respirator when ventilation is inadequate. Keep in the original container or an approved alternative made from a compatible material, kept tightly closed when not in use. Empty containers retain product residue and can be hazardous. Do not reuse container.

Advice on general occupational hygiene : Eating, drinking and smoking should be prohibited in areas where this material is handled, stored and processed. Workers should wash hands and face before eating, drinking and smoking. See also Section 8 for additional information on hygiene measures. Remove contaminated clothing and protective equipment before entering eating areas.

Conditions for safe storage, including any incompatibilities : Store in accordance with local regulations. Store in original container protected from direct sunlight in a dry, cool and well-ventilated area, away from incompatible materials (see Section 10) and food and drink. Store locked up. Keep container tightly closed and sealed until ready for use. Containers that have been opened must be carefully resealed and kept upright to prevent leakage. Do not store in unlabeled containers. Use appropriate containment to avoid environmental contamination.

Section 8. Exposure controls/personal protection

Control parameters

United States

Occupational exposure limits

Ingredient name	Exposure limits
Isocyanic acid, polymethylenepolyphenylene ester, polymer with .alpha.-hydro-.omega.-hydroxypoly[oxy(methyl-1,2-ethanediyl)] 4,4'-Methylenediphenyl Diisocyanate	None. **ACGIH TLV (United States, 3/2016).** TWA: 0.005 ppm 8 hours. **NIOSH REL (United States, 10/2013).** TWA: 0.05 mg/m³ 10 hours. TWA: 0.005 ppm 10 hours. CEIL: 0.2 mg/m³ 10 minutes. CEIL: 0.02 ppm 10 minutes. **OSHA PEL (United States, 6/2016).** CEIL: 0.02 ppm CEIL: 0.2 mg/m³
O-(P-Isocyanatobenzyl)Phenyl Isocyanate	None.

Section 8. Exposure controls/personal protection

Canada

Occupational exposure limits

Ingredient name	Exposure limits
4,4'-Methylenediphenyl Diisocyanate	**CA Alberta Provincial (Canada, 4/2009).** 8 hrs OEL: 0.005 ppm 8 hours. 8 hrs OEL: 0.05 mg/m³ 8 hours. **CA British Columbia Provincial (Canada, 5/2015). Absorbed through skin. Skin sensitizer.** TWA: 0.005 ppm 8 hours. C: 0.01 ppm **CA Quebec Provincial (Canada, 1/2014). Skin sensitizer.** TWAEV: 0.005 ppm 8 hours. TWAEV: 0.051 mg/m³ 8 hours. **CA Ontario Provincial (Canada, 7/2015).** TWA: 0.005 ppm 8 hours. **CA Saskatchewan Provincial (Canada, 7/2013).** STEL: 0.015 ppm 15 minutes. TWA: 0.005 ppm 8 hours.
O-(P-Isocyanatobenzyl)Phenyl Isocyanate	**CA British Columbia Provincial (Canada, 5/2015).** TWA: 0.005 ppm 8 hours. C: 0.01 ppm **CA Ontario Provincial (Canada, 7/2015).** C: 0.02 ppm TWA: 0.005 ppm 8 hours.

Appropriate engineering controls : Use only with adequate ventilation. Use process enclosures, local exhaust ventilation or other engineering controls to keep worker exposure to airborne contaminants below any recommended or statutory limits.

Environmental exposure controls : Emissions from ventilation or work process equipment should be checked to ensure they comply with the requirements of environmental protection legislation.

Individual protection measures

Hygiene measures : Wash hands, forearms and face thoroughly after handling chemical products, before eating, smoking and using the lavatory and at the end of the working period. Appropriate techniques should be used to remove potentially contaminated clothing. Contaminated work clothing should not be allowed out of the workplace. Wash contaminated clothing before reusing. Ensure that eyewash stations and safety showers are close to the workstation location.

Eye/face protection : Safety eyewear complying with an approved standard should be used when a risk assessment indicates this is necessary to avoid exposure to liquid splashes, mists, gases or dusts. If contact is possible, the following protection should be worn, unless the assessment indicates a higher degree of protection: chemical splash goggles.

Skin protection

Hand protection : Chemical-resistant, impervious gloves complying with an approved standard should be worn at all times when handling chemical products if a risk assessment indicates this is necessary. Considering the parameters specified by the glove manufacturer, check during use that the gloves are still retaining their protective properties. It should be noted that the time to breakthrough for any glove material may be different for different glove manufacturers. In the case of mixtures, consisting of several substances, the protection time of the gloves cannot be accurately estimated.

Body protection : Personal protective equipment for the body should be selected based on the task being performed and the risks involved and should be approved by a specialist before handling this product.

Other skin protection : Appropriate footwear and any additional skin protection measures should be selected based on the task being performed and the risks involved and should be approved by a specialist before handling this product.

Section 8. Exposure controls/personal protection

Respiratory protection : Based on the hazard and potential for exposure, select a respirator that meets the appropriate standard or certification. Respirators must be used according to a respiratory protection program to ensure proper fitting, training, and other important aspects of use.

Section 9. Physical and chemical properties

Appearance

Physical state : Liquid. [Viscous.]

Color : Straw yellow.

Odor : Slightly sweet.

Odor threshold : Not available.

pH : 6 to 8 [Conc. (% w/w): 100%]

Melting point : Not available.

Boiling point : Not available.

Flash point : Closed cup: >93.3°C (>199.9°F)

Evaporation rate : Not available.

Flammability (solid, gas) : Not available.

Lower and upper explosive (flammable) limits : Not available.

Vapor pressure : Not available.

Vapor density : Not available.

Relative density : 1.09 g/cm³

Solubility : Not available.

Partition coefficient: n-octanol/water : Not available.

Auto-ignition temperature : Not available.

Decomposition temperature : Not available.

Viscosity : Dynamic (room temperature): 800 to 1200 mPa·s (800 to 1200 cP)

Volatile organic compounds : See section 9 of part B for VOC content.

Density : Not available.

Section 10. Stability and reactivity

Reactivity : Reacts with water. High heat will cause polymerization.

Chemical stability : The product is stable.

Possibility of hazardous reactions : High heat will cause polymerization.

Conditions to avoid : Heat. High temperatures.

Incompatible materials : Reactive or incompatible with the following materials: oxidizing materials and moisture, water, alcohols, strong bases.

Hazardous decomposition products : Under normal conditions of storage and use, hazardous decomposition products should not be produced.

Section 11. Toxicological information

Information on toxicological effects

Acute toxicity

Product/ingredient name	Result	Species	Dose	Exposure
4,4'-Methylenediphenyl Diisocyanate	LD50 Oral	Rat	9200 mg/kg	-

Irritation/Corrosion

Product/ingredient name	Result	Species	Score	Exposure	Observation
4,4'-Methylenediphenyl Diisocyanate	Eyes - Moderate irritant	Rabbit	-	100 mg	-

Sensitization

There is no data available.

Mutagenicity

There is no data available.

Carcinogenicity

Classification

Product/ingredient name	OSHA	IARC	NTP	ACGIH	EPA	NIOSH
4,4'-Methylenediphenyl Diisocyanate	-	3	-	-	-	-

Reproductive toxicity

There is no data available.

Teratogenicity

There is no data available.

Specific target organ toxicity (single exposure)

Name	Category	Route of exposure	Target organs
Isocyanic acid, polymethylenepolyphenylene ester, polymer with .alpha.-hydro-.omega.-hydroxypoly[oxy(methyl-1,2-ethanediyl)]	Category 3	Not applicable.	Respiratory tract irritation
4,4'-Methylenediphenyl Diisocyanate	Category 3	Not applicable.	Respiratory tract irritation
O-(P-Isocyanatobenzyl)Phenyl Isocyanate	Category 3	Not applicable.	Respiratory tract irritation

Specific target organ toxicity (repeated exposure)

Name	Category	Route of exposure	Target organs
Isocyanic acid, polymethylenepolyphenylene ester, polymer with .alpha.-hydro-.omega.-hydroxypoly[oxy(methyl-1,2-ethanediyl)]	Category 2	Not determined	Not determined
4,4'-Methylenediphenyl Diisocyanate	Category 2	Not determined	Not determined
O-(P-Isocyanatobenzyl)Phenyl Isocyanate	Category 2	Not determined	Not determined

Aspiration hazard

There is no data available.

Information on the likely routes of exposure : Dermal contact. Eye contact. Inhalation. Ingestion.

Potential acute health effects

Eye contact : Causes serious eye irritation.

Inhalation : Harmful if inhaled. May cause respiratory irritation. May cause allergy or asthma symptoms or breathing difficulties if inhaled.

Skin contact : Causes skin irritation. May cause an allergic skin reaction.

Ingestion : No known significant effects or critical hazards.

Section 11. Toxicological information

Symptoms related to the physical, chemical and toxicological characteristics

Eye contact : Adverse symptoms may include the following:
pain or irritation
watering
redness

Inhalation : Adverse symptoms may include the following:
respiratory tract irritation
coughing
wheezing and breathing difficulties
asthma

Skin contact : Adverse symptoms may include the following:
irritation
redness

Ingestion : No known significant effects or critical hazards.

Delayed and immediate effects and also chronic effects from short and long term exposure

Short term exposure

Potential immediate effects : No known significant effects or critical hazards.

Potential delayed effects : No known significant effects or critical hazards.

Long term exposure

Potential immediate effects : No known significant effects or critical hazards.

Potential delayed effects : No known significant effects or critical hazards.

Potential chronic health effects

General : May cause damage to organs through prolonged or repeated exposure. Once sensitized, a severe allergic reaction may occur when subsequently exposed to very low levels.

Carcinogenicity : Suspected of causing cancer. Risk of cancer depends on duration and level of exposure.

Mutagenicity : No known significant effects or critical hazards.

Teratogenicity : No known significant effects or critical hazards.

Developmental effects : No known significant effects or critical hazards.

Fertility effects : No known significant effects or critical hazards.

Numerical measures of toxicity

Acute toxicity estimates

Route	ATE value
Inhalation (vapors)	20.72 mg/L
Inhalation (dusts and mists)	3.942 mg/L

Section 12. Ecological information

Toxicity

There is no data available.

Persistence and degradability

There is no data available.

Bioaccumulative potential

Product/ingredient name	$LogP_{ow}$	BCF	Potential
4,4'-Methylenediphenyl Diisocyanate O-(P-Isocyanatobenzyl)Phenyl Isocyanate	4.51 4.51	200 200	low low

Mobility in soil

Soil/water partition coefficient (K_{oc}) : Not available.

Other adverse effects : No known significant effects or critical hazards.

Section 13. Disposal considerations

Disposal methods : The generation of waste should be avoided or minimized wherever possible. Disposal of this product, solutions and any by-products should comply with the requirements of environmental protection and waste disposal legislation and any regional local authority requirements. Dispose of surplus and non-recyclable products via a licensed waste disposal contractor. Waste should not be disposed of untreated to the sewer unless fully compliant with the requirements of all authorities with jurisdiction. Waste packaging should be recycled. Incineration or landfill should only be considered when recycling is not feasible. This material and its container must be disposed of in a safe way. Care should be taken when handling empty containers that have not been cleaned or rinsed out. Empty containers or liners may retain some product residues. Avoid dispersal of spilled material and runoff and contact with soil, waterways, drains and sewers.

Section 14. Transport information

	DOT	TDG	IMDG	IATA
UN number	Not regulated.	Not regulated.	Not regulated.	Not regulated.
UN proper shipping name	-	-	-	-
Transport hazard class(es)	-	-	-	-
Packing group	-	-	-	-
Environmental hazards	No.	No.	No.	No.

Section 14. Transport information

Additional information	**Reportable quantity** 16666.7 lbs / 7566.7 kg [1833.9 gal / 6941.9 L] Package sizes shipped in quantities less than the product reportable quantity are not subject to the RQ (reportable quantity) transportation requirements.	-	-	-

AERG : Not applicable.

DOT-RQ Details : 4,4'-Methylenediphenyl Diisocyanate 5000 lbs / 2270 kg

Special precautions for user : **Transport within user's premises:** always transport in closed containers that are upright and secure. Ensure that persons transporting the product know what to do in the event of an accident or spillage.

Section 15. Regulatory information

U.S. Federal regulations : **TSCA 8(a) PAIR**: 4,4'-Methylenediphenyl Diisocyanate; O-(P-Isocyanatobenzyl)Phenyl Isocyanate

TSCA 8(a) CDR Exempt/Partial exemption: Not determined

TSCA 8(c) calls for record of SAR: 4,4'-Methylenediphenyl Diisocyanate; O-(P-Isocyanatobenzyl)Phenyl Isocyanate

United States inventory (TSCA 8b): All components are listed or exempted.

Clean Water Act (CWA) 307: 4,4'-Methylenediphenyl Diisocyanate

Clean Air Act Section 112 (b) Hazardous Air Pollutants (HAPs) : Listed

Clean Air Act Section 602 Class I Substances : Not listed

Clean Air Act Section 602 Class II Substances : Not listed

DEA List I Chemicals (Precursor Chemicals) : Not listed

DEA List II Chemicals (Essential Chemicals) : Not listed

SARA 302/304

Composition/information on ingredients

No products were found.

SARA 304 RQ : Not applicable.

SARA 311/312

Classification : Immediate (acute) health hazard
Delayed (chronic) health hazard

Section 15. Regulatory information

Composition/information on ingredients

Name	Fire hazard	Sudden release of pressure	Reactive	Immediate (acute) health hazard	Delayed (chronic) health hazard
Isocyanic acid, polymethylenepolyphenylene ester, polymer with . alpha.-hydro-.omega.-hydroxypoly[oxy(methyl-1,2-ethanediyl)]	No.	No.	No.	Yes.	Yes.
4,4'-Methylenediphenyl Diisocyanate	No.	No.	No.	Yes.	Yes.
O-(P-Isocyanatobenzyl)Phenyl Isocyanate	No.	No.	No.	Yes.	Yes.

SARA 313

	Product name	CAS number
Form R - Reporting requirements	4,4'-Methylenediphenyl Diisocyanate	101-68-8
Supplier notification	4,4'-Methylenediphenyl Diisocyanate	101-68-8

SARA 313 notifications must not be detached from the SDS and any copying and redistribution of the SDS shall include copying and redistribution of the notice attached to copies of the SDS subsequently redistributed.

State regulations

Massachusetts : The following components are listed: 4,4'-Methylenediphenyl Diisocyanate

New York : The following components are listed: 4,4'-Methylenediphenyl Diisocyanate

New Jersey : The following components are listed: 4,4'-Methylenediphenyl Diisocyanate; O-(P-Isocyanatobenzyl)Phenyl Isocyanate

Pennsylvania : The following components are listed: 4,4'-Methylenediphenyl Diisocyanate; O-(P-Isocyanatobenzyl)Phenyl Isocyanate

California Prop. 65

No products were found.

Canada

Canadian lists

Canadian NPRI : The following components are listed: 4,4'-Methylenediphenyl Diisocyanate

CEPA Toxic substances : None of the components are listed.

Canada inventory : All components are listed or exempted.

Section 16. Other information

Hazardous Material Information System (U.S.A.) :

Health	*	2
Fire hazard		1
Reactivity		0
Personal protection		

Caution: HMIS® ratings are based on a 0-4 rating scale, with 0 representing minimal hazards or risks, and 4 representing significant hazards or risks Although HMIS® ratings are not required on SDSs under 29 CFR 1910.1200, the preparer may choose to provide them. HMIS® ratings are to be used with a fully implemented HMIS® program. HMIS® is a registered mark of the National Paint & Coatings Association (NPCA). HMIS® materials may be purchased exclusively from J. J. Keller (800) 327-6868.

The customer is responsible for determining the PPE code for this material.

Section 16. Other information

Procedure used to derive the classification

Classification	Justification
ACUTE TOXICITY (inhalation) - Category 4	Calculation method
SKIN IRRITATION - Category 2	Calculation method
EYE IRRITATION - Category 2A	Calculation method
RESPIRATORY SENSITIZATION - Category 1	Calculation method
SKIN SENSITIZATION - Category 1	Calculation method
CARCINOGENICITY - Category 2	Calculation method
SPECIFIC TARGET ORGAN TOXICITY (SINGLE EXPOSURE) (Respiratory tract irritation) - Category 3	Calculation method
SPECIFIC TARGET ORGAN TOXICITY (REPEATED EXPOSURE) - Category 2	Calculation method

History

Date of issue mm/dd/yyyy : 12/30/2016

Version : 1

Prepared by : KMK Regulatory Services Inc.

Notice to reader

To the best of our knowledge, the information contained herein is accurate. However, neither the above-named supplier, nor any of its subsidiaries, assumes any liability whatsoever for the accuracy or completeness of the information contained herein.
Final determination of suitability of any material is the sole responsibility of the user. All materials may present unknown hazards and should be used with caution. Although certain hazards are described herein, we cannot guarantee that these are the only hazards that exist.

Conforms to HCS 2012 - United States and Canada WHMIS 2015

SAFETY DATA SHEET

CRACKBOND® JF-311 Part B

Section 1. Identification

GHS product identifier : CRACKBOND® JF-311 Part B

Other means of identification :

Product type :

Relevant identified uses of the substance or mixture and uses advised against

Identified uses : Joint Treatment

Supplier's details : Adhesives Technology Corp.
450 East Copans Road,
Pompano Beach, FL 33064
(800) 892-1880
(800) 362-3320
www.atcepoxy.com

Emergency telephone number (with hours of operation) : CHEM TEL: 800-255-3924 24/7

Section 2. Hazards identification

OSHA/HCS status : This material is considered hazardous by the OSHA Hazard Communication Standard (29 CFR 1910.1200).

Classification of the substance or mixture : SKIN IRRITATION - Category 2
EYE IRRITATION - Category 2B
SKIN SENSITIZATION - Category 1
CARCINOGENICITY - Category 2
AQUATIC HAZARD (ACUTE) - Category 3
AQUATIC HAZARD (LONG-TERM) - Category 3

GHS label elements

Hazard pictograms :

Signal word : Warning

Hazard statements : H315 + H320 - Causes skin and eye irritation.
H317 - May cause an allergic skin reaction.
H351 - Suspected of causing cancer.
H412 - Harmful to aquatic life with long lasting effects.

Section 2. Hazards identification

Precautionary statements

Prevention : P201 - Obtain special instructions before use.
P202 - Do not handle until all safety precautions have been read and understood.
P280 - Wear protective gloves. Wear eye or face protection. Wear protective clothing.
P273 - Avoid release to the environment.
P261 - Avoid breathing vapor.
P264 - Wash hands thoroughly after handling.
P272 (OSHA) - Contaminated work clothing must not be allowed out of the workplace.

Response : P308 + P313 - IF exposed or concerned: Get medical attention.
P302 + P352 + P363 - IF ON SKIN: Wash with plenty of soap and water. Wash contaminated clothing before reuse.
P333 + P313 - If skin irritation or rash occurs: Get medical attention.
P305 + P351 + P338 - IF IN EYES: Rinse cautiously with water for several minutes. Remove contact lenses, if present and easy to do. Continue rinsing.
P337 + P313 - If eye irritation persists: Get medical attention.

Storage : P405 - Store locked up.

Disposal : P501 - Dispose of contents and container in accordance with all local, regional, national and international regulations.

Other hazards which do not result in classification/ HHNOC/PHNOC : None known.

Section 3. Composition/information on ingredients

Substance/mixture : Mixture

Other means of identification :

CAS number/other identifiers

CAS number : Not applicable.

Product code :

Ingredient name	%	CAS number
Castor oil	≥50 - ≤75	8001-79-4
1,3-Benzenediamine, 4-methyl-2,6-bis(methylthio)-	≥5 - ≤10	102093-68-5
Titanium dioxide	≥3 - ≤5	13463-67-7
1,3-Benzenediamine, 2-methyl-4,6-bis(methylthio)-	≥1 - ≤3	104983-85-9
Carbon black, respirable powder	≥0.3 - <1	1333-86-4

Any concentration shown as a range is to protect confidentiality or is due to batch variation.

There are no additional ingredients present which, within the current knowledge of the supplier and in the concentrations applicable, are classified as hazardous to health or the environment and hence require reporting in this section.

Occupational exposure limits, if available, are listed in Section 8.

Section 4. First aid measures

Description of necessary first aid measures

Eye contact : Immediately flush eyes with plenty of water, occasionally lifting the upper and lower eyelids. Check for and remove any contact lenses. Continue to rinse for at least 20 minutes. Get medical attention.

Section 4. First aid measures

Inhalation : Remove victim to fresh air and keep at rest in a position comfortable for breathing. If not breathing, if breathing is irregular or if respiratory arrest occurs, provide artificial respiration or oxygen by trained personnel. It may be dangerous to the person providing aid to give mouth-to-mouth resuscitation. Get medical attention. If unconscious, place in recovery position and get medical attention immediately. Maintain an open airway. Loosen tight clothing such as a collar, tie, belt or waistband. In case of inhalation of decomposition products in a fire, symptoms may be delayed. The exposed person may need to be kept under medical surveillance for 48 hours.

Skin contact : Wash with plenty of soap and water. Wash contaminated clothing thoroughly with water before removing it, or wear gloves. Continue to rinse for at least 20 minutes. Get medical attention. In the event of any complaints or symptoms, avoid further exposure. Wash clothing before reuse. Clean shoes thoroughly before reuse.

Ingestion : Wash out mouth with water. Remove dentures if any. Remove victim to fresh air and keep at rest in a position comfortable for breathing. If material has been swallowed and the exposed person is conscious, give small quantities of water to drink. Stop if the exposed person feels sick as vomiting may be dangerous. Do not induce vomiting unless directed to do so by medical personnel. If vomiting occurs, the head should be kept low so that vomit does not enter the lungs. Get medical attention. Never give anything by mouth to an unconscious person. If unconscious, place in recovery position and get medical attention immediately. Maintain an open airway. Loosen tight clothing such as a collar, tie, belt or waistband.

Most important symptoms/effects, acute and delayed

Potential acute health effects

Eye contact : Causes eye irritation.

Inhalation : No known significant effects or critical hazards.

Skin contact : Causes skin irritation. May cause an allergic skin reaction.

Ingestion : No known significant effects or critical hazards.

Over-exposure signs/symptoms

Eye contact : Adverse symptoms may include the following:
pain or irritation
watering
redness

Inhalation : No known significant effects or critical hazards.

Skin contact : Adverse symptoms may include the following:
irritation
redness

Ingestion : No known significant effects or critical hazards.

Indication of immediate medical attention and special treatment needed, if necessary

Notes to physician : In case of inhalation of decomposition products in a fire, symptoms may be delayed. The exposed person may need to be kept under medical surveillance for 48 hours.

Specific treatments : No specific treatment.

Protection of first-aiders : No action shall be taken involving any personal risk or without suitable training. It may be dangerous to the person providing aid to give mouth-to-mouth resuscitation. Wash contaminated clothing thoroughly with water before removing it, or wear gloves.

See toxicological information (Section 11)

Section 5. Fire-fighting measures

Extinguishing media

Suitable extinguishing media : Use an extinguishing agent suitable for the surrounding fire.

Unsuitable extinguishing media : None known.

Specific hazards arising from the chemical : This material is harmful to aquatic life with long lasting effects. Fire water contaminated with this material must be contained and prevented from being discharged to any waterway, sewer or drain.

Hazardous thermal decomposition products : Decomposition products may include the following materials:
carbon dioxide
carbon monoxide
nitrogen oxides
sulfur oxides
metal oxide/oxides

Special protective actions for fire-fighters : No special measures are required.

Special protective equipment for fire-fighters : Fire-fighters should wear appropriate protective equipment and self-contained breathing apparatus (SCBA) with a full face-piece operated in positive pressure mode.

Section 6. Accidental release measures

Personal precautions, protective equipment and emergency procedures

For non-emergency personnel : No action shall be taken involving any personal risk or without suitable training. Keep unnecessary and unprotected personnel from entering. Do not touch or walk through spilled material. Avoid breathing vapor or mist. Provide adequate ventilation. Wear appropriate respirator when ventilation is inadequate. Put on appropriate personal protective equipment.

For emergency responders : If specialized clothing is required to deal with the spillage, take note of any information in Section 8 on suitable and unsuitable materials. See also the information in "For non-emergency personnel".

Environmental precautions : Avoid dispersal of spilled material and runoff and contact with soil, waterways, drains and sewers. Inform the relevant authorities if the product has caused environmental pollution (sewers, waterways, soil or air). Water polluting material. May be harmful to the environment if released in large quantities.

Methods and materials for containment and cleaning up

Spill : Stop leak if without risk. Move containers from spill area. Approach release from upwind. Prevent entry into sewers, water courses, basements or confined areas. Wash spillages into an effluent treatment plant or proceed as follows. Contain and collect spillage with non-combustible, absorbent material e.g. sand, earth, vermiculite or diatomaceous earth and place in container for disposal according to local regulations (see Section 13). Dispose of via a licensed waste disposal contractor. Contaminated absorbent material may pose the same hazard as the spilled product. Note: see Section 1 for emergency contact information and Section 13 for waste disposal.

Section 7. Handling and storage

Precautions for safe handling

Protective measures : Put on appropriate personal protective equipment (see Section 8). Persons with a history of skin sensitization problems should not be employed in any process in which this product is used. Avoid exposure - obtain special instructions before use. Do not handle until all safety precautions have been read and understood. Do not get in eyes or on skin or clothing. Do not ingest. Avoid breathing vapor or mist. Avoid release to the environment. If during normal use the material presents a respiratory hazard, use only with adequate ventilation or wear appropriate respirator. Keep in the original container or an approved alternative made from a compatible material, kept tightly closed when not in use. Empty containers retain product residue and can be hazardous. Do not reuse container.

Advice on general occupational hygiene : Eating, drinking and smoking should be prohibited in areas where this material is handled, stored and processed. Workers should wash hands and face before eating, drinking and smoking. See also Section 8 for additional information on hygiene measures.

Conditions for safe storage, including any incompatibilities : Store in accordance with local regulations. Store in original container protected from direct sunlight in a dry, cool and well-ventilated area, away from incompatible materials (see Section 10) and food and drink. Store locked up. Keep container tightly closed and sealed until ready for use. Containers that have been opened must be carefully resealed and kept upright to prevent leakage. Do not store in unlabeled containers. Use appropriate containment to avoid environmental contamination.

Section 8. Exposure controls/personal protection

Control parameters

United States

Occupational exposure limits

Ingredient name	Exposure limits
Castor oil	None.
1,3-Benzenediamine, 4-methyl-2,6-bis(methylthio)-	None.
Titanium dioxide	**ACGIH TLV (United States, 3/2016).** TWA: 10 mg/m³ 8 hours. **OSHA PEL (United States, 6/2016).** TWA: 15 mg/m³ 8 hours. Form: Total dust
1,3-Benzenediamine, 2-methyl-4,6-bis(methylthio)-	None.
Carbon black, respirable powder	**NIOSH REL (United States, 10/2013).** TWA: 3.5 mg/m³ 10 hours. TWA: 0.1 mg of PAHs/cm² 10 hours. **OSHA PEL (United States, 6/2016).** TWA: 3.5 mg/m³ 8 hours. **ACGIH TLV (United States, 3/2016).** TWA: 3 mg/m³ 8 hours. Form: Inhalable fraction

Canada

Occupational exposure limits

Ingredient name	Exposure limits
Titanium dioxide	**CA Alberta Provincial (Canada, 4/2009).** 8 hrs OEL: 10 mg/m³ 8 hours. **CA British Columbia Provincial (Canada, 5/2015).** TWA: 3 mg/m³ 8 hours. Form: Respirable dust TWA: 10 mg/m³ 8 hours. Form: Total dust **CA Ontario Provincial (Canada, 7/2015).** TWA: 10 mg/m³ 8 hours. **CA Quebec Provincial (Canada, 1/2014).** TWAEV: 10 mg/m³ 8 hours. Form: Total dust **CA Saskatchewan Provincial (Canada, 7/2013).** STEL: 20 mg/m³ 15 minutes.

Section 8. Exposure controls/personal protection

Carbon black, respirable powder	TWA: 10 mg/m³ 8 hours. **CA British Columbia Provincial (Canada, 5/2015).** TWA: 3 mg/m³ 8 hours. Form: Inhalable **CA Alberta Provincial (Canada, 4/2009).** 8 hrs OEL: 3.5 mg/m³ 8 hours. **CA Quebec Provincial (Canada, 1/2014).** TWAEV: 3.5 mg/m³ 8 hours. **CA Ontario Provincial (Canada, 7/2015).** TWA: 3 mg/m³ 8 hours. Form: Inhalable fraction **CA Saskatchewan Provincial (Canada, 7/2013).** STEL: 7 mg/m³ 15 minutes. TWA: 3.5 mg/m³ 8 hours.

Appropriate engineering controls : If user operations generate dust, fumes, gas, vapor or mist, use process enclosures, local exhaust ventilation or other engineering controls to keep worker exposure to airborne contaminants below any recommended or statutory limits.

Environmental exposure controls : Emissions from ventilation or work process equipment should be checked to ensure they comply with the requirements of environmental protection legislation.

Individual protection measures

Hygiene measures : Wash hands, forearms and face thoroughly after handling chemical products, before eating, smoking and using the lavatory and at the end of the working period. Appropriate techniques should be used to remove potentially contaminated clothing. Contaminated work clothing should not be allowed out of the workplace. Wash contaminated clothing before reusing. Ensure that eyewash stations and safety showers are close to the workstation location.

Eye/face protection : Safety eyewear complying with an approved standard should be used when a risk assessment indicates this is necessary to avoid exposure to liquid splashes, mists, gases or dusts. If contact is possible, the following protection should be worn, unless the assessment indicates a higher degree of protection: chemical splash goggles.

Skin protection

Hand protection : Chemical-resistant, impervious gloves complying with an approved standard should be worn at all times when handling chemical products if a risk assessment indicates this is necessary. Considering the parameters specified by the glove manufacturer, check during use that the gloves are still retaining their protective properties. It should be noted that the time to breakthrough for any glove material may be different for different glove manufacturers. In the case of mixtures, consisting of several substances, the protection time of the gloves cannot be accurately estimated.

Body protection : Personal protective equipment for the body should be selected based on the task being performed and the risks involved and should be approved by a specialist before handling this product.

Other skin protection : Appropriate footwear and any additional skin protection measures should be selected based on the task being performed and the risks involved and should be approved by a specialist before handling this product.

Respiratory protection : Based on the hazard and potential for exposure, select a respirator that meets the appropriate standard or certification. Respirators must be used according to a respiratory protection program to ensure proper fitting, training, and other important aspects of use.

Section 9. Physical and chemical properties

Appearance		
Physical state	:	Liquid. [Viscous.]
Color	:	Varies.
Odor	:	Sweet.
Odor threshold	:	Not available.
pH	:	6 to 8 [Conc. (% w/w): 100%]
Melting point	:	Not available.
Boiling point	:	Not available.
Flash point	:	Closed cup: >93.3°C (>199.9°F)
Evaporation rate	:	Not available.
Flammability (solid, gas)	:	Not available.
Lower and upper explosive (flammable) limits	:	Not available.
Vapor pressure	:	Not available.
Vapor density	:	Not available.
Relative density	:	1.04 g/cm³
Solubility	:	Slightly soluble.
Partition coefficient: n-octanol/water	:	Not available.
Auto-ignition temperature	:	Not available.
Decomposition temperature	:	Not available.
Viscosity	:	Dynamic (room temperature): 3000 to 7000 mPa·s (3000 to 7000 cP)
Volatile organic compounds	:	< 5 g/L (calculated per SCAQMD rule 443.1)
Density	:	8.7 lbs/gal

Section 10. Stability and reactivity

Reactivity	:	No specific test data related to reactivity available for this product or its ingredients.
Chemical stability	:	This product is stable under normal conditions.
Possibility of hazardous reactions	:	Under normal conditions of storage and use, hazardous reactions will not occur.
Conditions to avoid	:	No specific data.
Incompatible materials	:	Reactive or incompatible with the following materials: oxidizing materials.
Hazardous decomposition products	:	Oxides of carbon and nitrogen.

Section 11. Toxicological information

Information on toxicological effects

Acute toxicity

Product/ingredient name	Result	Species	Dose	Exposure
Castor oil	LD50 Oral	Rat	10 g/kg	-
Carbon black, respirable powder	LD50 Oral	Rat	>15400 mg/kg	-

Irritation/Corrosion

Product/ingredient name	Result	Species	Score	Exposure	Observation
Castor oil	Eyes - Mild irritant	Rabbit	-	500 mg	-
	Skin - Mild irritant	Guinea pig	-	24 hours 100 mg	-
	Skin - Mild irritant	Man	-	48 hours 50 mg	-
	Skin - Mild irritant	Rat	-	24 hours 100 mg	-
	Skin - Severe irritant	Rabbit	-	24 hours 100 mg	-

Sensitization

There is no data available.

Mutagenicity

There is no data available.

Carcinogenicity

Classification

Product/ingredient name	OSHA	IARC	NTP	ACGIH	EPA	NIOSH
Titanium dioxide	-	2B	-	A4	-	+
Zeolites	-	3	-	A4	-	-
Carbon black, respirable powder	-	2B	-	A3	-	+

Reproductive toxicity

There is no data available.

Teratogenicity

There is no data available.

Specific target organ toxicity (single exposure)

There is no data available.

Specific target organ toxicity (repeated exposure)

There is no data available.

Aspiration hazard

There is no data available.

Information on the likely routes of exposure : Dermal contact. Eye contact. Inhalation. Ingestion.

Potential acute health effects

Eye contact : Causes eye irritation.

Inhalation : No known significant effects or critical hazards.

Skin contact : Causes skin irritation. May cause an allergic skin reaction.

Ingestion : No known significant effects or critical hazards.

Symptoms related to the physical, chemical and toxicological characteristics

Eye contact : Adverse symptoms may include the following:
pain or irritation
watering
redness

Inhalation : No known significant effects or critical hazards.

Section 11. Toxicological information

Skin contact : Adverse symptoms may include the following:
irritation
redness

Ingestion : No known significant effects or critical hazards.

Delayed and immediate effects and also chronic effects from short and long term exposure

Short term exposure

Potential immediate effects : No known significant effects or critical hazards.

Potential delayed effects : No known significant effects or critical hazards.

Long term exposure

Potential immediate effects : No known significant effects or critical hazards.

Potential delayed effects : No known significant effects or critical hazards.

Potential chronic health effects

General : Once sensitized, a severe allergic reaction may occur when subsequently exposed to very low levels.

Carcinogenicity : Suspected of causing cancer. Risk of cancer depends on duration and level of exposure.

Mutagenicity : No known significant effects or critical hazards.

Teratogenicity : No known significant effects or critical hazards.

Developmental effects : No known significant effects or critical hazards.

Fertility effects : No known significant effects or critical hazards.

Numerical measures of toxicity

Acute toxicity estimates

Route	ATE value
Oral	4347.8 mg/kg

Section 12. Ecological information

Toxicity

Product/ingredient name	Result	Species	Exposure
Titanium dioxide	Acute LC50 3 mg/L Fresh water	Crustaceans - Ceriodaphnia dubia - Neonate	48 hours
	Acute LC50 6.5 mg/L Fresh water	Daphnia - Daphnia pulex - Neonate	48 hours
	Acute LC50 >1000000 µg/L Marine water	Fish - Fundulus heteroclitus	96 hours
Carbon black, respirable powder	Acute EC50 37.563 mg/L Fresh water	Daphnia - Daphnia magna - Neonate	48 hours

Persistence and degradability

There is no data available.

Bioaccumulative potential

There is no data available.

Section 12. Ecological information

Mobility in soil

Soil/water partition coefficient (K_{oc}) : Not available.

Other adverse effects : No known significant effects or critical hazards.

Section 13. Disposal considerations

Disposal methods : The generation of waste should be avoided or minimized wherever possible. Disposal of this product, solutions and any by-products should comply with the requirements of environmental protection and waste disposal legislation and any regional local authority requirements. Dispose of surplus and non-recyclable products via a licensed waste disposal contractor. Waste should not be disposed of untreated to the sewer unless fully compliant with the requirements of all authorities with jurisdiction. Waste packaging should be recycled. Incineration or landfill should only be considered when recycling is not feasible. This material and its container must be disposed of in a safe way. Care should be taken when handling empty containers that have not been cleaned or rinsed out. Empty containers or liners may retain some product residues. Avoid dispersal of spilled material and runoff and contact with soil, waterways, drains and sewers.

Section 14. Transport information

	DOT	TDG	IMDG	IATA
UN number	Not regulated.	Not regulated.	Not regulated.	Not regulated.
UN proper shipping name	-	-	-	-
Transport hazard class(es)	-	-	-	-
Packing group	-	-	-	-
Environmental hazards	No.	No.	No.	No.
Additional information	-	-	-	-

AERG : Not applicable.

Special precautions for user : **Transport within user's premises:** always transport in closed containers that are upright and secure. Ensure that persons transporting the product know what to do in the event of an accident or spillage.

Section 15. Regulatory information

U.S. Federal regulations : **TSCA 8(a) PAIR**: Dimethylbis[(1-oxoneodecyl)oxy]stannane
TSCA 8(a) CDR Exempt/Partial exemption: Not determined
United States inventory (TSCA 8b): Not determined.

Section 15. Regulatory information

Clean Air Act Section 112 (b) Hazardous Air Pollutants (HAPs) : Not listed

Clean Air Act Section 602 Class I Substances : Not listed

Clean Air Act Section 602 Class II Substances : Not listed

DEA List I Chemicals (Precursor Chemicals) : Not listed

DEA List II Chemicals (Essential Chemicals) : Not listed

SARA 302/304

Composition/information on ingredients

No products were found.

SARA 304 RQ : Not applicable.

SARA 311/312

Classification : Immediate (acute) health hazard
Delayed (chronic) health hazard

Composition/information on ingredients

Name	Fire hazard	Sudden release of pressure	Reactive	Immediate (acute) health hazard	Delayed (chronic) health hazard
Castor oil	No.	No.	No.	Yes.	No.
1,3-Benzenediamine, 4-methyl-2,6-bis(methylthio)-	No.	No.	No.	Yes.	No.
Titanium dioxide	No.	No.	No.	No.	Yes.
1,3-Benzenediamine, 2-methyl-4,6-bis(methylthio)-	No.	No.	No.	Yes.	No.
Carbon black, respirable powder	No.	No.	No.	No.	Yes.

SARA 313

There is no data available.

State regulations

Massachusetts : The following components are listed: Titanium dioxide

New York : None of the components are listed.

New Jersey : The following components are listed: Titanium dioxide; Carbon black, respirable powder

Pennsylvania : The following components are listed: Titanium dioxide; Carbon black, respirable powder

California Prop. 65

WARNING: This product contains a chemical known to the State of California to cause cancer.

Ingredient name	Cancer	Reproductive	No significant risk level	Maximum acceptable dosage level
Titanium dioxide	Yes.	No.	No.	No.
Carbon black, respirable powder	Yes.	No.	No.	No.

Canada

Canadian lists

Canadian NPRI : None of the components are listed.

CEPA Toxic substances : None of the components are listed.

Section 15. Regulatory information

Canada inventory : Not determined.

Section 16. Other information

Hazardous Material Information System (U.S.A.) :

Health	*	3
Fire hazard		1
Reactivity		0
Personal protection		

Caution: HMIS® ratings are based on a 0-4 rating scale, with 0 representing minimal hazards or risks, and 4 representing significant hazards or risks Although HMIS® ratings are not required on SDSs under 29 CFR 1910.1200, the preparer may choose to provide them. HMIS® ratings are to be used with a fully implemented HMIS® program. HMIS® is a registered mark of the National Paint & Coatings Association (NPCA). HMIS® materials may be purchased exclusively from J. J. Keller (800) 327-6868.

The customer is responsible for determining the PPE code for this material.

Procedure used to derive the classification

Classification	Justification
SKIN IRRITATION - Category 2	Calculation method
EYE IRRITATION - Category 2B	Calculation method
SKIN SENSITIZATION - Category 1	Calculation method
CARCINOGENICITY - Category 2	Calculation method
AQUATIC HAZARD (ACUTE) - Category 3	Calculation method
AQUATIC HAZARD (LONG-TERM) - Category 3	Calculation method

History

Date of issue mm/dd/yyyy : 12/30/2016

Version : 1

Prepared by : KMK Regulatory Services Inc.

Notice to reader

To the best of our knowledge, the information contained herein is accurate. However, neither the above-named supplier, nor any of its subsidiaries, assumes any liability whatsoever for the accuracy or completeness of the information contained herein.
Final determination of suitability of any material is the sole responsibility of the user. All materials may present unknown hazards and should be used with caution. Although certain hazards are described herein, we cannot guarantee that these are the only hazards that exist.

SAFETY DATA SHEET

B62TZ104

Section 1. Identification

Product name : TILE-CLAD® HS High Solids Epoxy (Part A)
Ultra Deep Base

Product code : B62TZ104

Other means of identification : Not available.

Product type : Liquid.

Relevant identified uses of the substance or mixture and uses advised against

Paint or paint related material.

Manufacturer : THE SHERWIN-WILLIAMS COMPANY
101 W. Prospect Avenue
Cleveland, OH 44115

Emergency telephone number of the company : US / Canada: (800) 424-9300
Mexico: SETIQ 800-00-214-00 / 55-5559-1588 Available 24 hours and 365 days a year

Product Information Telephone Number : US / Canada: (800) 524-5979
Mexico: Not Available

Regulatory Information Telephone Number : US / Canada: (216) 566-2902
Mexico: Not Available

Transportation Emergency Telephone Number : US / Canada: (800) 424-9300
Mexico: SETIQ 800-00-214-00 / 55-5559-1588 Available 24 hours and 365 days a year

Section 2. Hazards identification

OSHA/HCS status : This material is considered hazardous by the OSHA Hazard Communication Standard (29 CFR 1910.1200).

Classification of the substance or mixture : FLAMMABLE LIQUIDS - Category 3
SKIN CORROSION/IRRITATION - Category 2
SERIOUS EYE DAMAGE/ EYE IRRITATION - Category 1
SKIN SENSITIZATION - Category 1
CARCINOGENICITY - Category 1A
TOXIC TO REPRODUCTION - Category 2
SPECIFIC TARGET ORGAN TOXICITY (SINGLE EXPOSURE) (Respiratory tract irritation) - Category 3
SPECIFIC TARGET ORGAN TOXICITY (REPEATED EXPOSURE) - Category 1
ASPIRATION HAZARD - Category 1

Percentage of the mixture consisting of ingredient(s) of unknown acute toxicity: 36.8% (oral), 38.3% (dermal), 44.8% (inhalation)

GHS label elements

Hazard pictograms :

Section 2. Hazards identification

Signal word : Danger

Hazard statements : Flammable liquid and vapor.
May be fatal if swallowed and enters airways.
Causes skin irritation.
May cause an allergic skin reaction.
Causes serious eye damage.
May cause respiratory irritation.
May cause cancer.
Suspected of damaging fertility or the unborn child.
Causes damage to organs through prolonged or repeated exposure. (lungs)

Precautionary statements

Prevention : Obtain special instructions before use. Do not handle until all safety precautions have been read and understood. Wear protective gloves, protective clothing and eye or face protection. Keep away from heat, hot surfaces, sparks, open flames and other ignition sources. No smoking. Use explosion-proof electrical, ventilating or lighting equipment. Use non-sparking tools. Take action to prevent static discharges. Use only outdoors or in a well-ventilated area. Do not breathe vapor. Do not eat, drink or smoke when using this product. Wash thoroughly after handling. Contaminated work clothing must not be allowed out of the workplace.

Response : IF exposed or concerned: Get medical advice or attention. IF INHALED: Remove person to fresh air and keep comfortable for breathing. Call a POISON CENTER or doctor if you feel unwell. IF SWALLOWED: Immediately call a POISON CENTER or doctor. Do NOT induce vomiting. IF ON SKIN (or hair): Take off immediately all contaminated clothing. Rinse skin with water. Wash contaminated clothing before reuse. IF ON SKIN: Wash with plenty of water. If skin irritation or rash occurs: Get medical advice or attention. IF IN EYES: Rinse cautiously with water for several minutes. Remove contact lenses, if present and easy to do. Continue rinsing. Immediately call a POISON CENTER or doctor.

Storage : Store locked up. Store in a well-ventilated place. Keep container tightly closed. Keep cool.

Disposal : Dispose of contents and container in accordance with all local, regional, national and international regulations.

Supplemental label elements

DELAYED EFFECTS FROM LONG TERM OVEREXPOSURE. Contains solvents which can cause permanent brain and nervous system damage. Intentional misuse by deliberately concentrating and inhaling the contents can be harmful or fatal. WARNING: This product contains chemicals known to the State of California to cause cancer and birth defects or other reproductive harm. FOR INDUSTRIAL USE ONLY. Contains Formaldehyde - a potential cancer hazard. This product must be mixed with other components before use. Before opening the packages, READ AND FOLLOW WARNING LABELS ON ALL COMPONENTS.

Please refer to the SDS for additional information. Keep out of reach of children. Do not transfer contents to other containers for storage.

Hazards not otherwise classified : None known.

Section 3. Composition/information on ingredients

Substance/mixture : Mixture

Other means of identification : Not available.

CAS number/other identifiers

Section 3. Composition/information on ingredients

Ingredient name	% by weight	CAS number
Polyamidoamine	≥25 - ≤50	68082-29-1
Xylene, mixed isomers	≤9.6	1330-20-7
1-Methoxy-2-propanol	≤8.9	107-98-2
Kaolin	≤10	1332-58-7
2-Butoxyethanol	≤3.9	111-76-2
Ethylbenzene	≤3.5	100-41-4
Light Aromatic Hydrocarbons	≤3	64742-95-6
trimethylbenzene	≤2.1	25551-13-7
Heavy Aliphatic Solvent	<1	64742-82-1
1,2,4-Trimethylbenzene	<1	95-63-6
1,3,5-Trimethylbenzene	<1	108-67-8
Toluene	<1	108-88-3
Triethylene Tetramine	≤0.3	112-24-3
Cumene	≤0.3	98-82-8
1,2,3-Trimethylbenzene	≤0.3	526-73-8
Med. Aliphatic Hydrocarbon Solvent	≤0.3	64742-88-7
Formaldehyde (max.)	<0.1	50-00-0

Any concentration shown as a range is to protect confidentiality or is due to batch variation.

There are no additional ingredients present which, within the current knowledge of the supplier and in the concentrations applicable, are classified and hence require reporting in this section.

Occupational exposure limits, if available, are listed in Section 8.

Section 4. First aid measures

Description of necessary first aid measures

Eye contact : Get medical attention immediately. Call a poison center or physician. Immediately flush eyes with plenty of water, occasionally lifting the upper and lower eyelids. Check for and remove any contact lenses. Continue to rinse for at least 10 minutes. Chemical burns must be treated promptly by a physician.

Inhalation : Get medical attention immediately. Call a poison center or physician. Remove victim to fresh air and keep at rest in a position comfortable for breathing. If it is suspected that fumes are still present, the rescuer should wear an appropriate mask or self-contained breathing apparatus. If not breathing, if breathing is irregular or if respiratory arrest occurs, provide artificial respiration or oxygen by trained personnel. It may be dangerous to the person providing aid to give mouth-to-mouth resuscitation. If unconscious, place in recovery position and get medical attention immediately. Maintain an open airway. Loosen tight clothing such as a collar, tie, belt or waistband. In case of inhalation of decomposition products in a fire, symptoms may be delayed. The exposed person may need to be kept under medical surveillance for 48 hours.

Skin contact : Get medical attention immediately. Call a poison center or physician. Wash with plenty of soap and water. Remove contaminated clothing and shoes. Wash contaminated clothing thoroughly with water before removing it, or wear gloves. Continue to rinse for at least 10 minutes. Chemical burns must be treated promptly by a physician. In the event of any complaints or symptoms, avoid further exposure. Wash clothing before reuse. Clean shoes thoroughly before reuse.

Ingestion : Get medical attention immediately. Call a poison center or physician. Wash out mouth with water. Remove dentures if any. If material has been swallowed and the exposed person is conscious, give small quantities of water to drink. Stop if the exposed person feels sick as vomiting may be dangerous. Aspiration hazard if swallowed. Can enter lungs and cause damage. Do not induce vomiting. If vomiting occurs, the head should be kept low so that vomit does not enter the lungs. Chemical burns must be treated promptly by a physician. Never give anything by mouth to an unconscious person. If unconscious, place in recovery position and get medical attention immediately. Maintain an open airway. Loosen tight clothing such as a collar, tie, belt or waistband.

Section 4. First aid measures

Most important symptoms/effects, acute and delayed

Potential acute health effects

Eye contact : Causes serious eye damage.

Inhalation : May cause respiratory irritation.

Skin contact : Causes skin irritation. May cause an allergic skin reaction.

Ingestion : May be fatal if swallowed and enters airways.

Over-exposure signs/symptoms

Eye contact : Adverse symptoms may include the following:
pain
watering
redness

Inhalation : Adverse symptoms may include the following:
respiratory tract irritation
coughing
reduced fetal weight
increase in fetal deaths
skeletal malformations

Skin contact : Adverse symptoms may include the following:
pain or irritation
redness
blistering may occur
reduced fetal weight
increase in fetal deaths
skeletal malformations

Ingestion : Adverse symptoms may include the following:
stomach pains
nausea or vomiting
reduced fetal weight
increase in fetal deaths
skeletal malformations

Indication of immediate medical attention and special treatment needed, if necessary

Notes to physician : In case of inhalation of decomposition products in a fire, symptoms may be delayed. The exposed person may need to be kept under medical surveillance for 48 hours.

Specific treatments : No specific treatment.

Protection of first-aiders : No action shall be taken involving any personal risk or without suitable training. If it is suspected that fumes are still present, the rescuer should wear an appropriate mask or self-contained breathing apparatus. It may be dangerous to the person providing aid to give mouth-to-mouth resuscitation. Wash contaminated clothing thoroughly with water before removing it, or wear gloves.

See toxicological information (Section 11)

Section 5. Fire-fighting measures

Extinguishing media

Suitable extinguishing media : Use dry chemical, CO_2, water spray (fog) or foam.

Unsuitable extinguishing media : Do not use water jet.

Section 5. Fire-fighting measures

Specific hazards arising from the chemical : Flammable liquid and vapor. Runoff to sewer may create fire or explosion hazard. In a fire or if heated, a pressure increase will occur and the container may burst, with the risk of a subsequent explosion. The vapor/gas is heavier than air and will spread along the ground. Vapors may accumulate in low or confined areas or travel a considerable distance to a source of ignition and flash back.

Hazardous thermal decomposition products : Decomposition products may include the following materials:
carbon dioxide
carbon monoxide
nitrogen oxides

Special protective actions for fire-fighters : Promptly isolate the scene by removing all persons from the vicinity of the incident if there is a fire. No action shall be taken involving any personal risk or without suitable training. Move containers from fire area if this can be done without risk. Use water spray to keep fire-exposed containers cool.

Special protective equipment for fire-fighters : Fire-fighters should wear appropriate protective equipment and self-contained breathing apparatus (SCBA) with a full face-piece operated in positive pressure mode.

Section 6. Accidental release measures

Personal precautions, protective equipment and emergency procedures

For non-emergency personnel : No action shall be taken involving any personal risk or without suitable training. Evacuate surrounding areas. Keep unnecessary and unprotected personnel from entering. Do not touch or walk through spilled material. Shut off all ignition sources. No flares, smoking or flames in hazard area. Do not breathe vapor or mist. Provide adequate ventilation. Wear appropriate respirator when ventilation is inadequate. Put on appropriate personal protective equipment.

For emergency responders : If specialized clothing is required to deal with the spillage, take note of any information in Section 8 on suitable and unsuitable materials. See also the information in "For non-emergency personnel".

Environmental precautions : Avoid dispersal of spilled material and runoff and contact with soil, waterways, drains and sewers. Inform the relevant authorities if the product has caused environmental pollution (sewers, waterways, soil or air).

Methods and materials for containment and cleaning up

Small spill : Stop leak if without risk. Move containers from spill area. Use spark-proof tools and explosion-proof equipment. Dilute with water and mop up if water-soluble. Alternatively, or if water-insoluble, absorb with an inert dry material and place in an appropriate waste disposal container. Dispose of via a licensed waste disposal contractor.

Large spill : Stop leak if without risk. Move containers from spill area. Use spark-proof tools and explosion-proof equipment. Approach release from upwind. Prevent entry into sewers, water courses, basements or confined areas. Wash spillages into an effluent treatment plant or proceed as follows. Contain and collect spillage with non-combustible, absorbent material e.g. sand, earth, vermiculite or diatomaceous earth and place in container for disposal according to local regulations (see Section 13). Dispose of via a licensed waste disposal contractor. Contaminated absorbent material may pose the same hazard as the spilled product. Note: see Section 1 for emergency contact information and Section 13 for waste disposal.

Section 7. Handling and storage

Precautions for safe handling

Protective measures : Contains a formaldehyde-based resin which, under certain conditions of use, may release formaldehyde. Put on appropriate personal protective equipment (see Section 8). Persons with a history of skin sensitization problems should not be employed in any process in which this product is used. Avoid exposure - obtain special instructions before use. Avoid exposure during pregnancy. Do not handle until all safety precautions have been read and understood. Do not get in eyes or on skin or clothing. Do not breathe vapor or mist. Do not swallow. Use only with adequate ventilation. Wear appropriate respirator when ventilation is inadequate. Do not enter storage areas and confined spaces unless adequately ventilated. Keep in the original container or an approved alternative made from a compatible material, kept tightly closed when not in use. Store and use away from heat, sparks, open flame or any other ignition source. Use explosion-proof electrical (ventilating, lighting and material handling) equipment. Use only non-sparking tools. Take precautionary measures against electrostatic discharges. Empty containers retain product residue and can be hazardous. Do not reuse container.

Advice on general occupational hygiene : Eating, drinking and smoking should be prohibited in areas where this material is handled, stored and processed. Workers should wash hands and face before eating, drinking and smoking. Remove contaminated clothing and protective equipment before entering eating areas. See also Section 8 for additional information on hygiene measures.

Conditions for safe storage, including any incompatibilities : Store in accordance with local regulations. Store in a segregated and approved area. Store in original container protected from direct sunlight in a dry, cool and well-ventilated area, away from incompatible materials (see Section 10) and food and drink. Store locked up. Eliminate all ignition sources. Separate from oxidizing materials. Keep container tightly closed and sealed until ready for use. Containers that have been opened must be carefully resealed and kept upright to prevent leakage. Do not store in unlabeled containers. Use appropriate containment to avoid environmental contamination. See Section 10 for incompatible materials before handling or use.

Section 8. Exposure controls/personal protection

Control parameters

Occupational exposure limits (OSHA United States)

Ingredient name	CAS #	Exposure limits
Polyamidoamine	68082-29-1	None.
Xylene, mixed isomers	1330-20-7	**ACGIH TLV (United States, 1/2021).** TWA: 100 ppm 8 hours. TWA: 434 mg/m³ 8 hours. STEL: 150 ppm 15 minutes. STEL: 651 mg/m³ 15 minutes. **OSHA PEL (United States, 5/2018).** TWA: 100 ppm 8 hours. TWA: 435 mg/m³ 8 hours.
1-Methoxy-2-propanol	107-98-2	**ACGIH TLV (United States, 1/2021).** TWA: 50 ppm 8 hours. TWA: 184 mg/m³ 8 hours. STEL: 100 ppm 15 minutes. STEL: 369 mg/m³ 15 minutes. **NIOSH REL (United States, 10/2020).** TWA: 100 ppm 10 hours. TWA: 360 mg/m³ 10 hours. STEL: 150 ppm 15 minutes. STEL: 540 mg/m³ 15 minutes.
Kaolin	1332-58-7	**ACGIH TLV (United States, 1/2021).**

Section 8. Exposure controls/personal protection

		TWA: 2 mg/m³ 8 hours. Form: Respirable fraction **NIOSH REL (United States, 10/2020).** TWA: 5 mg/m³ 10 hours. Form: Respirable fraction TWA: 10 mg/m³ 10 hours. Form: Total **OSHA PEL (United States, 5/2018).** TWA: 5 mg/m³ 8 hours. Form: Respirable fraction TWA: 15 mg/m³ 8 hours. Form: Total dust
2-Butoxyethanol	111-76-2	**ACGIH TLV (United States, 1/2021).** TWA: 20 ppm 8 hours. **NIOSH REL (United States, 10/2020).** **Absorbed through skin.** TWA: 5 ppm 10 hours. TWA: 24 mg/m³ 10 hours. **OSHA PEL (United States, 5/2018).** **Absorbed through skin.** TWA: 50 ppm 8 hours. TWA: 240 mg/m³ 8 hours.
Ethylbenzene	100-41-4	**ACGIH TLV (United States, 1/2021).** TWA: 20 ppm 8 hours. **NIOSH REL (United States, 10/2020).** TWA: 100 ppm 10 hours. TWA: 435 mg/m³ 10 hours. STEL: 125 ppm 15 minutes. STEL: 545 mg/m³ 15 minutes. **OSHA PEL (United States, 5/2018).** TWA: 100 ppm 8 hours. TWA: 435 mg/m³ 8 hours.
Light Aromatic Hydrocarbons trimethylbenzene	64742-95-6 25551-13-7	None. **ACGIH TLV (United States, 1/2021).** TWA: 25 ppm 8 hours. TWA: 123 mg/m³ 8 hours.
Heavy Aliphatic Solvent 1,2,4-Trimethylbenzene	64742-82-1 95-63-6	None. **ACGIH TLV (United States, 1/2021).** TWA: 25 ppm 8 hours. TWA: 123 mg/m³ 8 hours. **NIOSH REL (United States, 10/2020).** TWA: 25 ppm 10 hours. TWA: 125 mg/m³ 10 hours.
1,3,5-Trimethylbenzene	108-67-8	**ACGIH TLV (United States, 1/2021).** TWA: 25 ppm 8 hours. TWA: 123 mg/m³ 8 hours. **NIOSH REL (United States, 10/2020).** TWA: 25 ppm 10 hours. TWA: 125 mg/m³ 10 hours.
Toluene	108-88-3	**OSHA PEL Z2 (United States, 2/2013).** TWA: 200 ppm 8 hours. CEIL: 300 ppm AMP: 500 ppm 10 minutes. **NIOSH REL (United States, 10/2020).** TWA: 100 ppm 10 hours. TWA: 375 mg/m³ 10 hours. STEL: 150 ppm 15 minutes. STEL: 560 mg/m³ 15 minutes. **ACGIH TLV (United States, 1/2021).**

Section 8. Exposure controls/personal protection

		Ototoxicant. TWA: 20 ppm 8 hours.
Triethylene Tetramine	112-24-3	**OARS WEEL (United States, 1/2021). Absorbed through skin.** TWA: 1 ppm 8 hours.
Cumene	98-82-8	**ACGIH TLV (United States, 1/2021).** TWA: 5 ppm 8 hours. **NIOSH REL (United States, 10/2020). Absorbed through skin.** TWA: 50 ppm 10 hours. TWA: 245 mg/m³ 10 hours. **OSHA PEL (United States, 5/2018). Absorbed through skin.** TWA: 50 ppm 8 hours. TWA: 245 mg/m³ 8 hours.
1,2,3-Trimethylbenzene	526-73-8	**ACGIH TLV (United States, 1/2021).** TWA: 25 ppm 8 hours. TWA: 123 mg/m³ 8 hours. **NIOSH REL (United States, 10/2020).** TWA: 25 ppm 10 hours. TWA: 125 mg/m³ 10 hours.
Med. Aliphatic Hydrocarbon Solvent	64742-88-7	**OSHA PEL (United States, 5/2018).** TWA: 100 ppm 8 hours. TWA: 400 mg/m³ 8 hours.
Formaldehyde (max.)	50-00-0	**OSHA PEL Z2 (United States, 2/2013).** TWA: 0.75 ppm 8 hours. STEL: 2 ppm 15 minutes. **NIOSH REL (United States, 10/2020).** TWA: 0.016 ppm 10 hours. CEIL: 0.1 ppm 15 minutes. **OSHA PEL (United States, 5/2018).** TWA: 0.75 ppm 8 hours. STEL: 2 ppm 15 minutes. **ACGIH TLV (United States, 1/2021). Skin sensitizer. Inhalation sensitizer.** STEL: 0.3 ppm 15 minutes. TWA: 0.1 ppm 8 hours.

Occupational exposure limits (Canada)

Ingredient name	CAS #	Exposure limits
Xylene	1330-20-7	**CA Alberta Provincial (Canada, 6/2018).** 8 hrs OEL: 100 ppm 8 hours. 15 min OEL: 651 mg/m³ 15 minutes. 15 min OEL: 150 ppm 15 minutes. 8 hrs OEL: 434 mg/m³ 8 hours. **CA British Columbia Provincial (Canada, 1/2021).** TWA: 100 ppm 8 hours. STEL: 150 ppm 15 minutes. **CA Quebec Provincial (Canada, 7/2019).** TWAEV: 100 ppm 8 hours. TWAEV: 434 mg/m³ 8 hours. STEV: 150 ppm 15 minutes. STEV: 651 mg/m³ 15 minutes. **CA Ontario Provincial (Canada, 6/2019).** STEL: 150 ppm 15 minutes.

Section 8. Exposure controls/personal protection

		TWA: 100 ppm 8 hours. **CA Saskatchewan Provincial (Canada, 7/2013).** STEL: 150 ppm 15 minutes. TWA: 100 ppm 8 hours.
Propylene glycol monomethyl ether	107-98-2	**CA Alberta Provincial (Canada, 6/2018).** 8 hrs OEL: 100 ppm 8 hours. 15 min OEL: 553 mg/m³ 15 minutes. 8 hrs OEL: 369 mg/m³ 8 hours. 15 min OEL: 150 ppm 15 minutes. **CA British Columbia Provincial (Canada, 1/2021).** STEL: 100 ppm 15 minutes. TWA: 50 ppm 8 hours. **CA Ontario Provincial (Canada, 6/2019).** TWA: 50 ppm 8 hours. STEL: 100 ppm 15 minutes. **CA Quebec Provincial (Canada, 7/2019).** TWAEV: 100 ppm 8 hours. TWAEV: 369 mg/m³ 8 hours. STEV: 150 ppm 15 minutes. STEV: 553 mg/m³ 15 minutes. **CA Saskatchewan Provincial (Canada, 7/2013).** STEL: 150 ppm 15 minutes. TWA: 100 ppm 8 hours.
Kaolin	1332-58-7	**CA Alberta Provincial (Canada, 6/2018).** 8 hrs OEL: 2 mg/m³ 8 hours. Form: Respirable **CA British Columbia Provincial (Canada, 1/2021).** TWA: 2 mg/m³ 8 hours. Form: Respirable **CA Quebec Provincial (Canada, 7/2019).** TWAEV: 5 mg/m³ 8 hours. Form: Respirable dust. **CA Ontario Provincial (Canada, 6/2019).** TWA: 2 mg/m³ 8 hours. Form: Respirable particulate matter. **CA Saskatchewan Provincial (Canada, 7/2013).** STEL: 4 mg/m³ 15 minutes. Form: respirable fraction TWA: 2 mg/m³ 8 hours. Form: respirable fraction
Ethylene glycol monobutyl ether	111-76-2	**CA Alberta Provincial (Canada, 6/2018).** 8 hrs OEL: 97 mg/m³ 8 hours. 8 hrs OEL: 20 ppm 8 hours. **CA British Columbia Provincial (Canada, 1/2021).** TWA: 20 ppm 8 hours. **CA Ontario Provincial (Canada, 6/2019).** TWA: 20 ppm 8 hours. **CA Quebec Provincial (Canada, 7/2019).** TWAEV: 20 ppm 8 hours. TWAEV: 97 mg/m³ 8 hours. **CA Saskatchewan Provincial (Canada, 7/2013).**

Section 8. Exposure controls/personal protection

		STEL: 30 ppm 15 minutes. TWA: 20 ppm 8 hours.
Ethylbenzene	100-41-4	**CA Alberta Provincial (Canada, 6/2018).** 8 hrs OEL: 100 ppm 8 hours. 8 hrs OEL: 434 mg/m³ 8 hours. 15 min OEL: 543 mg/m³ 15 minutes. 15 min OEL: 125 ppm 15 minutes. **CA British Columbia Provincial (Canada, 1/2021).** TWA: 20 ppm 8 hours. **CA Ontario Provincial (Canada, 6/2019).** TWA: 20 ppm 8 hours. **CA Quebec Provincial (Canada, 7/2019).** TWAEV: 100 ppm 8 hours. TWAEV: 434 mg/m³ 8 hours. STEV: 125 ppm 15 minutes. STEV: 543 mg/m³ 15 minutes. **CA Saskatchewan Provincial (Canada, 7/2013).** STEL: 125 ppm 15 minutes. TWA: 100 ppm 8 hours.
Trimethylbenzene	25551-13-7	**CA Alberta Provincial (Canada, 6/2018).** 8 hrs OEL: 123 mg/m³ 8 hours. 8 hrs OEL: 25 ppm 8 hours. **CA British Columbia Provincial (Canada, 1/2021).** TWA: 25 ppm 8 hours. **CA Quebec Provincial (Canada, 7/2019).** TWAEV: 25 ppm 8 hours. TWAEV: 123 mg/m³ 8 hours. **CA Ontario Provincial (Canada, 6/2019).** TWA: 25 ppm 8 hours. **CA Saskatchewan Provincial (Canada, 7/2013).** STEL: 30 ppm 15 minutes. TWA: 25 ppm 8 hours.
Toluene	108-88-3	**CA Alberta Provincial (Canada, 6/2018). Absorbed through skin.** 8 hrs OEL: 50 ppm 8 hours. 8 hrs OEL: 188 mg/m³ 8 hours. **CA British Columbia Provincial (Canada, 1/2021).** TWA: 20 ppm 8 hours. **CA Ontario Provincial (Canada, 6/2019).** TWA: 20 ppm 8 hours. **CA Quebec Provincial (Canada, 7/2019). Absorbed through skin.** TWAEV: 50 ppm 8 hours. TWAEV: 188 mg/m³ 8 hours. **CA Saskatchewan Provincial (Canada, 7/2013). Absorbed through skin.** STEL: 60 ppm 15 minutes. TWA: 50 ppm 8 hours.
Triethylenetetramine	112-24-3	**CA Ontario Provincial (Canada, 6/2019). Absorbed through skin.** TWA: 3 mg/m³ 8 hours. TWA: 0.5 ppm 8 hours.

Section 8. Exposure controls/personal protection

Ethyl alcohol	64-17-5	**CA Alberta Provincial (Canada, 6/2018).** 8 hrs OEL: 1000 ppm 8 hours. 8 hrs OEL: 1880 mg/m³ 8 hours. **CA British Columbia Provincial (Canada, 1/2021).** STEL: 1000 ppm 15 minutes. **CA Ontario Provincial (Canada, 6/2019).** STEL: 1000 ppm 15 minutes. **CA Quebec Provincial (Canada, 7/2019).** TWAEV: 1000 ppm 8 hours. TWAEV: 1880 mg/m³ 8 hours. **CA Saskatchewan Provincial (Canada, 7/2013).** STEL: 1250 ppm 15 minutes. TWA: 1000 ppm 8 hours.
Cumene	98-82-8	**CA Alberta Provincial (Canada, 6/2018).** 8 hrs OEL: 50 ppm 8 hours. 8 hrs OEL: 246 mg/m³ 8 hours. **CA British Columbia Provincial (Canada, 1/2021).** TWA: 25 ppm 8 hours. STEL: 75 ppm 15 minutes. **CA Ontario Provincial (Canada, 6/2019).** TWA: 50 ppm 8 hours. **CA Quebec Provincial (Canada, 7/2019).** TWAEV: 50 ppm 8 hours. TWAEV: 246 mg/m³ 8 hours. **CA Saskatchewan Provincial (Canada, 7/2013).** STEL: 74 ppm 15 minutes. TWA: 50 ppm 8 hours.

Occupational exposure limits (Mexico)

	CAS #	Exposure limits
Xylene, mixed isomers	1330-20-7	**NOM-010-STPS-2014 (Mexico, 4/2016).** STEL: 150 ppm 15 minutes. TWA: 100 ppm 8 hours.
1-Methoxy-2-propanol	107-98-2	**NOM-010-STPS-2014 (Mexico, 4/2016).** STEL: 150 ppm 15 minutes. TWA: 100 ppm 8 hours.
2-Butoxyethanol	111-76-2	**NOM-010-STPS-2014 (Mexico, 4/2016).** TWA: 20 ppm 8 hours.
Ethylbenzene	100-41-4	**NOM-010-STPS-2014 (Mexico, 4/2016).** TWA: 20 ppm 8 hours.
trimethylbenzene	25551-13-7	**NOM-010-STPS-2014 (Mexico, 4/2016).** TWA: 25 ppm 8 hours.
Toluene	108-88-3	**NOM-010-STPS-2014 (Mexico, 4/2016).** TWA: 20 ppm 8 hours.
Formaldehyde (max.)	50-00-0	**NOM-010-STPS-2014 (Mexico, 4/2016). Skin sensitizer.** CEIL: 0.3 ppm

Section 8. Exposure controls/personal protection

Appropriate engineering controls : Use only with adequate ventilation. Use process enclosures, local exhaust ventilation or other engineering controls to keep worker exposure to airborne contaminants below any recommended or statutory limits. The engineering controls also need to keep gas, vapor or dust concentrations below any lower explosive limits. Use explosion-proof ventilation equipment.

Environmental exposure controls : Emissions from ventilation or work process equipment should be checked to ensure they comply with the requirements of environmental protection legislation. In some cases, fume scrubbers, filters or engineering modifications to the process equipment will be necessary to reduce emissions to acceptable levels.

Individual protection measures

Hygiene measures : Wash hands, forearms and face thoroughly after handling chemical products, before eating, smoking and using the lavatory and at the end of the working period. Appropriate techniques should be used to remove potentially contaminated clothing. Contaminated work clothing should not be allowed out of the workplace. Wash contaminated clothing before reusing. Ensure that eyewash stations and safety showers are close to the workstation location.

Eye/face protection : Safety eyewear complying with an approved standard should be used when a risk assessment indicates this is necessary to avoid exposure to liquid splashes, mists, gases or dusts. If contact is possible, the following protection should be worn, unless the assessment indicates a higher degree of protection: chemical splash goggles and/ or face shield. If inhalation hazards exist, a full-face respirator may be required instead.

Skin protection

Hand protection : Chemical-resistant, impervious gloves complying with an approved standard should be worn at all times when handling chemical products if a risk assessment indicates this is necessary. Considering the parameters specified by the glove manufacturer, check during use that the gloves are still retaining their protective properties. It should be noted that the time to breakthrough for any glove material may be different for different glove manufacturers. In the case of mixtures, consisting of several substances, the protection time of the gloves cannot be accurately estimated.

Body protection : Personal protective equipment for the body should be selected based on the task being performed and the risks involved and should be approved by a specialist before handling this product. When there is a risk of ignition from static electricity, wear anti-static protective clothing. For the greatest protection from static discharges, clothing should include anti-static overalls, boots and gloves.

Other skin protection : Appropriate footwear and any additional skin protection measures should be selected based on the task being performed and the risks involved and should be approved by a specialist before handling this product.

Respiratory protection : Based on the hazard and potential for exposure, select a respirator that meets the appropriate standard or certification. Respirators must be used according to a respiratory protection program to ensure proper fitting, training, and other important aspects of use.

Section 9. Physical and chemical properties

The conditions of measurement of all properties are at standard temperature and pressure unless otherwise indicated.

Appearance

Physical state : Liquid.

Color : Not available.

Odor : Not available.

Odor threshold : Not available.

pH : Not applicable.

Melting point/freezing point : Not available.

Section 9. Physical and chemical properties

Boiling point, initial boiling point, and boiling range	:	120°C (248°F)
Flash point	:	Closed cup: 29°C (84.2°F) [Pensky-Martens Closed Cup]
Evaporation rate	:	89 (butyl acetate = 1)
Flammability	:	Not available.
Lower and upper explosion limit/flammability limit	:	Lower: 0.7% Upper: 13.74%
Vapor pressure	:	1.5 kPa (10.9 mm Hg)
Relative vapor density	:	3.1 [Air = 1]
Relative density	:	1.19
Solubility	:	Not available.
Partition coefficient: n-octanol/water	:	Not applicable.
Auto-ignition temperature	:	Not available.
Decomposition temperature	:	Not available.
Viscosity	:	Kinematic (40°C (104°F)): <20.5 mm^2/s (<20.5 cSt)
Molecular weight	:	Not applicable.
Aerosol product		
Heat of combustion	:	10.977 kJ/g

Section 10. Stability and reactivity

Reactivity	:	No specific test data related to reactivity available for this product or its ingredients.
Chemical stability	:	The product is stable.
Possibility of hazardous reactions	:	Under normal conditions of storage and use, hazardous reactions will not occur.
Conditions to avoid	:	Avoid all possible sources of ignition (spark or flame). Do not pressurize, cut, weld, braze, solder, drill, grind or expose containers to heat or sources of ignition. Do not allow vapor to accumulate in low or confined areas.
Incompatible materials	:	Reactive or incompatible with the following materials: oxidizing materials
Hazardous decomposition products	:	Under normal conditions of storage and use, hazardous decomposition products should not be produced.

Section 11. Toxicological information

Information on toxicological effects

Acute toxicity

Section 11. Toxicological information

Product/ingredient name	Result	Species	Dose	Exposure
Xylene, mixed isomers	LC50 Inhalation Gas.	Rat	6700 ppm	4 hours
	LD50 Oral	Rat	4300 mg/kg	-
1-Methoxy-2-propanol	LD50 Dermal	Rabbit	13 g/kg	-
	LD50 Oral	Rat	6600 mg/kg	-
2-Butoxyethanol	LCLo Inhalation Vapor	Guinea pig	>3.1 mg/l	1 hours
	LD50 Dermal	Guinea pig	>2000 mg/kg	-
	LD50 Oral	Rat	1300 mg/kg	-
Ethylbenzene	LD50 Dermal	Rabbit	>5000 mg/kg	-
	LD50 Oral	Rat	3500 mg/kg	-
Light Aromatic Hydrocarbons	LD50 Oral	Rat	8400 mg/kg	-
trimethylbenzene	LD50 Oral	Rat	8970 mg/kg	-
1,2,4-Trimethylbenzene	LC50 Inhalation Vapor	Rat	18000 mg/m³	4 hours
	LD50 Oral	Rat	5 g/kg	-
1,3,5-Trimethylbenzene	LC50 Inhalation Vapor	Rat	24000 mg/m³	4 hours
	LD50 Oral	Rat	5000 mg/kg	-
Toluene	LC50 Inhalation Vapor	Rat	49 g/m³	4 hours
	LD50 Oral	Rat	636 mg/kg	-
Triethylene Tetramine	LD50 Dermal	Rabbit	805 mg/kg	-
	LD50 Oral	Rat	2500 mg/kg	-
Cumene	LC50 Inhalation Vapor	Rat	39000 mg/m³	4 hours
	LD50 Oral	Rat	1400 mg/kg	-
Formaldehyde (max.)	LC50 Inhalation Gas.	Rat	250 ppm	4 hours
	LD50 Dermal	Rabbit	270 mg/kg	-
	LD50 Oral	Rat	100 mg/kg	-

Irritation/Corrosion

Product/ingredient name	Result	Species	Score	Exposure	Observation
Xylene, mixed isomers	Eyes - Mild irritant	Rabbit	-	87 mg	-
	Eyes - Severe irritant	Rabbit	-	24 hours 5 mg	-
	Skin - Mild irritant	Rat	-	8 hours 60 uL	-
	Skin - Moderate irritant	Rabbit	-	24 hours 500 mg	-
	Skin - Moderate irritant	Rabbit	-	100 %	-
1-Methoxy-2-propanol	Eyes - Mild irritant	Rabbit	-	24 hours 500 mg	-
	Skin - Mild irritant	Rabbit	-	500 mg	-
2-Butoxyethanol	Eyes - Moderate irritant	Rabbit	-	24 hours 100 mg	-
	Eyes - Severe irritant	Rabbit	-	100 mg	-
	Skin - Mild irritant	Rabbit	-	500 mg	-
Ethylbenzene	Eyes - Severe irritant	Rabbit	-	500 mg	-
	Skin - Mild irritant	Rabbit	-	24 hours 15 mg	-
Light Aromatic Hydrocarbons	Eyes - Mild irritant	Rabbit	-	24 hours 100 uL	-
trimethylbenzene	Eyes - Mild irritant	Rabbit	-	24 hours 500 mg	-
	Skin - Moderate irritant	Rabbit	-	24 hours 500 mg	-
1,3,5-Trimethylbenzene	Eyes - Mild irritant	Rabbit	-	24 hours 500 mg	-
	Skin - Moderate irritant	Rabbit	-	24 hours 20 mg	-
Toluene	Eyes - Mild irritant	Rabbit	-	0.5 minutes 100 mg	-
	Eyes - Mild irritant	Rabbit	-	870 ug	-

Section 11. Toxicological information

	Eyes - Severe irritant	Rabbit	-	24 hours 2 mg	-
	Skin - Mild irritant	Pig	-	24 hours 250 uL	-
	Skin - Mild irritant	Rabbit	-	435 mg	-
	Skin - Moderate irritant	Rabbit	-	24 hours 20 mg	-
	Skin - Moderate irritant	Rabbit	-	500 mg	-
Triethylene Tetramine	Eyes - Moderate irritant	Rabbit	-	24 hours 20 mg	-
	Eyes - Severe irritant	Rabbit	-	49 mg	-
	Skin - Severe irritant	Rabbit	-	24 hours 5 mg	-
	Skin - Severe irritant	Rabbit	-	490 mg	-
Cumene	Eyes - Mild irritant	Rabbit	-	24 hours 500 mg	-
	Eyes - Mild irritant	Rabbit	-	86 mg	-
	Skin - Mild irritant	Rabbit	-	24 hours 10 mg	-
	Skin - Moderate irritant	Rabbit	-	24 hours 100 mg	-
Formaldehyde (max.)	Eyes - Mild irritant	Human	-	6 minutes 1 ppm	-
	Eyes - Severe irritant	Rabbit	-	24 hours 750 ug	-
	Eyes - Severe irritant	Rabbit	-	750 ug	-
	Skin - Mild irritant	Human	-	72 hours 150 ug I	-
	Skin - Severe irritant	Human	-	0.01 %	-
	Skin - Mild irritant	Rabbit	-	540 mg	-
	Skin - Moderate irritant	Rabbit	-	24 hours 50 mg	-
	Skin - Severe irritant	Rabbit	-	24 hours 2 mg	-
	Skin - Severe irritant	Rabbit	-	0.8 %	-

Sensitization

Not available.

Mutagenicity

Not available.

Carcinogenicity

Not available.

Classification

Product/ingredient name	OSHA	IARC	NTP
Xylene, mixed isomers	-	3	-
2-Butoxyethanol	-	3	-
Ethylbenzene	-	2B	-
Toluene	-	3	-
Cumene	-	2B	Reasonably anticipated to be a human carcinogen.
Formaldehyde (max.)	+	1	Known to be a human carcinogen.

Reproductive toxicity

Not available.

Teratogenicity

Not available.

Section 11. Toxicological information

Specific target organ toxicity (single exposure)

Name	Category	Route of exposure	Target organs
Xylene, mixed isomers	Category 3	-	Respiratory tract irritation
1-Methoxy-2-propanol	Category 3	-	Respiratory tract irritation
	Category 3		Narcotic effects
2-Butoxyethanol	Category 3	-	Respiratory tract irritation
	Category 3		Narcotic effects
Ethylbenzene	Category 3	-	Respiratory tract irritation
	Category 3		Narcotic effects
Light Aromatic Hydrocarbons	Category 3	-	Respiratory tract irritation
	Category 3		Narcotic effects
Heavy Aliphatic Solvent	Category 3	-	Respiratory tract irritation
	Category 3		Narcotic effects
1,2,4-Trimethylbenzene	Category 3	-	Respiratory tract irritation
1,3,5-Trimethylbenzene	Category 3	-	Respiratory tract irritation
Toluene	Category 3	-	Respiratory tract irritation
	Category 3		Narcotic effects
Cumene	Category 3	-	Respiratory tract irritation
	Category 3		Narcotic effects
1,2,3-Trimethylbenzene	Category 3	-	Respiratory tract irritation
Med. Aliphatic Hydrocarbon Solvent	Category 3	-	Respiratory tract irritation
	Category 3		Narcotic effects
Formaldehyde (max.)	Category 3	-	Respiratory tract irritation
	Category 3		Narcotic effects

Specific target organ toxicity (repeated exposure)

Name	Category	Route of exposure	Target organs
Xylene, mixed isomers	Category 2	-	-
1-Methoxy-2-propanol	Category 2	-	-
Kaolin	Category 1	inhalation	lungs
2-Butoxyethanol	Category 2	-	-
Ethylbenzene	Category 2	-	-
Light Aromatic Hydrocarbons	Category 2	-	-
Heavy Aliphatic Solvent	Category 1	-	central nervous system (CNS)
Toluene	Category 2	-	-
Cumene	Category 2	-	-
Med. Aliphatic Hydrocarbon Solvent	Category 1	-	-
Formaldehyde (max.)	Category 2	-	-

Aspiration hazard

Section 11. Toxicological information

Name	Result
Xylene, mixed isomers	ASPIRATION HAZARD - Category 1
Ethylbenzene	ASPIRATION HAZARD - Category 1
Light Aromatic Hydrocarbons	ASPIRATION HAZARD - Category 1
trimethylbenzene	ASPIRATION HAZARD - Category 1
Heavy Aliphatic Solvent	ASPIRATION HAZARD - Category 1
1,2,4-Trimethylbenzene	ASPIRATION HAZARD - Category 1
1,3,5-Trimethylbenzene	ASPIRATION HAZARD - Category 1
Toluene	ASPIRATION HAZARD - Category 1
Cumene	ASPIRATION HAZARD - Category 1
1,2,3-Trimethylbenzene	ASPIRATION HAZARD - Category 1
Med. Aliphatic Hydrocarbon Solvent	ASPIRATION HAZARD - Category 1

Information on the likely routes of exposure : Not available.

Potential acute health effects

Eye contact : Causes serious eye damage.

Inhalation : May cause respiratory irritation.

Skin contact : Causes skin irritation. May cause an allergic skin reaction.

Ingestion : May be fatal if swallowed and enters airways.

Symptoms related to the physical, chemical and toxicological characteristics

Eye contact : Adverse symptoms may include the following:
pain
watering
redness

Inhalation : Adverse symptoms may include the following:
respiratory tract irritation
coughing
reduced fetal weight
increase in fetal deaths
skeletal malformations

Skin contact : Adverse symptoms may include the following:
pain or irritation
redness
blistering may occur
reduced fetal weight
increase in fetal deaths
skeletal malformations

Ingestion : Adverse symptoms may include the following:
stomach pains
nausea or vomiting
reduced fetal weight
increase in fetal deaths
skeletal malformations

Delayed and immediate effects and also chronic effects from short and long term exposure

Short term exposure

Potential immediate effects : Not available.

Potential delayed effects : Not available.

Long term exposure

Section 11. Toxicological information

Potential immediate effects : Not available.

Potential delayed effects : Not available.

Potential chronic health effects

Not available.

General : Causes damage to organs through prolonged or repeated exposure. Once sensitized, a severe allergic reaction may occur when subsequently exposed to very low levels.

Carcinogenicity : May cause cancer. Risk of cancer depends on duration and level of exposure.

Mutagenicity : No known significant effects or critical hazards.

Teratogenicity : Suspected of damaging the unborn child.

Developmental effects : No known significant effects or critical hazards.

Fertility effects : No known significant effects or critical hazards.

Numerical measures of toxicity

Acute toxicity estimates

Route	ATE value
Oral	6995.99 mg/kg
Dermal	5164.44 mg/kg
Inhalation (gases)	39623.04 ppm
Inhalation (vapors)	71.87 mg/l

Section 12. Ecological information

Toxicity

Product/ingredient name	Result	Species	Exposure
Xylene, mixed isomers	Acute LC50 8500 µg/l Marine water	Crustaceans - Palaemonetes pugio	48 hours
	Acute LC50 13400 µg/l Fresh water	Fish - Pimephales promelas	96 hours
2-Butoxyethanol	Acute EC50 >1000 mg/l Fresh water	Daphnia - Daphnia magna	48 hours
	Acute LC50 800000 µg/l Marine water	Crustaceans - Crangon crangon	48 hours
	Acute LC50 1250000 µg/l Marine water	Fish - Menidia beryllina	96 hours
Ethylbenzene	Acute EC50 4900 µg/l Marine water	Algae - Skeletonema costatum	72 hours
	Acute EC50 7700 µg/l Marine water	Algae - Skeletonema costatum	96 hours
	Acute EC50 6.53 mg/l Marine water	Crustaceans - Artemia sp. - Nauplii	48 hours
	Acute EC50 2.93 mg/l Fresh water	Daphnia - Daphnia magna - Neonate	48 hours
	Acute LC50 4200 µg/l Fresh water	Fish - Oncorhynchus mykiss	96 hours
trimethylbenzene	Acute LC50 5600 µg/l Marine water	Crustaceans - Palaemonetes pugio	48 hours
1,2,4-Trimethylbenzene	Acute LC50 4910 µg/l Marine water	Crustaceans - Elasmopus pectenicrus - Adult	48 hours
	Acute LC50 7720 µg/l Fresh water	Fish - Pimephales promelas	96 hours
1,3,5-Trimethylbenzene	Acute LC50 13000 µg/l Marine water	Crustaceans - Cancer magister - Zoea	48 hours
	Acute LC50 12520 µg/l Fresh water	Fish - Carassius auratus	96 hours
	Chronic NOEC 400 µg/l Fresh water	Daphnia - Daphnia magna	21 days
Toluene	Acute EC50 >433 ppm Marine water	Algae - Skeletonema costatum	96 hours
	Acute EC50 11600 µg/l Fresh water	Crustaceans - Gammarus pseudolimnaeus - Adult	48 hours
	Acute EC50 6000 µg/l Fresh water	Daphnia - Daphnia magna -	48 hours

Section 12. Ecological information

		Juvenile (Fledgling, Hatchling, Weanling)	
	Acute LC50 5500 µg/l Fresh water	Fish - Oncorhynchus kisutch - Fry	96 hours
	Chronic NOEC 1000 µg/l Fresh water	Daphnia - Daphnia magna	21 days
Triethylene Tetramine	Acute LC50 33900 µg/l Fresh water	Daphnia - Daphnia magna	48 hours
Cumene	Acute EC50 7.4 mg/l Marine water	Crustaceans - Artemia sp. - Nauplii	48 hours
	Acute EC50 10.6 mg/l Fresh water	Daphnia - Daphnia magna - Neonate	48 hours
	Acute LC50 2700 µg/l Fresh water	Fish - Oncorhynchus mykiss	96 hours
Formaldehyde (max.)	Acute EC50 3.48 mg/l Fresh water	Algae - Desmodesmus subspicatus	72 hours
	Acute EC50 0.442 mg/l Marine water	Algae - Ulva pertusa	96 hours
	Acute EC50 12.98 mg/l Fresh water	Crustaceans - Ceriodaphnia dubia - Neonate	48 hours
	Acute EC50 3.26 mg/l Fresh water	Daphnia - Daphnia magna - Embryo	48 hours
	Acute LC50 1.41 ppm Fresh water	Fish - Oncorhynchus mykiss	96 hours
	Chronic NOEC 0.005 mg/l Marine water	Algae - Isochrysis galbana - Exponential growth phase	96 hours
	Chronic NOEC 3000 ppm Fresh water	Crustaceans - Astacus astacus - Egg	21 days
	Chronic NOEC 1.56 mg/l Fresh water	Fish - Oreochromis niloticus - Fingerling	12 weeks

Persistence and degradability

Product/ingredient name	Aquatic half-life	Photolysis	Biodegradability
Xylene, mixed isomers	-	-	Readily
2-Butoxyethanol	-	-	Readily
Ethylbenzene	-	-	Readily
Light Aromatic Hydrocarbons	-	-	Readily
Toluene	-	-	Readily

Bioaccumulative potential

Product/ingredient name	$LogP_{ow}$	BCF	Potential
Xylene, mixed isomers	-	8.1 to 25.9	low
Light Aromatic Hydrocarbons	-	10 to 2500	high
Heavy Aliphatic Solvent	-	10 to 2500	high
1,2,4-Trimethylbenzene	-	243	low
1,3,5-Trimethylbenzene	-	161	low
Toluene	-	90	low
Cumene	-	35.48	low
1,2,3-Trimethylbenzene	-	194.98	low

Mobility in soil

Soil/water partition coefficient (K_{OC}) : Not available.

Other adverse effects : No known significant effects or critical hazards.

Section 13. Disposal considerations

Disposal methods : The generation of waste should be avoided or minimized wherever possible. Disposal of this product, solutions and any by-products should at all times comply with the requirements of environmental protection and waste disposal legislation and any regional local authority requirements. Dispose of surplus and non-recyclable products via a licensed waste disposal contractor. Waste should not be disposed of untreated to the sewer unless fully compliant with the requirements of all authorities with jurisdiction. Waste packaging should be recycled. Incineration or landfill should only be considered when recycling is not feasible. This material and its container must be disposed of in a safe way. Care should be taken when handling emptied containers that have not been cleaned or rinsed out. Empty containers or liners may retain some product residues. Vapor from product residues may create a highly flammable or explosive atmosphere inside the container. Do not cut, weld or grind used containers unless they have been cleaned thoroughly internally. Avoid dispersal of spilled material and runoff and contact with soil, waterways, drains and sewers.

Section 14. Transport information

	DOT Classification	TDG Classification	Mexico Classification	IATA	IMDG
UN number	UN1263	UN1263	UN1263	UN1263	UN1263
UN proper shipping name	PAINT	PAINT	PAINT	PAINT	PAINT. Marine pollutant (Polyamidoamine, Light Aromatic Hydrocarbons)
Transport hazard class(es)	3	3	3	3	3
Packing group	III	III	III	III	III
Environmental hazards	No.	No.	No.	Yes. The environmentally hazardous substance mark is not required.	Yes.
Additional information	- **ERG No.** 128	Product classified as per the following sections of the Transportation of Dangerous Goods Regulations: 2.18-2.19 (Class 3). **ERG No.** 128	- **ERG No.** 128	The environmentally hazardous substance mark may appear if required by other transportation regulations.	The marine pollutant mark is not required when transported in sizes of ≤5 L or ≤5 kg. **Emergency schedules** F-E, S-E

Section 14. Transport information

Special precautions for user : Multi-modal shipping descriptions are provided for informational purposes and do not consider container sizes. The presence of a shipping description for a particular mode of transport (sea, air, etc.), does not indicate that the product is packaged suitably for that mode of transport. All packaging must be reviewed for suitability prior to shipment, and compliance with the applicable regulations is the sole responsibility of the person offering the product for transport. People loading and unloading dangerous goods must be trained on all of the risks deriving from the substances and on all actions in case of emergency situations.

Transport in bulk according to IMO instruments : Not available.

Proper shipping name : Not available.

Section 15. Regulatory information

SARA 313

SARA 313 (40 CFR 372.45) supplier notification can be found on the Environmental Data Sheet.

California Prop. 65

WARNING: This product contains chemicals known to the State of California to cause cancer and birth defects or other reproductive harm.

International regulations

International lists : **Australia inventory (AIIC)**: Not determined.
China inventory (IECSC): Not determined.
Japan inventory (CSCL): Not determined.
Japan inventory (ISHL): Not determined.
Korea inventory (KECI): Not determined.
New Zealand Inventory of Chemicals (NZIoC): Not determined.
Philippines inventory (PICCS): Not determined.
Taiwan Chemical Substances Inventory (TCSI): Not determined.
Thailand inventory: Not determined.
Turkey inventory: Not determined.
Vietnam inventory: Not determined.

Section 16. Other information

Hazardous Material Information System (U.S.A.)

Health	*	3
Flammability		3
Physical hazards		0

The customer is responsible for determining the PPE code for this material. For more information on HMIS® Personal Protective Equipment (PPE) codes, consult the HMIS® Implementation Manual.

Caution: HMIS® ratings are based on a 0-4 rating scale, with 0 representing minimal hazards or risks, and 4 representing significant hazards or risks. Although HMIS® ratings and the associated label are not required on SDSs or products leaving a facility under 29 CFR 1910.1200, the preparer may choose to provide them. HMIS® ratings are to be used with a fully implemented HMIS® program. HMIS® is a registered trademark and service mark of the American Coatings Association, Inc.

Procedure used to derive the classification

Section 16. Other information

Classification	Justification
FLAMMABLE LIQUIDS - Category 3	On basis of test data
SKIN CORROSION/IRRITATION - Category 2	Calculation method
SERIOUS EYE DAMAGE/ EYE IRRITATION - Category 1	Calculation method
SKIN SENSITIZATION - Category 1	Calculation method
CARCINOGENICITY - Category 1A	Calculation method
TOXIC TO REPRODUCTION - Category 2	Calculation method
SPECIFIC TARGET ORGAN TOXICITY (SINGLE EXPOSURE) (Respiratory tract irritation) - Category 3	Calculation method
SPECIFIC TARGET ORGAN TOXICITY (REPEATED EXPOSURE) - Category 1	Calculation method
ASPIRATION HAZARD - Category 1	Calculation method

History

Date of printing : 10/3/2021

Date of issue/Date of revision : 10/3/2021

Date of previous issue : 8/9/2021

Version : 17

Key to abbreviations : ATE = Acute Toxicity Estimate
BCF = Bioconcentration Factor
GHS = Globally Harmonized System of Classification and Labelling of Chemicals
IATA = International Air Transport Association
IBC = Intermediate Bulk Container
IMDG = International Maritime Dangerous Goods
LogPow = logarithm of the octanol/water partition coefficient
MARPOL = International Convention for the Prevention of Pollution From Ships, 1973 as modified by the Protocol of 1978. ("Marpol" = marine pollution)
N/A = Not available
SGG = Segregation Group
UN = United Nations

Indicates information that has changed from previously issued version.

Notice to reader

It is recommended that each customer or recipient of this Safety Data Sheet (SDS) study it carefully and consult resources, as necessary or appropriate, to become aware of and understand the data contained in this SDS and any hazards associated with the product. This information is provided in good faith and believed to be accurate as of the effective date herein. However, no warranty, express or implied, is given. The information presented here applies only to the product as shipped. The addition of any material can change the composition, hazards and risks of the product. Products shall not be repackaged, modified, or tinted except as specifically instructed by the manufacturer, including but not limited to the incorporation of products not specified by the manufacturer, or the use or addition of products in proportions not specified by the manufacturer. Regulatory requirements are subject to change and may differ between various locations and jurisdictions. The customer/buyer/user is responsible to ensure that his activities comply with all country, federal, state, provincial or local laws. The conditions for use of the product are not under the control of the manufacturer; the customer/buyer/user is responsible to determine the conditions necessary for the safe use of this product. The customer/buyer/user should not use the product for any purpose other than the purpose shown in the applicable section of this SDS without first referring to the supplier and obtaining written handling instructions. Due to the proliferation of sources for information such as manufacturer-specific SDS, the manufacturer cannot be responsible for SDSs obtained from any other source.

BALCAN MP8000 Lamp Recycler

INSTRUCTION MANUAL

BALCAN
ENGINEERING LIMITED

Banovallum Court
Boston Road Industrial Estate
Horncastle
LINCS UK LN9 6JR
Tel: +44 (0) 1507 528500
Fax: +44 (0) 1507 528528
E-mail: info@balcan.co.uk
Web Site: www.cfl-lamprecycling.com

January 2012

Issue	Date	Mod By	Modifications

BALCAN Eng Ltd
HORNCASTLE
LINCOLNSHIRE LN9 6JR

ALL UNTOLERANCED DIMENSIONS TO ISO 2768-m
ALL MATERIALS S/STEEL UNLESS OTHERWISE STATED
ALL DIMENSIONS IN MM UNLESS OTHERWISE STATED

TITLE. TYPICAL PLANT LAYOUT
MP 8000
DRG No.
3rd ANGLE
SCALE.
DATE. 24.09.12
ISSUE. A
SHEETS. 1 OF 1
DRAWN BY. RJGM
CHECKED BY.

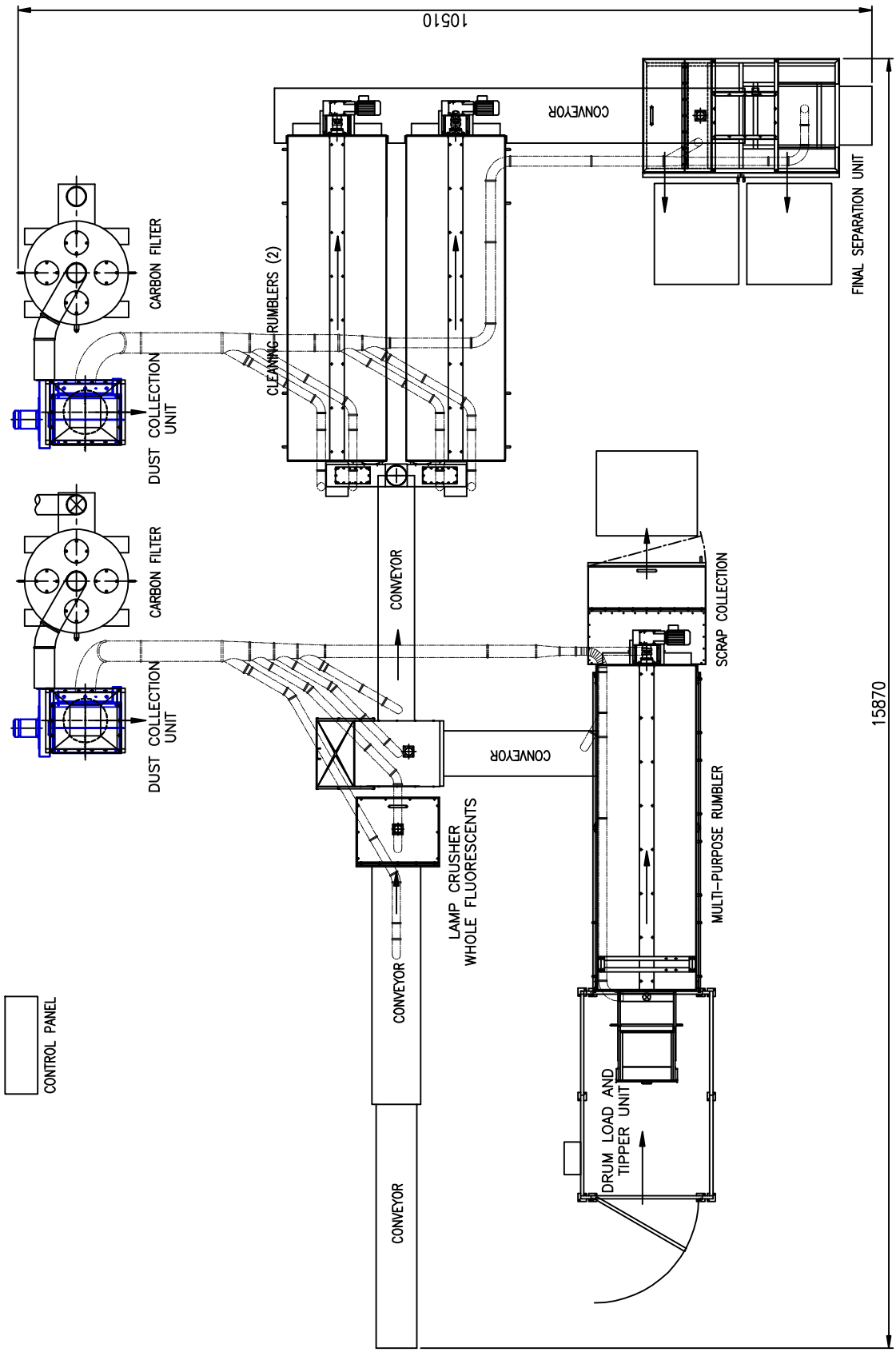

REMOVE ALL SHARP EDGES AND CORNERS

TOTAL FLOOR AREA APPROXIMATELY 16m x 10.5m
(DIMENSIONS ARE APPROXIMATE PENDING FINAL DESIGN)
NOTE – DIMENSIONS STATED ARE THE DIMENSIONS OF THE PLANT WHEN INSTALLED. SUFFICIENT SPACED MUST BE ALLOWED AROUND THE PLANT TO ALLOW ACCESS FOR LOADING AND UNLOADING AND FOR MAINTENENCE.

MP 8000

CONTENTS

SECTION 1: INTRODUCTION

SECTION 2: PLANT PROCESS DESCRIPTION

SECTION 3: SAFETY FEATURES

SECTION 4: AIR AND ELECTRICITY REQUIREMENTS

SECTION 5: GENERAL SAFETY AND PRELIMINARY CHECKS

SECTION 6: OPERATING INSTRUCTIONS

SECTION 7: MAINTENANCE, CLEANING AND REPAIR

SECTION 8: TROUBLESHOOTING

SECTION 9: CONTROL OF MERCURY CONTAMINATION

SECTION 10: DRAWINGS AND PARTS LISTS

SECTION 11: LIST OF RECOMMENDED SPARES

SECTION 12: CE AND OTHER RELAVENT DOCUMENTATION

SECTION 13: DISMANTLING

SECTION 14: SUPPLIER DOCUMENTATION FOR MAINTENANCE

SECTION 1

INTRODUCTION

The Balcan Lamp Recycling Plant is designed to recycle old lamps by crushing the glass and then separating the glass from other materials leaving the glass in small clean pieces for further recycling.

In the UK and Europe lamps such as fluorescent tubes are required by law (WEEE regulations) to be disposed of as hazardous waste as they contain highly toxic substances such as phosphor powder containing mercury.

All glass lamps can be processed through the plant whether whole or pre-crushed for separation into their specific materials.

Plastic sleeved fluorescent lamps cannot be processed through the plant without the use of the Balcan cutting system to remove the sleeving first. (Not included in this plant).

Low pressure sodium (SOX) and other lamps which require to be neutralised with water because of their fire and explosion risk must be broken with copious quantities of water before being dried and processed. DO NOT PROCESS WET MATERIALS THROUGH THE PLANT.

High pressure sodium lamps (SON) contain mercury and the debris from these must be treated as hazardous waste. GREAT CARE MUST BE TAKEN WHEN HANDLING THESE AS THEY CAN EXPLODE AND MAY CAUSE INJURY.

SECTION 2

PLANT PROCESS DESCRIPTION

Whole (excluding fluorescent tubes over 600mm long) or pre-crushed lamps can be loaded into the drum loader and tip bin normally in barrels. The barrel is emptied into the separation rumbler where the lamps are tumbled to break them up.

The first section of the separation rumbler is ‘solid’ and tumbles the lamps to break them up and separate the glass from the non glass materials. The second section of the separation rumbler is perforated and allows the glass material to fall through the rumbling drum whilst the non glass material is ejected and deposited into the debris skip for plastic and metallic components.

The glass, along with any remaining non glass materials, will be fed, by a series of feeders and conveyors, into the final cleaning rumbler. Here, the glass is further broken into small pieces and cleaned. As the materials exit the final cleaning rumbler any non glass materials are separated either by magnet, for ferrous parts, or a vibrator for non ferrous parts. The small cleaned glass pieces fall through the vibrator grid into a container to be removed for further recycling.

Whole fluorescent tubes are loaded onto the flatbed conveyor and they then pass through the crusher. From the lamp crusher the broken parts fall directly onto a conveyor and are processed as above.

SECTION 3

SAFETY FEATURES

The operator is protected by electrically interlocked safety fencing around the bin loading area. If the guard is opened during operation of the Bin Tip unit the Tip Unit will immediately stop. The rest of the plant will continue to operate.

An emergency stop button (coloured red) is situated in the front centre of the Main Control Panel. If this is pressed the whole plant will stop immediately. Additional emergency stop buttons are fitted at different points throughout the plant.

Note – When the emergency stop button has been depressed the Dust Filter Units will also stop operating. This may lead to short term exposure to vapours. Therefore the area should be ventilated as soon as possible.

Note – The emergency stop button should only be used to shut down the whole plant in case of emergency. It must not be used as a general stop button.

All powered moving parts of the plant are guarded. Guards must not be removed unless the plant has been isolated. Never run the plant unless all guards are in place and securely fitted.

All sections of the plant are fitted with isolators to their motors which should ONLY be used when performing any maintenance on the plant. They should not be used to stop the plant.

When starting the system a siren will sound and light flash to alert people in the area.

SECTION 4

AIR AND ELECTRIC REQUIREMENTS

AIR - A supply of clean, dry filtered compressed air is required for operation of the Dust Filter Units – Airmaster (brand)

Total requirement is 7.5Nm3/h

ELECTRICITY -Total power requirements are 400 V 3 ph 60 Amp

The control panel must be permanently wired with a suitable branch circuit breaker of not more than 63 amps.

See separate schedule for motor specification.

SECTION 5

GENERAL SAFETY AND PRILIMINARY CHECKS

This section has been written for your general safety and to avoid damage to the equipment.

Ignoring this information could result in personal injury and / or plant damage.

1. Read and be familiar with all sections of this manual before attempting to operate the plant.
2. Do not use the plant for any other purpose than its stated purpose.
3. Additional safety notes appear in this manual where appropriate.
4. Ensure all tools and cleaning equipment are removed from the plant and work area before starting the plant.
5. Ensure all fixed and removable guards are in place and securely fixed before starting the plant.
6. Do not open electrical cabinets unless the plant is isolated.
7. Never leave the plant unattended whilst running.
8. Ensure the plant is at rest and isolated before cleaning.
9. Ensure all loose apparel is retained. i.e. ties, loose clothing, hair, etc.
10. Adhere to internal safety and hygiene practices imposed by your organisation.
11. Operation of the plant must be carried out by trained personnel only.
12. Do not operate the plant with the extraction system defective or turned off.
13. Do not carry out maintenance work or repair when the power is switched on.
14. Do not operate the plant or carry out maintenance or repair work without wearing the correct personal protective equipment.
15. Do not enter the plant guarding when the power is switched on.
16. Do not over fill the Tip Bin or Bag Hopper.
17. The plant has been designed so that it can be operated without the need for operators, employees or visitors to wear breathing apparatus. However, it is essential for the plant to be operated with proper ventilation in operation to allow a regular change of atmosphere.

SECTION 6

OPERATING INSTRUCTIONS

BEFORE OPERATING THE PLANT READ AND BE FAMILIAR WITH THE SAFETY AND PRILIMINARY CHECKS NOTE IN SECTION 5

6.1.0 OPERATING THE RECYCLING PLANT

6.1.1 Before switching on the recycling plant, check that the End Cap and Glass containers are not full. Also check the drawers beneath each of the conveyors. When they become full during operation the plant must be stopped so that they can be emptied or replaced. Failure to do this may result in damage to the conveyor belts.

6.1.2 Check that the Air Filter Unit Dust Containers are not full. If they are full they must be replaced before switching on the Recycle Plant. Refer to Section 7 to replace the Dust Containers.

6.1.3 On the Main Control Panel, turn on the master power switch. Press the green buttons on Dust Filter Unit 1 and Dust Filter Unit 2. The green lights will illuminate. When pressing the auto start button the air extractors will start first.

NOTE –BOTH DUST FILTER UNITS MUST BE RUNNING AT ALL TIMES WHEN THE RECYCLING PLANT IS SWITCHED ON. WHEN TRYING TO START INDIVIDUAL COMPONENTS MANUALLY FOR SERVICING THESE WILL NOT RUN IF THE FILTERS ARE NOT RUNNING.

6.1.4 On the Main Control Panel, press the green Auto Start button. The green light will illuminate and the plant will go through an automatic start up sequence. If this does not happen, press the Reset button and then press the green Auto Start button again.

6.1.5 Check that all Conveyor Belts are moving and that the rumbling drums are rotating. Check that the Rotating Magnet at the end of the Cleaning Rumblers is rotating and that the Vibrator is operating.

6.1.6 **For small and pre crushed lamps:-** Place a drum containing pre-crushed or small whole lamps into the Tip Bin. Or place pre-crushed or small whole lamps directly into the Tip Bin. If emptying sacks into the Tip Bin ensure that the open neck of the sack is directed into the Tip Bin at all times. This will ensure that dust is extracted by the extraction system. Empty sacks should be put aside for later disposal.

CAUTION – PROTECTIVE CLOTHING / EQUIPMENT MUST BE WORN AT ALL TIMES WHEN HANDLING SACKS OF BROKEN GLASS. i.e. GLOVES, SAFETY GLASSES, SUITABLE OVERALLS, SAFETY SHOES ETC.

6.1.7 When the Tip Bin is ready, close the Guard Door. On the side of the Main Control Panel under 'Hydraulic Drum Loader' set the auto/manual switch to auto or manual. In auto mode press the 'Auto Start' button. The Tip Bin will go through an automatic tipping sequence to load the broken glass / lamps into the Main Separation Rumbler. This is an approximately 5 minute sequence. Do not open the guard door until the Tip Bin has returned to its start position. Doing so will stop the Tip Bin sequence. In the manual mode, press the 'Manual Raise' button to load the broken glass / lamps into the Main Separation Rumbler. Keep the button depressed to complete the loading cycle. If the button is not kept depressed the Tip Bin movement will stop. To return the Tip Bin to its start position, press, and keep depressed, the 'Manual Lower' button.

6.1.8 Monitor the flow of glass and materials into their respective containers and ensure that they are being deposited correctly. Stop the plant to empty or replace the containers as necessary.

6.2.0 SHUTTING DOWN THE PLANT

6.2.1 When no further broken glass /lamps are to be processed the plant can be shut down.

6.2.2 It is recommended to allow time for the last load to complete its cycle before shutting down the plant. This will take approximately 10 minutes depending upon the materials being processed.

6.2.3 On the Main Control Panel press the red 'Auto Stop' button. This will initiate an automatic shut down sequence. The plant will not stop immediately.

6.2.4 Once the plant has shut down the Dust Filter Units will continue to operate for a further approximately 3 minutes. This is to ensure that as much dust as possible has been removed from the plant.

6.2.5 Once the Dust Filter Units have shut down the Master Power Switch can be turned to the 'off' position. DO NOT TURN THE MASTER POWER SWITCH TO THE OFF POSITION UNTIL THE DUST FILTER UNITS HAVE TURNED THEMSELVES OFF.

6.3.0 USING THE GLASS HOPPER

6.3.1 Broken glass can be emptied into the Hopper without being processed through the Main Separation Rumbler. Glass from the multi-purpose unit will discharge into this unit when running.

6.3.3 Do not overfill the Bag Hopper to avoid jamming at the bottom of the hopper. The hopper is only to handle small pieces of broken or pre crushed lamps. Putting whole lamps or components other than those from linear fluorescent tubes may cause damage to the belt below.

6.4.0 USING THE LAMP CRUSHER – **Fluorescent tubes only**

6.4.1 Whole fluorescent tubes are processed through the belt fed Lamp Crusher

6.4.2 Switch on the Lamp Crusher.

6.4.3 Load whole fluorescent tubes, 5 or 6 at a time, manually onto the belt.

6.4.4 The first stage belt will transport the lamps on to a second belt which is covered. At the end of this belt is a crushing unit. The crushed debris discharges onto the main conveyor and is transported up and through the cleaning rumblers.

IMPORTANT

DO NOT PUT ANYTHING ON THE BELT OTHER THAN STRAIGHT FLUORESCENT TUBES. TUBES MUST BE FREE OF CARDBOARD SLEEVING AND TAPE. TUBES WILL BREAK ALONG THE BELT DURING CRUSHING BUT CRUSHED LAMPS MUST NOT BE EMPTIED ON TO THE BELTS. DAMAGE TO THE BELTS MAY OCCUR OTHERWISE.

SECTION 7

MAINTENANCE, CLEANING AND REPAIR

7.1.0 EMPTYING THE DUST FILTER UNIT DUST CONTAINERS – these are fitted with sensors which should flash when nearly full.

7.1.1 When the barrels under the Dust Filter Units become full they have to be changed.

7.1.2 Ensure the Dust Filter Unit is switched off.

7.1.3 Position a pallet truck, or similar, under the drum.

7.1.4 Raise the lever across the front of the drum to its fully up position. This will lower the drum onto the pallet truck.

7.1.5 Pull the pallet truck, with the filled drum, from under the Dust Filter Unit.

7.1.6 Place a sealed lid on the drum immediately to avoid contamination. Remove the lifting band from the drum and place the drum aside for disposal.

7.1.7 Place an empty drum on the pallet truck and fit the lifting band. Push under the Dust Filter Unit to locate the lifting mechanism.

7.1.8 Push the lifting lever fully down to lift the drum to its position. Ensure that the drum is located correctly on its seating under the Dust Filter Unit.

NOTE – ALWAYS WEAR CORRECT PERSONAL PROTECTIVE EQUIPMENT WHEN CARRYING OUT THIS OPERATION INCLUDING BREATHING APPARATUS.

A FULL DRUM OF EXPENDED DUST WILL WEIGH APPROXIMATELY 200Kg. ALWAYS USE SUITABLE LIFTING EQUIPMENT WHEN HANDLING.

7.2.0 CHANGING THE DUST FILTER UNIT FILTERS

7.2.1 Refer to the DANTHERM FILTRATION manual supplied with this plant for instructions for changing the filters.

The model number supplied with this plant is MJC Mini 26/66/22

7.6.2 Checks should be made to the Dust Filter Units in accordance with DANTHERM FILTRATION manual supplied with this plant.

7.7.5 With the re-cycle process in operation, use the MVI to check the mercury vapour level at the outlet of the Activated Carbon Filter unit. If this gives a reading greater than 10 micro grams per cubic metre, repeat the check on a monthly basis. When the level reaches 15 micro grams per cubic metre the Activated Carbon must be replaced.

7.8.0 CLEANING

7.8.1 It is important to keep the plant and general working area clean and tidy.

7.8.2 Never sweep the dust from floors or other surfaces because the mercury bearing dust may become airborne and contaminate the working atmosphere. Always use a vacuum cleaner to remove dust.

7.8.3 Pick up larger pieces of debris the vacuum cleaner will not. Care should be taken when picking up glass and metal debris as they may have sharp edges.

7.8.4 Never use a compressed air line in the area around the plant. Mercury contaminated dust will be become airborne.

7.8.5 Never use a water power wash on the plant as water could damage the equipment.

7.9.0 REPAIR

7.9.1 Always isolate the plant before commencing any repair work.

7.9.2 Always wear the correct personal protective equipment when working on the plant.

7.9.3 Never operate the plant without guards in place and securely fixed.

7.3.0 CLEANING SPILLAGE OF POWDER AND / OR GLASS FRAGMENTS

7.3.1 Pick up any large fragments of glass or other materials and place in the relevant container.

7.3.1 Use a vacuum cleaner to clean affected areas of dust. It is not recommended to use a brush for the removal of dust residue to avoid contamination becoming airborne. See Section 9.

ROUTINE MAINTENANCE

7.4.0 DAILY MAINTENANCE

7.4.1 At the end of each shift ensure all empty bags / sacks are stored in a defined storage area for disposal.

7.4.2 Clean around plant area to remove dust and debris residue.

7.4.3 Check condition of Conveyor Belts for wear.

7.5.0 WEEKLY MAINTENANCE

7.5.1 Using grease gun, lubricate the feeders and crushers at grease nipples if necessary.

7.6.0 MONTHLY MAINTENANCE

7.6.1 With air extractors running to keep negative pressure remove side panel of rumbler. Check for build up of powder and clean out if necessary.

7.7.0 SPECIAL CHECKS

7.7.1 During the Recycling Plant manufacture and development, mercury vapour emissions were checked and found to be well below the prescribed limits. To verify that there has been no degradation of the process the following checks should be carried out.

7.7.2 Turn on both Dust Filter Units. Load the Tip Bin with glass debris. Using a portable Mercury Vapour Indicator, check that the mercury vapour levels in the area around the Tip Bin do not exceed the prescribed levels.

7.7.3 Start the re-cycle process and, using a MVI, repeat the checks above.

7.7.4 Check all areas around the plant for any build up of mercury vapours.

SECTION 8

TROUBLESHOOTING

8.1.0 IF THE PLANT DOES NOT OPERATE

8.1.1 Check the main supply to the Control Panel is switched on.

8.1.2 Check the Red Emergency Stop button is in the ‘out’ position.

8.1.3 Check individual isolator switches for the motors etc are switched on.

8.1.4 Check safety switches are in their correct position.

8.1.5 Press the ‘Reset’ button if the plant has not previously shut down in the correct sequence.

8.1.6 Check power supply to the Control Panel.

8.1.7 The motors are linked to a thermal overload. Under certain conditions they may not re-start until they have cooled and the thermal overload has re-set.

8.2.0 POSSIBLE PROBLEMS AND THEIR SOLUTIONS

NOTE – THE FOLLOWING MUST ONLY BE CARRIED OUT BY QUALIFIED PERSONELL.

8.2.1 TIP UNIT DOES NOT OPERATE. – Check tip unit is fully down and safety switch closed before loading. Check guard door is closed and safety switch closed before operating. Check hydraulic pump is operating.

8.2.2 FEEDER JAMMED. – Stop and isolate plant. Remove covers from feeder and remove any materials from the feeder that are causing the jam. Replace the covers and re-start the plant. Note –The re-set button may need to be pressed before the plant will re-start.

8.2.3 CONVEYOR JAM. – Stop and isolate the plant. Each conveyor is fitted with a proximity switch which will shut the plant down and prevent damage to the conveyor if the conveyor stops for any reason. Initially check this sensor is in place as it relies on sensing movement at a short distance. If all seems to be alright remove covers from the conveyor and remove any materials from the conveyor that are causing the jam. Clean the conveyor belt and make sure there is no debris caught anywhere, paying particular attention to the areas around the rollers. Replace the covers and start the conveyor. If the conveyor is not running smoothly repeat the process.

8.2.4 LOSS OF HYDRAULIC PRESSURE. – Check the hydraulic pump is running. Check hydraulic hoses and cylinders for leaks. Replace seals if leaking

8.2.5 Foreign materials such as tape, cardboard, cloth etc may cause blockages if allowed to enter the plant.

The Control Panel

The control panel has been designed to provide semi automatic operation of the system. Lights and buttons allow the plant to be operated with ease and a simple start-up and shut down sequence is programmed into the system.

A red light shows when a component is not running and a green light shows when it is. If there is a problem with part of the plant then all components behind the troubled section will cease operation to allow the system to clear itself and the light on the control panel relating to that section will flash red.

The control panel is fitted with potentiometer dials to allow speeds to be adjusted during the commissioning of the system. These are fitted behind a locking door and should not need to be adjusted.

The control panel is fitted with an emergency stop switch which is only to be used in emergencies. Using it to shut down the plant on a regular basis without allowing the system to run through its shutdown sequence can cause damage to electronic components within the panel.

SECTION 9

CONTROL OF MERCURY CONTAMINATION

9.1.0 Checks for the presence of mercury vapour should be made as described in Section 7 Paragraph 7.7.0

9.1.1. The dust collected from the Dust Filter Units contains mercury and must be disposed of as toxic waste according to local regulations.

9.1.2 The correct personal protective equipment, including breathing apparatus, must always be used by operators when changing the Dust Filter Unit dust collector or filters.

9.1.3 Use a vacuum cleaner to clean affected areas of dust. It is not recommended to use a brush for the removal of dust residue to avoid contamination becoming airborne.

SECTION 10

DRAWINGS AND PARTS LISTS

NOTE- Fitting spare parts to the plant other than those sourced from Balcan Engineering Ltd may invalidate the warranty.

SECTION 11

LIST OF RECOMMENDED SPARES ELECTRICAL

Balcan lamp recyclers have proven to be very reliable and we do not have a recommended list of spare electrical parts. For maximum economies to be achieved all motors are supplied to local voltage and should be available from local suppliers if necessary.

Each motor is fitted with a plate and the information can be taken from it. It is important to make certain the frame size of the motor will fit the gearbox.

A list of electrical components is supplied in the cabinet.

Where components are not available locally Balcan are able to supply spares for replacement in the event of a failure.

SECTION 11

LIST OF RECOMMENDED SPARES MECHANICAL

DESCRIPTION	PART No	MANUFACTURER	QTY
Dust Filter Unit Filter	26/66/22	Dantherm	8
Rumbler Bearing - Outfeed			2
Feeding Unit Bearing	F2BSC25M		2
Door Gas Strut			2

Set of Conveyor Belts

1. Crushing unit conveyor
2. Main Glass feed conveyor
3. Multi purpose to hopper belt
4. Outlet to vibrator

Conveyor belts are specific to each conveyor.

Availability to Balcan is approx 10 working days from receipt of payment and then shipping time.

SECTION 12

CE AND OTHER RELAVENT DOCUMENTATION

SECTION 13

DISMANTLING

13.1.0 At the end of its working life the plant may be dismantled for disposal.

13.1.1 For disposal purposes the following materials form the main fabric of the plant.

Main Bodies	Mild Steel Painted
Main Bodies	Stainless Steel
Conveyors	Aluminium
Conveyor Belts	Polyester / Polyurethane / PVC

Some parts of the plant, particularly the ducting, may contain contaminated dust and should be cleaned appropriately before disposal.

13.2.0 For dismantling of Dust Filter Units see separate manual.

Balcan MP8000 Visual Daily Checks & Maintenance Instructions.

All Balcan Lamp Recycling Systems are designed with minimal maintenance and servicing requirements.

Usually daily checks are enough to overcome heavy maintenance of the equipment however, it is necessary each month to make more thorough checks.

The system checks can be divided into two main areas:

1. Check the Conveyors
2. Check the drawers
3. Check other areas.

1. There is a drawer at each end of the bottom flat of each of the conveyors. These should be removed at the end of each shift and emptied.

Drawers at base of conveyor from Universal /Multi-purpose rumbler

Drawers at the base of main conveyor to cleaning rumbler (from linear crusher)

Drawer in between the two flatbed conveyors

Flat plate drawers under both flatbed conveyors should be removed every week

End panel of flatbed conveyor should be removed monthly and any debris cleaned from under the belts.

2. Each rumbler is fitted with drawers. The Universal Rumbler has drawers either side behind the drum tipper unit.
   The cleaning rumbler has drawers at each corner.
   Check the drawers at the end of each shift will help reduce any build up of fine glass/powder or debris which may over time reach the nylon rollers which the drums rotate on and cause premature wear.
   Each drawer is fitted with a small bolt which requires a 10mm spanner to remove it before the drawer can slide out.

3. Other areas to check and frequency.

a. Vibrating flat bed grid
Daily – Check no end caps are stuck in the grids and clear if necessary.

b. Flexible Pipework
Daily / Weekly – Due to the different densities of powder and the airflow it is possible powder will begin to settle. The flexible pipe should be checked initially daily to make certain maximum flow is maintained.

c. Internally
Monthly – After the first month it is advisable to remove a side panel from each of the rumblers to check for debris build up inside.
This can be done without the need of excessive protective clothing by leaving the Airmaster extractors running thereby creating negative pressure.
Remove a side panel and using a torch check the inside of the casing for any build up. If the draws have been emptied regularly then this build up will probably be minimal.
In the case of the Multi-Purpose the powder build up on the floor of the casing can be pushed down the chute. The floor is angled near the join to allow this.

After the first two months you should be able to gauge the frequency required for doing this in the future and you may be able to extend the inspection period.

d. Rumbler wheels
The rumbler drums run on nylon wheels. These can be checked with the machine isolated and the drawers at the infeed of the rumbler removed. The wheels can be felt for grooving and flat spots, but everyday maintenance should prevent excessive wear.
If a noise develops from the rumblers, e.g. slight banging/knocking it may be the wheel requires changing.

e. Conveyors
The conveyor belts should be checked regularly for wear and damage. In the case of the infeed crusher belt this should be checked to see if anything is trapped between the conveyor and breaker plate which could cause damage to the belt if not removed. With the Airmasters running for negative pressure lift the lid and check the belt. A hand brush can be used to clear away loose debris. If anything is trapped it can be removed by hand or a pair of pliers may be needed to gently free it. It may be by running the conveyor in reverse for a few seconds is enough for it to free itself.

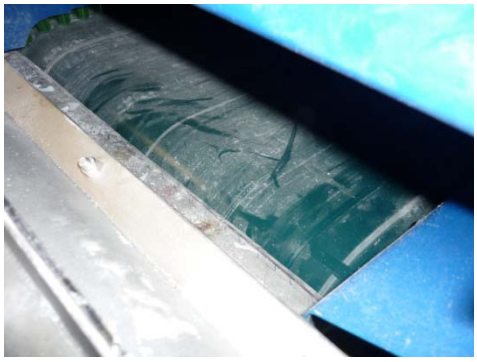

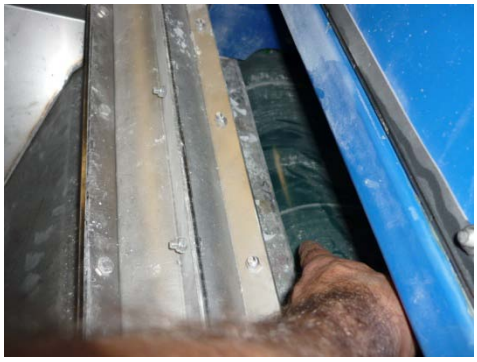

Balcan MP8000 Visual Operating Instructions

The Balcan MP8000 lamp recycling system incorporates two main sections.

Section 1 is a lamp crushing unit for linear fluorescent tubes ONLY

Section 2 is the Universal / Multi-purpose unit which is used for processing the following:

Drum of crushed lamps
All other types of bulbs and lamps, e.g. CFL, HID, etc…

Please note you should not process low pressure sodium lamps through this system due to the high sodium content. These will require separate processing to neutralise the sodium. These lamps are referred to as SOX lamps and usually the glass has an oily appearance.

The complete system is controlled by the Main Control Panel which starts and stops the machine in sequence at pre determined times. The panel is fitted with an emergency stop and also a 'quick stop button. The red sequencing light will flash and a siren will sound if a problem occurs. The system will shut down; however the air filtration units still continue to run to keep everything at negative pressure.

The linear tube crushing unit consists of two flatbed conveyors to transport and fully encase linear tubes prior to crushing.

The Universal rumbler unit is also supplied with a small control unit for the hydraulic operation of the tipper section only.

At the time of installation the system was run and speed settings were set. There is no need to adjust these as it may affect the quality of the outputs. The speed adjusts potentiometers are fitted to the left hand door of the control panel behind a locked door. Adjusting these increases or decreases the frequency inputs to the motors.

To start the system turn the main power handle to ON.

Press the RESET Button:
There should be a slight clunk noise as the contactors within the cabinet energise. The red lights on the cabinet will also illuminate.

Press Auto Start and the system will now run through sequential start-up, with the exception of the Universal Rumbler, conveyor and crusher. When the Auto Start is pressed the siren and light on top of the cabinet sounds for 3-5 seconds to warn people the system is starting.

To Process Linear Tubes load lamps onto the flatbed

To Operate the Universal Rumbler:

Go to the Main Control Panel and manually start the following in order:
1. Conveyor to Bag Hopper
2. Feeder to Bag Hopper
3. Universal Rumbler

Please note:
They will not start in any other sequence.
They should be stopped in Reverse order otherwise the other parts will cut out as well, e.g. If the Feeder button is pressed when the Universal Rumbler is in operation both the feeder and rumbler will stop.

Important:
These components are only manually operated and will continue to run even when the rest of the system has been put into Auto Stop.

Once the Universal Rumbler is in operation lamps, bulbs or drums can be loaded in to the drum loader. Lift up the top door and undo the bottom door. Do not allow the bottom door to drop as this can spring the hinges.

A drum can now be loaded. Alternatively the bottom door can be kept closed to allow smaller lamps and bulbs to be loaded loosely.

After loading and closing the doors there are now two options.
Operate the drum tipper manually
Operate the drum tipper automatically.

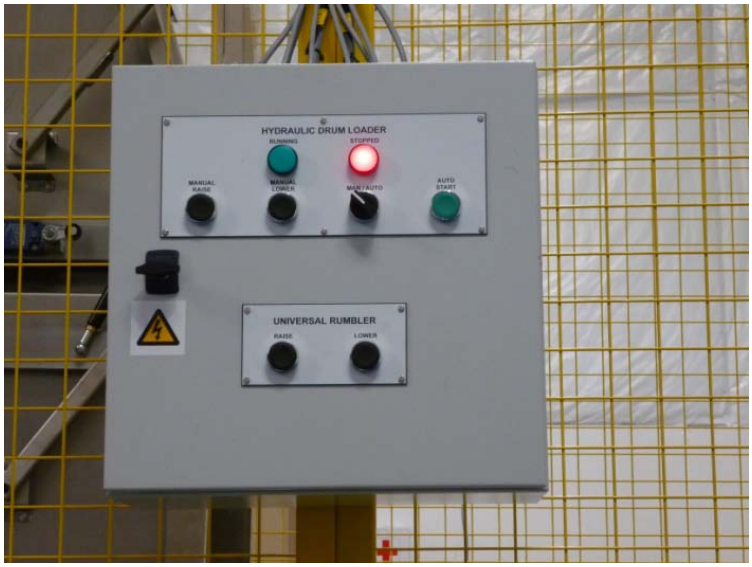

Select Man/Auto depending on which method you decide.

Please note the hydraulics will not operate if the cage door is open as the micro switch needs to be pressed. If the door is opened during auto operation the drum tip will cease operation and require to be reset by operating manually.

To operate in Auto mode, press the Auto button. The tipper will lift to three pre determined positions determined by three sensors.

To operate in Manual mode, switch to Man and press the Manual Raise until the tipper moves to just above the horizontal position. This will allow some debris or lamps to feed into rumbler. After 1-2 minutes press again until it moves again. It should take three goes to reach full height.

After the drum has reached full height press the Manual Down and the tipper returns back to the home position.
Both Manual Raise and Lower require the button to be kept pressed during the operation or the hydraulics will stop.

Please note if bulbs are loaded too quickly then there is the possibility intact lamps will pass through the rumbler without having chance to break.

The Main Rumbler Raise and Lower buttons are only for use to lift the Rumbler itself and is only required if you need to empty out the rumbler for cleaning, servicing or if different types of lamps have to be processed separately.

STOPPING THE MACHINE

There are three ways to stop the system:
1: Emergency Stop
2: Quick Stop
3: Auto Stop

1. The emergency stop buttons situated around the system are for exactly what they say – An Emergency. They should only be used if it is necessary to stop the machine immediately. Using the Emergency Stop circuitry as a quick stop method runs the risk of damaging the electronic components in the control panel as the electric supply is stop instantly whilst everything is under full load. If the emergency stop is used all parts of the system are isolated from electrical supply including the air extractors (this does not apply when using the lamp crusher E-Stop).
2. The Quick Stop Button on the control cabinet is designed to be used for changed full containers. Pressing the button kills the signal from the variable speed inverter controllers to the motors. The inverters remain powered as does the air system. To restart it is only necessary to press the Auto Start button.
3. Auto Stop is there to switch off the system in sequence. Each part of the system stops after a pre determined time to ensure it is empty (the rumblers will not be empty). The shut down sequence will take 3-5 minutes as the spiral vibrator requires 2 minutes to empty and the air extractor run on for another 3 minutes.

To Auto stop the system just press the button. After pressing the sequence cannot be interrupted without pressing the E-Stop and resetting – Not advised.

When the Auto sequence has finished the control panel will be lit with the red leds. Turn the main power handle to off.

MJC Mini Cartridge Filters

Installation, Operation and Maintenance Manual.

Unit designation:

MJC Mini 4/22/21, 8/40/21;
MJC Mini 9/22/22, 16/40/22, 26/66/22;
MJC Mini 13/22/32, 24/40/32, 40/66/32..

Manufactured by: Dantherm Filtration Ltd, Seacroft, Leeds LS14 1NG. UK
Telephone number: +44 (0) 113 273 9400.

Description of units and intended use.
The MJC Mini is a range of compact cartridge filters with reverse jet cleaning designed particularly for smaller ventilation and dust collection, where the duty is continuous and / or arduous.

The open based filter versions will normally be bolted to a prepared flange on the vessel or container to be ventilated.
Units fitted with a base unit and quick release bin may be free standing or secured to the floor.
All units may be specified with a built-in ventilating fan for dust extraction purposes or to maintain a small negative pressure in the system. Standard fan sizes are 0.75, 1.1 2.2 and 3.0kW. A 4.0kW fan may be a special option.

Typical airflow volume capabilities range from 500 to 3000m³/h.

Handling.
The filter units are supplied with two slinging points incorporated into the lid construction.

- **Safety note:** ensure that the lid is securely bolted in the closed position before lifting using the slinging points.

The units may also be handled by forklift truck when mounted on a suitable pallet.

MJC Mini Unit typical weights: all weights kg.

	MJC Mini 13/22/32 no fan	MJC Mini 24/40/32 no fan	MJC Mini 40/66/32 no fan
Insertable	102	108	114
Cased vent	146	178	215
Cased with low tray-style, QR bin	184	216	253
Cased with hopper, QR bin	196	228	265

	MJC Mini 9/22/22 no fan	MJC Mini 16/40/22 no fan	MJC Mini 26/66/22 no fan
Insertable	83	87	91
Cased vent	120	145	175
Cased with low tray-style, QR bin	151	176	206

	MJC Mini 4/22/21 no fan	Mini 8/40/21 no fan
Insertable	37	39
Cased vent	58	74
Cased with inlet	90	111
Cased with inlet and tray-style QR bin	121	142

Add weight in kg. for optional items: -

Silencer	12
Silencer W/cwl	1.5
0.75 kw fan	38
1.1 kw fan	40
2.2 kw fan	46
3 kw fan	53
Bin Balance	2
Vent W/cowl	2

INSTALLATION.

IMPORTANT: the mechanical and electrical installation must be performed by suitably qualified and experienced personnel.

For UK installations: Approved electricians should be employed and an NICEIC or equivalent certificate obtained upon completion. Warranty claims relating to any electrical components will not be entertained unless a valid NICEIC or equivalent certificate is available.

Open based units should be sealed and securely bolted to a prepared flange on top of the vessel or housing to be ventilated. The units are supplied fully assembled. The required unit and flange dimensions are given in the information below. Units with the standard base units and quick release bin may be free standing or secured as appropriate.

MJC Mini 4/22/21 and 8/40/21

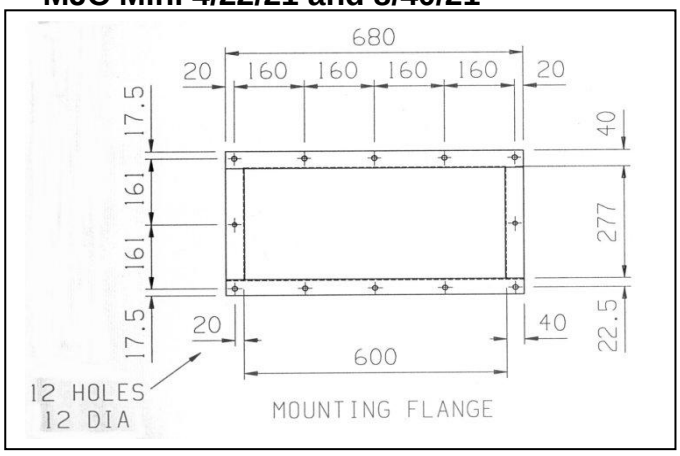

A suitable gasket or tube sealant material should be applied inboard of the base flange holes before bolting in place, to prevent leakage during normal use.

MJC Mini 4/21 and 8/21 - continued

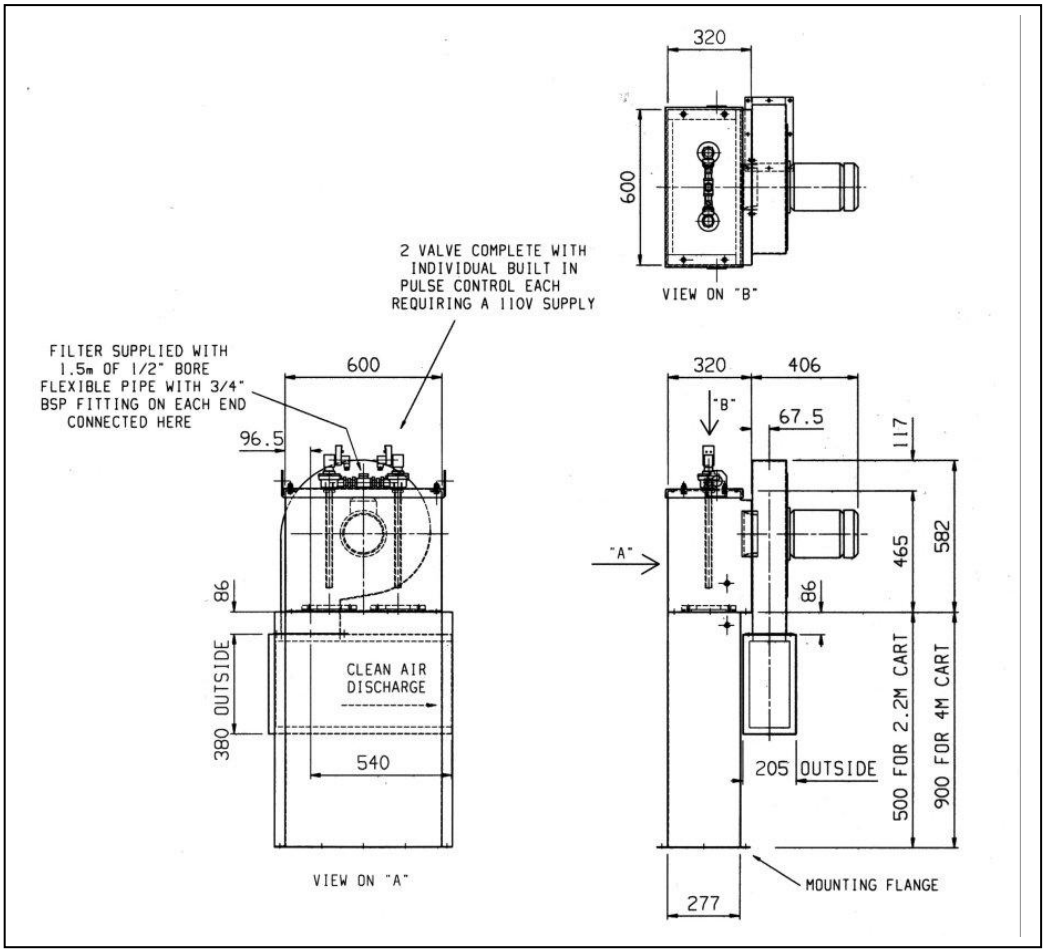

MJC Mini 9/22/22, 16/40/22 and 26/66/22

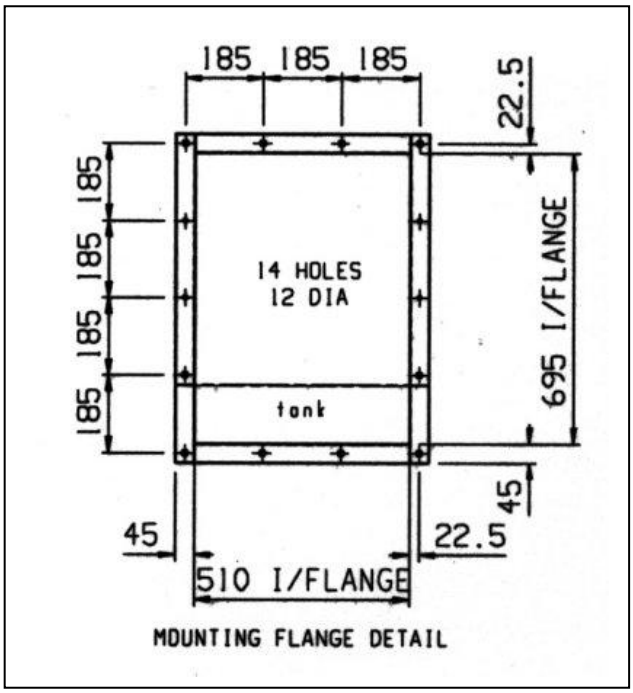

A suitable gasket or tube sealant material should be applied inboard of the base flange holes before bolting in place, to prevent leakage during normal use.

MJC Mini 9/22/22, 16/40/22 and 26/66/22 - continued

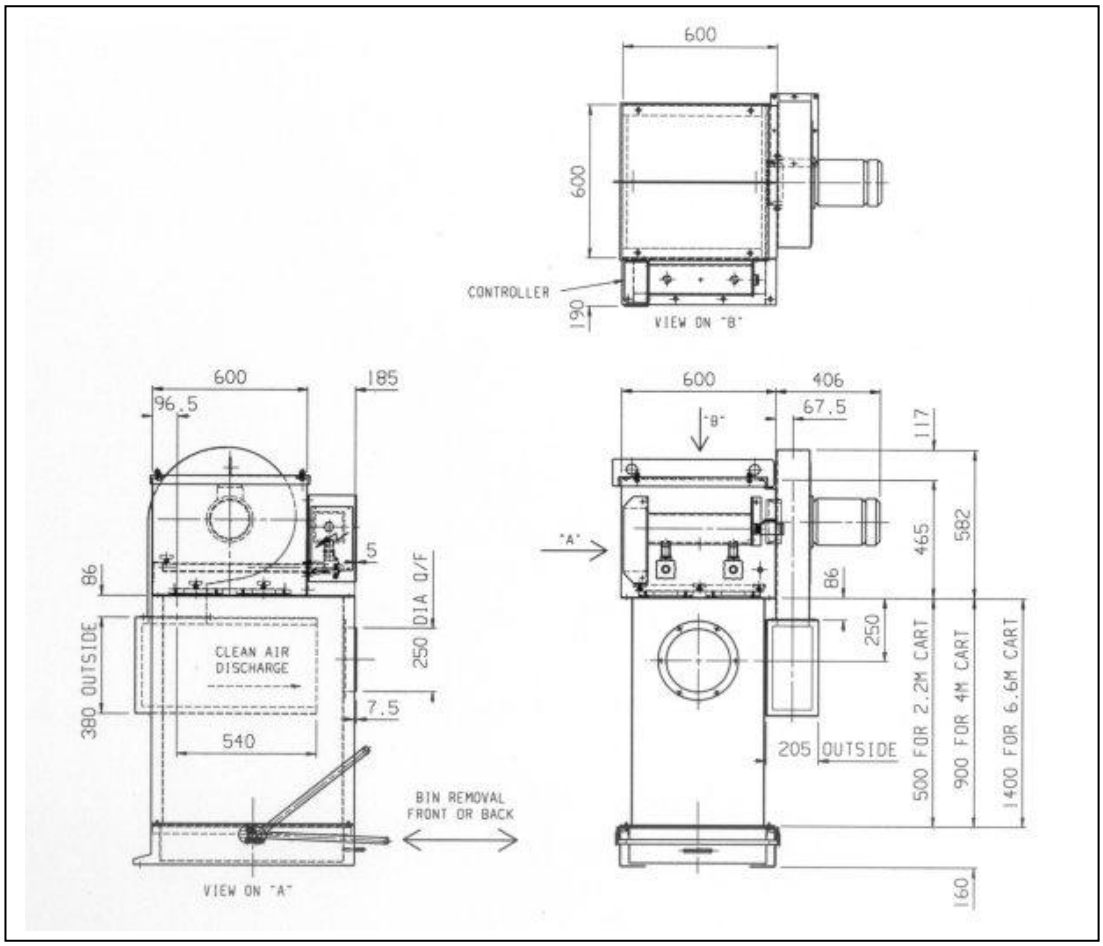

MJC Mini 13/22/32, 24/40/32 and 40/66/32

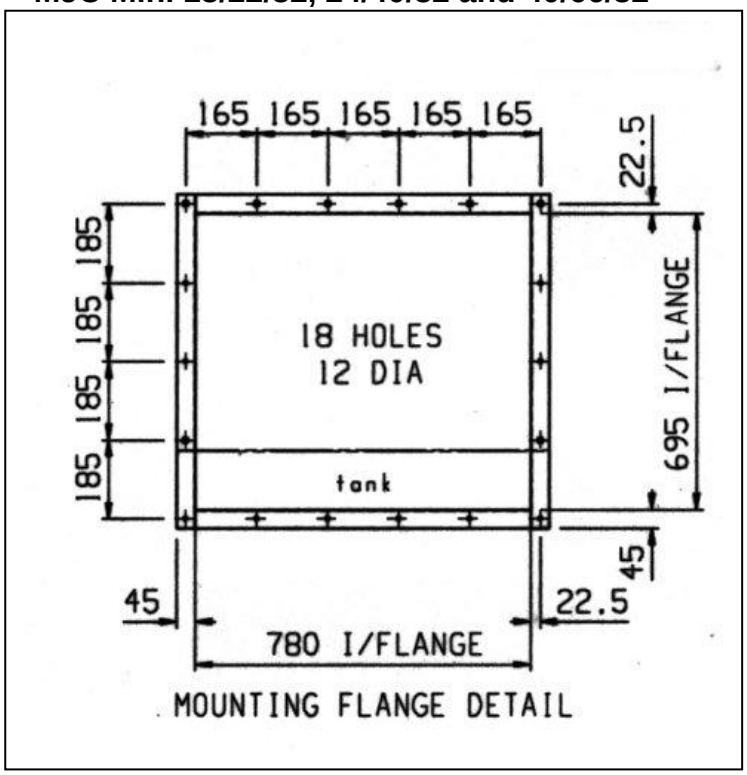

A suitable gasket or tube sealant material should be applied inboard of the base flange holes before bolting in place, to prevent leakage during normal use.

MJC Mini 13/22/32, 24/40/32 and 40/66/32 - continued

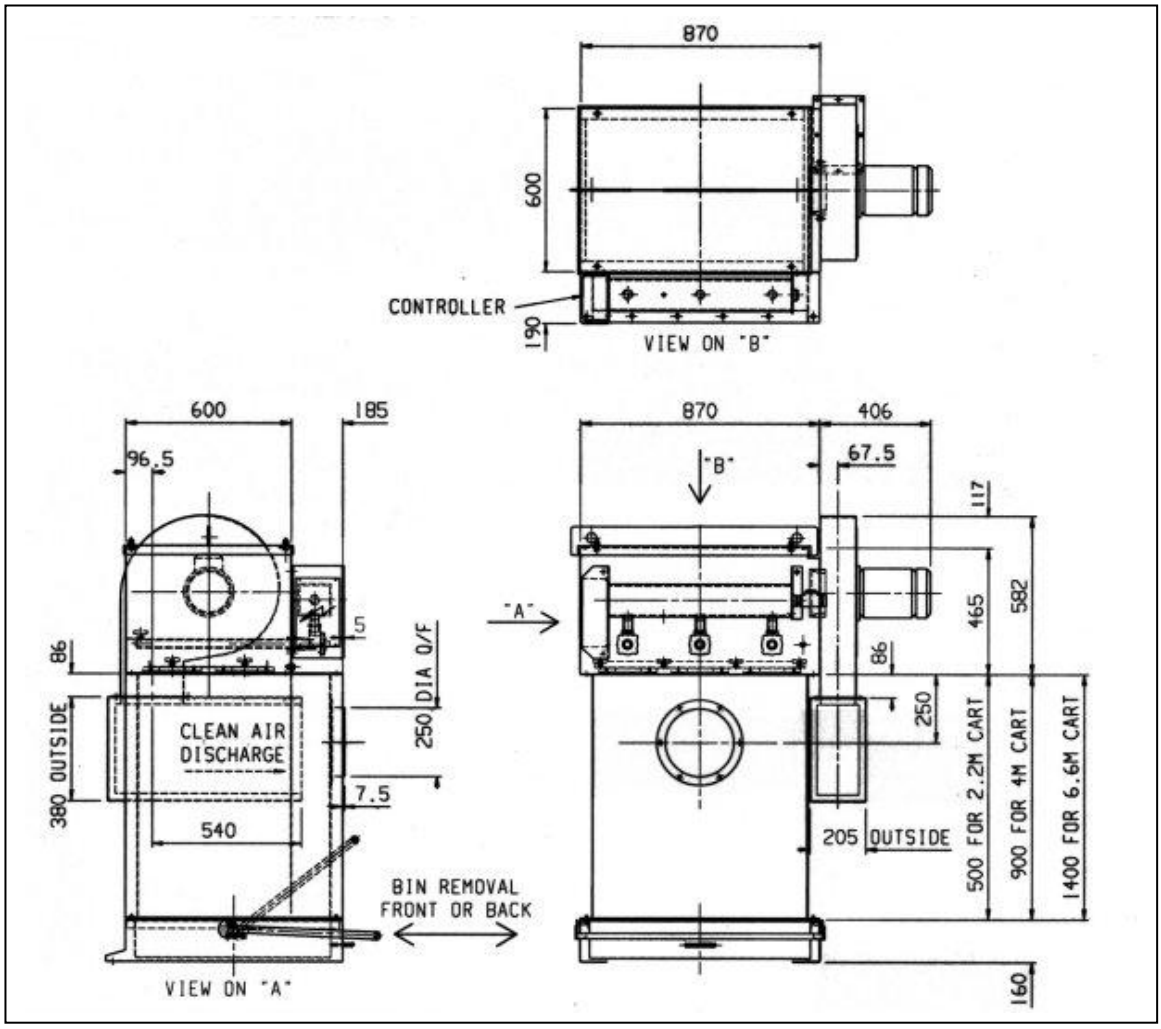

Connections – mechanical.
When the unit has been securely bolted into position, the compressed air supply for the reverse jet cleaning may be connected directly to the compressed air tank, which has a ½" BSP female fitting.
Note that the MJC Mini 4/22/21 and 8/40/21 units have no tank, simply a pipe connection. These units are supplied with a flexible pipe with a ¾"BSP connection to facilitate access for maintenance. The compressed air system should have the capacity to operate the filter reverse jet cleaning system. Details are given below: -

Reverse jet cleaning: single 4.7 or 7.7 litre steel compressed air reservoir.
Max. working pressure: 7.0 bar.
Test pressure: 13.0 bar.

Normal cleaning pressure for cartridges: **5.5 barg.** The compressed air should be dry and free from oil. A pressure regulator should be fitted to ensure that the pressure in the filter receiver is limited to 5.5barg. The normal working range is from 5.0 to 5.5barg. Lower pressures may result in less effective filter cartridge cleaning.

Compressed air consumption (typical): 50 Normal litres per pulse (Mini 4/22/21, 8/40/21).
60 Normal litres per pulse (all other units)
For a typical two minute cleaning cycle operating continuously, this would be equivalent to: -
3.0 Nm³/h for the MJC Mini 4/22/21 and 8/40/21 models,
3.6 Nm³/h for the MJC Mini 9/22/22, 16/40/22 and 26/66/22 models,
5.4 Nm³/h for the MJC Mini 13/22/32, 24/40/32 and 40/66/32 models.

Cleaning valves:
MJC Mini 4/22/21 and 8/40/21: - combined 3/4" diaphragm / solenoid valve, 110 or 127V AC, 50 / 60Hz. 24V DC available upon request.
Number of cleaning valves: 2 Each valve services 1 cartridge.

MJC Mini 9/22/22, 16/40/22, 26/66/22: - combined 1" diaphragm / solenoid valves, 110, 127, 220 or 240V AC, 50 / 60Hz. Other voltages upon request.
Number of cleaning valves: 2 Each valve services 2 cartridges.

MJC Mini 13/22/32, 24/40/32, 40/66/32: - combined 1" diaphragm / sol. valves, 110, 127, 220 or 240V AC, 50 / 60Hz. Other voltages upon request.
Number of cleaning valves: 3 Each valve services 2 cartridges.

Reverse jet timer controls:
MJC Mini 4/22/21 and 8/40/21: - direct mounted individual timer, one per valve.
All other MJC Mini units: - 3-way printed circuit board housed in IP65 enclosure protected by a 1amp circuit board fuse.

Connections – electrical.
For UK installations: Approved electricians should be employed and an NICEIC certificate obtained upon completion. Warranty claims relating to any electrical components will not be entertained unless a valid NICEIC certificate is available.

MJC Mini 4/22/21 and 8/40/21, no fan: -110V single phase 50 or 60Hz
MJC Mini, all other models, no fan: - 110 or 220V single phase 50 or 60Hz.

Fan, if fitted: - typically 380/415V 3-phase for any fan up to 3.0kW or optional 220/240V single phase supply for 0.75, 1.1kW fan only, as required.
If a fan is fitted, connections should be made directly to the motor terminal box. The fan motor may be up to 3.0kW (4.0kW special option). The fan case is fixed rigidly to the filter body. The fan motor should be supplied via a suitable starter/controller, such as Dantherm M1 to M4 for European applications, M5 to M8 for US applications.

Method of Control.
Fan assisted units: -The filter reverse jet controller and fan should be controlled in such a way that the reverse jet cleaning and fan are energised together. At end of the duty the fan should be de-energised but reverse jet

cleaning should if practicable remain run on for a few minutes. This after-clean period will be particularly useful if the dust is slightly moist or sticky. Vent. units: - energise cleaning during duty cycle, plus after-clean as above.

OPERATION

When the filter is used for the first time, check that the reverse jet cleaning is operating correctly. Each valve should pulse in turn strongly and with similar intensity. There should be no leakage of compressed air between pulses. Initially the time interval between pulses should be set to give a complete cleaning cycle every two minutes.

If a fan is fitted, check that its direction of rotation is correct. If rotation is incorrect, the fan will provide reduced extraction but the motor is likely to run under overload conditions.

MAINTENANCE

- **Safety note:** Before commencing maintenance work, ensure that it is safe to do so. Isolate the electrical and compressed air supplies. All work should comply with national health and safety regulations.
- Wear suitable protective clothing. Refer to health and safety data for the dust materials to be filtered.

Items that may require attention during the life of the unit are the filter cartridges, the cleaning valves, the electronic controller and fan (if fitted).

Cartridge removal and replacement –
All units except MJC Mini 4/22/21 and MJC Mini 8/40/21

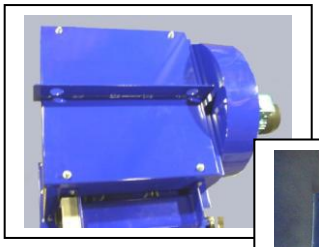

Remove the nuts securing the lid and lift off the lid, putting it in a safe position.

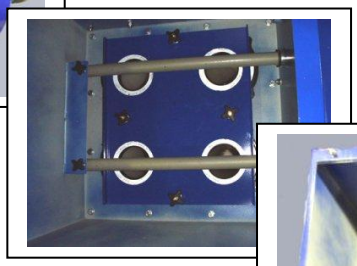

Unscrew knobs securing jet tubes and withdraw jet tubes from socket.

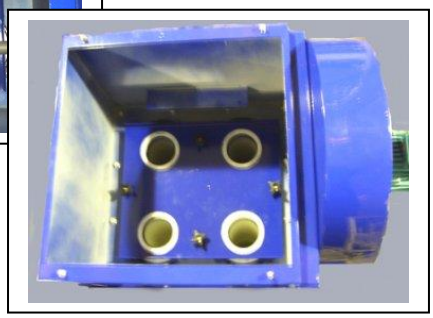

Unscrew and remove the knobs and washers from the cartridge clamping plates. Remove the clamping plates.

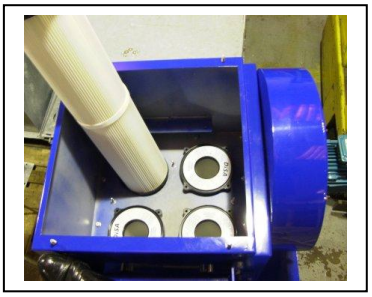

Withdraw the cartridges, shaking them first before extracting to remove excess loose material.
You are strongly advised to replace the black cartridge sealing ring before re-fitting a cartridge.

Before replacing the cartridges, clean the area around the cartridge sealing ring location. Insert the cartridges carefully. Locate the cartridge clamping plates and screw down the clamping plate knobs firmly but evenly by hand. Do not overtighten by using a tool. Then replace jet tubes and lid.

Cartridge removal and replacement –
MJC Mini 4/22/21 and MJC Mini 8/40/21 only

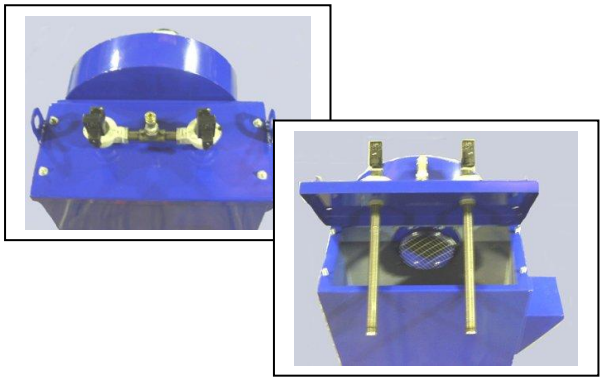

Remove the nuts securing the lid and lift off the lid, putting it in a safe position, so that the wiring and compressed air hose are not stressed.

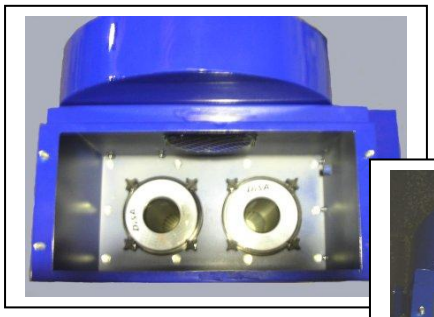

Unscrew and remove the knobs and washers securing the cartridges.

Withdraw the cartridges, shaking them first before extracting to remove excess loose material.
You are strongly advised to replace the black cartridge sealing ring before re-fitting a cartridge.

Before replacing the cartridges, clean the area around the cartridge sealing ring location. Insert the cartridges carefully. Screw down the four cartridge clamping knobs firmly but evenly by hand. Do not overtighten by using a tool.

Cleaning valves.
MJC Mini 4/22/21 and 8/40/21. There are two diaphragm type cleaning valves fitted directly onto the filter lid. Each diaphragm valve incorporates a solenoid pilot valve and a single reverse jet timer (see reverse jet controller below).

All other MJC Mini models. These have two or three diaphragm type cleaning valves connected to a small compressed air manifold tank secured to the side of the filter body. The solenoid valves are connected to a separate controller (see Reverse jet controller below).

It is possible that a diaphragm may require replacing. To do this, isolate the compressed air supply and disconnect from the valve. Remove the diaphragm valve lid slowly after removing its securing screws. Note whether any oil or water is present. If there is, check the condition of the supply filter / separator or the compressor itself.

There may be a loose coil spring located on the diaphragm. Be careful not to lose this item as the unit is taken apart. When replacing a diaphragm, ensure that all surfaces are clean, to prevent subsequent leaks. Do not forget the spring, if fitted.

To remove a solenoid coil, first check that the electrical supply is safely isolated. Then remove the clip on its retaining post and slide the unit off. Remove the electrical connector after unscrewing its retaining screw.

Check wiring for mechanical damage. If any external wiring is replaced, ensure that suitable weatherproof sealing glands are used.

Reverse jet controller. (except Mini 4/22/21 and 8/40/21)
This is housed in an IP65 enclosure on the filter unit. Apart from a circuit board fuse plus adjusters for the cleaning pulse duration and interval, the timer contains no serviceable parts. If a fault occurs with the controller the complete timer board should be replaced. This is fixed in the enclosure by four screws.

When replacing this item, note carefully the positions of the electrical connections so that they may be replaced in identical positions.

It is possible that the time interval between pulses may require adjustment, if more or maybe less cartridge cleaning is required. To do this, open the controller lid and locate the circular slotted potentiometer marked “Interval”. Clockwise rotation increases the time interval. Do not adjust more than a quarter turn at a time. To check the new setting, energise the cleaning and measure the new time interval. The maximum interval available is approximately 70 seconds.

The control marked **“Duration”** should **NOT be adjusted**, as this would alter the factory setting of 100 milliseconds. This could adversely affect the cleaning performance.

Reverse jet controller - Mini 4/22/21 and 8/40/21 only.

Each valve is fitted with an individual timer. The timer has two adjustable controls. The duration control marked “ms” should always be set to 100. The other marked “min” is the time between pulses and may be set to suit conditions, but not less than 0.5 minutes.

Fan.
If a fan is fitted, it will be mounted on the side of the filter clean air chamber. Normally no maintenance will be required for the fan, but if removal is necessary, proceed as follows: -

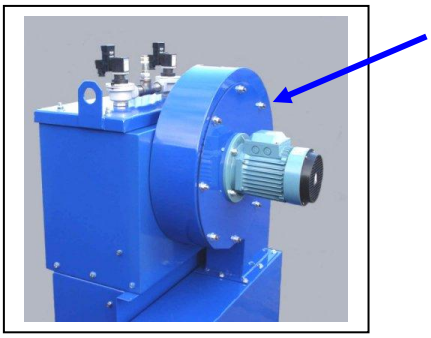

Remove the nuts securing the motor mounting plate to the fan case.

Carefully withdraw the motor and impeller assembly from the fan case.

To remove the fan impeller from the shaft, release the nut from the shaft end and remove it and the metal washer.
Slide the impeller from the shaft. Retain the shaft key.

When re-assembling, ensure that the shaft, key, keyway and impeller bore are clean and free from debris and dust.

The inlet side of the fan is protected by a metal mesh guard. When maintaining the fan inspect the security of this item.

After re-assembly check that the fan operates freely without catching on the inlet components.

Fault location.

Fault	Possible cause	Suggested remedy
Filter becomes blocked unexpectedly	Vessel being ventilated too full, if directly mounted onto vessel Reverse jet cleaning not operating No compressed air pressure Timer board faulty One or more solenoid valves not operating	Check level probe Controller switched off or disconnected Check and reinstate compressed air supply Replace timer board Check output from timer board. If output ok, replace suspect solenoid pilot valve coil
Dust escapes from filter	Damaged cartridge or seal Loose clamping plate	Replace cartridge and seal ring Remove clamping plate and its cartridges. Clean mating surfaces. Replace cartridge sealing rings and replace clamping plate according to maintenance instructions
Filter gradually blocks over a period of time	Insufficient cleaning	Reduce time between cleaning pulses Increase after-clean time Replace cartridges if they are getting old
Cleaning pulse weak	Low compressed air pressure Diaphragm leaking Solenoid faulty	Restore pressure Check and replace diaphragm Replace solenoid coil
For fan-assisted units, the following may apply		
Unexpectedly low fan performance	Fan rotating in wrong direction	Reverse two phases of the electrical supply at the motor terminal box.
Excessive vibration	Dust on fan impeller	Remove and clean fan – check filter for dust leaks
Excessive vibration persists	Fan impeller out of balance	Remove impeller and inspect for damage. Re-balance impeller if there is no obvious damage.

Dismantling.

At the end of its working life, the filter may be removed and dismantled. Disposal of unserviceable items may then be carried out.

To remove the unit, first isolate and then disconnect compressed air and electrical supplies. The compressed air tank (if fitted) should be discharged by carefully opening the drain tap. A flange mounted filter can then be unbolted from the vessel upstand.

- **Safety note:** The filter lid should be secured in the closed position before lifting the unit from its position.
- When the filter is lifted from its upstand, the aperture in the vessel to which it had been fixed should immediately be covered to prevent the possibility of personnel falling into the vessel.

For disposal purposes, please note the following components and their principal materials.

Filter body and lid:	Mild steel painted
Compressed air tank:	Mild steel, painted
Diaphragm valves:	Aluminium alloy, steel, rubber
Controller:	Plastics, copper, electrical circuit board

Filter cartridges: These are composed of various non-chlorinated polymer plastics and contain no metal parts. Safe disposal method will depend upon the nature of the material filtered by the cartridges as traces may remain even after thorough manual cleaning.

Technical assistance and further information.

If you require further information, clarification or technical assistance, please contact the Technical Department.
For UK, please contact: -

Dantherm Filtration Ltd.,
Limewood Approach,
Seacroft,
Leeds.
LS14 1NG.

Telephone:+44 (0) 113 273 9400

dantherm/ajb/210705

Nederman

Instruction manual

Stationary dust collectors

Cartridge dust collector

MJC Mini

Original instruction manual
PL INSTRUKCJA UŻYTKOWANIA

Translation of original instruction manual
DE BEDIENUNGSANLEITUNG
EN INSTRUCTION MANUAL
ES MANUAL DE INSTRUCCIONES

MJC Mini

Figures 4
Deutsch 15
English 53
Español 87
Polski 119

MJC Mini

Figures

1

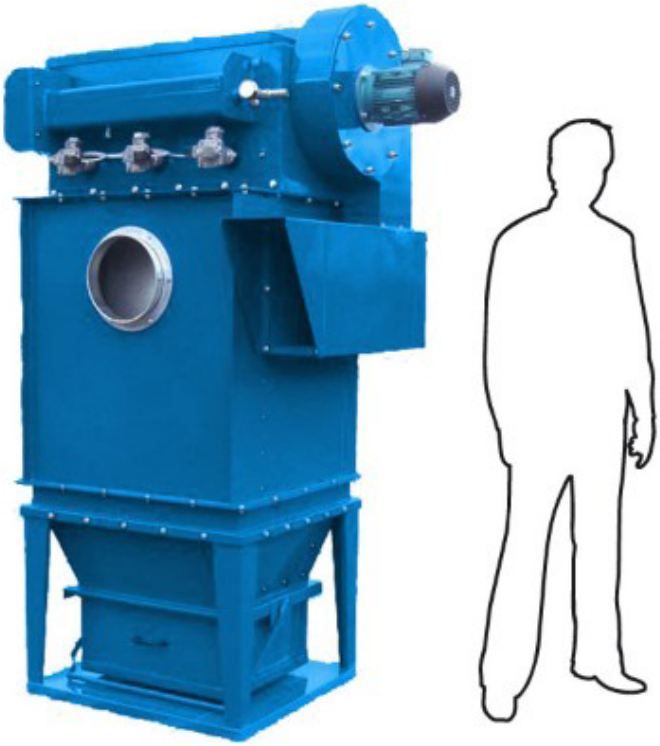

2

3

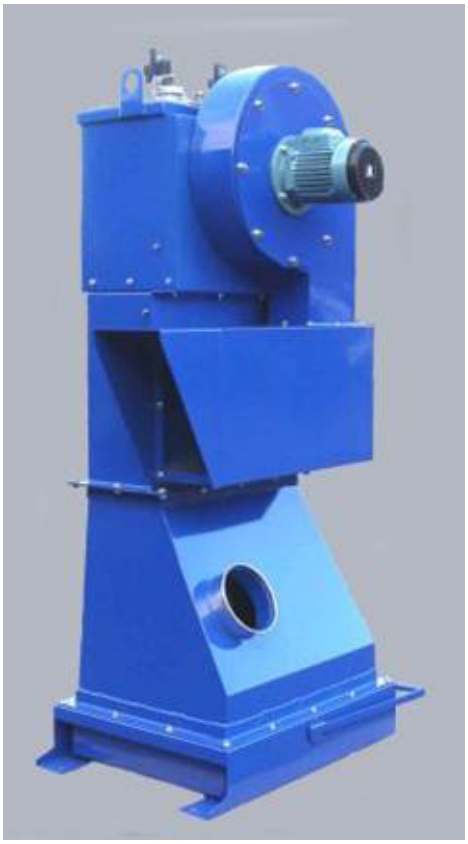

MJC Mini

4

5

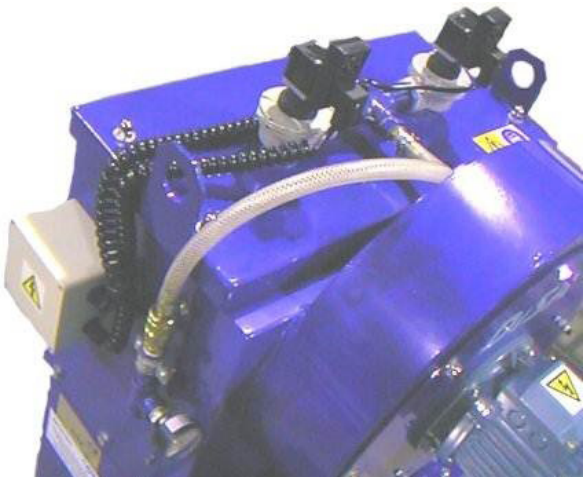

6

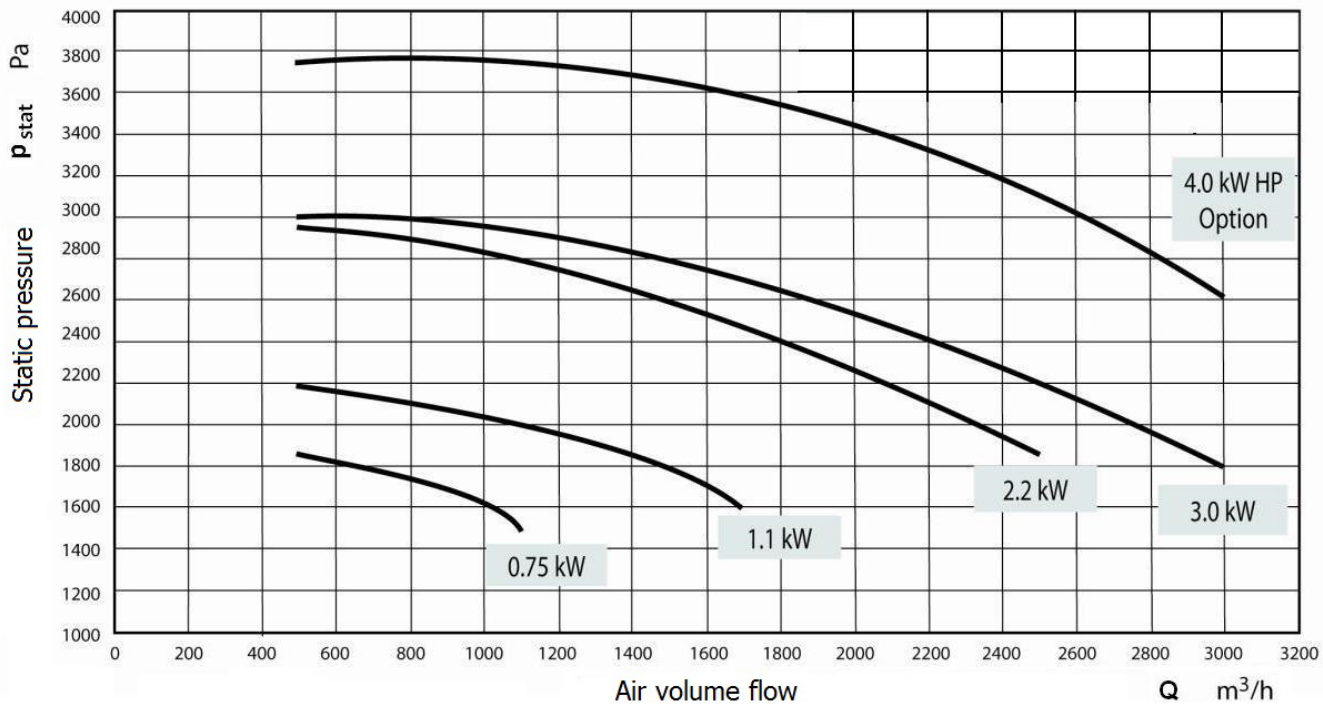
Static pressure p stat Pa
4000
3800
3600
3400
3200
3000
2800
2600
2400
2200
2000
1800
1600
1400
1200
1000
0
200
400
600
800
1000
1200
1400
1600
1800
2000
2200
2400
2600
2800
3000
3200
Air volume flow Q m³/h
4.0 kW HP Option
3.0 kW
2.2 kW
1.1 kW
0.75 kW

MJC Mini

7

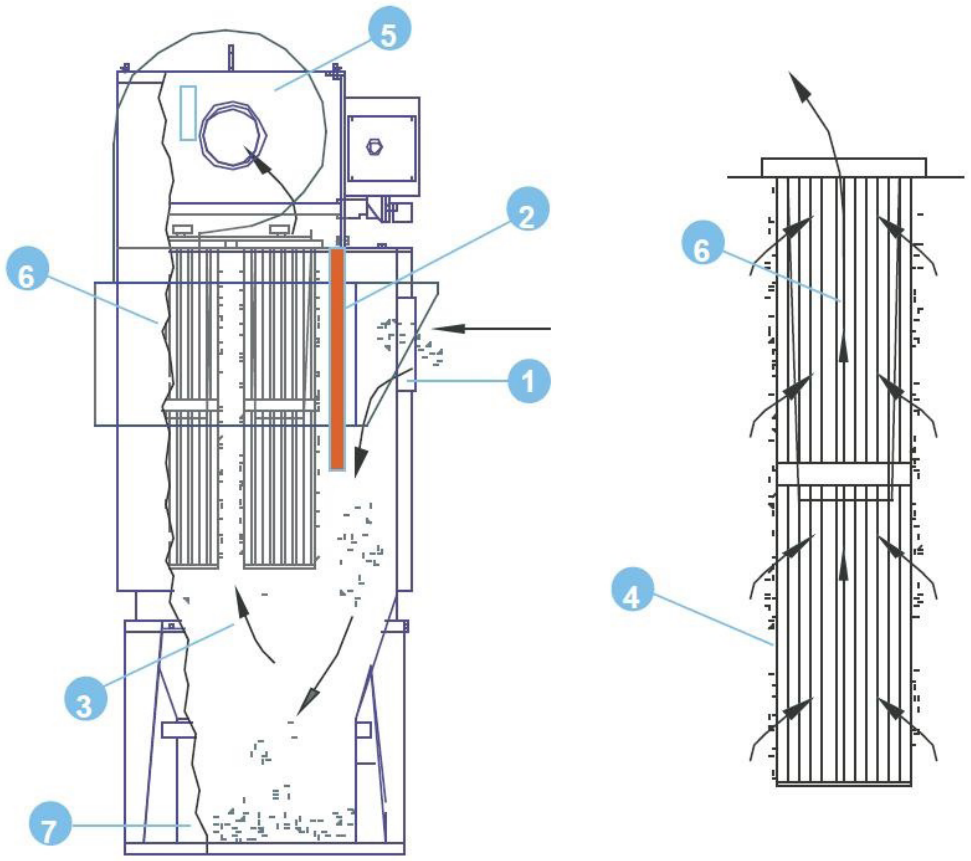

8

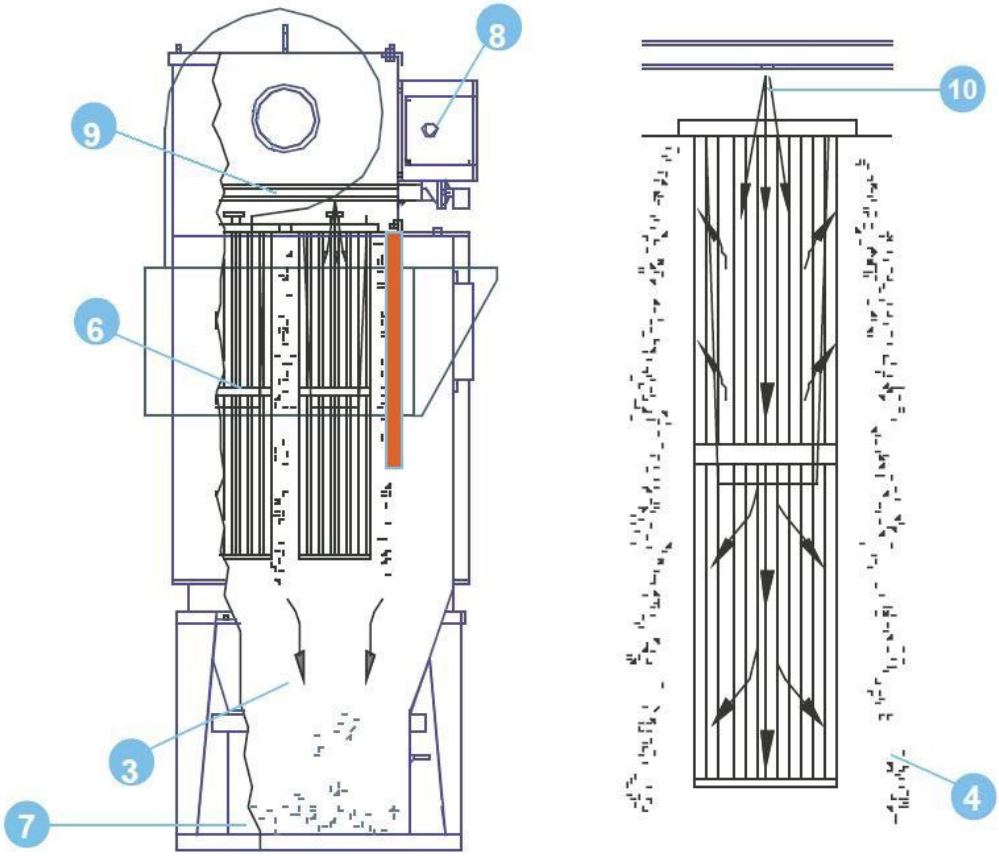

MJC Mini

9

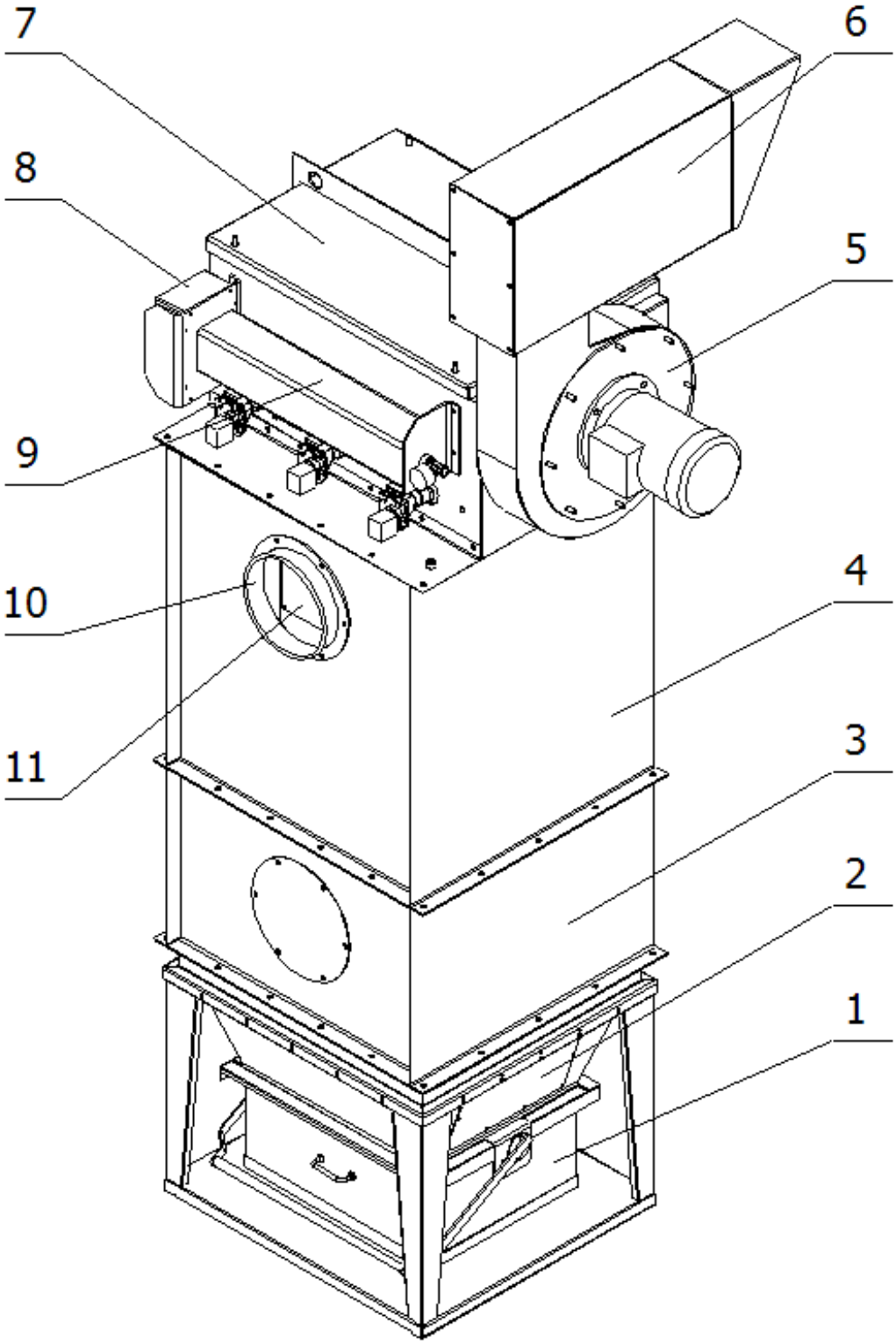

MJC Mini

10

MJC Mini 4/22/2-1, MJC Mini 8/40/2-1

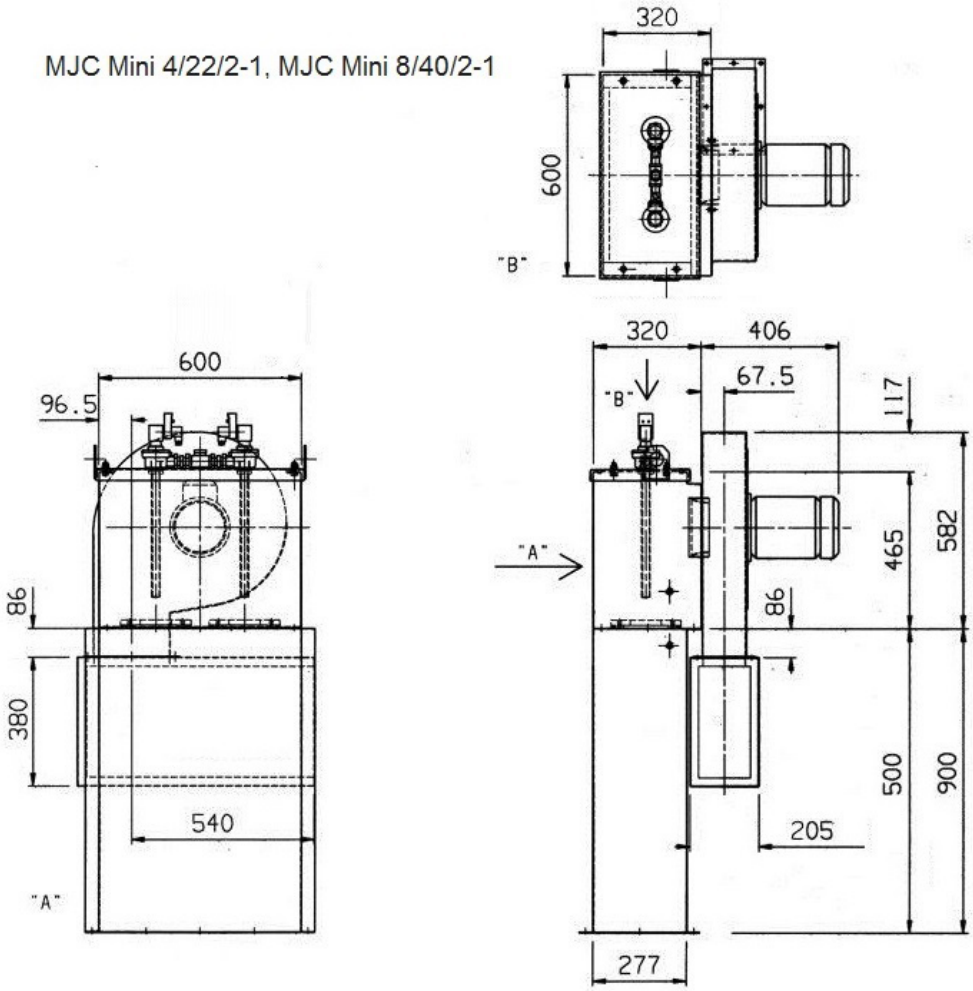

11

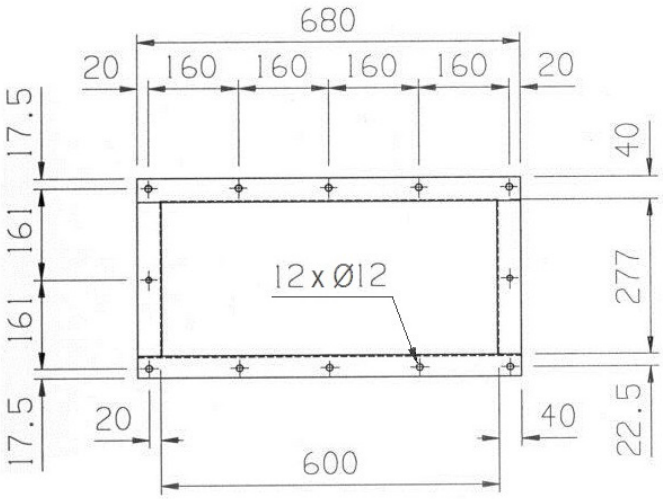

MJC Mini 4/22/2-1, MJC Mini 8/40/2-1

12

MJC Mini 9/22/22, 16/40/22, 26/66/22

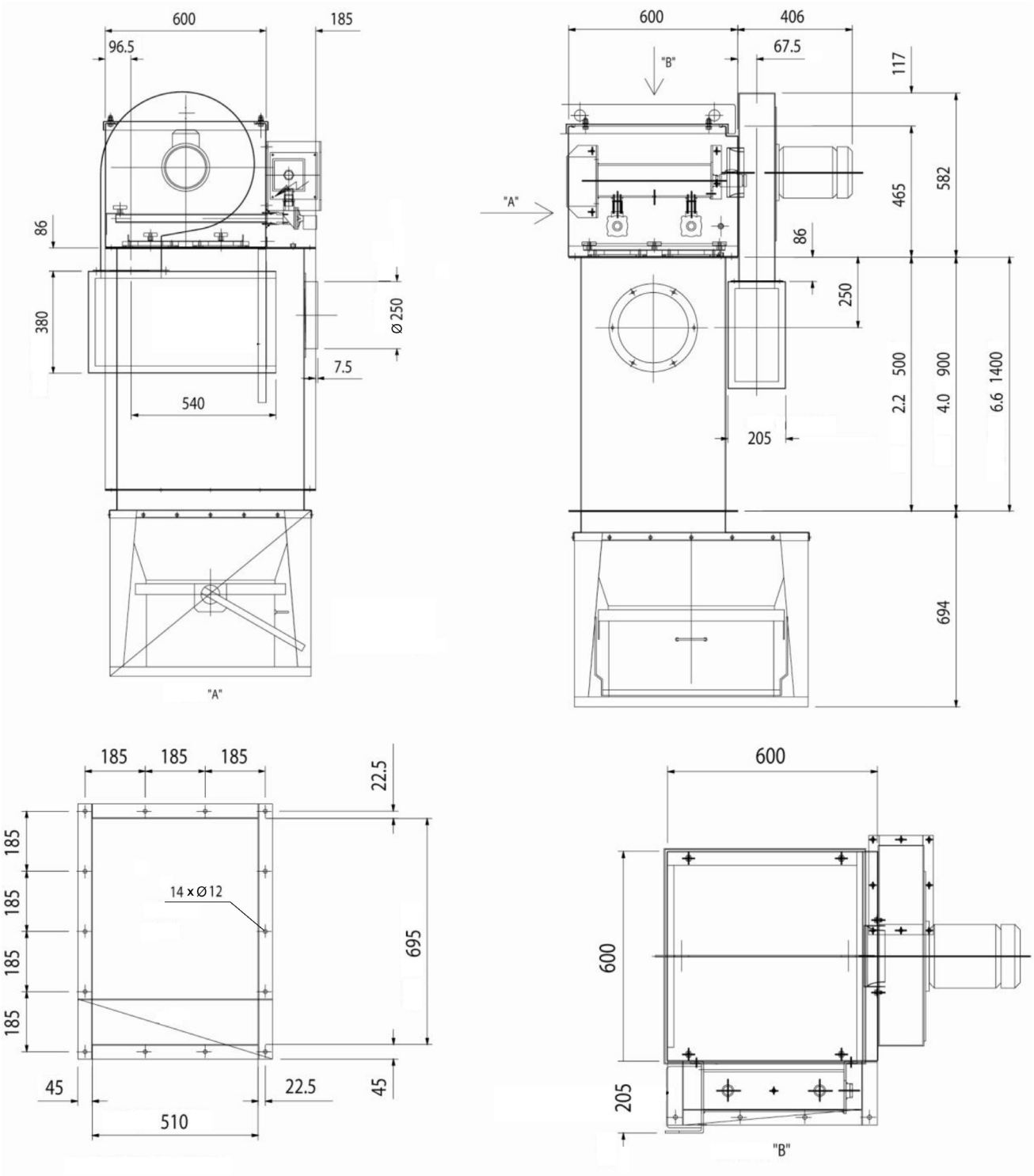

MJC Mini

13

MJC Mini 13/22/32, 24/32/32, 40/66/32

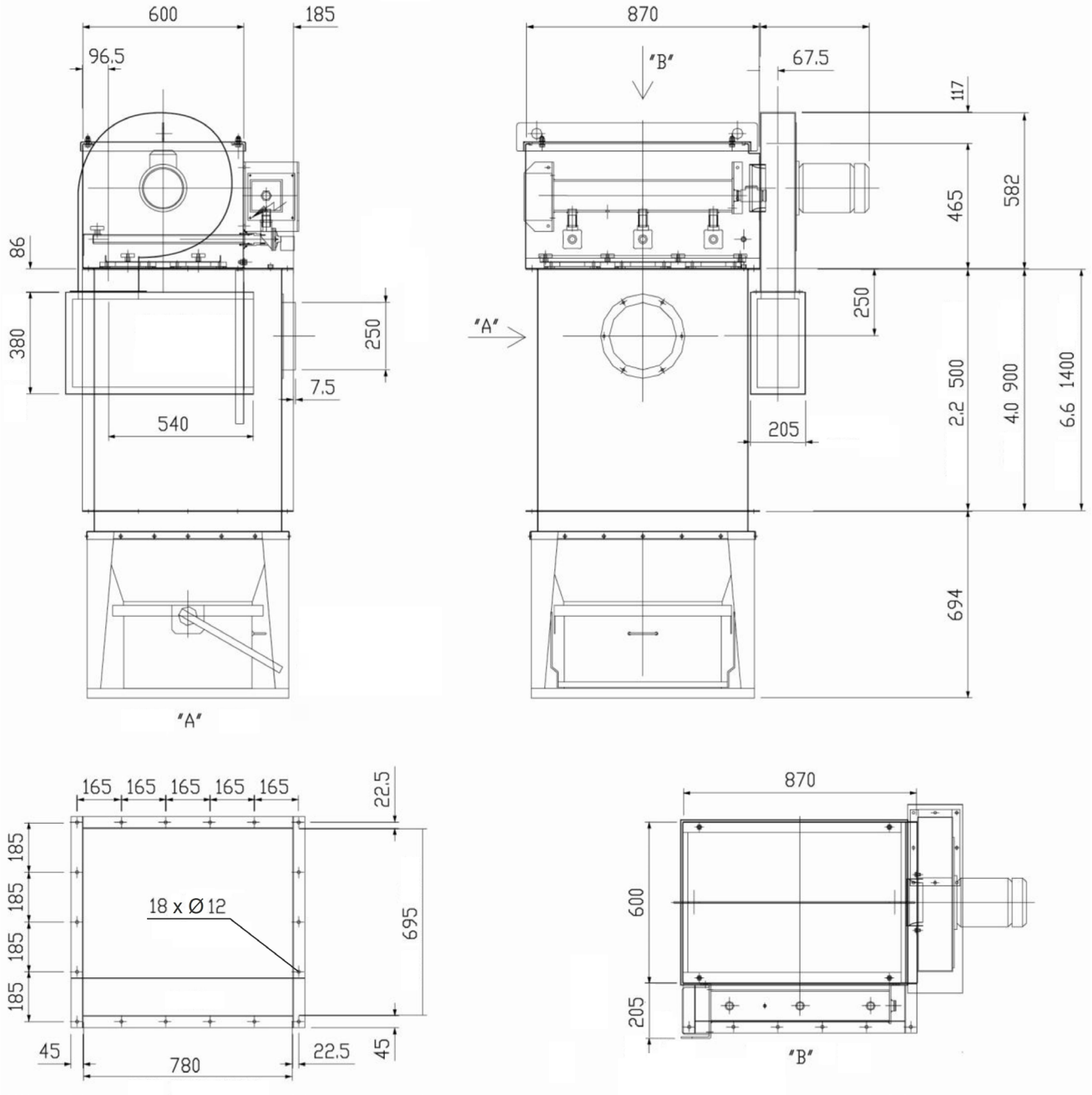

MJC Mini

14

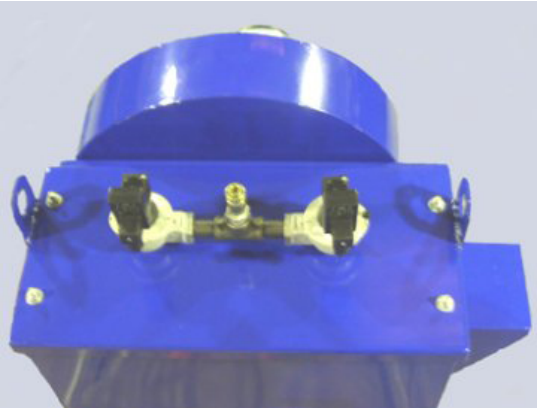

15

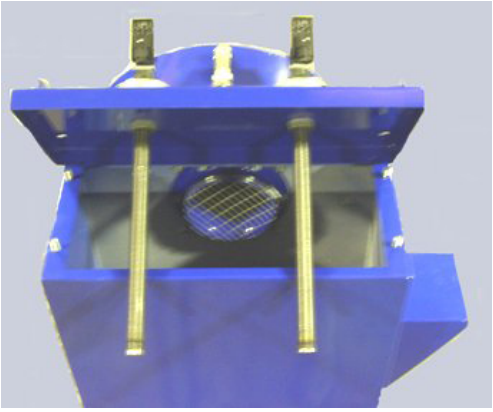

16

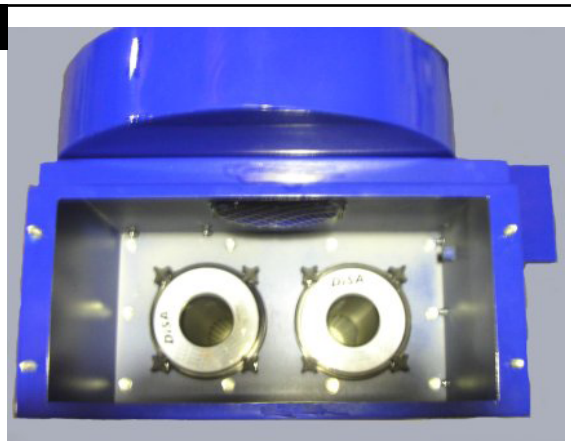

17

18

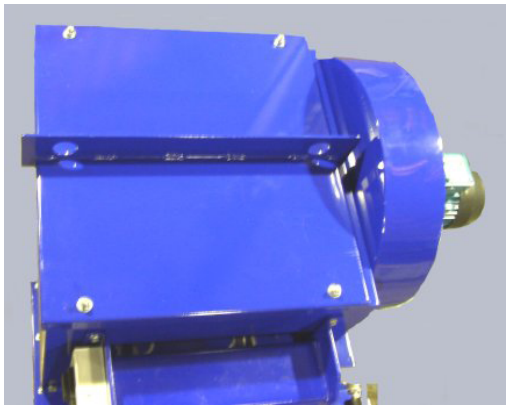

19

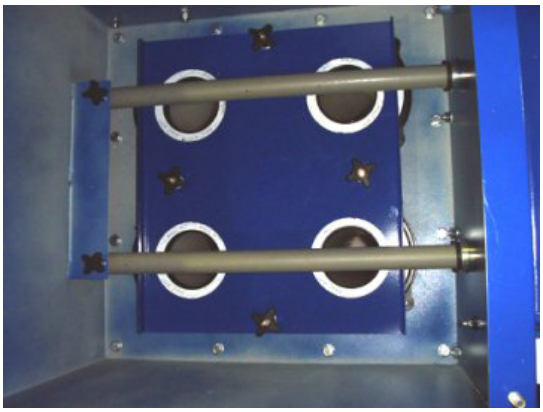

20

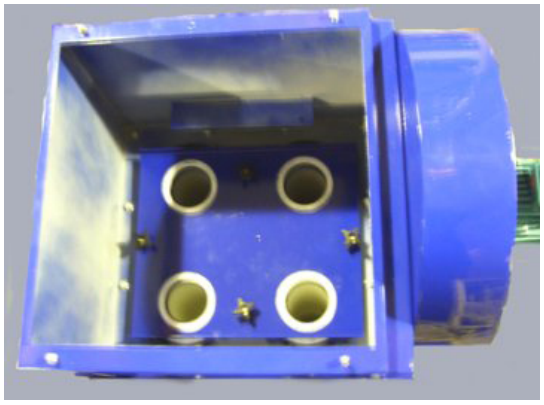

21

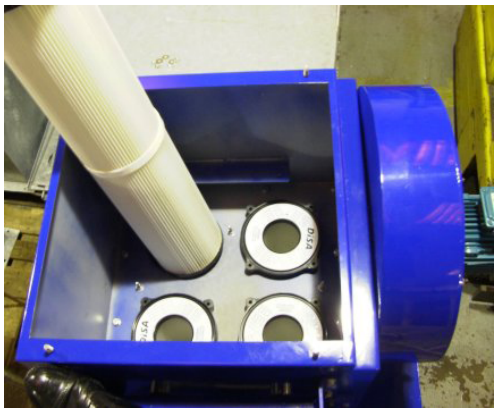

MJC Mini

22

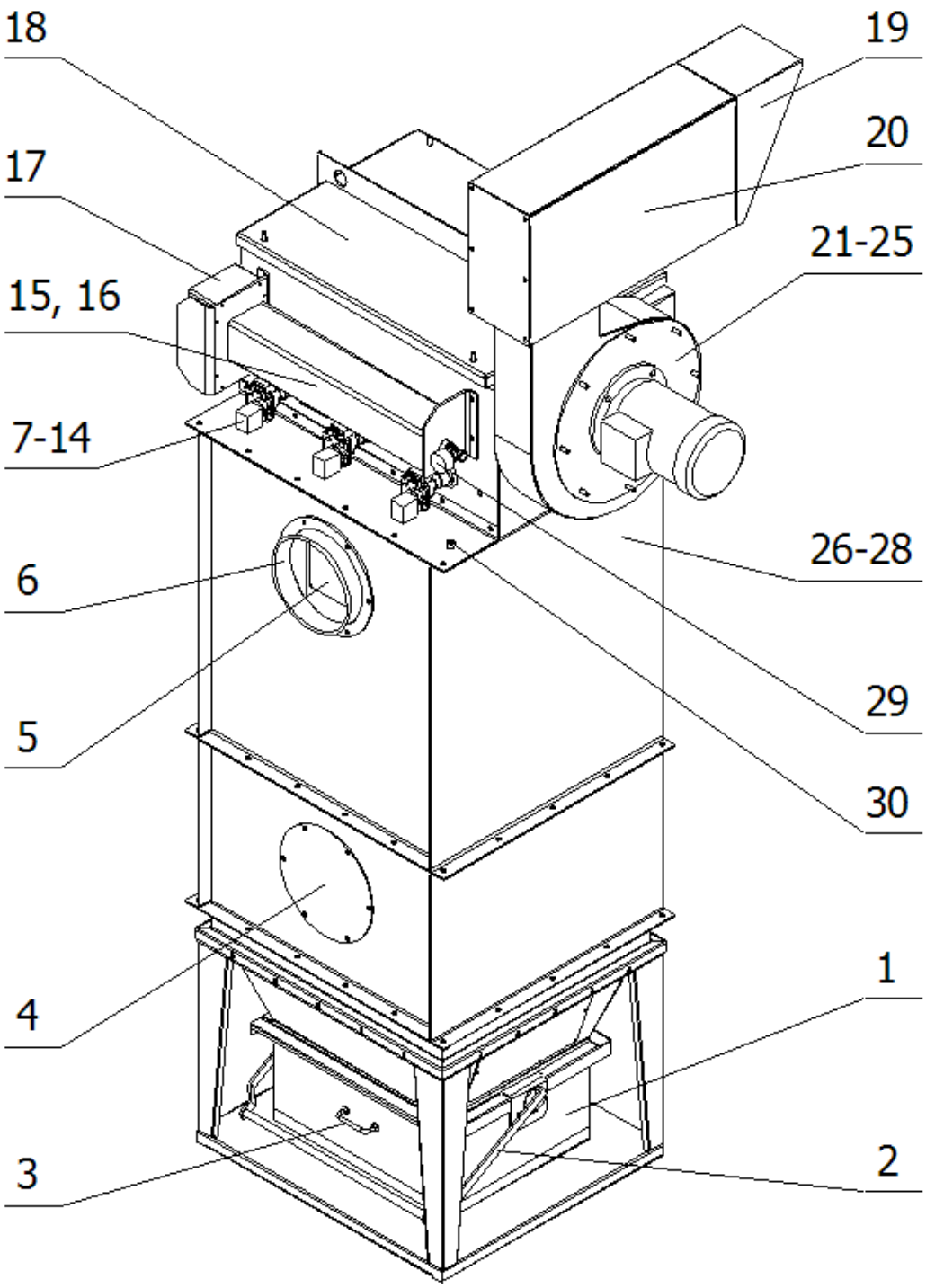

MJC Mini

23

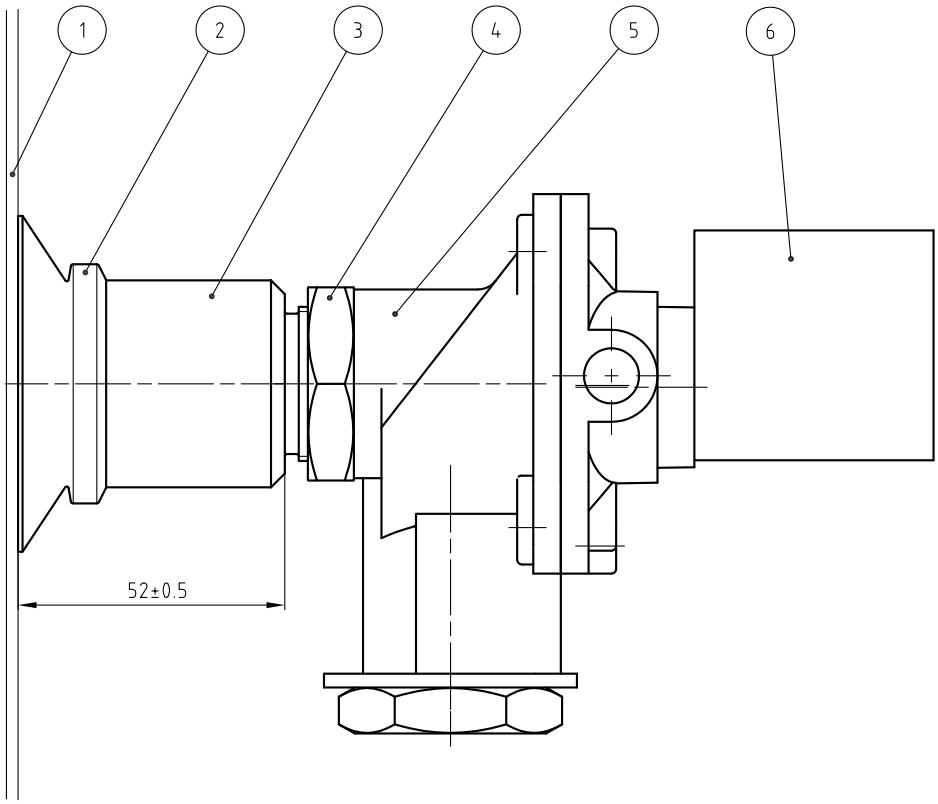

24

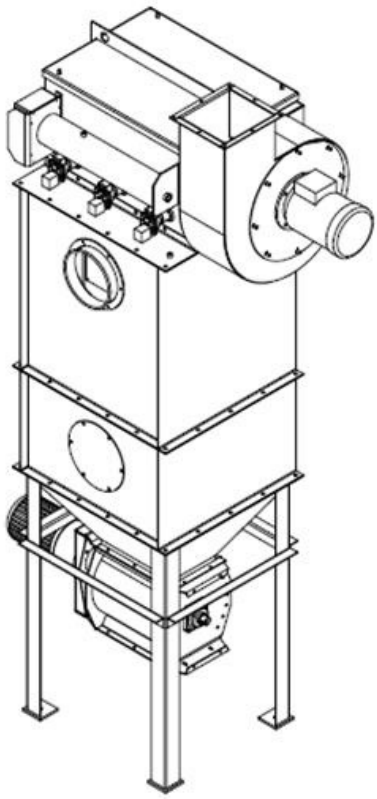

25

MJC Mini

English
Instruction manual

Stationary dust collectors

Cartridge dust collector

MJC Mini

Table of contents

Figures 4

1 Declaration of conformity 55
1.1 Product marking 55

2 Preface 56

3 Notices on hazards 56

4 Safety 56
4.1 General safety precautions 57
4.1.1 Requirements for operation 57
4.1.2 Requirements with regard to qualifications of the personnel 58
4.1.3 Personal protection equipment 58
4.1.4 Repairs and maintenance 59
4.1.5 Emergency situations 60
4.1.6 Prohibited activities 60
4.1.7 Work inside the unit 61
4.1.8 Requirements for workstations located in explosive hazard zones 62

5 Description 63
5.1 General description and intended use 63
5.2 How it works 63
5.3 Technical data 64
5.4 Application in explosion risk zones 66

6 Main components 66
6.1 Accessories 67

7 Before installation 67
7.1 Delivery checks 67
7.2 Handling 68
7.3 Installation requirements 68

8 Installation 69
8.1 Installing the MJC Mini dust collector 69
8.1.1 Installation on site 70
8.1.2 Ductwork connections 70
8.1.3 Electrical connections 71
8.1.4 Compressed air connection 71

9 Using the MJC Mini dust collector 72
9.1 Before start-up 72
9.2 Start-up 73
9.3 Operation 73

10 Maintenance 74

10.1 Maintenance of the MJC Mini dust collector 75
10.1.1 Planned Maintenance 75
10.2 Re-launching after repair 76
10.3 Inspection and replacement of filter cartridges. 76
10.4 Replacement of the fan impeller 77
10.5 Replacement of diaphragm in cleaning valve. 78
10.6 Replacement of solenoid valve coil 78
10.7 Spare parts 79
11 Recycling 80
11.1 Dismantling and disposal 80
12 Troubleshooting 81

1 Declaration of conformity

The formal Declaration is attached to your rotary valve.

1.1 Product marking

The dust collector type MJC Mini is marked according to the following scheme:

MJC Mini AA/BB/C-D

where:

MJC Mini - constant part of the marking which identify the dust collector type according to NEDERMAN product naming system.

AA - one or two digit number which means the approx. value of filter area expressed in **m²**. This is also an unit model (size) identification according to NEDERMAN product naming system.

BB - two letters indicating the filter cartridge size (**22, 40 or 66**) being applied in the dust collector.

C - one digit number indicating the number of rows in which the cartridges are arranged (maks. 3),

D - one digit number indicating the number of filter cartridges being arranged in one row (maks. 2). Therefore, the product of C × D determines the total number of filter cartridges used in the unit.

For instance, **MJC Mini 40/66/3-2** - it is the marking of the MJC Mini dust collector with filter area of **40** m², where **6** cartridges (size 66) in total were arranged in **3** rows, **2** cartridges in each row.

Versions of the product intended for work with dusts which may form potentially explosive atmospheres are specially marked with regard to the provisions of Directive 2014/34/EU. The product marking contains the following:

CE Ex II 1(3)/- D St1

where:

CE - European mark of conformity (French: **C**onformité **E**uropéenne),

Ex - sign indicating that the product is intended for use in potentially explosive atmospheres according to the provisions of Directive **2014/34/EU**,

II - marking of the equipment group,

1 - equipment category marking. Equipment in this category is intended for use in areas in which explosive atmospheres caused by air /dust mixtures are present continuously, for long periods or frequently. Relates to the space inside the hopper and dirty air chamber.

(3) - category of clean air chamber,

/- - no category outside of the equipment,

D - intended for use in explosive atmospheres caused by the presence of combustible dust.

2 Preface

This manual is for the correct installation, use and maintenance of this product. Read it carefully before using this product or carrying out maintenance. Replace the manual immediately if lost.

WARNING: Before any kind of activity, the chapter 4 ' SAFETY 'must be read carefully, and the safety regulations must be strictly adhered to.

This product has been designed to meet the requirements of relevant directives of the European Parliament and the Council. The manufacturer spent many hours to the design and manufacture with a view to ensuring the highest possible performance and safety of the product. To maintain this status, all installation, repair and maintenance work for this product is to be carried out by qualified personnel using only original spare parts. Contact the nearest authorized distributor or NEDERMAN for advice on technical service and obtaining spare parts. Also read Chapter '4 Safety' thoroughly.

Your MJC Mini Cartridge dust collector has been produced by:

NEDERMAN Manufacturing Poland Sp. z o. o.
ul. Okólna 45 A
05-270 Marki, Poland
tel: +48 22 7616000
fax: +48 22 7616099
www.nederman.com

NEDERMAN continuously improves its products' design and efficiency through modifications, and reserves the right to do so without introducing these improvements to previously supplied products. NEDERMAN also reserve the right to, without previous notice, modify data and equipment as well as operating and maintenance instructions.

3 Notices on hazards

All users should be acquainted with the information on the risks, which is provided by the chapters 3 and 4. That information is presented either as a warning, caution or note. See the following examples:

WARNING! Type of injury.
Warnings indicate a potential hazard to the health and safety of personnel, and how that hazard may be avoided.

CAUTION! Type of risk
Cautions indicate a potential hazard to the product but not to personnel, and how that hazard may be avoided.

NOTE! Notes contain other information that is important for personnel.

4 Safety

WARNING! Disregarding NEDERMAN safety regulations entails a heavy safety risk.

NOTE! The user of the product is obliged to check periodically the validity of the following documents, referred to in the present manual: directives, acts, regulations, standards. The manufacturer of the product bears no responsibility

for losses and damages suffered by the user due to application of expired legal acts and standards.

These safety regulations cover safety issues in connection with the installation, operation, inspection and maintenance of any dedusting system in which the dust collector MJC Mini is to be installed, therefore not every topics mentioned in this chapter directly refer to the product delivered.

4.1 General safety precautions

Different precautions are included in the filter system. By using these according to their purpose and by following the safe practice during daily operation, the risk by using the filter system is minimized to the residual risk.

4.1.1 Requirements for operation

WARNING! Explosion risk.
Personnel operating the dust collector is to pay special attention to avoiding discharge of static electricity. The requirements for the safe use and handling of combustible dust is described in the explosion protection document. All personnel is to be informed.

WARNING! Risk of personal injuries.
The outlet silencer and fan may reach high temperatures during normal operation.

WARNING! Risk of eye injuries.
Always stop the unit before looking into the outlet. The fan rotates at high speed and debris and particles coming out of the outlet may cause eye injuries

WARNING! Risk of personal injuries.
Use proper protective equipment when risking exposure to the dust. Wear a protective mask and goggles.

WARNING! Explosion risk.
Possible emission of flames from the relief door during an explosion. The gangway in front of the explosion relief doors must not be used during operation. The gangway must be locked during operation.

Conditions of safe use of the deduster

NOTE. Persons working in the deduster chamber, who remove dust and filtration products, replace the cartridges etc. must use the individual protection means in accordance with the local health and safety rules.

It is necessary to strictly abide the safety instructions given below, in order to avoid the hazard of personal injuries, damages to other property or to the deduster itself.

- Correct grounding system and fully operational.
- Cut-off flap valves in the ducts of the system in full working order (if applicable).
- Metal air ducts grounded at least every 50 m, no less than in two locations. Metal duct segments separated by connectors made of materials, which do not conduct electric current, connected by a conductor with the cross-section area of 2.5 mm^2.
- Cleanliness of the surface around the filter, avoiding deposits of filtration products.

- No heated objects at a temperature >230°C can be located around the filter.
- Foreign bodies, such as large, heavy and hot particles of other materials cannot be fed to dust collectors.
- Periodical inspections (at least once a year), based on: checking of the technical condition of the system and the environmental protection devices, checking the power supply system and the lightning protection system with regard to effective operation of the connections, fixtures, devices for protection against electric shock, resistance of conductor insulation and grounding of systems and apparatuses.

4.1.2 Requirements with regard to qualifications of the personnel

All persons performing works associated with operation of the device (installation, launching, use, assembly and disassembly, regulation, maintenance and renovations) should have the appropriate qualifications in accordance with the local regulations.

Moreover, there is a requirement of confirmation of the qualifications with regard to installation and maintenance of electric devices in accordance with the applicable regulations.

In association with the above, the device operators are not authorized to perform any repair works associated with electrical equipment, if they do not have the authorization to operate devices of this kind. Any anomalies or doubts with regard to the proper operation of electric devices are to be reported to the superior.

4.1.3 Personal protection equipment

WARNING! Risk of personal injuries.
Use proper protective equipment when risking exposure to the dust. Wear a protective mask and goggles

Performing the works associated with maintenance of the dust collectors which work in an explosion hazard area, it is necessary to use:

- Respiratory protective equipment, preferably with fresh air supply
- Protective goggles
- Fireproof and dust proof clothes, preferably made of anti-electrostatic materials
- Fireproof working gloves
- Protective shoes
- Non-sparking tools

NOTE. The personal protection equipment should be provided with appropriate certificates.

NOTE. In case of work in dedusters placed on silos or at a height, it may be necessary to use a safety harness with a protective rope and shock absorber (to absorb energy and mitigate the consequences of a fall).

4.1.4 Repairs and maintenance

NOTE. It is necessary to strictly abide the safety instructions given below, in order to avoid the hazard of personal injuries, damages to the device itself and to the other property.

WARNING! Explosion risk.
Stop operation and clean the entire filter thoroughly from dust before any grinding, welding or other works generating the heat are performed on the dedusting system exterior.

WARNING! Risk of electric shock.
Prior to commencement of any works, it is necessary to cut of the power supply by switching the main switch of the dedusting system to position 0 - „ **OFF** ” and lock it in this position in order to avoid accidental switching on by any unauthorized person. It is also necessary to provide a warning sign / label “**Breakdown – do not turn on!**”

WARNING! Risk of electric shock.
Work with electric equipment is to be carried out by a qualified electrician. National and local electric regulations are to be followed.

WARNING! Risk of personal injuries.
Always use proper lifting and protective equipment.

- Service and repair may be performed by specially trained staff only.
- Use a non-sparking tools.
- In the filter housing or the ducts, holes may be drilled after stopping the filter and removing dust. These activities are to be performed in a manner preventing generation of heat.
- During maintenance or repairs in dusty air inside the filter, use personal protective equipment.
- Inspections through open covers should be performed in protective clothes.
- If the device is cleaned using a vacuum cleaner, ensure the discharge of static electricity from the suction nozzle.
- If there is a breakdown in the power supply system, do not remove or bypass the damaged component and do not attempt to start-up the dust collector. Prior to turning it on, it is necessary to identify the defect and conduct a repair (including replacement of a defective component).
- Removal of worn components and parts, as well as other waste, should be performed in accordance with the plant regulations for waste management (with regard to the environmental protection).
- The workplace should be additionally equipped with a dry chemical extinguisher and a fire blanket.
- Maintenance works cannot be commenced prior to full turning off of the filter and safe cut-off of the power supply. Inspections of the dumping hopper of the dust collector is possible 15 minutes after turning off the device.
- Use **Ex** marked lighting fixtures.
- It is prohibited to operate during atmospheric discharges, if the device is installed outdoors.

- For disassembly of heavy subassemblies, use crane equipment with a valid supervision certificate of the local authorities and certified lifting slings.

During work at height:

Prior to commencement of works, check the technical conditions of the structure or the equipment, on which the works are to be performed, including their stability, resistance to the expected load and protection against unexpected change of position, as well as the technical condition of the fixed components of the filter, which are to be used for fixing of the safety ropes.

If a movable ladder is used for the work, it must be secured correctly for stability before commencing the work.

Ensure use by the employees of appropriate equipment, adapted to the type of works performed, to secure them against fall, such as:

- harness with a safety rope and a shock absorber, fixed to the permanent components of the filter structure,
- protective helmets for performance of works at heights.

4.1.5 Emergency situations

In the case of a fire, explosion, electric shock or any other emergency or accident:

- Shut-down the system using the emergency switch.
- Proceed strictly in accordance with a binding plant procedure.

Prior to re-launching the dust collector or opening the doors / covers of access holes, it is necessary to make sure there is no fire inside the filter. That may be done by:

- Checking the opening status of the fire protection flap valves in the system ducts (if applicable).
- Checking the alarm signals in the control cabinet (if applicable).

4.1.6 Prohibited activities

It is prohibited to:

- Perform any works prior to getting familiar with the present manual.
- Launch the system while all valves (dampers) are closed.
- Approach the system at a distance closer than 3 meters with open fire, sparking or some other form of heat generation such as: welding, grinding, drilling or smoking, etc., especially when dust collector operates with an explosive atmosphere, such as dust laden air.
- Enter the safety exclusion zone in front of the explosion vents when the system is in operation.
- Use of devices which may generate sparks or collect the static electricity
- Perform any mechanical, electrical repairs during operation of the dust collector and change the set values in regulation and protective devices.
- Enter the upper cover during operation of the system.
- Open the covers of the filter access holes in the case of a fire.

- Use non-certified lifting slings for assembly/disassembly of the system components.
- Cleaning, putting on and taking off clothes in the marked explosion hazard zones, as well as wearing unbuttoned clothes.
- Mounting of other than original replacement parts, and, where applicable, components not to be used in explosion hazard zones.
- Introduction of structural changes in the dust collector.
- Arbitrary change of set values of programmable controllers without consultation with the product supplier or manufacturer.
- Performance of works with devices located outdoors during atmospheric discharges.
- Removal of covers of access holes during operation of the system and within 15 minutes after stopping of the dust collector.
- Collecting the material that may damage the filter cartridge, such as metal parts with sharp edges, fluids, hot particles etc. It is strictly prohibited to collect material that may undergo dangerous chemical or thermal reactions and/or self-ignite.

4.1.7 Work inside the unit

WARNING! Risk of personal injuries.
Use proper protective equipment when risking exposure to the dust. Wear a protective mask and goggles.

WARNING! Explosion risk.
Stop operation and clean the entire filter thoroughly from dust before any grinding, welding or other works generating the heat are performed on the filter exterior.

WARNING! Explosion risk.
Personnel operating the dust collector is to pay special attention to avoiding discharge of static electricity. The requirements for the safe use and handling of combustible dust is described in the explosion protection document. All personnel is to be informed.

- It is prohibited to open the service door, disconnect the container for the filtration products and to commence works inside the deduster after less than 15 minutes (necessary for dust to fall down) after the deduster is shut down.
- Before opening the service door and covers of the inspection holes in the deduster and ducts, it is necessary to perform the filter cartridge cleaning operation, and then to turn off the unit with the master switch and secure it against accidental turning on.
- Before maintenance and repairs, the interior should be cleaned and the filtration products should be removed. It is compulsory to empty the solid matter contained in the devices before entering them (if necessary, tear down the banks and agglomerations of suspended matter).
- Maintenance workers must be equipped with the appropriate individual safety equipment according to occupational health and safety rules.
- In case of dedusters working at high temperatures, no works can be commenced before the deduster cools down to the level of ambient temperature.

Persons working in the deduster chamber, who remove dust and filtration products, clean the ducts etc. must use the individual protection means in accordance with the occupational health and safety rules:

- Respiratory protective device, possibly with fresh air supply.
- Goggles, possibly a screen mask in connection with fresh air supply.
- Fire-retardant suit.
- Fire-retardant working gloves.
- Safety footwear.
- Safety helmet.
- Non-sparking tools wherever possible

4.1.8 Requirements for workstations located in explosive hazard zones

NOTE! To minimize any secondary explosion damage and spread of fire, the proper documentation and checklists of how to handle a fire in the unit has to be developed. Such documents are to be developed in co-operation with the local fire authorities, and take into account the properties of the collected material.

The user of the device (the employer) should prepare a documented procedure for protection of a workstation against explosion and update it periodically in accordance with the provisions of Directive 1999/92/EC (ATEX137).

The document should be prepared prior to approval of a workstation for operation.

At places specified in the above document, works are to be performed in accordance with the written instructions, rendered available to the employees by the employer. Works performed in explosion hazard zones, which are not taken into account in the instructions, require a written permission as specified by the employer.

The employer should provide the employees with the proper personal protection equipment made of materials, which will not cause electrostatic discharges, which could result in initiation of ignition of the explosive atmosphere.

It is absolutely required to comply with the prohibition to:

- Commence or continue work upon finding any problems with operation of the equipment, which may lead to overheating, sparking etc.
- Use of open fire (including tobacco smoking), objects of temperature >230°C inside the filter and the designated zone of 3 m around the device, as well as use of other sources of heat or sparking, such as welding, grinding, drilling etc.
- Use of devices or objects resulting in emergence of static electricity,
- Commencement of work in clothes that become charged with electricity,
- Storage of combustible materials in the defined zone of 3 m near the device,
- Installing of temporary power connections and performance of repairs of the power supply systems by persons, who are not adequately certified,

- Constant presence of persons and conducting of works by unauthorized employees within the designated pressure discharge zone (near the explosion relief membranes).
- Limiting of access to fire protection equipment, electric current distribution boards and switches.

Moreover:

- It is necessary to remove dust systematically from the exterior surfaces of the device.

5 Description

5.1 General description and intended use

The MJC Mini is a range of dedusters incorporating the tubular filter cartridges with reverse jet cleaning designed to separate dry dust from air and certain gas streams and to collect the dusty material or return it to the process. They are designed for continuous use.

Wide range of filter media is available to suit various applications.

Free standing dust collection units, incorporating hoppers and discharge or collection devices are normally provided with supports that should be securely fixed to the ground or floor.

Optional versions available:

- Open base venting unit with mounting flange at base of dirty air chamber,
- Insertable venting unit with mounting flange at base of clean air chamber.

All MJC Mini units have generously sized integral pre-separation chambers to increase their dust load capacity whilst reducing the load on the filter cartridges.

Units may be supplied with a fan fixed to one side of the clean air chamber, or with a prepared outlet spigot.

Apart from the standard MJC Mini dedusters, adequately designed special versions are intended for extraction of combustible dusts, which in mixture with the air may form explosive atmospheres inside the machinery - see Chapter 5.4.

5.2 How it works

Normal operation

1. During normal operation, the dust laden air from the plant being dedusted travels down the supply duct and enters the dust collector through the inlet spigot [1] - see Fig. 7.
2. A vertical slotted baffle [2] separates the inlet section that slows the airstream and directs dust downward into the hopper [3], protecting the cartridges [6] from direct abrasion but allowing air to pass horizontally between the cartridges.
3. The lighter dust collects on the outside of the tubular cartridge [6] as clean air passes inside of the cage to the clean air chamber. The clean air then

travels through the air handling fan [5] where it can be returned to the workshop / plant or exhausted outdoors.

4. The heavier dust settles in the hopper section [3] where it can be discharged into a metal bin [7] or through a rotary valve (air lock).

Cleaning

1. The MJC Mini dust collector can utilize an electronic cleaning driver with to control the compressed air jet cleaning. On demand the cleaning system may be equipped with pressure differential gauge (so called delta-p sensor). In essence, the system cleans the cartridges when they need to.
2. A compressed air supply line must be connected to the female coupler located at the end of the compressed air manifold [8] - see Fig. 8.
3. A solenoid valve opens to allow compressed air from the manifold into the jet tubes [9]. The jet tubes are aligned above each row of filter cartridges.
4. The downward blast [10] blows the dust off the tubular filter cartridges (from the inside out) [4] where it settles into the hopper section to be collected in the metal bin [7] or discharged through a rotary valve (air lock).

5.3 Technical data

MJC Mini dust collectors can purify gases, in which the dust concentration does not exceed the value of **50** g/m^3.

Filter areas range from **4** m² to **40** m² as standard.

MJC Mini units may be fitted with space saving integral (detachable) high efficiency radial fans - see Tab. 5-1 for details and Fig. 6 for their performance curves. a **4.0** kW fan may be delivered as a special option.

Air flow range from **500** m^3/h up to **3500** m^3/h.

NOTE! Do not exceed the allowable operating parameters of the product. The ranges of these parameters are specified in the order. The manufacturer of the product bears no responsibility for damages suffered due to exceeding by the user the allowable operating parameters of the product.

Table 5-1: Technical data of MJC Mini dust collectors

Pos.	Deduster modell, MJC Mini ..	Filter area [m²]	Number of cartridges	Fan motor power [kW]
1	4/22/2-1	4	2	1.1
2	8/40/2-1	8	2	1.1
3	9/22/2-2	9	4	1.1
4	13/22/3-2	13	6	2.2
5	16/40/2-2	16	4	2.2
6	24/40/3-2	24	6	3.0
7	26/66/2-2	26	4	3.0
8	40/66/3-2	40	6	4.0

Table 5-2: MJC Mini dust collector - noise level

Fan motor power [kW]	Noise level dB(A)*	
	with silencer	without silencer
0,75	68	82
1,1	68	82
2,2	75	83
3,0	77	85
4,0	77	85

* Max. value in a distance of 1 m and a height of 1 m; one reflection plane.

Allowable pressure and temperature ranges

MJC Mini dust collectors are designed for negative or positive pressure use - see Tab. 5-2 for allowable values as well as for temperature allowable ranges.

Table 5-3: Allowable pressure and temperature ranges of MJC Mini

Unit version	Max. positive pressure [Pa]	Max. negaitive pressure [Pa]	Dirty gas temperature range [°C]	Ambient temperature range [°C]
Standard	2000	8000	-20 ÷ +80	-20 ÷ +40

Dimensions and masses

Dimensions of different MJC Mini dust collector models are presented on Fig. **10** up to **13**.

Their masses (excluding fans) are presented in Tab. 5-3. Masses of equipment elements (fans, silencers) are presented in Tab. 5-4.

Dimensions of filter cartridges are presented in Table 5-5.

Table 5-4: MJC Mini masses [kg] – excluding fans

Deduster modell, MJC Mini ..	Insertable version	Open base version	Small dust bin version	Version with hopper and dust bin
13/22/3-2	102	146	184	196
24/40/3-2	108	178	216	228
40/66/3-2	114	215	253	265
9/22/2-2	83	120	-	151
16/40/2-2	87	145	-	176
26/66/2-2	91	175	-	206
4/22/2-1	37	58	90	121
8/40/2-1	39	74	111	142

Table 5-5: MJC Mini dust collectors - masses of equipment [kg]

Equipment	Mass [kg]
Fan 3,0 kW	53
Fan 2,2 kW	46
Fan 1,1 kW	40
Fan 0,75 kW	38
Fan silencer	12
Silencer weather cowl	1,5
Dust bin balance system	2

Table 5-6: MJC Mini dust collectors - cartridges main data

Cartridge size	Nominal length [mm]	Filter area [m²]
22	505	2.2
40	850	4.0
66	1400	6.6

5.4 Application in explosion risk zones

Standard design of the MJC Mini deduster does not allow for use in the case of gases that make up explosive mixtures with dust, or for installation in explosion risk zones. In case of processes, in which dust leading to creation of explosive mixtures is generated, adequately designed special versions are intended for extraction of combustible dusts, which form explosive atmospheres inside the machinery. Such design of MJC Mini itself ensures the sufficient level of protection against the consequences of an explosion, which may occur inside the unit body. These dedusters are designed for extraction of flammable dust, which forms explosive atmosphere inside the device (dirty air chamber and the hopper of the unit) continuously, for long periods or often (**zone 20**).

Protection against uncontrolled destruction, in the event of dust explosion, is provided by one or more, pressure relief bursting membranes fitted to the unit. The size of each explosion vent varies according to the **St** rating of the dust for which the filter is designed and it also depends on a volume of the filter chamber itself. a limited amount of venting will also occur through the extract fan and silencer.

The required explosion ventilation area is based upon the explosion strength of the vessel (p_{red}) and its volume (V). This data is linked with the explosibility of the dust (K_{st}), the maximum possible explosion pressure for the dust and the maximum release pressure for the ventilation device. This data is combined in the calculations used to determine the area of the ventilation panels.

Significant amounts of flame may be emitted from the explosion vent and from the air outlet and, in severe cases, the filter unit may be rendered unusable, but there is no significant emission of flame from unpredicted points on the enclosure and there is no flying debris.

6 Main components

NEDERMAN continuously improves the products and their efficiency through the introduction of design modifications. We reserve the right to do this without introducing these improvements on previously supplied products. We also reserve the right, without previous notice, to modify data and equipment, as well as operating and maintenance instructions.

The device consists of a number of components, which assembled together compose its entire construction. The main structural components are typically made of steel sheets and steel profiles of standard constructional grade which are protected against corrosion by means of protective paint systems suitable for an expected type of environment. Where it is needed, connections / joints between the adjacent components are sealed with appropriate materials.

The MJC Mini dust collector consists of the following main sub-assemblies (see Fig. 9):

Table 6-1: Main components of the MJC Mini dust collector

Pos.*	Component	Remarks
1	Dust collecting bin	With quick release clamp system for dust collecting bin
2	Pyramid hopper with supporting structure	
3	Dirty air chamber - DAC 2 (lower part)	
4	Dirty air chamber - DAC 1 (upper part)	
5	Detachable radial fan	Power 0.75 kW up to 3.0 kW (optionally 4.0 kW)
6	Fan silencer	Version with weather cowl shown
7	Clean air chamber - CAC	With top removal access lid, standard access to CAC, top removal of cartridges
8	Cleaning system controller	
9	Cartridge cleaning assembly	Pressured air manifold with diaphragm valves, solenoid valves, jet tubes
10	Dirty air inlet spigot (Flanged inlet section)	QF version (**q**uick **r**elease) shown
11	Deflector baffle	
12	Filter cartridge (size: 22, 40 or 66)	Inside the DAC, not shown on Fig. 9
13	Explosion vent	With bursting membrane, for use with combustible dusts, not shown on Fig. 9

* Position No. on Fig. 9

6.1 Accessories

Table 6-2: List of optional accessories for MJC Mini dust collector

Pos.	Accesory	Remarks
1	Detachable radial fan	Power 0.75 kW up to 4.0 kW, see Table 5-1
2	Rotary valve	Type NRS or NRSZ as a discharge device - see Fig.24
3	Secondary filter assembly	F7 or H13 available - see Fig. 25
6	Double flap valve	Optionally with Big Cartridge holder
7	Explosion relief panel	Type depends on St class, optional deflector
10	Fan mounted silencer	Optionally with weather cowl
12	Control cabinet (fan starter)	Two versions: basic and dp-alarm

Pos.	Accesory	Remarks
15	Explosion safety switch	Detection of an opening / bursting the explosion membrane
16	Differential pressure indicator	Analogue read-out

7 Before installation

WARNING: Before any kind of activity, the Chapter 4 ”SAFETY” must be read carefully, and the safety regulations must be strictly adhered to.

7.1 Delivery checks

Check the unit for any transport damage. In case of damage or parts missing, notify the carrier and your local NEDERMAN representative immediately.

7.2 Handling

WARNING! Risk of personal injuries.
The risk of being crushed by falling objects. Take special care when lifting, lowering and moving the device or its parts.
Always use proper lifting and protective equipment.

WARNING! Risk of tipping.
Consider the centre of gravity of the device and attachments during transport.

Normally the MJC Mini dust collector is delivered in one part (completely mounted) being prepared for location at the customer site. Bigger units may be delivered and handled partially assembled with a bolted joint between the filter clean air chamber (CAC) and dirty air chamber (DAC) including the fan attached but with the hopper separated.

Usually deduster parts are packed on a wooden pallets. Transport can be carried out using normal pallet handling equipment (fork lift). When using a crane lift, the lifting strap must be fastened carefully using at least two flange holes at each end.

For smaller objects use only the fixed lugs or lifting eyes provided.

Despatch may be effected by all means of transport normally used. For sea carriage, supplementary protection should be considered.

7.3 Installation requirements

The MJC Mini dust collector should be positioned in accordance with the legal provisions on positioning of machines, taking into account the space needed for the device operation, opening of the inspection door, providing power supply connections etc. The appropriate data is contained in the standard **EN 547-1**: *Machines - Safety –Dimensions of the human body - Rules of determination of the dimensions allowing access of the entire body to the machine.*

The MJC Mini dust collector is to be placed on a supporting structure of suitable capacity, adapted to its mass, and (if applicable) taking into account the additional load associated with atmospheric conditions (snowfall, wind).

Open base or fully insertable units should be sealed and securely fixed to the vessel to be ventilated.

NOTE! All metal parts of the unit are to be grounded. The system must have two independent ground connections; one on the unit and the other one on the duct system.

Guidance on siting filter units fitted with explosion relief panels

NOTE. Units fitted with explosion panels must always be securely fixed to their foundations.

Particular care should be taken when siting a filter fitted with an explosion relief panel so that it complies with national regulations. The relief panels must be free to open with no obstructions. a safety exclusion zone outside the relief panel must be established and respectively marked.

The minimum distance for safety L may possibly be assessed according to **EN 14491**: *Dust explosion venting protective systems.*

Safety exclusion zone outside the relief panel must be marked with standard warning signs **Ex**.

This is accepted and valid for most common situations. However expert advice should be sought if there is any doubt, so contact your nearest NEDERMAN representative if needed.

WARNING! Explosion risk
Possible emission of flames from the relief door during an explosion. The gangway in front of the explosion relief doors should be respectively marked and must not be used during operation. The gangway must be locked during operation.

Unit located outdoors

It is always recommended to place dust collector units outdoors when they are fitted with explosion relief ventilation panels. Unless it is technically impossible, this is the preferred location.

NOTE. a safe area should be established in front of the explosion vents if these discharge horizontally.

Unit located indoors

If this is unavoidable, then the dust explosion may be ventilated through a short duct (less than 1 metre) to a safe area outside. Longer ducts or bends should be avoided because of adverse affects in the filter. NEDERMAN should be contacted for advice for any ducted explosion relief proposal.

NOTE. a safe area should be established in front of the explosion vents / ducts if these discharge horizontally.

The final position of a filter fitted with explosion ventilation should be decided following a careful risk assessment performed by the user. The key risks arise from the emerging combustive dust cloud causing direct damage to people and property, plus the risk of a secondary explosion or fire.

WARNING! Secondary explosion risk
If an explosion is ventilated within a building there is an enhanced risk of a secondary explosion occurring, caused by the pressure wave from the primary explosion dislodging dust from walls, beams and other surfaces. The result of such a secondary explosion could be catastrophic.

8 Installation

NOTE. Installation should be performed only by suitably qualified and experienced personnel.

WARNING! Risk of personal injuries.
The risk of being crushed by falling objects. Take special care when lifting, lowering and moving the device or its parts.
Always use proper lifting and protective equipment.

8.1 Installing the MJC Mini dust collector

NOTE! Assembly and initial starting of the device shall be carried out by trained, experienced personnel only as any errors may cause damage and reduce product life considerably.

Read this guide carefully before commencing any work.

8.1.1 Installation on site

NOTE! Mechanical and electrical installation should be performed only by suitably qualified and experienced personnel.

A firm horizontal location should be used that will support the unit taking into account all dead and imposed loads. Free standing units should be mechanically fixed to the floor / ground, whilst ensuring that there is sufficient space for access and maintenance.

Units with the standard base units and quick release bin may be free standing or secured as appropriate.

Open based units should be sealed and securely bolted to a prepared flange on top of the vessel or housing to be ventilated. a suitable gasket or tube sealant material should be applied inboard of the base flange holes before bolting in place, to prevent leakage during normal use.

If the hopper is supplied as a separate item, lift into position with a suitable crane or forklift onto the prepared base. Securely bolt to the foundations or floor as appropriate.

NOTE. Units fitted with explosion panels must always be securely fixed to their foundations.

Unit assembly

For units delivered as separate assemblies, proceed as follows:

1. Lift the hopper into its prepared position and bolt securely into place using prepared fixings.
2. If supplied as separate assemblies, the clean air and dirty air chambers should first be bolted together after applying sealant to the mating flange.
3. Place the assembled filter onto the hopper after applying sealant to the mating flange and bolt securely together.

8.1.2 Ductwork connections

Ducted inlet

The dirty air inlet is at the top of the pre-separation chamber (see Fig. 9, pos. 10). The duct connection is made to a round flange by means of QF clamp or bolts (in case of bolted flange). The size of the flange will suit the airflow volume handled by the filter.

Ducted outlet

A clean air fan from 0.75 up to 4.0 kW may be directly mounted on the front of the clean air chamber. It may be fitted with an air silencer and weather cowl as shown on Fig. 9. a flange for external ducting may be fitted in place of the weather cowl.

NOTE! All metal parts of the unit are to be grounded. The system must have two independent ground connections; one on the unit and the other one on the duct system.

8.1.3 Electrical connections

WARNING! Risk of electric shock.
Work with electric equipment is to be carried out by a qualified electrician. Prior to commencement of any works, it is necessary to cut of the power supply by switching the main switch of the dedusting system to position 0 - „ **OFF** ” and lock it in this position in order to avoid accidental switching on. . It is also necessary to provide a sign “Breakdown – do not turn on!”

If a fan is fitted, connections should be made directly to the motor terminal box. The fan motor may be up to 3.0 kW (4.0 kW special option). The fan case is fixed rigidly to the filter body. The fan motor should be supplied via a suitable starter, such as NEDERMAN type M1.

The MJC Mini dust collector is normally fitted with a cleaning system controller.

Please refer to separate controller manual for this item.

REMARK. The electric installation will normally include a fan and may also have motorised dust discharge devices, such as rotary valves and screw conveyors. Ensure that the normal running controls prevent the fan from running until the discharge devices are energised. If the reverse jet control “after-clean” mode is used, then the discharge devices should remain energised during the after-cleaning period.

If the filter is operating on a process and is situated in an unmanned or remote location, then it would be wise to make use of the differential pressure alarm connection in the controller, to indicate in a prominent place if the filter differential pressure increases unduly.

8.1.4 Compressed air connection

There will normally be one connection point for compressed air to operate the reverse jet cleaning system. It is good practice to fit a combined oil / water separator and pressure regulator in the supply line. The compressed air should be dry and must be free from oil. Its quality must be of Class 2 according to standard **ISO 8573-1:** *Compressed air - Part 1: Contaminants and purity classes*. For details see Table 8-1.

ISO 8573-1 provides general information about contaminants in compressed-air systems as well as links to the other parts of ISO 8573, either for the measurement of compressed air purity or the specification of compressed-air purity requirements.

Table 8-1: Compressed air - purity classes according to ISO 8573-1

Purity class	Maximum permitted content in 1 m³				
	Solid particles		Oil	Moisture	
	[µm]	[mg/m³]	[mg/m³]	dew point [°C]	[mg/m³]
1	0.1	0.1	0.01	-70	0.003
2	**1**	**1**	**0.1**	**-40**	**0.4**
3	5	5	1	-20	0.88
4	15	8	5	+3	6.0
5	40	10	25	+7	7.8
6	-	-	-	+10	9.4

The connection will normally be a female **¾" BSP**.

Normal operating pressure is 5.0 to 5.5 bar. To protect the filter cartridges, do not exceed 5.5 bar. Higher pressures will add undue stress without enhancing the cleaning efficiency. The system compressed air capacity should be sufficient to allow the manifold to regain its pressure after a pulse within ten seconds.

NOTE. The MJC Mini 4/22/21 and 8/40/21 units have no tank, simply a pipe connection. These units are supplied with a flexible pipe with a ¾"BSP connection to facilitate access for maintenance. The compressed air system should have the capacity to operate the filter reverse jet cleaning system.

Consumption of the compressed air depends on a number of cleaning valves used - see Table 8-2.

Table 8-2: Compressed air consumption

Number of valves - number of cartridges in one row	Max. consumption [Nm³/h]
2-1	3.0
2-2	3.6
3-2	5.4

9 Using the MJC Mini dust collector

9.1 Before start-up

NOTE! Before any kind of activity, the chapter 4 'SAFETY' must be read carefully, and the safety predictions must be strictly adhered to.

NOTE! To minimize any secondary explosion damage and spread of fire, the proper documentation and checklists of how to handle a fire in the unit has to be developed. Such documents are to be developed in co-operation with the local fire authorities, and take into account the properties of the collected material.

Inspection before first start

- Check that ductwork connections are correct and tight.
- If there is a main volume control damper, set this half closed to limit the initial airflow volume.
- Check that the filter cartridges are correctly fitted and that all jet tubes are firmly fixed in place.
- Check that all access and inspection doors / covers are closed.
- Check the compressed air pressure and adjust if necessary.
- Energise the fan briefly to check for correct direction of rotation.

9.2 Start-up

First start

- Energise the main control supply and set the appropriate parameter values on the cleaning system controller. This will allow the reverse jet cleaning to run continuously.
- Run the fan. Ensure quiet smooth running with no parts rubbing. Check that the fan operation is smooth. Measure the fan motor current and check this against the motor full load current. If the current is too high, stop the fan immediately and refer to the fault-finding section in Chapter 12.
- Listen to each diaphragm valve in turn. The release of air when pulsing should be equally strong for each valve. There should be no sound of continuous leakage and the manifold pressure should recover within ten seconds.
- Check the smooth operation of any rotary valve (if mounted), or other motorised device.
- Before allowing process dust into the system, commission the system to operate with the design airflow volume.
- After a period of free running, visually check for tightness of connections and smooth operation.
- Stop the system using the normal operational “STOP” control. Observe that the correct specified sequence to shut down occurs. Note particularly the operation of the filter “AFTER-CLEAN” procedure, if used.
  Note! Whenever possible make use of the automatic after-clean function. This will give enhanced efficiency cleaning after the main fan has stopped.

The system is now ready to be put to work. Before final commissioning the system should be allowed to run for a while to enable the filter cartridges to become conditioned with dust. This will give a more stable condition for commissioning.

9.3 Operation

NOTE! Before commencement of operation of the MJC Mini deduster, the staff must get familiar with the safety predictions described in the Chapter 4 of the present Instruction Manual. Regulation of power control must be performed only by authorized persons.

NOTE! a failure to observe the requirements of the safety instruction may lead to a serious accident!

NOTE! Before turning on the dedusting system, all doors, inspection hole covers and safety devices must be locked permanently.

Introduction

It is assumed now that the installation is complete and the filter unit and associated equipment have been commissioned and are ready for normal operation.

Typical operation – continuous cleaning

In this mode the reverse jet cleaning will start with the main fan. Cleaning pulses will occur at regular intervals until the plant is shut down.

Typical operation – after clean function

This function enables the reverse jet cleaning to operate for an adjustable time after the process and main fan have stopped. This function should be used if the process is not totally continuous. a signal from the fan starter, when the fan is de-energised will initiate the after clean period.

Dust collection bins

When the installation is new, the bins should be checked regularly and emptied before overfilling. If there is a shut-off damper above the bin, this should be closed before removing the bin. This will allow the filter to remain in operation during emptying. This damper must be opened again when the bin has been replaced to prevent material accumulating in the hopper.

With experience typical filling time for the bins will become known.

The hopper is designed for dust separation; it is not to be used as a storage vessel for material. If a level of dust is allowed to accumulate in the hopper, the efficiency of the filter will be affected by re-entrainment of dust from the surface, artificially increasing the dust burden of the unit.

Bins may be used with plastic liners if the “bin-balance” option is fitted. a flexible pipe connects the steel bin to the clean air chamber of the filter, to prevent the plastic liner being drawn up into the hopper when the fan is running. Please note, however, that if this pipe is connected, then a bin liner must be used, otherwise dust will be drawn directly into the clean air chamber.

Discharge by means of rotary valve or other device

Larger filters, or those handling higher dust loads are likely to have a method for continuous discharge of dust, such as a rotary valve or motorised flap valve.

It is important to ensure that the discharge device is energised when the main fan starts, to prevent dust building up in the hopper. If the dust is then directed into a conveyor, its controls should be linked to the discharge device to ensure that the complete dust discharge / transport system operates as one machine.

If the after clean function is utilised, the discharge devices should remain energised until the end of the after clean time period. This is to prevent dust building in the hopper.

Operation of fan

On most systems the air handling fan is on the clean air side of the filter. The fan impellers, usually of the backward curved blade type, are designed to run in clean air. If run in dusty air they may start to vibrate as a result of dust building on the blades causing out of balance forces. The cause of this would normally be a broken cartridge (see later fault location chart). Do not allow the fan to run out of balance as serious damage may result.

10 Maintenance

WARNING! Before any kind of activity, the Chapter 4 - SAFETY must be read carefully, and the safety regulations must be strictly adhered to.

NOTE! a failure to observe the requirements of the safety instruction may lead to a serious accident!

NOTE! NEDERMAN company warrants the proper and safe functioning of the device only in case of use of original spare parts for repairs.

NOTE! Prior to start any actions make sure it is safe. Protect always power supply conductors and compressed air service, before executing any repair works. All actions should be compliant with the regulations of occupational health and safety.

NOTE! During the warranty period, NEDERMAN must be notified of all abnormalities in functioning of the deduster.

10.1 Maintenance of the MJC Mini dust collector

Introduction

Regular professional quality service and maintenance are the key to trouble free operation. Only original NEDERMAN spare parts should be used during scheduled maintenance and for repairs. The service intervals are given for guidance only. The severity of duty should be taken into account when planning service and maintenance schedules.

NOTE! The plant must be completely stopped and the electrical supply isolated in accordance with electrical regulations before commencing service work.

NOTE! Similarly, the compressed air supply should be isolated and the air manifold drain tap opened to release the pressure.

On completion of work a safety inspection of covers, guards etc. should be made before removing the isolation and energising the equipment.

Filter Housing

The filter housing is made from painted cold reduced sheet steel. No maintenance other than normal cleaning should be required.

Integral Fan

The fan impeller has been balanced at the factory in order to ensure smooth running. If vibration develops during normal operation, dust deposits on the impeller will be the most likely cause. Therefore after cleaning the impeller the vibration should cease. If the vibration continues, the impeller should be

removed and re-balanced. We recommend that the NEDERMAN Service Dept. should be contacted.

Fan Motor

Standard motors are maintenance free. See a separate motor manual if the motor is non-standard, or particularly large.

Reverse jet controller

The solid state reverse jet controller contains no serviceable parts. Please see the separate reverse jet controller manual (typically type RM-BV) to check or make changes to settings.

10.1.1 Planned Maintenance

The MJC Mini Cartridge dust collector and fan should be serviced at the intervals stated below (see Table 10-1).

Other associated items such as rotary valve, conveyor and electrical control panels should also be serviced according to their requirements. All motors should be checked for general condition.

If wear or damage is found, the defective parts should be replaced as soon as possible. Any safety hazards arising from continued operation should be assessed.

NOTE! Use only original NEDERMAN spare parts.

Table 10-1: Maintenanse recommended intervals.

No.	Activity	Recommended intervals	
		Months	Operating hours
1	Empty all waste containers.	Daily or as required	
2	Check filter differential pressure.	Daily when starting	
3	Check compressed air pressure.	Daily when starting	
4	Check operation of cleaning valves.	Daily by listening	
5	Check that no dust emerges from the filter / fan outlet.	Daily	
6	Check operation of discharge devices.	Daily	
7	Check that the entire filter is cleaned by listening to each diaphragm valve operating in turn.	1	300
8	Check fan case for signs of wear and corrosion.	6	1000
9	Check ducts and pipework for wear and leakage.	3	500
10	Check electrical connections including earth bonding.	6	1000
11	Check fan motor cooling fan for operation free from obstruction.	6	
12	Check filter and hopper casing for wear, corrosion and accumulated material sticking to sides.	6	1000
13	Check filter cartridges for wear and leakage.	6	1000
14	Check dampers and control valves for function and wear	6	1000
15	Check tightness of all flange connections.	6	1000
16	Check secondary filters if fitted; inspect seals; clean or replace elements as appropriate.	1	300
17	Test electrical safety functions, e.g. Emergency switches.	6	1000
18	Check after cleaning function (where used).	1	300
19	Clean controller on the outside by means of a moist cloth.	1	300

No.	Activity	Recommended intervals	
		Months	Operating hours
20	Check clean-on-demand function. Check ON and OFF pressure settings in controller.	1	300

10.2 Re-launching after repair

Launch in accordance with the normal start-up procedure, paying particular attention to the process. Control the proper functioning of the components of the installation, which have been fixed or regulated. In case if the defect is still observed, shut down the installation immediately.

10.3 Inspection and replacement of filter cartridges.

NOTE! Before commencing work, isolate the electrical and compressed air supplies, using procedures in accordance with national safety regulations. Use suitable protective clothing and equipment, according to the material filtered.

REMARK. Normal maintenance is from the top, within handrails if specified, but cartridge changing may be specified from the side, if headroom does not allow top access.

Before replacing a cartridge, check for signs of wear or abrasion or degradation, for example by hydrolysis. If any damage is found, the cartridge should be replaced by a new one. Look for any signs of damage to the cage and check that it has no sharp edges that may damage the cartridge.

Ensure that the correct filter cartridges are used for replacement. Other aftermarket cartridges may cause unexpected malfunction.

All units except MJC Mini 4/22/21 and MJC Mini 8/40/21

1) Remove the nuts securing the lid and lift off the lid, putting it in a safe position.
2) Unscrew knobs securing jet tubes and withdraw jet tubes from socket.
3) Unscrew and remove the knobs and washers from the cartridge clamping plates. Remove the clamping plates.
4) Withdraw the cartridges, shaking them first before extracting to remove excess loose material.
   NOTE! You are strongly advised to replace the black cartridge sealing ring before re-fitting a cartridge.

Before replacing the cartridges, clean the area around the cartridge sealing ring location. Insert the cartridges carefully. Locate the cartridge clamping plates and screw down the clamping plate knobs firmly but evenly by hand. Do not overtighten by using a tool. Then replace jet tubes and lid.

MJC Mini 4/22/21 and MJC Mini 8/40/21 only

1) Remove the nuts securing the lid and lift off the lid, putting it in a safe position, so that the wiring and compressed air hose are not stressed.
2) Unscrew and remove the knobs and washers securing the cartridges.
3) Withdraw the cartridges, shaking them first before extracting to remove excess loose material.

NOTE! You are strongly advised to replace the black cartridge sealing ring before re-fitting a cartridge.

Before replacing the cartridges, clean the area around the cartridge sealing ring location. Insert the cartridges carefully. Screw down the four cartridge clamping knobs firmly but evenly by hand. Do not overtighten by using a tool.

10.4 Replacement of the fan impeller

REMARK. The instructions below refer to an integral fan (**NF** type)

1. Isolate the electrical supply and then disconnect the motor at the motor terminal box. Note positions of the cables to ensure correct connections when re-assembling.
2. Support the motor and release the screws securing the motor mounting plate to the fan case.
3. Withdraw the motor and mounting plate together with the fan impeller and lower to the ground.
4. Remove the screw and washer at the end of the motor shaft and withdraw the fan impeller, retaining the shaft key for re-use.
5. Re-assemble as above, but in reverse order. Ensure that motor shaft, keyway, key and fan impeller boss are completely clean before putting these parts together.

When assembly is complete, check that the fan impeller rotates freely. Also check that the clearance between the impeller and the perimeter of the fixed inlet is uniform. This will ensure safe operation without risk of metal to metal contact. Any defects must be corrected before the fan is put into use again.

10.5 Replacement of diaphragm in cleaning valve.

REMARK. a diaphragm valve repair kit is available from NEDERMAN for this purpose.

1. Disconnect the compressed air supply. Open the tank drain tap slowly, until the compressed air tank is empty. Note whether water and oil mist emerge. Leave the drain tap open until the work is complete.
2. Remove the cover from the diaphragm valve and withdraw the diaphragm. Normally the solenoid valve is directly mounted onto the diaphragm valve lid. This may be left in place on the lid, but its electrical supply should be disconnected by first removing the single retaining screw in the plug. Note also that there may be a loose spring behind the diaphragm, depending upon valve type. Do not forget to re-fit this spring during re-assembly.
3. Check that the mating surfaces between the diaphragm, the valve body and the valve cover are clean and free from dust.
4. Fit the diaphragm (and spring if present) and the diaphragm valve cover together with a new sealing gasket. The screws should be tightened diagonally. Certain diaphragm valve covers may be retained by a C-clip. If so, ensure that the C-clip is inserted correctly.
5. Close the drain tap, then turn on the compressed air supply and listen for any sign of leaking air. If all is well, follow the procedure for filter start (see earlier in Maintenance section).

10.6 Replacement of solenoid valve coil

A solenoid valve repair kit is available from NEDERMAN for this purpose.

The solenoid valves are normally directly mounted onto the diaphragm valves that are mounted on the compressed air manifold. Under rare special conditions they may be situated in a separate enclosure and connected by pipes to the diaphragm valves.

1. Isolate electrical supply.
2. Remove the single retaining screw in the electrical plug and remove the plug.
3. Remove the coil retaining clip and slide the coil off the stem.
4. Refit new coil by reversing this procedure.

10.7 Spare parts

Contact your nearest authorized distributor or NEDERMAN for advice on technical service or if you require help with spare parts. See also:

www.nederman.com

Ordering spare parts

When ordering spare parts always state the following:

- Unit type and its serial number (see the product identification plate).
- Number and description of the spare part (see Table 10-2).
- Quantity of the parts required.

Spare parts for MJC Mini Cartridge dust collector are presented in Table 10-2.

Table 10-2: MJC Mini Cartridge dust collector - list of spare parts available

Pos.*	Fig. No.	Spare parts name	Remarks
1	22	Dust collecting bin	
2	22	Dust bin quick release mechanism	
3	22	Handle for dust collecting bin	
4	22	Inlet blanking plate	
5	22	Deflector wear plate	
6	22	Inlet spigot with flange	
13	22	Jet tube	
14	22	Jet tube knob screw with shake-proof washer	
15	22	Compressed air tank	
16	22	Compressed air tank drain tap	1/4 " BSP
17	22	Cleaning controller	Located usually on the pressured air tank
18	22	Clean air chamber upper cover	
19	22	Weather cowl for fan silencer	
20	22	Fan silencer	Optionally with bird mesh
21	22	Fan motor	Power [kW]: 0.75, 1.1, 2.2, 3.0, 4.0
22	22	Fan motor mounting plate	Size depends on motor power
23	22	Fan copper protecting plate	Only for Ex version

* see Fig. 22 or 23

Pos.*	Fig. No.	Spare parts name	Remarks
24	22	Fan impeller	Size depends on motor power
25	22	Fan inlet tube	With protecting grill
26	22	Filter cartridge	Size range: 22, 40, 66
27	22	Cartridge clamping plate	
28	22	Knob nut for fixing the cartridge clamping plate	
29	22	Compressed air tank manometer	
30	22	Test point plug	
2	23	Jet tube and sleeve seal	Type UFO 2
3	23	Diaphragm valve outlet sleeve	
5	23	Diaphragm valve	
6	23	Coil for solenoid valve (standard v. 24 V DC)	

* see Fig. 22 or 23

These items are available as spare parts. Other items may be available to special order. Note that when ordering solenoid valves, the voltage should also be stated.

NOTE! When ordering spare parts for integral (built-in) fans, please state motor size in kW and the serial number of the dust collector.

Other optional items

Please contact NEDERMAN Service Dept. for details related to rotary valve, special controls or other nonstandard items. Please quote the dust collector serial number.

11 Recycling

At the end of its working life, the filter unit and associated items should be disposed of in a safe and legal manner. The product has been designed for component materials to be recycled. Its different material types must be handled according to relevant local regulations.

11.1 Dismantling and disposal

NOTE! Before any kind of activity, the SAFETY REGULATIONS (Chapter 4) must be read carefully, and the safety predictions must be strictly adhered to.

NOTE! Stop and isolate the plant and use suitable personal safety equipment before commencing the dismantling the dust collector unit. All operations should be performed only by suitably qualified and experienced personnel. Isolate electrical supply as well as the pressured air supply before commencing.

Clean the unit as far as possible before dismantling. Dispose of waste matter in accordance with the guidelines for the type of waste present.

Normal safe practices should be observed, taking into account the materials handled by the filter unit. Please consult the Chapter 8 'Installation' and generally reverse this procedure. It is recommended that all filter elements are removed, bins emptied and the inside of the filter unit cleaned before dismantling commences.

To dismantle and remove large assemblies or components, a suitable crane should be used.

WARNING! Risk of personal injuries
The risk of being crushed by falling objects. Take special care when lifting, lowering and moving the device or its parts.
Always use proper lifting and protective equipment.

WARNING! Risk of falling into dust container. Risk of being buried. Risk of suffocation
When the filter is lifted from its position on the dust container or silo, the aperture on the container remained open must be immediately covered and protected to prevent from falling into the silo during the execution of further works.

The filter unit may contain the following materials (excluding filtered product):

- Steel parts. Generally painted or galvanised, with typically polyurethane or sometimes silicone sealants
- Electrical components, including aluminium or cast iron framed motors, electrical controller including plastic enclosure and printed circuit boards and components.
- Filter elements. Synthetic materials commonly polyester, possibly aramids or other synthetics with surface treatment / finishing. These will be further contaminated with the filtered product.
- Various plastic and rubberised plastic items. These include door and lid seals, knobs and sealing rings.

12 Troubleshooting

NOTE! All troubleshooting and fault remedying activities may by performed by skilled competent staff only, with knowledge of the plant function and build-up.

NOTE! Before any kind of activity, the SAFETY REGULATIONS (Chapter 4) must be read carefully, and the safety predictions must be strictly adhered to.

With reasonable use and maintenance at the prescribed periods shown in Chapter 10.1.1, there is little that is likely to fail in service. Excessive temperature, or low temperatures causing condensation are possible reasons for unsatisfactory operation.

The fault location table that follows explores most likely faults, together with possible remedies.

If the trouble shooting guide in ‘Table 12-1: Trouble shooting guide’ does not solve the problem, contact your nearest authorized distributor or NEDERMAN for technical advice.

Table 12-1: Trouble shooting guide

Fault	Possible cause	Solution proposal
Blocked filter / low airflow / abnormally high filter differential pressure.	Insufficient cleaning.	If cleaning continuous, reduce intervals between cleaning pulses. If cleaning on demand, reduce cleaning start and stop pressure. Check that after-cleaning operates when fan stops; increase time.
	Weak reverse jet cleaning pulses.	Check compressed-air pressure in tank. Increase if low. Check voltage on controller and solenoid valves. Check by listening that all cleaning valves operate. Replace valve diaphragm, solenoid valve, or controller as necessary.
	After clean not working.	Check that emergency stop is not activated. Check electrical connection to fan starter to start after clean. Check controller after clean setting.
	Peak dust load too high, overloading the filter.	Check extraction hoods / dampers. Reduce airflow if appropriate.
	Filter cartridges are blinded.	Replace cartridges if cleaning is ineffective. Check for signs of moisture or oil contamination.
Unexpected low airflow, maybe after maintenance shutdown.	Fan rotation wrong.	Reverse fan rotation.
Material accumulates in filter hopper.	Blocked discharge system.	Check function. Ensure discharge system running during after-clean. Check that bin is not overfilled.
	Air being drawn in through the discharge opening reducing outward dust flow.	Check and replace seals as necessary in rotary valve or other device.
	Moist dust sticking to the hopper surfaces.	Check cause of moisture. Check trace heating if fitted. Check process if unexpectedly damp dust.
Waste cartridges or bins are not filled equally.	Loose or missing deflector.	Insertion of guide plates in the filter hopper above the waste containers may solve this problem.
	Natural phenomenon which can depend on the composition of the waste.	Accept this condition.
Emissions from or leakage into unit via lids or doors.	Loose clamping bolts or faulty seals.	Check correct closure; replace seals if deformed.
Unexpected emissions when fan not running.	Filter outlet closed; short inlet duct allows dust to reach process during after-clean period.	Check outlet damper. Fit non-return damper on inlet duct.
Unexpected emissions from filter at any time.	Unit operating under positive pressure higher than specified (normally negative pressure).	Investigate inlet / outlet pressures. Re-balance system

Fault	Possible cause	Solution proposal
Excessive dust in air outlet.	Defective filter cartridge.	Replace cartridge and check the others for wear or abrasion.
	Filter cartridge incorrectly fitted.	Fit cartridge correctly (see Installation instructions).
	Wrong filter material installed.	Consult NEDERMAN Service Dept.
	Bin-balance pipe fitted, but no plastic liner in bin.	Fit plastic liner or disconnect and seal bin balance pipe connections.
The fan vibrates.	Excess dust in the fan.	Clean the fan impeller. Check source of dust leak.
	The fan impeller is damaged and thus not in balance.	Balance the fan impeller or fit a new one.
	The fan is loose or out of alignment.	Check and re-fit fan.
The fan motor is burned out.	A defective or wrongly adjusted overload	Adjust or replace the protective motor switch
Fan motor current unexpectedly high.	Airflow volume too high resulting from low system resistance.	Increase the system resistance by closing dampers partially.
	Too many hoods in use.	Reduce airflow volume by closing unused suction points.
	Break in ductwork.	Check and repair ducting.
Noise from inlet.	The fan rubs against the inlet.	Adjust the inlet.
Reduced performance.	The fan impeller is rotating in the wrong direction.	Reverse fan motor direction.
	Fan impeller coated with dust.	Clean the fan impeller.
	Duct system blockage.	Locate and remove blockage.
The fan runs hot.	The fan impeller is rotating in the wrong direction.	Reverse fan motor direction.
	Dry bearings.	Inspect and lubricate.
No valve activation.	Wrong setting of number of valves.	Check filter controller
	Defective cable connection.	Check cables and cable connections.
	Defective solenoid coil.	Replace solenoid coil.
	Cycle interrupted.	Check and reset reverse jet controller settings.
No after-cleaning.	Wrong setting.	Check filter controller.
	No signal connection from fan.	Check connections between fan starter and reverse jet controller.
Cleaning is ineffective.	Time interval between cleaning pulses is too long.	Reduce time interval. (Note: minimum 10 seconds).
	Compressed air pressure too low.	Set the pressure to 5.5 bar.
	Defective diaphragm or solenoid valve.	Check and replace diaphragm or solenoid coil as necessary.
	Pulse duration is too short.	Check reverse jet controller settings. Typical pulse duration should be 100 to 120 milliseconds.
Cleaning is ineffective	Clean on demand pressure settings incorrect.	Reset ON and OFF pressures in the reverse jet controller.

Fault	Possible cause	Solution proposal
Incorrect value of differential pressure displayed.	Blocked sensor pipes or connection fitting in filter.	Clean the sensor pipes and their end fittings. If using compressed air to remove blockages, disconnect pipes from controller first to prevent damage to delicate components. Remove any sharp bends or kinks.

If the fault persists, then please contact your nearest NEDERMAN Service Department for assistance.

Special conditions.

There may be special operating conditions for the filter unit where it is used as part of a process application. The unit may be, for instance, insulated and have external trace heating cables fitted. Process controls may integrate the operation of the filter into a larger installation of process machinery.

Please refer to particular manuals regarding the operation of the NEDERMAN dust separating system under these circumstances.

Trouble free performance

The operation of any filter unit will benefit from regular servicing with maintenance by professionals using manufacturers' recommended parts. The following section on maintenance describes the procedures involved but we recommend that you arrange maintenance and service facilities with your nearest NEDERMAN representative.

Appendix A: Installation protocol

Copy the installation protocol, fill it in and save it as a service record.

For values, note the value in the result column, otherwise a tick will suffice if the item has been performed or considered.

NOTE! If a value is outside the limit or a result is incorrect or missing, this must be rectified before the initial start-up and normal operation.

Unit No.	Date:	
	Performed by:	

Control items	Reference	Result	Notes

Appendix B: Service protocol

Copy the service protocol, fill it in and save it as a service record.

For values, note the value in the result column, otherwise a tick will suffice if the item has been performed or considered.

NOTE! If the results of the checks (for example, measured values) differ significantly from previous results, investigate more carefully.

Unit No.	Date:	
	Operating hours:	
	Performed by:	

Control items	Reference	Result	Notes

eurofins | Environment Testing America

ANALYTICAL REPORT

Eurofins TestAmerica, Tampa
6712 Benjamin Road
Suite 100
Tampa, FL 33634
Tel: (813)885-7427

Laboratory Job ID: 660-116404-1
Client Project/Site: Processed Glass/Metals - Hg

For:
Lighting Resources LLC
1007 SW 16th Lane
Ocala, Florida 34471

Attn: Buff Fritz

Authorized for release by:
12/23/2021 7:59:40 AM

Matt Jones, Project Manager I
(850)284-4486
matthew.jones@eurofinset.com

LINKS

Review your project results through TotalAccess

Have a Question? Ask The Expert

Visit us at:
www.eurofinsus.com/Env

The test results in this report meet all 2003 NELAC, 2009 TNI, and 2016 TNI requirements for accredited parameters, exceptions are noted in this report. This report may not be reproduced except in full, and with written approval from the laboratory. For questions please contact the Project Manager at the e-mail address or telephone number listed on this page.

This report has been electronically signed and authorized by the signatory. Electronic signature is intended to be the legally binding equivalent of a traditionally handwritten signature.

Results relate only to the items tested and the sample(s) as received by the laboratory.

Client: Lighting Resources LLC
Project/Site: Processed Glass/Metals - Hg

Laboratory Job ID: 660-116404-1

Table of Contents

Cover Page 1
Table of Contents 2
Sample Summary 3
Case Narrative 4
Definitions/Glossary 5
Detection Summary 6
Client Sample Results 7
QC Sample Results 8
QC Association Summary 9
Lab Chronicle 10
Method Summary 11
Certification Summary 12
Chain of Custody 13
Receipt Checklists 14

Sample Summary

Client: Lighting Resources LLC
Project/Site: Processed Glass/Metals - Hg

Job ID: 660-116404-1

Lab Sample ID	Client Sample ID	Matrix	Collected	Received
660-116404-1	Processed Glass C-3	Solid	12/21/21 06:00	12/22/21 11:00
660-116404-2	Processed Metal C-3	Solid	12/21/21 06:15	12/22/21 11:00
660-116404-3	Multi Purpose Metal C-3	Solid	12/21/21 06:30	12/22/21 11:00
660-116404-4	Processed Glass C-4	Solid	12/21/21 06:45	12/22/21 11:00
660-116404-5	Processed Metal C-4	Solid	12/21/21 07:00	12/22/21 11:00
660-116404-6	Multi Purpose Metal C-4	Solid	12/21/21 07:15	12/22/21 11:00

Case Narrative

Client: Lighting Resources LLC
Project/Site: Processed Glass/Metals - Hg

Job ID: 660-116404-1

Job ID: 660-116404-1

Laboratory: Eurofins TestAmerica, Tampa

Narrative

Job Narrative
660-116404-1

Comments
No additional comments.

Receipt
The samples were received on 12/22/2021 11:00 AM. Unless otherwise noted below, the samples arrived in good condition, and where required, properly preserved and on ice. The temperature of the cooler at receipt was 18.2° C.

Metals
No analytical or quality issues were noted, other than those described in the Definitions/Glossary page.

Definitions/Glossary

Client: Lighting Resources LLC
Project/Site: Processed Glass/Metals - Hg

Job ID: 660-116404-1

Qualifiers

Metals

Qualifier	Qualifier Description
U	Indicates that the compound was analyzed for but not detected.

Glossary

Abbreviation	These commonly used abbreviations may or may not be present in this report.
¤	Listed under the "D" column to designate that the result is reported on a dry weight basis
%R	Percent Recovery
CFL	Contains Free Liquid
CFU	Colony Forming Unit
CNF	Contains No Free Liquid
DER	Duplicate Error Ratio (normalized absolute difference)
Dil Fac	Dilution Factor
DL	Detection Limit (DoD/DOE)
DL, RA, RE, IN	Indicates a Dilution, Re-analysis, Re-extraction, or additional Initial metals/anion analysis of the sample
DLC	Decision Level Concentration (Radiochemistry)
EDL	Estimated Detection Limit (Dioxin)
LOD	Limit of Detection (DoD/DOE)
LOQ	Limit of Quantitation (DoD/DOE)
MCL	EPA recommended "Maximum Contaminant Level"
MDA	Minimum Detectable Activity (Radiochemistry)
MDC	Minimum Detectable Concentration (Radiochemistry)
MDL	Method Detection Limit
ML	Minimum Level (Dioxin)
MPN	Most Probable Number
MQL	Method Quantitation Limit
NC	Not Calculated
ND	Not Detected at the reporting limit (or MDL or EDL if shown)
NEG	Negative / Absent
POS	Positive / Present
PQL	Practical Quantitation Limit
PRES	Presumptive
QC	Quality Control
RER	Relative Error Ratio (Radiochemistry)
RL	Reporting Limit or Requested Limit (Radiochemistry)
RPD	Relative Percent Difference, a measure of the relative difference between two points
TEF	Toxicity Equivalent Factor (Dioxin)
TEQ	Toxicity Equivalent Quotient (Dioxin)
TNTC	Too Numerous To Count

Detection Summary

Client: Lighting Resources LLC
Project/Site: Processed Glass/Metals - Hg

Job ID: 660-116404-1

Client Sample ID: Processed Glass C-3 — Lab Sample ID: 660-116404-1

No Detections.

Client Sample ID: Processed Metal C-3 — Lab Sample ID: 660-116404-2

Analyte	Result	Qualifier	PQL	MDL	Unit	Dil Fac	D	Method	Prep Type
Mercury	0.13		0.038	0.011	mg/Kg	1		7471A	Total/NA

Client Sample ID: Multi Purpose Metal C-3 — Lab Sample ID: 660-116404-3

Analyte	Result	Qualifier	PQL	MDL	Unit	Dil Fac	D	Method	Prep Type
Mercury	0.083		0.040	0.012	mg/Kg	1		7471A	Total/NA

Client Sample ID: Processed Glass C-4 — Lab Sample ID: 660-116404-4

No Detections.

Client Sample ID: Processed Metal C-4 — Lab Sample ID: 660-116404-5

Analyte	Result	Qualifier	PQL	MDL	Unit	Dil Fac	D	Method	Prep Type
Mercury	0.093		0.038	0.011	mg/Kg	1		7471A	Total/NA

Client Sample ID: Multi Purpose Metal C-4 — Lab Sample ID: 660-116404-6

Analyte	Result	Qualifier	PQL	MDL	Unit	Dil Fac	D	Method	Prep Type
Mercury	0.67		0.039	0.012	mg/Kg	1		7471A	Total/NA

This Detection Summary does not include radiochemical test results.

Eurofins TestAmerica, Tampa

Client Sample Results

Client: Lighting Resources LLC
Project/Site: Processed Glass/Metals - Hg

Job ID: 660-116404-1

Client Sample ID: Processed Glass C-3

Lab Sample ID: 660-116404-1
Date Collected: 12/21/21 06:00
Matrix: Solid
Date Received: 12/22/21 11:00

Method: 7471A - Mercury (CVAA)

Analyte	Result	Qualifier	PQL	MDL	Unit	D	Prepared	Analyzed	Dil Fac
Mercury	0.012	U	0.040	0.012	mg/Kg		12/22/21 11:50	12/22/21 15:01	1

Client Sample ID: Processed Metal C-3

Lab Sample ID: 660-116404-2
Date Collected: 12/21/21 06:15
Matrix: Solid
Date Received: 12/22/21 11:00

Method: 7471A - Mercury (CVAA)

Analyte	Result	Qualifier	PQL	MDL	Unit	D	Prepared	Analyzed	Dil Fac
Mercury	0.13		0.038	0.011	mg/Kg		12/22/21 11:50	12/22/21 15:03	1

Client Sample ID: Multi Purpose Metal C-3

Lab Sample ID: 660-116404-3
Date Collected: 12/21/21 06:30
Matrix: Solid
Date Received: 12/22/21 11:00

Method: 7471A - Mercury (CVAA)

Analyte	Result	Qualifier	PQL	MDL	Unit	D	Prepared	Analyzed	Dil Fac
Mercury	0.083		0.040	0.012	mg/Kg		12/22/21 11:50	12/22/21 15:06	1

Client Sample ID: Processed Glass C-4

Lab Sample ID: 660-116404-4
Date Collected: 12/21/21 06:45
Matrix: Solid
Date Received: 12/22/21 11:00

Method: 7471A - Mercury (CVAA)

Analyte	Result	Qualifier	PQL	MDL	Unit	D	Prepared	Analyzed	Dil Fac
Mercury	0.013	U	0.043	0.013	mg/Kg		12/22/21 11:50	12/22/21 15:14	1

Client Sample ID: Processed Metal C-4

Lab Sample ID: 660-116404-5
Date Collected: 12/21/21 07:00
Matrix: Solid
Date Received: 12/22/21 11:00

Method: 7471A - Mercury (CVAA)

Analyte	Result	Qualifier	PQL	MDL	Unit	D	Prepared	Analyzed	Dil Fac
Mercury	0.093		0.038	0.011	mg/Kg		12/22/21 11:50	12/22/21 15:17	1

Client Sample ID: Multi Purpose Metal C-4

Lab Sample ID: 660-116404-6
Date Collected: 12/21/21 07:15
Matrix: Solid
Date Received: 12/22/21 11:00

Method: 7471A - Mercury (CVAA)

Analyte	Result	Qualifier	PQL	MDL	Unit	D	Prepared	Analyzed	Dil Fac
Mercury	0.67		0.039	0.012	mg/Kg		12/22/21 11:50	12/22/21 15:19	1

QC Sample Results

Client: Lighting Resources LLC
Project/Site: Processed Glass/Metals - Hg

Job ID: 660-116404-1

Method: 7471A - Mercury (CVAA)

Lab Sample ID: MB 660-247329/13-A
Matrix: Solid
Analysis Batch: 247336

Client Sample ID: Method Blank
Prep Type: Total/NA
Prep Batch: 247329

Analyte	MB Result	MB Qualifier	PQL	MDL	Unit	D	Prepared	Analyzed	Dil Fac
Mercury	0.012	U	0.040	0.012	mg/Kg		12/22/21 11:50	12/22/21 14:19	1

Lab Sample ID: LCS 660-247329/14-A
Matrix: Solid
Analysis Batch: 247336

Client Sample ID: Lab Control Sample
Prep Type: Total/NA
Prep Batch: 247329

Analyte	Spike Added	LCS Result	LCS Qualifier	Unit	D	%Rec	%Rec. Limits
Mercury	0.167	0.144		mg/Kg		86	80 - 120

Lab Sample ID: 660-116305-B-1-C MS
Matrix: Solid
Analysis Batch: 247336

Client Sample ID: Matrix Spike
Prep Type: Total/NA
Prep Batch: 247329

Analyte	Sample Result	Sample Qualifier	Spike Added	MS Result	MS Qualifier	Unit	D	%Rec	%Rec. Limits
Mercury	0.015	I	0.185	0.189		mg/Kg		94	80 - 120

Lab Sample ID: 660-116305-B-1-D MSD
Matrix: Solid
Analysis Batch: 247336

Client Sample ID: Matrix Spike Duplicate
Prep Type: Total/NA
Prep Batch: 247329

Analyte	Sample Result	Sample Qualifier	Spike Added	MSD Result	MSD Qualifier	Unit	D	%Rec	%Rec. Limits	RPD	RPD Limit
Mercury	0.015	I	0.179	0.189		mg/Kg		98	80 - 120	0	20

QC Association Summary

Client: Lighting Resources LLC
Project/Site: Processed Glass/Metals - Hg

Job ID: 660-116404-1

Metals

Prep Batch: 247329

Lab Sample ID	Client Sample ID	Prep Type	Matrix	Method	Prep Batch
660-116404-1	Processed Glass C-3	Total/NA	Solid	7471A	
660-116404-2	Processed Metal C-3	Total/NA	Solid	7471A	
660-116404-3	Multi Purpose Metal C-3	Total/NA	Solid	7471A	
660-116404-4	Processed Glass C-4	Total/NA	Solid	7471A	
660-116404-5	Processed Metal C-4	Total/NA	Solid	7471A	
660-116404-6	Multi Purpose Metal C-4	Total/NA	Solid	7471A	
MB 660-247329/13-A	Method Blank	Total/NA	Solid	7471A	
LCS 660-247329/14-A	Lab Control Sample	Total/NA	Solid	7471A	
660-116305-B-1-C MS	Matrix Spike	Total/NA	Solid	7471A	
660-116305-B-1-D MSD	Matrix Spike Duplicate	Total/NA	Solid	7471A	

Analysis Batch: 247336

Lab Sample ID	Client Sample ID	Prep Type	Matrix	Method	Prep Batch
660-116404-1	Processed Glass C-3	Total/NA	Solid	7471A	247329
660-116404-2	Processed Metal C-3	Total/NA	Solid	7471A	247329
660-116404-3	Multi Purpose Metal C-3	Total/NA	Solid	7471A	247329
660-116404-4	Processed Glass C-4	Total/NA	Solid	7471A	247329
660-116404-5	Processed Metal C-4	Total/NA	Solid	7471A	247329
660-116404-6	Multi Purpose Metal C-4	Total/NA	Solid	7471A	247329
MB 660-247329/13-A	Method Blank	Total/NA	Solid	7471A	247329
LCS 660-247329/14-A	Lab Control Sample	Total/NA	Solid	7471A	247329
660-116305-B-1-C MS	Matrix Spike	Total/NA	Solid	7471A	247329
660-116305-B-1-D MSD	Matrix Spike Duplicate	Total/NA	Solid	7471A	247329

Lab Chronicle

Client: Lighting Resources LLC
Project/Site: Processed Glass/Metals - Hg

Job ID: 660-116404-1

Client Sample ID: Processed Glass C-3
Lab Sample ID: 660-116404-1
Date Collected: 12/21/21 06:00
Matrix: Solid
Date Received: 12/22/21 11:00

Prep Type	Batch Type	Batch Method	Run	Dilution Factor	Batch Number	Prepared or Analyzed	Analyst	Lab
Total/NA	Prep	7471A			247329	12/22/21 11:50	JS	TAL TAM
Total/NA	Analysis	7471A		1	247336	12/22/21 15:01	GG	TAL TAM

Client Sample ID: Processed Metal C-3
Lab Sample ID: 660-116404-2
Date Collected: 12/21/21 06:15
Matrix: Solid
Date Received: 12/22/21 11:00

Prep Type	Batch Type	Batch Method	Run	Dilution Factor	Batch Number	Prepared or Analyzed	Analyst	Lab
Total/NA	Prep	7471A			247329	12/22/21 11:50	JS	TAL TAM
Total/NA	Analysis	7471A		1	247336	12/22/21 15:03	GG	TAL TAM

Client Sample ID: Multi Purpose Metal C-3
Lab Sample ID: 660-116404-3
Date Collected: 12/21/21 06:30
Matrix: Solid
Date Received: 12/22/21 11:00

Prep Type	Batch Type	Batch Method	Run	Dilution Factor	Batch Number	Prepared or Analyzed	Analyst	Lab
Total/NA	Prep	7471A			247329	12/22/21 11:50	JS	TAL TAM
Total/NA	Analysis	7471A		1	247336	12/22/21 15:06	GG	TAL TAM

Client Sample ID: Processed Glass C-4
Lab Sample ID: 660-116404-4
Date Collected: 12/21/21 06:45
Matrix: Solid
Date Received: 12/22/21 11:00

Prep Type	Batch Type	Batch Method	Run	Dilution Factor	Batch Number	Prepared or Analyzed	Analyst	Lab
Total/NA	Prep	7471A			247329	12/22/21 11:50	JS	TAL TAM
Total/NA	Analysis	7471A		1	247336	12/22/21 15:14	GG	TAL TAM

Client Sample ID: Processed Metal C-4
Lab Sample ID: 660-116404-5
Date Collected: 12/21/21 07:00
Matrix: Solid
Date Received: 12/22/21 11:00

Prep Type	Batch Type	Batch Method	Run	Dilution Factor	Batch Number	Prepared or Analyzed	Analyst	Lab
Total/NA	Prep	7471A			247329	12/22/21 11:50	JS	TAL TAM
Total/NA	Analysis	7471A		1	247336	12/22/21 15:17	GG	TAL TAM

Client Sample ID: Multi Purpose Metal C-4
Lab Sample ID: 660-116404-6
Date Collected: 12/21/21 07:15
Matrix: Solid
Date Received: 12/22/21 11:00

Prep Type	Batch Type	Batch Method	Run	Dilution Factor	Batch Number	Prepared or Analyzed	Analyst	Lab
Total/NA	Prep	7471A			247329	12/22/21 11:50	JS	TAL TAM
Total/NA	Analysis	7471A		1	247336	12/22/21 15:19	GG	TAL TAM

Laboratory References:
TAL TAM = Eurofins TestAmerica, Tampa, 6712 Benjamin Road, Suite 100, Tampa, FL 33634, TEL (813)885-7427

Method Summary

Client: Lighting Resources LLC
Project/Site: Processed Glass/Metals - Hg

Job ID: 660-116404-1

Method	Method Description	Protocol	Laboratory
7471A	Mercury (CVAA)	SW846	TAL TAM
7471A	Preparation, Mercury	SW846	TAL TAM

Protocol References:

SW846 = "Test Methods For Evaluating Solid Waste, Physical/Chemical Methods", Third Edition, November 1986 And Its Updates.

Laboratory References:

TAL TAM = Eurofins TestAmerica, Tampa, 6712 Benjamin Road, Suite 100, Tampa, FL 33634, TEL (813)885-7427

Accreditation/Certification Summary

Client: Lighting Resources LLC
Project/Site: Processed Glass/Metals - Hg

Job ID: 660-116404-1

aboratory: Eurofins TestAmerica, Tampa

.e accreditations/certifications listed below are applicable to this report.

Authority	Program	Identification Number	Expiration Date
Florida	NELAP	E84282	06-30-22

TestAmerica Tampa
6712 Benjami[illegible] d Suite 100
Tampa, FL 3[illegible]
Phone (813) 885-7427 Fax (813) 885-7049

Chain of Custo[illegible] Record

TestAr[illegible]erica
THE LEADER IN ENVIRONMENTAL TESTING

Client Information				
Client Contact: Jason Muhlenkamp	Sampler: BUFF FRITZ	Lab PM: Gartner, Cathy	Carrier Tracking No(s):	COC No: 660-73742-20831.1
Company: Lighting Resources LLC	Phone: 352-509-3001	E-Mail: cathy.gartner@testamericainc.com		Page: Page 1 of 2
Address: 1919 Williams St Suite 350	Due Date Requested: 12/22/21			Job #:
City: Simi Valley	TAT Requested (days): * 8 hr Rush			
State, Zip: CA, 93065				
Phone: 352-509-3001(Tel)	PO #: Purchase Order not required			
Email: jason.muhlenkamp@lightingresourcesinc.com	WO #:			
Project Name: Processed Glass/Metals - Hg	Project #: 66006094			
Site: Florida	SSOW#:			

Analysis Requested

Preservation Codes:
A - HCL, B - NaOH, C - Zn Acetate, D - Nitric Acid, E - NaHSO4, F - MeOH, G - Amchlor, H - Ascorbic Acid, I - Ice, J - DI Water, K - EDTA, L - EDA, M - Hexane, N - None, O - AsNaO2, P - Na2O4S, Q - Na2SO3, R - Na2S2O3, S - H2SO4, T - TSP Dodecahydrate, U - Acetone, V - MCAA, W - pH 4-5, Z - other (specify)
Other:

Sample Identification	Sample Date	Sample Time	Sample Type (C=comp, G=grab)	Matrix (W=water, S=solid, O=waste/oil, BT=Tissue, A=Air)	Field Filtered Sample (Yes or No)	Perform MS/MSD (Yes or No)	7471A - Mercury									Total Number of containers	Special Instructions/Note:
			Preservation Code:				N										
PROCESSED GLASS C-3	12/21/21	6 Am	C	Solid			✓										
PROCESSED METAL C-3	12/21/21	615	C	Solid			✓										
MULTI PURPOSE METAL C-3	12/21/21	630 Am	C	Solid			✓										
				Solid													
				Solid													
PROCESSED GLASS C-4	12/21/21	645	C	Solid			✓										
PROCESSED METAL C-4	12/21/21	7 Am	C	Solid			✓										
MULTI PURPOSE METAL C-4	12/21/21	715 Am	C	Solid			✓										
				Solid													
				Solid													
				Solid													

660-116404 Chain of Custody

Loc: 660
116404

Possible Hazard Identification
☐ Non-Hazard ☐ Flammable ☐ Skin Irritant ☐ Poison B ☐ Unknown ☐ Radiological

Sample Disposal (A fe[illegible] samples are retained longer than 1 month)
☐ Return To Client ☐ Lab ☐ Archive For _____ Months

Deliverable Requested: I, II, III, IV, Other (specify)

Special Instructions/QC F[illegible]

Empty Kit Relinquished by: [illegible] Date: 05-15-17 Time: 1400 Method of Shipment: FXG

Relinquished by	Date/Time	Company	Received by	Date/Time	Company
[illegible]	12/21/21 1600	LRI	[illegible]	12/22/21 11:00	CTA
Relinquished by:	Date/Time:	Company	Received by:	Date/Time:	Company
Relinquished by:	Date/Time:	Company	Received by:	Date/Time:	Company

Custody Seals Intact: Δ Yes Δ No
Custody Seal No.:
Cooler Temperature(s) °C and Other Remarks: 17.6 / 18.2 cu-09

Login Sample Receipt Checklist

ient: Lighting Resources LLC

Job Number: 660-116404-1

Login Number: 116404
List Number: 1
Creator: Arevalo, Maria L

List Source: Eurofins TestAmerica, Tampa

Question	Answer	Comment
Radioactivity wasn't checked or is </= background as measured by a survey meter.	N/A	
The cooler's custody seal, if present, is intact.	True	
Sample custody seals, if present, are intact.	True	
The cooler or samples do not appear to have been compromised or tampered with.	True	
Samples were received on ice.	True	
Cooler Temperature is acceptable.	True	
Cooler Temperature is recorded.	True	
COC is present.	True	
COC is filled out in ink and legible.	True	
COC is filled out with all pertinent information.	True	
Is the Field Sampler's name present on COC?	True	
There are no discrepancies between the containers received and the COC.	True	
Samples are received within Holding Time (excluding tests with immediate HTs)	True	
Sample containers have legible labels.	True	
ontainers are not broken or leaking.	True	
Sample collection date/times are provided.	True	
Appropriate sample containers are used.	True	
Sample bottles are completely filled.	True	
Sample Preservation Verified.	True	
There is sufficient vol. for all requested analyses, incl. any requested MS/MSDs	True	
Containers requiring zero headspace have no headspace or bubble is <6mm (1/4").	True	
Multiphasic samples are not present.	True	
Samples do not require splitting or compositing.	True	
Residual Chlorine Checked.	N/A	

Pace Analytical Services, LLC
7726 Moller Road
Indianapolis, IN 46268
(317)228-3100

April 06, 2021

Mr. Rick Miller
Lighting Resources, Inc.
498 Park 800 Drive
Greenwood, IN 46143

RE: Project: RETORTED PHOSPHOR POWDER
Pace Project No.: 50283639

Dear Mr. Miller:

Enclosed are the analytical results for sample(s) received by the laboratory on March 31, 2021. The results relate only to the samples included in this report. Results reported herein conform to the applicable TNI/NELAC Standards and the laboratory's Quality Manual, where applicable, unless otherwise noted in the body of the report.

The test results provided in this final report were generated by each of the following laboratories within the Pace Network:

- Pace Analytical Services - Indianapolis

If you have any questions concerning this report, please feel free to contact me.

Sincerely,

Olivia Deck
olivia.deck@pacelabs.com
(317)228-3102
Project Manager

Enclosures

cc: Mr. Dan Gillespie, Lighting Resources, Inc.
Chris Mobley, Lighting Resources, LLC

REPORT OF LABORATORY ANALYSIS

This report shall not be reproduced, except in full,
without the written consent of Pace Analytical Services, LLC.

Pace Analytical Services, LLC
7726 Moller Road
Indianapolis, IN 46268
(317)228-3100

CERTIFICATIONS

Project:	RETORTED PHOSPHOR POWDER
Pace Project No.:	50283639

Pace Analytical Services Indianapolis

7726 Moller Road, Indianapolis, IN 46268
Illinois Accreditation #: 200074
Indiana Drinking Water Laboratory #: C-49-06
Kansas/TNI Certification #: E-10177
Kentucky UST Agency Interest #: 80226
Kentucky WW Laboratory ID #: 98019
Michigan Drinking Water Laboratory #9050
Ohio VAP Certified Laboratory #: CL0065
Oklahoma Laboratory #: 9204
Texas Certification #: T104704355
Wisconsin Laboratory #: 999788130
USDA Soil Permit #: P330-19-00257

This report shall not be reproduced, except in full,
without the written consent of Pace Analytical Services, LLC.

Pace Analytical Services, LLC
7726 Moller Road
Indianapolis, IN 46268
(317)228-3100

SAMPLE SUMMARY

Project: RETORTED PHOSPHOR POWDER
Pace Project No.: 50283639

Lab ID	Sample ID	Matrix	Date Collected	Date Received
50283639001	**469148H Ocala Pre**	Solid	03/30/21 08:00	03/31/21 13:25

This report shall not be reproduced, except in full,
without the written consent of Pace Analytical Services, LLC.

Pace Analytical Services, LLC
7726 Moller Road
Indianapolis, IN 46268
(317)228-3100

SAMPLE ANALYTE COUNT

Project: RETORTED PHOSPHOR POWDER
Pace Project No.: 50283639

Lab ID	Sample ID	Method	Analysts	Analytes Reported	Laboratory
50283639001	**469148H Ocala Pre**	EPA 7470	LBT	1	PASI-I

PASI-I = Pace Analytical Services - Indianapolis

This report shall not be reproduced, except in full,
without the written consent of Pace Analytical Services, LLC.

Pace Analytical Services, LLC
7726 Moller Road
Indianapolis, IN 46268
(317)228-3100

SUMMARY OF DETECTION

Project: RETORTED PHOSPHOR POWDER
Pace Project No.: 50283639

Lab Sample ID Method	Client Sample ID Parameters	Result	Units	Report Limit	Analyzed	Qualifiers
50283639001	**469148H Ocala Pre**					
EPA 7470	Mercury	0.37	mg/L	0.10	04/05/21 22:58	

This report shall not be reproduced, except in full,
without the written consent of Pace Analytical Services, LLC.

Pace Analytical Services, LLC
7726 Moller Road
Indianapolis, IN 46268
(317)228-3100

ANALYTICAL RESULTS

Project: RETORTED PHOSPHOR POWDER
Pace Project No.: 50283639

Sample: 469148H Ocala Pre **Lab ID: 50283639001** Collected: 03/30/21 08:00 Received: 03/31/21 13:25 Matrix: Solid

Results reported on a "wet-weight" basis

Parameters	Results	Units	Report Limit	DF	Prepared	Analyzed	CAS No.	Qual
7470 Mercury, TCLP	Analytical Method: EPA 7470 Preparation Method: EPA 7470 Leachate Method/Date: EPA 1311; 04/01/21 16:00 Initial pH: 9.27; Final pH: 5.76 Pace Analytical Services - Indianapolis							
Mercury	**0.37**	mg/L	0.10	50	04/05/21 09:27	04/05/21 22:58	7439-97-6	

This report shall not be reproduced, except in full,
without the written consent of Pace Analytical Services, LLC.

Pace Analytical Services, LLC
7726 Moller Road
Indianapolis, IN 46268
(317)228-3100

QUALITY CONTROL DATA

Project: RETORTED PHOSPHOR POWDER
Pace Project No.: 50283639

QC Batch: 613672
QC Batch Method: EPA 7470
Analysis Method: EPA 7470
Analysis Description: 7470 Mercury TCLP
Laboratory: Pace Analytical Services - Indianapolis
Associated Lab Samples: 50283639001

METHOD BLANK: 2828028
Matrix: Water
Associated Lab Samples: 50283639001

Parameter	Units	Blank Result	Reporting Limit	Analyzed	Qualifiers
Mercury	mg/L	ND	0.00067	04/05/21 20:36	

LABORATORY CONTROL SAMPLE: 2828029

Parameter	Units	Spike Conc.	LCS Result	LCS % Rec	% Rec Limits	Qualifiers
Mercury	mg/L	0.005	0.0048	96	80-120	

MATRIX SPIKE SAMPLE: 2828037

Parameter	Units	50283637003 Result	Spike Conc.	MS Result	MS % Rec	% Rec Limits	Qualifiers
Mercury	mg/L	0.018	0.015	0.036	119	75-125	

MATRIX SPIKE SAMPLE: 2828038

Parameter	Units	50283639001 Result	Spike Conc.	MS Result	MS % Rec	% Rec Limits	Qualifiers
Mercury	mg/L	0.37	0.015	0.36	-78	75-125	P6

Results presented on this page are in the units indicated by the "Units" column except where an alternate unit is presented to the right of the result.

REPORT OF LABORATORY ANALYSIS

This report shall not be reproduced, except in full,
without the written consent of Pace Analytical Services, LLC.

Pace Analytical Services, LLC
7726 Moller Road
Indianapolis, IN 46268
(317)228-3100

QUALIFIERS

Project: RETORTED PHOSPHOR POWDER
Pace Project No.: 50283639

DEFINITIONS

DF - Dilution Factor, if reported, represents the factor applied to the reported data due to dilution of the sample aliquot.

ND - Not Detected at or above adjusted reporting limit.

TNTC - Too Numerous To Count

J - Estimated concentration above the adjusted method detection limit and below the adjusted reporting limit.

MDL - Adjusted Method Detection Limit.

PQL - Practical Quantitation Limit.

RL - Reporting Limit - The lowest concentration value that meets project requirements for quantitative data with known precision and bias for a specific analyte in a specific matrix.

S - Surrogate

1,2-Diphenylhydrazine decomposes to and cannot be separated from Azobenzene using Method 8270. The result for each analyte is a combined concentration.

Consistent with EPA guidelines, unrounded data are displayed and have been used to calculate % recovery and RPD values.

LCS(D) - Laboratory Control Sample (Duplicate)

MS(D) - Matrix Spike (Duplicate)

DUP - Sample Duplicate

RPD - Relative Percent Difference

NC - Not Calculable.

SG - Silica Gel - Clean-Up

U - Indicates the compound was analyzed for, but not detected.

N-Nitrosodiphenylamine decomposes and cannot be separated from Diphenylamine using Method 8270. The result reported for each analyte is a combined concentration.

Pace Analytical is TNI accredited. Contact your Pace PM for the current list of accredited analytes.

TNI - The NELAC Institute.

ANALYTE QUALIFIERS

P6 Matrix spike recovery was outside laboratory control limits due to a parent sample concentration notably higher than the spike level.

This report shall not be reproduced, except in full,
without the written consent of Pace Analytical Services, LLC.

Pace Analytical Services, LLC
7726 Moller Road
Indianapolis, IN 46268
(317)228-3100

QUALITY CONTROL DATA CROSS REFERENCE TABLE

Project: RETORTED PHOSPHOR POWDER
Pace Project No.: 50283639

Lab ID	Sample ID	QC Batch Method	QC Batch	Analytical Method	Analytical Batch
50283639001	**469148H Ocala Pre**	EPA 7470	613672	EPA 7470	614030

This report shall not be reproduced, except in full,
without the written consent of Pace Analytical Services, LLC.

WO# : 50283639

50283639

Samples Submitted to: [x] Pace Analytical, 7726 Moller Rd., Indianapolis, IN 46268, 317-228-3100 [ ]

Chain of Custody Record

No. 53-15501

Client Name:	Lighting Resources, LLC	Project Name:	RETORTED PHOSPHOR POWDER	Turnaround Time	Report Type
Address:	498 Park 800 Drive	Location:	n/a	[ ] Routine (7 working days)	[x] Results Only [ ] Level II
City, State, Zip	Greenwood, IN, 46143	PO #:	n/a	[x] RUSH* (notify lab)	[ ] Level III [ ] Level III CLP-like
Contact:	Chris Mobley	Compliance Monitoring?	[ ] YES [x] NO	*72 hours*	[ ] Level IV [ ] Level IV CLP-like
Telephone:	317-888-3889	(1) Agency/Program:		*(needed by)	[ ] EDD
Sampled By:	Rick Miller	Sampler Signature:	Rick Miller		

* **Matrix Types:** Soil/Solid (S), Sludge, Oil, Wipe Drinking Water (DW), Groundwater (GW), Surface Water (SW), Waste Water (WW), Other (specify)
** **Preservative Types:** (1) HNO3, H2SO4, (3) HCl, (4) NaOH, (5) Zinc Acetate, (6) Methanol, (7) Sodium Bisulfate, (8) Sodium Thiosulfate, (9) Hexane, (U) Unpreserved

Client Sample ID	Matrix*	Grab	Composite	Filtered	Date Collected	Time Collected	No. of Containers	Requested Analyses → / Preservative Types ** ↓		TCLP (Hg)	Total Metals (Hg)	Dosimeters	Total Metals (RCRA 8)	Chemical Composition	PCB PPM	SODIUM	For Lab Use Only
469148H Ocala Pre	S	X			3/30/2021	0800	1	U		X	X						

Possible Hazard Identification [x] Hazardous [ ] Non-Hazardous [ ] Radioactive

Sample Disposition [ ] Dispose as appropriate [x] Return [ ] Archive

Comments	Relinquished by (signature)	Date/Time	Received By (signature)	Date/Time
	[signature]	3/31/2021 11:37 AM	[signature]	3/31/21 1137
** 72 hr Turnaround **	Relinquished by (signature) [signature]	Date/Time 3/31/21 1325	Received By (signature) [signature]	Date/Time 3/31/21 1325
	Relinquished by (signature)	Date/Time	Received By (signature)	Date/Time

Sample temperature upon receipt in degrees C = 4.0/4.2

F-IN-Q-290-rev.21, 02Feb2021

Pace Analytical®

SAMPLE CONDITION UPON RECEIPT FORM

Date/Time and Initials of person examining contents: DAP 3/31/21 1438

1. **Courier:** ☐ FED EX ☐ UPS ☐ CLIENT ☑ PACE ☐ USPS ☐ OTHER _____
2. **Custody Seal on Cooler/Box Present:** ☐ Yes ☑ No
   (If yes)Seals Intact: ☐ Yes ☐ No **(leave blank if no seals were present)**
3. **Thermometer:** 1 2 3 4 5 6 A B C D E F
4. **Cooler Temperature:** 4.0/4.2
   Temp should be above freezing to 6°C **(Initial/Corrected)**
5. **Packing Material:** ☐ Bubble Wrap ☐ Bubble Bags ☑ None ☐ Other _____
6. **Ice Type:** ☑ Wet ☐ Blue ☐ None
7. **If temp. is over 6°C or under 0°C, was the PM notified?:** ☐ Yes ☐ No

All discrepancies will be written out in the comments section below.

	Yes	No		Yes	No	N/A
USDA Regulated Soils? (HI, ID, NY, WA, OR,CA, NM, TX, OK, AR, LA, TN, AL, MS, NC, SC, GA, FL, or Puerto Rico)		✓	All containers needing acid/base pres. Have been CHECKED?: **exceptions: VOA, coliform, LLHg, O&G, and any container with a septum cap or preserved with HCl.** **Circle:** **HNO3 (<2) H2SO4 (<2) NaOH (>10) NaOH/ZnAc (>9)** Any non-conformance to pH recommendations will be noted on the container count form			✓
Short Hold Time Analysis (48 hours or less)? Analysis:		✓				
Time 5035A TC placed in Freezer or Short Holds To Lab	Time:			Present	Absent	N/A
			Residual Chlorine Check (SVOC 625 Pest/PCB 608)			✓
Rush TAT Requested (4 days or less): 3 Days	✓		Residual Chlorine Check (Total/Amenable/Free Cyanide)			✓
Custody Signatures Present?	✓		Headspace Wisconsin Sulfide?			✓
				Present	Absent	No VOA Vials Sent
Containers Intact?:	✓		Headspace in VOA Vials (>6mm): See Containter Count form for details			✓
Sample Label (IDs/Dates/Times) Match COC?: Except TCs, which only require sample ID	✓		Trip Blank Present?		✓	
Extra labels on Terracore Vials? (soils only)		✓	Trip Blank Custody Seals?:			✓

COMMENTS:

COC PAGE 1 of 1

Sample Container Count

Sample Line Item	WGFU	SBS DI BK Kit R	DG9H VG9H	VOA VIAL HS (>6mm)	VG9U	DG9U	DG9T	AG0U	AG1H	AG1U	AG3S	AG3C	BP1U	BP1N	BP2U	BP3U	BP3N	BP3F	BP3S	BP3B	BP3Z	CG3H	WGKU			Matrix	pH <2	pH >9	pH>10
1																							1			SL			
2																													
3																													
4																													
5																													
6																													
7																													
8																													
9																													
10																													
11																													
12																													

Container Codes

Glass

DG9B	40mL Na Bisulfate amber vial	AG0U	100mL unpres amber glass
DG9H	40mL HCl amber voa vial	AG1H	1L HCl amber glass
DG9M	40mL MeOH clear vial	AG1S	1L H2SO4 amber glass
DG9P	40mL TSP amber vial	AG1T	1L Na Thiosulfate amber glass
DG9S	40mL H2SO4 amber vial	AG1U	1liter unpres amber glass
DG9T	40mL Na Thio amber vial	AG2N	500mL HNO3 amber glass
DG9U	40mL unpreserved **amber** vial	AG2S	500mL H2SO4 amber glass
VG9H	40mL HCl clear vial	AG2U	500mL unpres amber glass
VG9T	40mL Na Thio. clear vial	AG3S	250mL H2SO4 amber glass
VG9U	40mL unpreserved **clear** vial	AG3U	250mL unpres amber glass
VGFX	40mL w/hexane wipe vial	AG3C	250mL NaOH amber glass
VSG	Headspace septa vial & HCl	BG1H	1L HCl clear glass
WGKU	8oz unpreserved clear jar	BG1S	1L H2SO4 clear glass
WGFU	4oz clear soil jar	BG1T	1L Na Thiosulfate clear glass
JGFU	4oz unpreserved amber wide	BG1U	1L unpreserved glass
CG3H	250mL clear glass HCl	BG3H	250mL HCl Clear Glass

Plastic / Misc.

BG3U	250mL Unpres Clear Glass
BP1A	1L NaOH, Asc Acid plastic
BP1N	1L HNO3 plastic
BP1S	1L H2SO4 plastic
BP1U	1L unpreserved plastic
BP1Z	1L NaOH, Zn, Ac
BP2A	500mL NaOH, Asc Acid plastic
BP2N	500mL HNO3 plastic
BP2O	500mL NaOH plastic
BP2S	500mL H2SO4 plastic
BP2U	500mL unpreserved plastic
BP2Z	500mL NaOH, Zn Ac
BP3B	250mL NaOH plastic
BP3N	250mL HNO3 plastic
BP3F	250mL HNO3 plastic (field filtered)
BP3U	250mL unpreserved plastic
BP3S	250mL H2SO4 plastic
BP3Z	250mL NaOH, Zn Ac plastic

AF	Air Filter
C	Air Cassettes
R	Terra core kit
SP5T	120mL Coliform Na Thiosulfate
U	Summa Can
ZPLC	Ziploc Bag

WT	Water
SL	Solid
NAL	Non-aqueous liquid
WP	Wipe

Pace Analytical Services, LLC
7726 Moller Road
Indianapolis, IN 46268
(317)228-3100

April 13, 2021

Mr. Rick Miller
Lighting Resources, Inc.
498 Park 800 Drive
Greenwood, IN 46143

RE: Project: RETORTED PHOSPHOR POWDER
Pace Project No.: 50284147

Dear Mr. Miller:

Enclosed are the analytical results for sample(s) received by the laboratory on April 07, 2021. The results relate only to the samples included in this report. Results reported herein conform to the applicable TNI/NELAC Standards and the laboratory's Quality Manual, where applicable, unless otherwise noted in the body of the report.

The test results provided in this final report were generated by each of the following laboratories within the Pace Network:

- Pace Analytical Services - Indianapolis

If you have any questions concerning this report, please feel free to contact me.

Sincerely,

Olivia Deck
olivia.deck@pacelabs.com
(317)228-3102
Project Manager

Enclosures

cc: Mr. Dan Gillespie, Lighting Resources, Inc.
Chris Mobley, Lighting Resources, LLC

REPORT OF LABORATORY ANALYSIS

This report shall not be reproduced, except in full,
without the written consent of Pace Analytical Services, LLC.

Pace Analytical Services, LLC
7726 Moller Road
Indianapolis, IN 46268
(317)228-3100

CERTIFICATIONS

Project: RETORTED PHOSPHOR POWDER
Pace Project No.: 50284147

Pace Analytical Services Indianapolis

7726 Moller Road, Indianapolis, IN 46268
Illinois Accreditation #: 200074
Indiana Drinking Water Laboratory #: C-49-06
Kansas/TNI Certification #: E-10177
Kentucky UST Agency Interest #: 80226
Kentucky WW Laboratory ID #: 98019
Michigan Drinking Water Laboratory #9050
Ohio VAP Certified Laboratory #: CL0065
Oklahoma Laboratory #: 9204
Texas Certification #: T104704355
Wisconsin Laboratory #: 999788130
USDA Soil Permit #: P330-19-00257

This report shall not be reproduced, except in full,
without the written consent of Pace Analytical Services, LLC.

Pace Analytical Services, LLC
7726 Moller Road
Indianapolis, IN 46268
(317)228-3100

SAMPLE SUMMARY

Project: RETORTED PHOSPHOR POWDER
Pace Project No.: 50284147

Lab ID	Sample ID	Matrix	Date Collected	Date Received
50284147001	**469148H Ocala Post**	Solid	04/06/21 07:00	04/07/21 13:10

This report shall not be reproduced, except in full,
without the written consent of Pace Analytical Services, LLC.

Pace Analytical Services, LLC
7726 Moller Road
Indianapolis, IN 46268
(317)228-3100

SAMPLE ANALYTE COUNT

Project: RETORTED PHOSPHOR POWDER
Pace Project No.: 50284147

Lab ID	Sample ID	Method	Analysts	Analytes Reported	Laboratory
50284147001	**469148H Ocala Post**	EPA 7470	LBT	1	PASI-I

PASI-I = Pace Analytical Services - Indianapolis

This report shall not be reproduced, except in full,
without the written consent of Pace Analytical Services, LLC.

Pace Analytical Services, LLC
7726 Moller Road
Indianapolis, IN 46268
(317)228-3100

SUMMARY OF DETECTION

Project: RETORTED PHOSPHOR POWDER
Pace Project No.: 50284147

Lab Sample ID Method	Client Sample ID Parameters	Result	Units	Report Limit	Analyzed	Qualifiers
50284147001	**469148H Ocala Post**					
EPA 7470	Mercury	0.012	mg/L	0.0020	04/12/21 19:43	

This report shall not be reproduced, except in full,
without the written consent of Pace Analytical Services, LLC.

Pace Analytical Services, LLC
7726 Moller Road
Indianapolis, IN 46268
(317)228-3100

ANALYTICAL RESULTS

Project: RETORTED PHOSPHOR POWDER
Pace Project No.: 50284147

Sample: 469148H Ocala Post **Lab ID: 50284147001** Collected: 04/06/21 07:00 Received: 04/07/21 13:10 Matrix: Solid

Results reported on a "wet-weight" basis

Parameters	Results	Units	Report Limit	DF	Prepared	Analyzed	CAS No.	Qual
7470 Mercury, TCLP	Analytical Method: EPA 7470 Preparation Method: EPA 7470 Leachate Method/Date: EPA 1311; 04/08/21 15:25 Initial pH: 9.72; Final pH: 6.02 Pace Analytical Services - Indianapolis							
Mercury	**0.012**	mg/L	0.0020	1	04/12/21 10:26	04/12/21 19:43	7439-97-6	

This report shall not be reproduced, except in full,
without the written consent of Pace Analytical Services, LLC.

Pace Analytical Services, LLC
7726 Moller Road
Indianapolis, IN 46268
(317)228-3100

QUALITY CONTROL DATA

Project: RETORTED PHOSPHOR POWDER
Pace Project No.: 50284147

QC Batch: 614989
QC Batch Method: EPA 7470
Analysis Method: EPA 7470
Analysis Description: 7470 Mercury TCLP
Laboratory: Pace Analytical Services - Indianapolis
Associated Lab Samples: 50284147001

METHOD BLANK: 2834379 Matrix: Water
Associated Lab Samples: 50284147001

Parameter	Units	Blank Result	Reporting Limit	Analyzed	Qualifiers
Mercury	mg/L	ND	0.00067	04/12/21 19:24	

LABORATORY CONTROL SAMPLE: 2834380

Parameter	Units	Spike Conc.	LCS Result	LCS % Rec	% Rec Limits	Qualifiers
Mercury	mg/L	0.005	0.0050	100	80-120	

MATRIX SPIKE & MATRIX SPIKE DUPLICATE: 2834381 2834382

Parameter	Units	50283753002 Result	MS Spike Conc.	MSD Spike Conc.	MS Result	MSD Result	MS % Rec	MSD % Rec	% Rec Limits	RPD	Max RPD	Qual
Mercury	mg/L	0.010	0.015	0.015	0.023	0.024	85	90	75-125	3	20	

MATRIX SPIKE SAMPLE: 2834383

Parameter	Units	50284147001 Result	Spike Conc.	MS Result	MS % Rec	% Rec Limits	Qualifiers
Mercury	mg/L	0.012	0.015	0.026	91	75-125	

MATRIX SPIKE SAMPLE: 2834384

Parameter	Units	50284148002 Result	Spike Conc.	MS Result	MS % Rec	% Rec Limits	Qualifiers
Mercury	mg/L	0.0092	0.015	0.023	93	75-125	

MATRIX SPIKE SAMPLE: 2834385

Parameter	Units	50284150002 Result	Spike Conc.	MS Result	MS % Rec	% Rec Limits	Qualifiers
Mercury	mg/L	0.085	0.015	0.094	59	75-125	M0

Results presented on this page are in the units indicated by the "Units" column except where an alternate unit is presented to the right of the result.

REPORT OF LABORATORY ANALYSIS

This report shall not be reproduced, except in full,
without the written consent of Pace Analytical Services, LLC.

Pace Analytical Services, LLC
7726 Moller Road
Indianapolis, IN 46268
(317)228-3100

QUALITY CONTROL DATA

Project: RETORTED PHOSPHOR POWDER
Pace Project No.: 50284147

MATRIX SPIKE SAMPLE: 2834386

Parameter	Units	50284122001 Result	Spike Conc.	MS Result	MS % Rec	% Rec Limits	Qualifiers
Mercury	mg/L	ND	0.015	0.016	98	75-125	

MATRIX SPIKE SAMPLE: 2834387

Parameter	Units	50284158001 Result	Spike Conc.	MS Result	MS % Rec	% Rec Limits	Qualifiers
Mercury	mg/L	0.0022	0.015	0.016	93	75-125	

MATRIX SPIKE SAMPLE: 2834388

Parameter	Units	50284047005 Result	Spike Conc.	MS Result	MS % Rec	% Rec Limits	Qualifiers
Mercury	mg/L	0.0014J	0.015	0.016	97	75-125	

Results presented on this page are in the units indicated by the "Units" column except where an alternate unit is presented to the right of the result.

REPORT OF LABORATORY ANALYSIS

This report shall not be reproduced, except in full,
without the written consent of Pace Analytical Services, LLC.

Pace Analytical Services, LLC
7726 Moller Road
Indianapolis, IN 46268
(317)228-3100

QUALIFIERS

Project: RETORTED PHOSPHOR POWDER
Pace Project No.: 50284147

DEFINITIONS

DF - Dilution Factor, if reported, represents the factor applied to the reported data due to dilution of the sample aliquot.

ND - Not Detected at or above adjusted reporting limit.

TNTC - Too Numerous To Count

J - Estimated concentration above the adjusted method detection limit and below the adjusted reporting limit.

MDL - Adjusted Method Detection Limit.

PQL - Practical Quantitation Limit.

RL - Reporting Limit - The lowest concentration value that meets project requirements for quantitative data with known precision and bias for a specific analyte in a specific matrix.

S - Surrogate

1,2-Diphenylhydrazine decomposes to and cannot be separated from Azobenzene using Method 8270. The result for each analyte is a combined concentration.

Consistent with EPA guidelines, unrounded data are displayed and have been used to calculate % recovery and RPD values.

LCS(D) - Laboratory Control Sample (Duplicate)

MS(D) - Matrix Spike (Duplicate)

DUP - Sample Duplicate

RPD - Relative Percent Difference

NC - Not Calculable.

SG - Silica Gel - Clean-Up

U - Indicates the compound was analyzed for, but not detected.

N-Nitrosodiphenylamine decomposes and cannot be separated from Diphenylamine using Method 8270. The result reported for each analyte is a combined concentration.

Pace Analytical is TNI accredited. Contact your Pace PM for the current list of accredited analytes.

TNI - The NELAC Institute.

ANALYTE QUALIFIERS

M0 Matrix spike recovery and/or matrix spike duplicate recovery was outside laboratory control limits.

This report shall not be reproduced, except in full,
without the written consent of Pace Analytical Services, LLC.

Pace Analytical Services, LLC
7726 Moller Road
Indianapolis, IN 46268
(317)228-3100

QUALITY CONTROL DATA CROSS REFERENCE TABLE

Project: RETORTED PHOSPHOR POWDER
Pace Project No.: 50284147

Lab ID	Sample ID	QC Batch Method	QC Batch	Analytical Method	Analytical Batch
50284147001	**469148H Ocala Post**	EPA 7470	614989	EPA 7470	615144

This report shall not be reproduced, except in full,
without the written consent of Pace Analytical Services, LLC.

WO# : 50284147
50284147

[x] Pace Analytical
7726 Moller Rd.
Indianapolis, IN 46268
317-228-3100
[ ]

Chain of Custody Record

No. 53-15503

Client Name:	Lighting Resources, LLC	Project Name:	RETORTED PHOSPHOR POWDER	Turnaround Time	Report Type
Address:	498 Park 800 Drive	Location:	n/a	[ ] Routine (7 working days)	[x] Results Only [ ] Level II
City, State, Zip	Greenwood, IN, 46143	PO #:	n/a	[x] RUSH* (notify lab)	[ ] Level III [ ] Level III CLP-like
Contact:	Chris Mobley	Compliance Monitoring?	[ ] YES [x] NO	*72 hours*	[ ] Level IV [ ] Level IV CLP-like
Telephone:	317-888-3889	(1) Agency/Program:		*(needed by)	[ ] EDD
Sampled By:	Rick Miller	Sampler Signature:	Rick Miller		

* **Matrix Types:** Soil/Solid (S), Sludge, Oil, Wipe Drinking Water (DW), Groundwater (GW), Surface Water (SW), Waste Water (WW), Other (specify)
** **Preservative Types:** (1) HNO3, H2SO4, (3) HCl, (4) NaOH, (5) Zinc Acetate, (6) Methanol, (7) Sodium Bisulfate, (8) Sodium Thiosulfate, (9) Hexane, (U) Unpreserved

Client Sample ID	Matrix*	Grab	Composite	Filtered	Date Collected	Time Collected	No. of Containers	Requested Analyses → / Preservative Types ** ↓		TCLP (Hg)	Total Metals (Hg)	Dosimeters	Total Metals (RCRA 8)	Chemical Composition	PCB PPM	SODIUM	For Lab Use Only
469148H Ocala Post	S	X			4/6//2021	0700	1	U		X							001

Possible Hazard Identification [x] Hazardous [ ] Non-Hazardous [ ] Radioactive

Sample Disposition [ ] Dispose as appropriate [x] Return [ ] Archive

Comments	Relinquished by (signature)	Date/Time	Received By (signature)	Date/Time
	Leah Hinte	4/7/21 10:35	Pace	4/7/21 1035
** 72 hr Turnaround **	Relinquished by (signature)	Date/Time	Received By (signature)	Date/Time
	Pace	4/7/21 1310	R. Clemmons	4-7-21 13:10
	Relinquished by (signature)	Date/Time	Received By (signature)	Date/Time
Sample temperature upon receipt in degrees C =				

F-IN-Q-290-rev.21, 02Feb2021

Pace Analytical®

SAMPLE CONDITION UPON RECEIPT FORM

Date/Time and Initials of person examining contents: RC 4-7-12 14:36

1. **Courier:** ☐ FED EX ☐ UPS ☐ CLIENT ☑ PACE ☐ USPS ☐ OTHER _____
2. **Custody Seal on Cooler/Box Present:** ☐ Yes ☑ No
   (If yes)Seals Intact: ☐ Yes ☐ No **(leave blank if no seals were present)**
3. **Thermometer:** 1 2 3 4 5 6 A B C D E F
4. **Cooler Temperature:** 0.2/0.2
   Temp should be above freezing to 6°C **(Initial/Corrected)**
5. **Packing Material:** ☐ Bubble Wrap ☐ Bubble Bags ☑ None ☐ Other _____
6. **Ice Type:** ☑ Wet ☐ Blue ☐ None
7. **If temp. is over 6°C or under 0°C, was the PM notified?:** ☐ Yes ☐ No

All discrepancies will be written out in the comments section below.

	Yes	No		Yes	No	N/A
USDA Regulated Soils? (HI, ID, NY, WA, OR,CA, NM, TX, OK, AR, LA, TN, AL, MS, NC, SC, GA, FL, or Puerto Rico)		✓	All containers needing acid/base pres. Have been CHECKED?: **exceptions: VOA, coliform, LLHg, O&G, and any container with a septum cap or preserved with HCl.** **Circle:** **HNO3 (<2) H2SO4 (<2) NaOH (>10) NaOH/ZnAc (>9)** Any non-conformance to pH recommendations will be noted on the container count form			✓
Short Hold Time Analysis (48 hours or less)? Analysis:		✓				
Time 5035A TC placed in Freezer or Short Holds To Lab	Time:			Present	Absent	N/A ✓
			Residual Chlorine Check (SVOC 625 Pest/PCB 608)			✓
Rush TAT Requested (4 days or less): 3 day	✓		Residual Chlorine Check (Total/Amenable/Free Cyanide)			✓
Custody Signatures Present?	✓		Headspace Wisconsin Sulfide?			✓
Containers Intact?:	✓		Headspace in VOA Vials (>6mm): See Containter Count form for details	Present	Absent	No VOA Vials Sent ✓
Sample Label (IDs/Dates/Times) Match COC?: Except TCs, which only require sample ID	✓		Trip Blank Present?		✓	
Extra labels on Terracore Vials? (soils only)		✓	Trip Blank Custody Seals?:			✓

COMMENTS:

COC PAGE ____ of ____

Sample Container Count

Sample Line Item	WGKU	SBS DI BK Kit R	DG9H VG9H	VOA VIAL HS (>6mm)	VG9U	DG9U	DG9T	AG0U	AG1H	AG1U	AG3S	AG3C	BP1U	BP1N	BP2U	BP3U	BP3N	BP3F	BP3S	BP3B	BP3Z	CG3H				Matrix	pH <2	pH >9	pH>10
1	1																									SL			
2																													
3																													
4																													
5																													
6																													
7																													
8																													
9																													
10																													
11																													
12																													

Container Codes

Glass

DG9B	40mL Na Bisulfate amber vial	AG0U	100mL unpres amber glass
DG9H	40mL HCl amber voa vial	AG1H	1L HCl amber glass
DG9M	40mL MeOH clear vial	AG1S	1L H2SO4 amber glass
DG9P	40mL TSP amber vial	AG1T	1L Na Thiosulfate amber glass
DG9S	40mL H2SO4 amber vial	AG1U	1liter unpres amber glass
DG9T	40mL Na Thio amber vial	AG2N	500mL HNO3 amber glass
DG9U	40mL unpreserved **amber** vial	AG2S	500mL H2SO4 amber glass
VG9H	40mL HCl clear vial	AG2U	500mL unpres amber glass
VG9T	40mL Na Thio. clear vial	AG3S	250mL H2SO4 amber glass
VG9U	40mL unpreserved **clear** vial	AG3U	250mL unpres amber glass
VGFX	40mL w/hexane wipe vial	AG3C	250mL NaOH amber glass
VSG	Headspace septa vial & HCl	BG1H	1L HCl clear glass
WGKU	8oz unpreserved clear jar	BG1S	1L H2SO4 clear glass
WGFU	4oz clear soil jar	BG1T	1L Na Thiosulfate clear glass
JGFU	4oz unpreserved amber wide	BG1U	1L unpreserved glass
CG3H	250mL clear glass HCl	BG3H	250mL HCl Clear Glass

Plastic / Misc.

BG3U	250mL Unpres Clear Glass
BP1A	1L NaOH, Asc Acid plastic
BP1N	1L HNO3 plastic
BP1S	1L H2SO4 plastic
BP1U	1L unpreserved plastic
BP1Z	1L NaOH, Zn, Ac
BP2A	500mL NaOH, Asc Acid plastic
BP2N	500mL HNO3 plastic
BP2O	500mL NaOH plastic
BP2S	500mL H2SO4 plastic
BP2U	500mL unpreserved plastic
BP2Z	500mL NaOH, Zn Ac
BP3B	250mL NaOH plastic
BP3N	250mL HNO3 plastic
BP3F	250mL HNO3 plastic (field filtered)

BP3U	250mL unpreserved plastic
BP3S	250mL H2SO4 plastic
BP3Z	250mL NaOH, Zn Ac plastic

AF	Air Filter
C	Air Cassettes
R	Terra core kit
SP5T	120mL Coliform Na Thiosulfate
U	Summa Can
ZPLC	Ziploc Bag

WT	Water
SL	Solid
NAL	Non-aqueous liquid
WP	Wipe

Material Safety Data Sheet

Catalog Number: 76671
Revision date: 26-Apr-2006

1. IDENTIFICATION OF THE SUBSTANCE/PREPARATION AND COMPANY INFORMATION

Catalog Number: 76671

Product name: ES 7X® LABORATORY DETERGENT

Synonyms: 7X ES; 7X PF
Supplier:
MP Biomedicals, LLC
29525 Fountain Parkway
Solon, OH 44139
tel: 440-337-1200

Emergency telephone number: CHEMTREC: 1-800-424-9300 (1-703-527-3887)

2. COMPOSITION/INFORMATION ON INGREDIENTS

Components	CAS Number	Weight %	ACGIH Exposure Limits:	OSHA Exposure Limits:
WATER	7732-18-5	80 - 90%	None	None
Pentamethylenephosphonate heptasodium	22042-96-2	10 - 20%	None	None
DIOCTYL SULFOSUCCINATE SODIUM SALT	577-11-7	1 - 5%	None	None
Glycol Ether	112-34-5	1 - 5%	None	None

3. HAZARDS IDENTIFICATION

EMERGENCY OVERVIEW: Irritating to eyes

Category of Danger:
Irritant

Principle routes of exposure: Skin
Inhalation: May cause irritation of respiratory tract
Ingestion: May be harmful if swallowed.
Skin contact: May cause allergic skin reaction
Eye contact: Moderately irritating to the eyes

ANSI Classification Irritant - eye, mild
Statements of hazard CAUSES EYE IRRITATION.
Statement of Spill or Leak - ANSI Label Contain and/or absorb spill with inert material (e.g. sand, vermiculite), then place in suitable container. Do not flush to sewer or allow to enter waterways. Use appropriate Personal Protective Equipment.
Statement of First Aid In case of contact, immediately flush eyes or skin with plenty of water for at least 15 minutes while removing contaminated clothing and shoes. Wash clothing before reuse. Call a physician. If swallowed, do NOT induce vomiting unless directed to do so by medical personnel. Never give anything by mouth to an unconscious person. Call a physician. In case of contact, immediately flush eyes with plenty of water for at least 15 minutes. Call a physician. In case of contact, flush eyes with running water for at least 15 minutes. Consult a physician for irritation or any other symptom.

Precautions - ANSI Label Do not breathe vapors or spray mist Avoid contact with eyes Do not taste or swallow.

4. FIRST AID MEASURES

General advice: In the case of accident or if you feel unwell, seek medical advice immediately (show the label where possible).
Inhalation: Move to fresh air. Call a physician immediately.
Skin contact: Rinse immediately with plenty of water for at least 15 minutes Remove and wash contaminated clothing before re-use Call a physician immediately Consult a physician if necessary
Ingestion: If swallowed, seek medical advice immediately and show this container or label. Drink 1 or 2 glasses of water. Do not induce vomiting without medical advice. Never give anything by mouth to an unconscious person. Consult a physician
Eye contact: Flush eye(s) immediately with plenty of water. Rinse immediately with plenty of water, also under the eyelids, for at least 15 minutes. Rinse immediately with plenty of water, also under the eyelids. Call a physician immediately Rinse thoroughly with plenty of water for at least 15 minutes and consult a physician If symptoms persist, call a physician
Protection of first-aiders: No information available
Medical conditions aggravated by exposure: None known

5. FIRE FIGHTING MEASURES

Suitable extinguishing media:	Use dry chemical, CO_2, water spray or `alcohol` foam., Use dry chemical, CO_2, water spray or "alcohol" foam, Use media appropriate for the surrounding fire.
Specific hazards:	Burning produces irritant fumes.
Unusual hazards:	None known
Special protective equipment for firefighters:	Wear self contained breathing apparatus for fire fighting if necessary. In the event of fire and/or explosion do not breathe fumes.
Specific methods:	Water mist may be used to cool closed containers.
Flash point:	Not determined
Autoignition temperature:	Not determined

NFPA rating:

NFPA Health:	0
NFPA Flammability:	0
NFPA Reactivity:	0

6. ACCIDENTAL RELEASE MEASURES

Personal precautions:	Use personal protective equipment. Remove all sources of ignition.
Environmental precautions:	Do not flush into surface water or sanitary sewer system.
Methods for cleaning up:	Soak up with inert absorbent material.

7. HANDLING AND STORAGE

Storage:
ROOM TEMPERATURE

Handling:	Use only in area provided with appropriate exhaust ventilation.
Safe handling advice:	Wear personal protective equipment. Remove and wash contaminated clothing before reuse.
Technical measures/storage conditions:	Keep containers tightly closed in a cool, well-ventilated place.

Incompatible products: Oxidising and spontaneously flammable products

8. EXPOSURE CONTROLS / PERSONAL PROTECTION

Engineering measures: Ensure adequate ventilation, especially in confined areas.
PERSONAL PROTECTIVE EQUIPMENT
Respiratory protection: In case of mist, spray or aerosol exposure wear suitable personal respiratory protection and protective suit.
Hand protection: Pvc or other plastic material gloves
Skin and body protection: Impervious clothing Long sleeved clothing
Eye protection: If splashes are likely to occur, wear: Goggles Safety glasses with side-shields
Hygiene measures: Handle in accordance with good industrial hygiene and safety practice.

9. PHYSICAL AND CHEMICAL PROPERTIES

Appearance and Odor	Tan to yellowish-grey, Hazy
Physical state:	Liquid
Formula:	Not applicable
Melting point/range:	No data available at this time.
Boiling point/range:	No Data available at this time.
Density:	No data available
Vapor pressure:	No data available
Evaporation rate:	No data available
Vapor density:	No data available
Solubility (in water):	Soluble
Flash point:	Not determined
Autoignition temperature:	Not determined

10. STABILITY AND REACTIVITY

Stability:	Stable under recommended storage conditions.
Polymerization:	None under normal processing.
Hazardous decomposition products:	Thermal decomposition can lead to release of irritating gases and vapours such as carbon oxides.
Materials to avoid:	Strong oxidising agents
Conditions to avoid:	Exposure to air or moisture over prolonged periods.

11. TOXICOLOGICAL INFORMATION

Product Information
Acute toxicity

Components	**RTECS Number:**	**Selected LD50s and LC50s**
WATER	ZC0110000	Oral LD50 Rat = > 90 ml/kg
Pentamethylenephosphonate heptasodium	Not Available	Oral LD50 Rat : >5 gm/kg Dermal LD50 Rabbit : >5 gm/kg
DIOCTYL SULFOSUCCINATE SODIUM SALT	WN0525000	Oral LD50 Rat : 1900 mg/kg Oral LD50 Mouse : 2643 mg/kg
Glycol Ether	Not Available	Oral LD50 Rat : 5660 mg/kg Oral LD50 Mouse : 2400 mg/kg Dermal LD50 Rabbit : 2700 mg/kg

Chronic toxicity: Chronic exposure may cause nausea and vomiting, higher exposure causes unconsciousness.

Local effects: Symptoms of overexposure may be headache, dizziness, tiredness, nausea and vomiting.
Specific effects: May include moderate to severe erythema (redness) and moderate edema (raised skin), nausea, vomiting, headache.
Primary irritation: No data is available on the product itself.
Carcinogenic effects: No data is available on the product itself.
Mutagenic effects: No data is available on the product itself.
Reproductive toxicity: No data is available on the product itself.

12. ECOLOGICAL INFORMATION

Mobility: No data available
Bioaccumulation: No data available
Ecotoxicity effects: No data available
Aquatic toxicity: May cause long-term adverse effects in the aquatic environment.

Components	U.S. DOT - Appendix B - Marine Pollutan	U.S. DOT - Appendix B - Severe Marine Pollutants	United Kingdom - The Red List:
WATER	Not Listed	Not Listed	Not Listed
Pentamethylenephosphonate heptasodium	Not Listed	Not Listed	Not Listed
DIOCTYL SULFOSUCCINATE SODIUM SALT	Not Listed	Not Listed	Not Listed
Glycol Ether	Not Listed	Not Listed	Not Listed

Components	Germany VCI (WGK)	World Health Organization (WHO) - Drinking Water	Ecotoxicity - Fish Species Data
WATER	Not Listed	Not Listed	Not Listed
Pentamethylenephosphonate heptasodium	Not Listed	Not Listed	LC50 (96 hr) rainbow trout:>180 mg/L, <252 mg/L.:;LC50 (96 hr) bluegill sunfish:758 mg/L.:
DIOCTYL SULFOSUCCINATE SODIUM SALT	Not Listed	Not Listed	Not Listed
Glycol Ether	1	Not Listed	LC50 (96 hr) bluegill:1300 mg/L. Cond:Static, 23 °C.;LC50 (24 hr) goldfish:2700 mg/L.:

Components	Ecotoxicity - Freshwater Algae Data	Ecotoxicity - Microtox Data	Ecotoxicity - Water Flea Data
WATER	Not Listed	Not Listed	Not Listed
Pentamethylenephosphonate heptasodium	EC50 (96 hr) freshwater algae:2 mg/L.:	Not Listed	EC50 (48 hr) water flea:242 mg/L.:
DIOCTYL SULFOSUCCINATE SODIUM SALT	Not Listed	Not Listed	Not Listed
Glycol Ether	Not Listed	Not Listed	LC50 (24 hr) water flea:2850 mg/L.:

Components	EPA - ATSDR Priority List	EPA - HPV Challenge Program Chemical List	California - Priority Toxic Pollutants
WATER	Not Listed	Not Listed	Not Listed
Pentamethylenephosphonate heptasodium	Not Listed	indicator 4; Fully and ICCA sponsored	Not Listed
DIOCTYL SULFOSUCCINATE SODIUM SALT	Not Listed	indicator 4; Fully sponsored	Not Listed
Glycol Ether	Not Listed	indicator 2; Not sponsored	Not Listed

Components	California - Priority Toxic Pollutants	California - Priority Toxic Pollutants
WATER	Not Listed	Not Listed
Pentamethylenephosphonate heptasodium	Not Listed	Not Listed
DIOCTYL SULFOSUCCINATE SODIUM SALT	Not Listed	Not Listed
Glycol Ether	Not Listed	Not Listed

13. DISPOSAL CONSIDERATIONS

Waste from residues / unused products: Waste disposal must be in accordance with appropriate Federal, State, and local regulations. This product, if unaltered by use, may be disposed of by treatment at a permitted facility or as advised by your local hazardous waste regulatory authority. Residue from fires extinguished with this material may be hazardous.

Contaminated packaging: Do not re-use empty containers

Methods for cleaning up: Soak up with inert absorbent material.

14. TRANSPORT INFORMATION

UN/Id No: Not regulated

DOT:

Proper shipping name: Not Regulated

Components	U.S. DOT - Appendix A Table 1 - Reportable Quantities
WATER	Not Listed
Pentamethylenephosphonate heptasodium	Not Listed
DIOCTYL SULFOSUCCINATE SODIUM SALT	Not Listed
Glycol Ether	RQ = 1 pound (as glycol ethers)

TDG (Canada):

WHMIS hazard class: Non-controlled

IMDG/IMO

IMDG - Hazard Classifications Not Applicable

Components	U.S. DOT - Appendix B - Marine Pollutan	U.S. DOT - Appendix B - Severe Marine Pollutants
WATER	Not Listed	Not Listed
Pentamethylenephosphonate heptasodium	Not Listed	Not Listed
DIOCTYL SULFOSUCCINATE SODIUM SALT	Not Listed	Not Listed
Glycol Ether	Not Listed	Not Listed

IMO-labels:

15. REGULATORY INFORMATION

International Inventories

Components
WATER

Inventory - United States TSCA - Sect. 8(b)	Present
Canada DSL Inventory List -	Present
Australia (AICS):	Present
Inventory - China:	Present
EU EINECS List -	231-791-2; H2O
Korean KECL:	KE-35400
Philippines PICCS:	Present

Components
Pentamethylenephosphonate heptasodium

Inventory - United States TSCA - Sect. 8(b)	Present
Canada DSL Inventory List -	Present
Australia (AICS):	Present
Inventory - China:	Present
EU EINECS List -	244-751-4; C9H28N3O15P5.xNa
Korean KECL:	KE-28512
Philippines PICCS:	Present

Components
DIOCTYL SULFOSUCCINATE SODIUM SALT

Inventory - United States TSCA - Sect. 8(b)	Present
Canada DSL Inventory List -	Present
Australia (AICS):	Present
Inventory - China:	Present
EU EINECS List -	209-406-4; C20H38O7S.Na
Inventory - Japan:	2-1623
Korean KECL:	KE-32402
Philippines PICCS:	Present

Components
Glycol Ether

Inventory - United States TSCA - Sect. 8(b)	Present
Canada DSL Inventory List -	Present
Australia (AICS):	Present
Inventory - China:	Present
EU EINECS List -	203-961-6; C8H18O3
Inventory - Japan:	2-422; 7-97
Korean KECL:	KE-10466
Philippines PICCS:	Present

U.S. regulations:

Components	California Proposition 65 -	Massachusetts Right to Know List:	New Jersey Right to Know List:	Pennsylvania Right to Know List:
WATER	Not Listed	Not Listed	Not Listed	Not Listed
Pentamethylenephosphonate heptasodium	Not Listed	Not Listed	Not Listed	Not Listed
DIOCTYL SULFOSUCCINATE SODIUM SALT	Not Listed	Not Listed	Not Listed	Not Listed
Glycol Ether	Not Listed	Not Listed	Not Listed	environmental hazard

Components	Florida substance List:	Rhode Island Right to Know List:	Illinois - Toxic Air Contaminants	Connecticut - Hazardous Air Pollutants
WATER	Not Listed	Not Listed	Not Listed	Not Listed
Pentamethylenephosphonate heptasodium	Not Listed	Not Listed	Not Listed	Not Listed
DIOCTYL SULFOSUCCINATE SODIUM SALT	Not Listed	Not Listed	Not Listed	Not Listed
Glycol Ether	Not Listed	Not Listed	Not Listed	Not Listed

Components	SARA 313 Emission reporting/Toxic Release of Chemicals	CERCLA/SARA - Section 302 Extremely Haz	NTP:	IARC:
WATER	Not Listed	Not Listed	None	None
Pentamethylenephosphonate heptasodium	Not Listed	Not Listed	None	None
DIOCTYL SULFOSUCCINATE SODIUM SALT	Not Listed	Not Listed	None	None
Glycol Ether	form R reporting required for 1.0% de minimis concentration; Chemical Category N230; (applies to R-(OCH2CH2)n-OR'' ethers, where n = 1,2, or 3''; R=alkyl C7 or less or R = phenyl or alkyl subst. p	Not Listed	None	None

SARA 313 Notification: The above is your notification as to the SARA 313 listing for this product(s) pursuant to Section 313 of Title III of the Superfund Ammendments and Reauthorization Act of 1986 and 40 CFR Part 372.

If you are unsure if you are subject to the reporting requirements of Section 313, or need more information, please call the EPA Emergency Planning and Community Right-To-Know Information Hotline: (800) 535-0202 or (202) 479-2499 (in Washington, DC or Alaska).

State Notification: The above information is your notice as to the Right-to-Know listings of the stated product(s). Individual states will list chemicals for a variety of reasons including, but not limited to, the compounds toxicity; carcinogenic, tumorigenic and/or reproductive hazards; and the compounds environmental impact if accidentally released.

16. OTHER INFORMATION

Prepared by: Health & Safety

Disclaimer: The information and recommendations contained herein are based upon tests believed to be reliable. However, MP Biomedicals does not guarantee the accuracy or completeness NOR SHALL ANY OF THIS INFORMATION CONSTITUTE A WARRANTY, WHETHER EXPRESSED OR IMPLIED, AS TO THE SAFETY OF THE GOODS, THE MERCHANTABILITY OF THE GOODS, OR THE FITNESS OF THE GOODS FOR A PARTICULAR PURPOSE. Adjustment to conform to actual conditions of usage maybe required. MP Biomedicals assumes no responsibility for results obtained or for incidental or consequential damages, including lost profits arising from the use of these data. No warranty against infringement of any patent, copyright or trademark is made or implied.

End of Safety Data Sheet

SAFETY DATA SHEET

SECTION 1 — CHEMICAL AND COMPANY IDENTIFICATION

IDENTITY HgX Mercury Decontaminant Powder	**DATE PREPARED** 10/30/2017
CHEMICAL FAMILY Mixture	**USE** Decontaminating fine residue of mercury Recommended restrictions: None known.
SUPPLIER'S NAME Acton Technologies, Inc.	**EMERGENCY TELEPHONE NUMBER** CHEMTREC: 1-800-424-9300 (Within Continental U.S.) CHEMTREC: 1-703-527-3887 (Outside U.S.)

ACTON TECHNOLOGIES

DEKRA ISO 9001:2015 Certification #110102.01
ISO 14001:2015 Certification #140102.01

AN ISO 9001 CERTIFIED COMPANY
AN ISO 14001 CERTIFIED COMPANY

NORTH AMERICAN OPERATIONS	EUROPEAN OPERATIONS	
100 THOMPSON STREET ■ P.O. BOX 726 PITTSTON, PENNSYLVANIA ■18640 ■ USA PHONE: 570.654.0612 FAX:570.654.2810	ADARE ■ COUNTY LIMERICK IRELAND PHONE:+353.61.395.222 FAX:+353.61.395.333	VIA CARLO CATTANEO n° 76 ■ 25121 BRESCIA ■ ITALY PHONE: +39.030.2752447 FAX: +39.030.2750939

ONLINE ORDERING:
WWW.ACTONTECH.COM

SECTION 2 — HAZARDS IDENTIFICATION

CLASSIFICATION:	***Classification of the chemical:*** ***White granules or powder. Odorless.*** ***This material is not classified as hazardous under U.S. OSHA regulations (29CFR 1910.1200) (Hazcom 2012) and Canadian WHMIS regulations (Hazardous Products Regulations) (WHMIS 2015).***
SINGLE WORD:	Not required
HAZARD STATEMENT(S):	Not required
PRECAUTIONARY STATEMENT(S):	Not required
OTHER HAZARDS:	Other hazards which do not result in classification: Ingestion may cause gastrointestinal irritation, nausea, vomiting and diarrhea. Inhalation of dust may cause shortness of breath, tightness of the chest, a sore throat and cough. May cause eye irritation.

© 2018 Acton Technologies Inc. HgX® is a registered trademark of ACTON Technologies, Inc.

HgX®

SAFETY DATA SHEET

SECTION 3 — COMPOSITION/INFORMATION ON INGREDIENTS

CHEMICAL NAME	COMMON NAMES AND SYNONYMS	CAS #	WT. %
Ethylenediamine-tetraacetic acid (EDTA)	EDTA	60-00-4	5.0 - 10.0
The exact concentrations of the above listed chemicals are being withheld as a trade secret.			

SECTION 4 — FIRST AID MEASURES

INHALATION:	If inhaled, move to fresh air. If breathing is difficult, give oxygen by qualified medical personnel only. If breathing has stopped, give artificial respiration. Obtain medical attention if symptoms develop and persist.
SKIN CONTACT:	Wash with water and soap as a precaution. If irritation or symptoms develop, seek medical attention.
EYE CONTACT:	Flush with large amounts of water for 15 minutes. If irritation persists, seek prompt medical attention.
INGESTION:	Do NOT induce vomiting. Have victim rinse mouth with water, then give one to two glasses of water to drink. Never give anything by mouth to an unconscious person. Call a physician.
MOST IMPORTANT SYMPTOMS AND EFFECTS, BOTH ACUTE AND DELAYED:	Direct contact with eyes may cause temporary irritation. Symptoms may include tearing, redness and discomfort. Direct skin contact may cause slight or mild, transient irritation. Ingestion may cause gastrointestinal irritation, nausea, vomiting and diarrhea. Inhalation of dust may cause shortness of breath, tightness of the chest, a sore throat and cough.
INDICATION OF ANY IMMEDIATE MEDICAL ATTENTION AND SPECIAL TREATMENT NEEDED:	Treat symptomatically.

SECTION 5 — FIRE FIGHTING MEASURES

SUITABLE EXTINGUISHING MEDIA:	Use media suitable to the surrounding fire such as water fog or fine spray, alcohol foams, carbon dioxide and dry chemical.
UNSUITABLE EXTINGUISHING MEDIA:	Do not use a solid water stream as it may scatter and spread fire.
SPECIAL HAZARDS ARISING FROM THE SUBSTANCE OR MIXTURE / CONDITIONS OF FLAMMABILITY:	Burning may produce irritating, toxic and obnoxious fumes.
FLAMMABILITY CLASSIFICATION (OSHA 29 CFR 1910.106)	Not flammable.
HAZARDOUS COMBUSTION PRODUCTS:	Sodium oxides.
PROTECTIVE EQUIPMENT FOR FIRE-FIGHTERS:	Firefighters must use standard protective equipment including flame retardant coat, helmet with face shield, gloves, rubber boots, and in enclosed spaces, SCBA.
SPECIAL FIRE-FIGHTING PROCEDURES:	Firefighters should wear proper protective equipment and self-contained breathing apparatus with full face piece operated in positive pressure mode. Move containers from fire area if safe to do so. Water spray may be useful in cooling equipment exposed to heat and flame.

© 2018 Acton Technologies Inc. HgX® is a registered trademark of ACTON Technologies, Inc.

HgX®

SAFETY DATA SHEET

SECTION 6 — ACCIDENTAL RELEASE MEASURES

PERSONAL PRECAUTIONS, PROTECTIVE EQUIPMENT AND EMERGENCY PROCEDURES:	Restrict access to area until completion of clean-up. Ensure clean-up is conducted by trained personnel only. Wear suitable protective equipment. Refer to protective measures listed in sections 7 and 8. Restrict access to area until completion of clean-up.
ENVIRONMENTAL PRECAUTIONS:	Ensure spilled product does not enter drains, sewers, waterways, or confined spaces.
METHODS AND MATERIAL FOR CONTAINMENT AND CLEAN UP:	Stop spill or leak at source if safely possible. Avoid dust formation. Sweep up or vacuum up spillage and collect in suitable container for disposal.
SPECIAL SPILL RESPONSE PROCEDURES:	Contact appropriate local and provincial environmental authorities for assistance and/or reporting requirements. US CERCLA Reportable quantity (RQ): See section 15.

SECTION 7 — HANDLING AND STORAGE

PRECAUTIONS FOR SAFE HANDLING:	Avoid contact with eyes, skin and clothing. Avoid breathing dust and fume. Keep away from incompatibles. Keep containers tightly closed when not in use. Wash thoroughly after handling.
CONDITIONS FOR SAFE STORAGE:	Store in a cool, dry, well-ventilated area. Storage area should be clearly identified, clear of obstruction and accessible only to trained and authorized personnel. Routine housekeeping should be instituted to ensure that dusts do not accumulate on surfaces.
INCOMPATIBLE MATERIALS:	Oxidizing agents; Acids

SECTION 8 — EXPOSURE CONTROLS AND PERSONAL PROTECTION

EXPOSURE LIMITS:

CHEMICAL NAME	ACGIH TLV		OSHA PEL	
	TWA	STEL	PEL	STEL
Ethylenediamine-tetraacetic acid (EDTA)	N/Av	N/Av	N/Av	N/Av

VENTILATION AND ENGINEERING MEASURES:	Use in a well-ventilated area. Use general or local exhaust ventilation to maintain air concentrations below recommended exposure limits.
RESPIRATORY PROTECTION:	If the TLV is exceeded, a NIOSH/MSHA-approved respirator is advised. In case of insufficient ventilation wear suitable respiratory equipment. Advice should be sought from respiratory protection specialists.
SKIN PROTECTION:	Wear protective gloves. Advice should be sought from glove suppliers.
EYE / FACE PROTECTION:	Wear eye/face protection. Safety glasses with side-shields or chemical splash goggles, depending on workplace standards.
OTHER PROTECTIVE EQUIPMENT:	Wear sufficient clothing to prevent skin contact. Depending on conditions of use, an impervious apron should be worn. An eyewash station and safety shower should be made available in the immediate working area.
GENERAL HYGIENE CONSIDERATIONS:	Avoid breathing dust and fume. Avoid contact with skin, eyes and clothing.Upon completion of work, wash hands before eating, drinking, smoking or use of toilet facilities. Handle in accordance with good industrial hygiene and safety practice.

© 2018 Acton Technologies Inc. HgX® is a registered trademark of ACTON Technologies, Inc.

HgX®

SAFETY DATA SHEET

SECTION 9 — PHYSICAL AND CHEMICAL PROPERTIES

Appearance	White granules or powder.	**pH**	Not available.
Odor	Odorless	**Odor threshold**	N/Av
Initial Boiling point and Boiling Range	Not available.	**Relative Density/Specific gravity**	> 1
Melting/Freezing point	Not available.	**Partition coefficient: n-octanol/water or Coefficient of water/oil distribution**	N/Av
Vapor pressure	Not available.	**Solubility in water**	Soluble.
Vapor density	Not available.	**Other Solubility(ies)**	Not available.
Volatile organic Compounds (VOC's)	N/Av	**Evaporation rate (BuAe = 1)**	Not available.
Decomposition Temperature	Not available.	**Volatiles (% by weight)**	Not available.
Flame Projection Length	N/Ap	**Auto ignition temperature**	Not applicable.
Flash point	Not applicable. (Does not burn)	**Flammability (Solid/Gas)**	Not applicable.
Flash point (Method)	N/Ap	**Lower flammable limit (% by vol.)**	N/Ap
Oxidizing properties	Not applicable.	**Upper flammable limit (% by vol.)**	N/Ap
Viscosity	Not available.	**Explosive properties**	Not applicable.
Other physical/chemical properties	None known or reported by the manufacturer.	**Absolute pressure of container**	N/Ap

SECTION 10 — STABILITY AND REACTIVITY

REACTIVITY:	This product is not reactive.
CHEMICAL STABILITY:	Material is stable under normal conditions.
POSSIBILITY OF HAZARDOUS REACTION:	No dangerous reaction known under conditions of normal use.
CONDITIONS TO AVOID:	Avoid contact with incompatible materials. Do not use in areas without adequate ventilation. Avoid dust formation. Extremes of temperature and direct sunlight.
INCOMPATIBILE MATERIALS:	See Section 7 (Handling and Storage) for further details.
HAZARDOUS DECOMPOSITION PRODUCTS:	None known, refer to hazardous combustion products in Section 5.

SECTION 11 — TOXICOLOGICAL INFORMATION

ROUTES OF EXPOSURE:	Inhalation: *YES* Skin Absorption: *NO* Skin & Eyes: *YES* Ingestion: *YES*
POTENTIAL HEALTH EFFECTS (ACUTE)	
Inhalation:	Inhalation of dust may cause shortness of breath, tightness of the chest, a sore throat and cough.
Ingestion:	Ingestion may cause gastrointestinal irritation, nausea, vomiting and diarrhea.
Skin:	Direct skin contact may cause temporary redness.
Eyes:	Causes serious eye damage. Symptoms may include severe pain, tearing, redness, swelling and blurred vision. Permanent eye damage including blindness could result.
POTENTIAL HEALTH EFFECTS (CHRONIC)	
	Frequent or prolonged contact may dry the skin, leading to discomfort and dermatitis.

© 2018 Acton Technologies Inc. HgX® is a registered trademark of ACTON Technologies, Inc.

HgX®

SAFETY DATA SHEET

SECTION 11 — TOXICOLOGICAL INFORMATION (CONTINUED)

MUTAGENICITY:	Not expected to be mutagenic in humans.
CARCINOGENICITY:	No components are listed as carcinogens by ACGIH, IARC, OSHA or NTP.
REPRODUCTIVE EFFECTS & TERATOGENICITY:	Not expected to cause reproductive effects.
SENSITIZATION TO MATERIAL:	Not expected to be a skin or respiratory sensitizer.
SPECIFIC TARGET ORGAN EFFECTS:	This material is not classified as hazardous under U.S. OSHA regulations (29CFR 1910.1200) (Hazcom 2012) and Canadian WHMIS regulations (Hazardous Products Regulations) (WHMIS 2015).
MEDICAL CONDITIONS AGGRAVATED BY OVEREXPOSURE:	None known.
SYNERGISTIC MATERIALS:	Not available.
TOXICOLOGICAL DATA:	See below for individual ingredient acute toxicity data.

Ingredients	LC_{50} (4hr)	LD_{50}	
	inh, rat	(Oral, rat)	(Rabbit, dermal)
Ethylenediamine-tetraacetic acid (EDTA)	N/Av	4500 mg/kg	N/Av

OTHER IMPORTANT HAZARDS:	None known or reported by the manufacturer.

SECTION 12 — ECOLOGICAL INFORMATION

ECOTOXICITY:	Not classified for hazards to the environment. However, this does not exclude the possibility that large or frequent spills can have a harmful or damaging effect on the environment.

ECOTOXICITY DATA:

Ingredients	CAS No	Toxicity to Fish		
		LC50 / 96h	NOEC / 21 day	M Factor
Ethylenediamine-tetraacetic acid (EDTA)	60-00-4	>41mg/L (Bluegill sunfish)	N/Av	None

Ingredients	CAS No	Toxicity to Daphnia		
		EC50 / 48h	NOEC / 21 day	M Factor
Ethylenediamine-tetraacetic acid (EDTA)	60-00-4	140mg/L (Daphnia magna)	N/Av	None

Ingredients	CAS No	Toxicity to Algae		
		EC50 / 96h or 72h	NOEC / 96h or 72h	M Factor
Ethylenediamine-tetraacetic acid (EDTA)	60-00-4	>100mg/L (Green algae)	N/Av	None

© 2018 Acton Technologies Inc. HgX® is a registered trademark of ACTON Technologies, Inc.

HgX®

SAFETY DATA SHEET

SECTION 12 — ECOLOGICAL INFORMATION (CONTINUED)

PERSISTENCE AND DEGRADABILITY:	No data is available on the product itself.
BIOACCUMULATION POTENTIAL:	No data is available on the product itself.

Components	Partition coefficient n-octanol/water (log Kow)	Bioconcentration factor (BCF)
Ethylenediamine-tetraacetic acid (EDTA) (CAS 60-00-4)	N/Av	N/Av

MOBILITY IN SOIL:	No data is available on the product itself.
OTHER ADVERSE ENVIRONMENTAL EFFECTS:	No other adverse environmental effects (e.g. ozone depletion, photochemical ozone creation potential, endocrine disruption, global warming potential) are expected from this component.

SECTION 13 — DISPOSAL CONSIDERATIONS

HANDLING FOR DISPOSAL:	Collect and reclaim or dispose in sealed containers at licensed waste disposal site. Dispose of contents/container in accordance with local/regional/national/international regulations.
METHODS OF DISPOSAL:	Dispose in accordance with all applicable federal, state, provincial and local regulations.
RCRA:	If this product, as supplied, becomes a waste in the United States, it may meet the criteria of a hazardous waste as defined under RCRA, Title 40 CFR 261. It is the responsibility of the waste generator to determine the proper waste identification and disposal method. For disposal of unused or waste material, check with local, state and federal environmental agencies.

SECTION 14 — TRANSPORT INFORMATION

REGULATORY INFORMATION	UN NUMBER	UN PROPER SHIPPING NAME	TRANSPORT HAZARD CLASS(ES)	PACKING GROUP	LABEL
49CFR/DOT	None.	Not regulated.	Not regulated.	None.	
49CFR/DOT Additional information	None.				
TDG	None.	Not regulated.	Not regulated.	None.	
TDG Additional information	None.				

SPECIAL PRECAUTIONS FOR USER:	None known or reported by the manufacturer.
ENVIRONMENTAL HAZARDS:	See ECOLOGICAL INFORMATION, Section 12.
TRANSPORT IN BULK ACCORDING TO ANNEX II OF MARPOL 73/78 AND THE IBC CODE:	This substance/mixture is not intended to be transported in bulk.

© 2018 Acton Technologies Inc. HgX® is a registered trademark of ACTON Technologies, Inc.

HgX®

SAFETY DATA SHEET

SECTION 15 — REGULATORY INFORMATION

US FEDERAL INFORMATION:	Components listed below are present on the following U.S. Federal chemical lists:

Ingredients	CAS #	TSCA Inventory	CERCLA Reportable Quantity(RQ) (40 CFR 117.302)	SARA TITLE III: Sec. 302, Extremely Hazardous Substance, 40 CFR 355	SARA TITLE III: Sec. 313, 40 CFR 372, Specific Toxic Chemical	
					Toxic Chemical	de minimus Concentration
Ethylenediamine-tetraacetic acid (EDTA)	60-00-4	Yes	5000 lb/ 2270 kg	N/Av	No	N/Ap

SARA TITLE III: Sec. 311 and 312, SDS Requirements, 40 CFR 370 Hazard Classes: None.

US STATE RIGHT TO KNOW LAWS:	The following chemicals are specifically listed by individual States:

Ingredients	CAS #	California Proposition 65		State "Right to Know" Lists					
		Listed	Type of Toxicity	CA	MA	MN	NJ	PA	RI
Ethylenediamine-tetraacetic acid (EDTA)	60-00-4	No	N/Ap	Yes	Yes	No	Yes	Yes	No

CANADIAN INFORMATION:	WHMIS information: Refer to Section 2 for a WHMIS Classification for this product. Canadian Environmental Protection Act (CEPA) information: All ingredients listed appear on the Domestic Substances List (DSL).
INTERNATIONAL INFORMATION:	Components listed below are present on the following International Inventory list:

Ingredients	CAS #	European EINECs	Australia AICS	Philippines PICCS	Japan ENCS	Korea KECI/ KECL	China IECSC	NewZealand IOC
Ethylenediamine-tetraacetic acid (EDTA)	60-00-4	200-449-4	Present	Present	(2)-1296; (2)-1263	KE-13648	Present	HSR003060

© 2018 Acton Technologies Inc.
HgX® is a registered trademark of ACTON Technologies, Inc.

HgX®

SAFETY DATA SHEET

SECTION 16 — OTHER INFORMATION

LEGEND:	ACGIH: American Conference of Governmental Industrial Hygienists CAS: Chemical Abstract Services CERCLA: Comprehensive Environmental Response, Compensation, and Liability Act of 1980 CFR: Code of Federal Regulations CSA: Canadian Standards Association DOT: Department of Transportation EPA: Environmental Protection Agency HMIS: Hazardous Materials Identification System HSDB: Hazardous Substances Data Bank IARC: International Agency for Research on Cancer Inh: Inhalation LC: Lethal Concentration LD: Lethal Dose MN: Minnesota N/Ap: Not Applicable N/Av: Not Available NFPA: National Fire Protection Association	NIOSH: National Institute of Occupational Safety and Health NJ: New Jersey NTP: National Toxicology Program OECD: Organisation for Economic Cooperation and Development OSHA: Occupational Safety and Health Administration PA: Pennsylvania PEL: Permissible exposure limit RCRA: Resource Conservation and Recovery Act RI: Rhode Island RTECS: Registry of Toxic Effects of Chemical Substances SARA: Superfund Amendments and Reauthorization Act STEL: Short Term Exposure Limit TLV: Threshold Limit Values TWA: Time Weighted Average WHMIS: Workplace Hazardous Materials Identification System
REFERENCES:	1. ACGIH, Threshold Limit Values for Chemical Substances and Physical Agents & Biological Exposure Indices for 2016 2. International Agency for Research on Cancer Monographs, searched 2017 3. Canadian Centre for Occupational Health and Safety, CCInfoWeb databases, 2017(Chempendium, HSDB and RTECs). 4. Material Safety Data Sheets from manufacturer. 5. US EPA Title III List of Lists - 2017 version. 6. California Proposition 65 List - 2017 version. 7. OECD - The Global	
PREPARATION DATE:	10/30/2017	
OTHER SPECIAL CONSIDERATIONS FOR HANDLING:	Provide adequate information, instruction and training for operators.	

Prepared for: Acton Technologies, Inc. 100 Thompson St, PO Box 726 Pittston, PA, USA 18640 Telephone: (570) 654-0612 Please direct all enquiries to Acton Technologies.	ACTON TECHNOLOGIES
Prepared by: ICC The Compliance Center Inc. Telephone: (888) 442-9628 (U.S.) (888) 977-4834 (Canada) http://www.thecompliancecenter.com	icc ComplianceCenter

This Safety Data Sheet was prepared by ICC The Compliance Center Inc using information provided by / obtained from Acton Technologies and CCOHS' Web Information Service. The information in the Safety Data Sheet is offered for your consideration and guidance when exposed to this product. ICC The Compliance Center Inc and Acton Technologies expressly disclaim all expressed or implied warranties and assume no responsibilities for the accuracy or completeness of the data contained herein. The data in this SDS does not apply to use with any other product or in any other process.

This Safety Data Sheet may not be changed, or altered in any way without the expressed knowledge and permission of ICC The Compliance Center Inc and Acton Technologies.

© 2018 Acton Technologies, Inc.

HgX® is a registered trademark of ACTON Technologies, Inc.

1" VALVES

SCREW - SMALL BODY

AE1822B With Pilot group

The classic 90° valve with female thread

3 WARRANTY YEARS

PRODUCT CERTIFICATIONS

STANDARD

CE

OPZIONALI

Ex 3GD Ex 3D Ex 2GD EAC

VALVE TECHNICAL FEATURES

Features		Values
Out		1" Gas
In		1" Gas
Working Pressure		1,5-8 bar
Standard Temperature Range		-40 °C ; +100 °C
High Range Temparature		-20 °C ; +200 °C
Kv		21 m^3/h
Weight		0.49 kg
Protection Level		IP65

Autel S.r.l. | Via Bagnoli, 9 - 41049 Sassuolo, Modena
Tel. +39 (0) 536 802104 - Fax. +39 (0) 536 803372 - info@aeautel.it
C.F. e P. IVA 00963880364

VALVE TECHNICAL FEATURES

Features		Values
Air quality classes (ISO 8573-1)	For Solid	2
	For Water with T > +3°C	4
	For Water with -20°C < T < +3°C	3
	For Water with -40°C < T < -20°C	2
	For Oil	1

PARTS LIST

No.	Description	Material
A	Clip	CS Galvanized
B	Coil	PA
C	Connector	PA + NBR
D	Pilot	SS + Brass
1	Screw M6	SS
2	Washer	SS
3	Cover	Die Cast Alu
4a	STD Diaphragm 1"	TPE
4b	HT Diaphragm 1" Kit	VITON+PTFE
5	Body 1" Screw	Die Cast Alu

Immagine

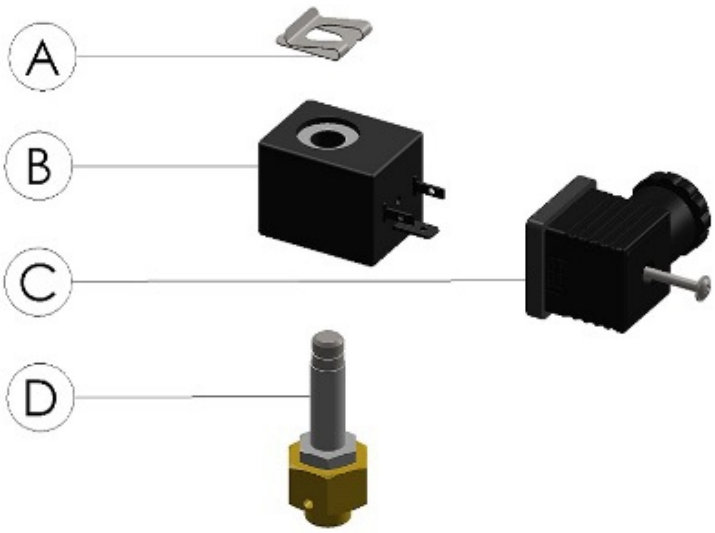

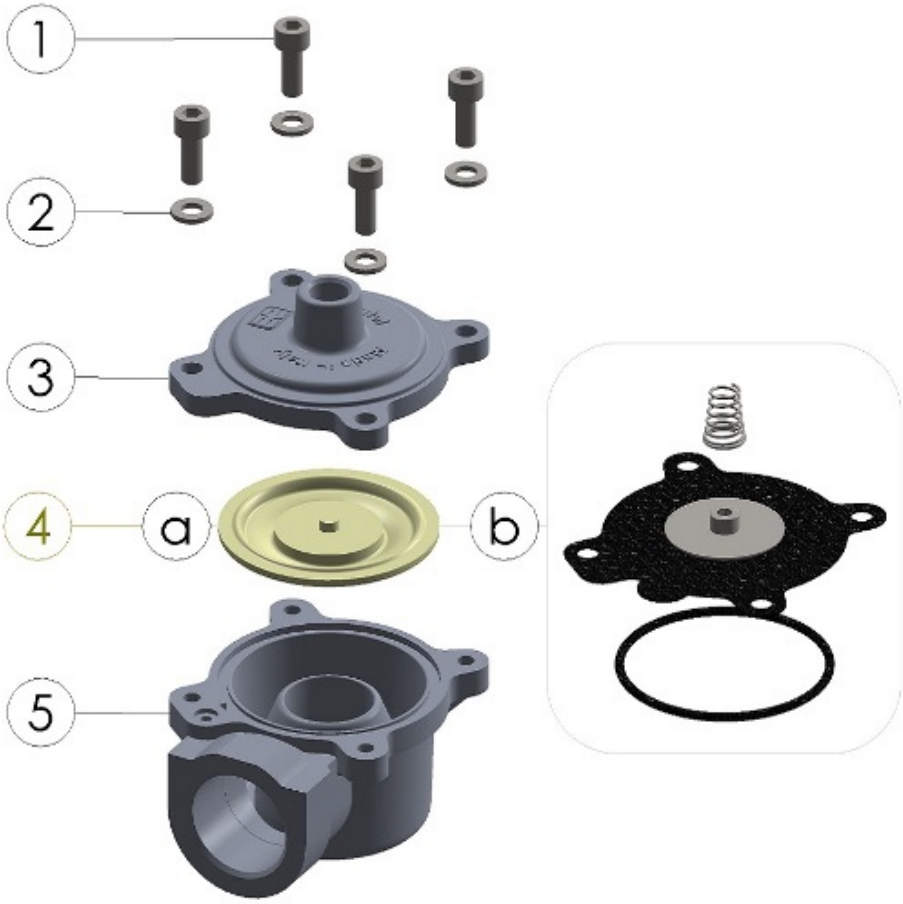

DIMENSIONAL LAYOUT

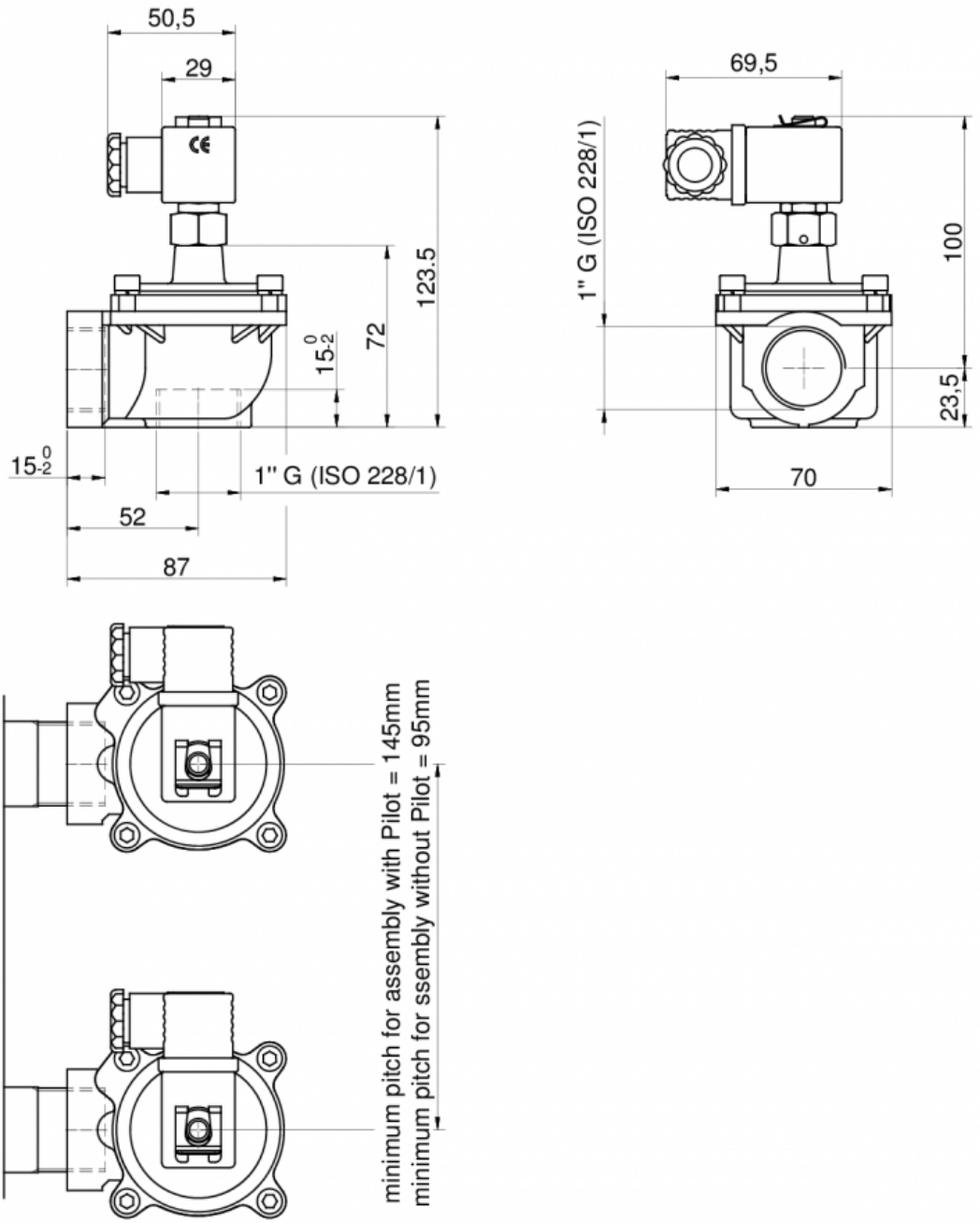

CONSUMPTION GRAPHS

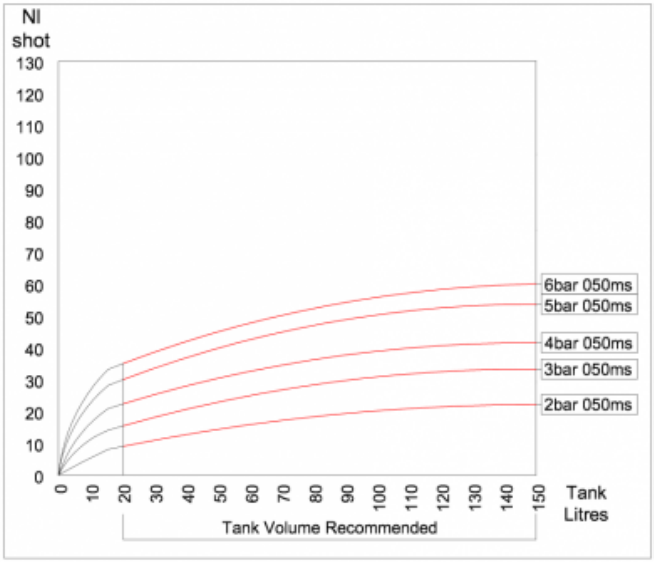

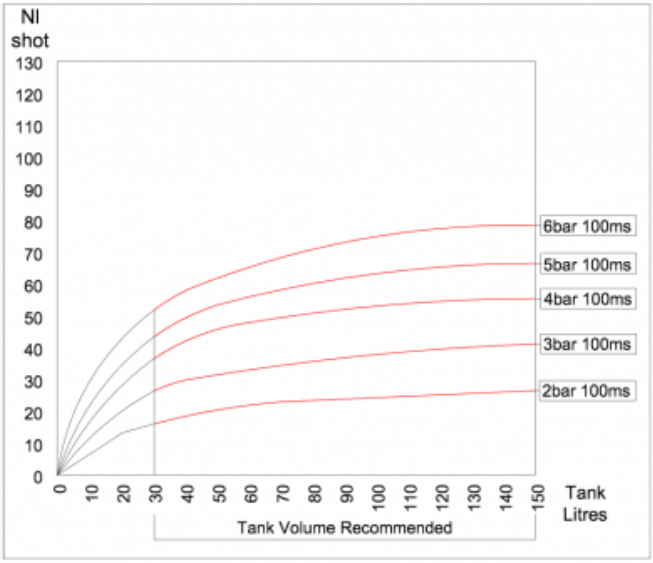

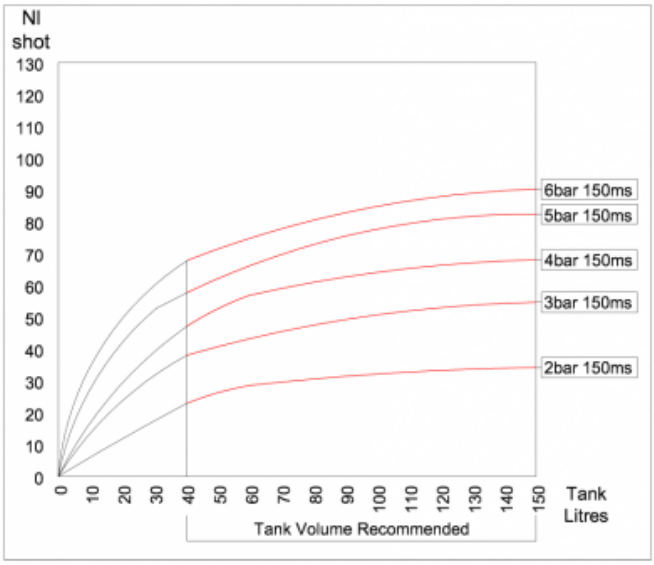

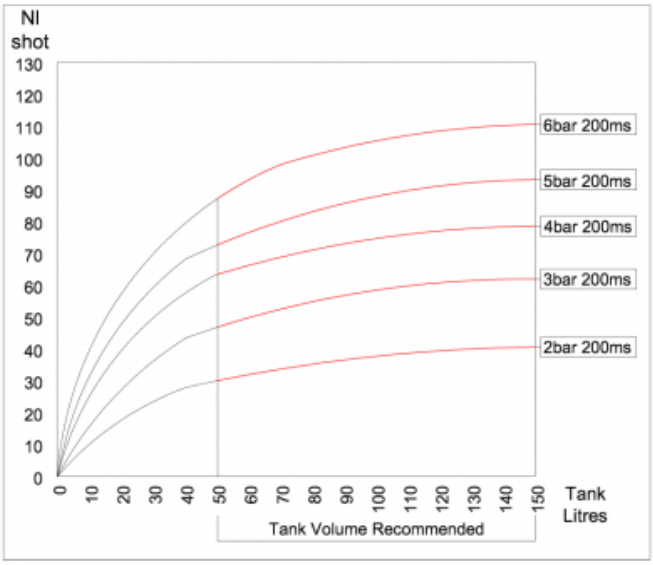

Appendix D

Forms

1. Table 8-1 Lighting Resources, LLC - Mercury Recovery Facility, Ocala, FL Inspection and Monitoring Schedule	
Inspection Item	**Frequency**
Monitoring Equipment:	
Air Emissions Monitoring Equipment and Readings	Every 2 Hours
Health and Safety:	
First Aid Kit Contents / Expiration Dates	Monthly
Spill Kit Contents / Expiration Dates	Monthly
Wash Stations	Monthly
Spill Control Equipment: Brooms, Pans, HEPA / ULPA Vacuums, Absorbents	Monthly
Respirators/Respirator Cartridges Inventory	Monthly
Emergency Contact List/Evacuation Plans	Monthly
Emergency Shower and Eye Wash	Monthly
Hearing Protection	Monthly
Protective Eye Glasses	Monthly
Fire Extinguisher Status	Monthly or after each use
Telephone / Communication Devices	Monthly
Emergency Exits	Monthly
Facility Signs	Monthly
Facility Security:	
Door Locks	Daily
Vehicle Locks	Daily
Security Fence and Gate	Daily
Log In / Log Out Procedures at Office	Daily
Area A - Lamp Staging / Storage Area:	
Overall Cleanliness	Daily
Floor Slab	Monthly
Signs	Monthly
Area Walls and Ceiling	Monthly
Aisle Space	Daily
Pallets	Daily
Container Condition	Daily
Container Closures	Daily
Containers Labeled , Dated, and Signed	Daily
Container Stacking/Storage	Daily
Containers Logged In	Daily
Container Status / Retention Time	Daily
Supply Storage and Inventory	Monthly
Area A - Related Material Handling, Staging, and Management Areas:	
Overall Cleanliness	Daily
Load /Unloading Areas,	Daily

2. Table 8-1 (cont'd) Lighting Resources, LLC - Mercury Recovery Facility, Ocala, FL Inspection and Monitoring Schedule	
Inspection Item	**Frequency**
Battery Sorting / Staging Area	Daily
Area Floors, Walls, and Ceiling	Daily
Area B - Lamp Processing Room & Equipment Inspection and Maintenance:	
Overall Cleanliness	Daily
Lamp Feed Table	Daily
Broken Glass	Daily
Conveyors	Daily
Conveyor Drawers (remove and empty)	Daily
Conveyor Belts (inspect for wear, damage, debris)	Daily
Universal Rumbler Drawers (check, remove, empty)	Daily
Vibrating Flat Bed Grid (check and clear)	Daily
Flexible Pipework (inspected)	Weekly
Internal Inspection (remove rumbler side panels)	Monthly
Rumbler Wheels	Weekly
Sweep Floor	Daily
Tools & Flammables put away	Daily
Trash & Cardboard picked up	Daily
Phosphor Powder Staging Area	Daily
Floors, Walls, and Ceiling	Daily
Area C –Separated Glass and Supply Storage Room:	
Overall Cleanliness	Daily
Floor Slab	Monthly
Signs	Monthly
Separated Glass -Rolloff Condition	Weekly
Separated Glass Rolloff Log with Tipper Number & Date	Daily
Separated Glass Rolloff Volume Status / Retention Time	Daily
Floors, Walls, and Ceilings	Daily
Loading Dock Area:	
Overall Cleanliness	Daily
Drainage Grate and Sump	Daily
Pallets	Daily
Trash & Cardboard	Daily
Forklifts & Miscellaneous:	
Forklifts	Daily
Receiving & Production Workstation	Daily

LIGHTING RESOURCES, LLC
OCALA, FLORIDA

3. WASTE AUTHORIZED FOR ACCEPTANCE

Wastes authorized for acceptance and processing at the Lighting Resources, LLC (Ocala, FL) Facility:

For Processing:

- Intact Mercury Containing Lamps (MCLs)
- Broken or Crushed Mercury Containing Lamps (MCLs)

Wastes authorized for acceptance and transfer only at the Lighting Resources, LLC (Ocala, FL) Facility:

For Transfer Only:

- Intact Mercury Batteries
- Mercury Containing Devices (MCDs)
- Non-PCB Lighting Ballasts
- PCB Lighting Ballasts

LIGHTING RESOURCES, LLC
OCALA, FLORIDA

4. WASTE PROHIBITED FOR ACCEPTANCE

Wastes that are specifically prohibited for acceptance at the Lighting Resources, LLC (Ocala, FL) Facility:

- Radioactive Wastes
- Liquid Wastes
- Biological and Medical Wastes
- Municipal Solid Wastes
- Flammable Wastes
- Explosive Wastes
- Pyrophoric Wastes
- Ignitable Waste
- Corrosive Waste
- Reactive Waste
- Acute Hazardous Waste
- Toxic Waste
- Free Liquids or Leaking Containers

LIGHTING RESOURCES, LLC
OCALA, FLORIDA

5. LOAD INSPECTION PROCEDURES

The following action plan details the procedures to follow for conducting the load inspection.

1. **Have appropriate safety equipment present near work station (if needed later):**
   a. Nitrile rubber gloves,
   b. Dust mask and respirator,
   c. Tyveks,
   d. Safety glasses,
   e. Clean, empty steel 55-gallon drums,
   f. Long handled equipment / tool, and
   g. Any other equipment deemed necessary.

2. **Examine for unauthorized wastes and/or safety hazards:**
   a. Container and/or label indicate unauthorized waste types.
   b. Moisture, and/or leakage are observed.
   c. Powders, dusts, smoke, vapors, or chemical odor emissions are observed.
   d. Sludges, pastes, slurries, or bright colors are visible.
   e. Placards or other information on delivery vehicle indicate unauthorized waste types.
   f. Material is received from a non-contracted transporter and/or generator.
   g. Manifest or bill of lading is incomplete, inaccurate, or missing.

3. **Take following action if unauthorized waste is observed:**
   a. Any material that is to be rejected will be marked with a label noting the material as an unauthorized waste, and will remain in the delivery vehicle. If material is unloaded, it will be immediately reloaded into the delivery vehicle in a safe manner using appropriate equipment and PPE as necessary. The Facility Manager and Operations Manager will both be notified.
   b. The transporter and generator will be notified of such delivery being rejected, and arrangements will be made to have the same delivery vehicle return the load to the generator or to an alternate facility that is authorized and permitted to receive such materials.

LIGHTING RESOURCES, LLC
OCALA, FLORIDA

6. LOAD INSPECTION PROCEDURES (cont'd)

c. In the unlikely event, an unauthorized material is discovered after the material has been accepted by the Facility, the transporter and generator will be immediately notified that the material is rejected, and arrangements will be made for the transporter or generator to send a vehicle for pickup and delivery of materials to the generator, or to an alternate facility that is authorized and permitted to receive such materials. The unauthorized material shall be completely containerized and secured in a location of the Facility that is away from the authorized materials and routine operations. If arrangements cannot be made with the transporter or generator, Lighting Resources, LLC will arrange for the proper transport of the rejected materials to an authorized and permitted facility.

d. All rejected loads will be issued a load reject form with a new bill of lading or hazardous waste manifest form for use in shipping the material back to the generator or to an alternate approved facility.

e. A written report shall be made documenting the rejected load, actions taken, and final disposition of the rejected load. A copy of the load reject form and report shall be maintained at the Facility for a minimum period of three years.

LIGHTING RESOURCES, LLC
OCALA, FLORIDA

7. UNAUTHORIZED WASTE – LOAD REJECTION FORM

Transporter Company Name: _____

Address: _____

Phone Number: _____

Vehicle Type / Truck Number: _____

Vehicle License Number: _____

Driver's Name: _____

Generator/Source: _____

Description of Unauthorized Waste:

_____

_____

_____

Actions Taken for Removal:

_____

_____

_____

Parties / Authorities Notified: _____

_____

_____

_____

Inspector's Name (Printed): _____

Inspector's Signature: _____

Date: _____ Time: _____

LIGHTING RESOURCES, LLC
OCALA, FLORIDA

8. LOAD REJECTION LOG

Date	Facility Staff Name	Description of Incident and Response Taken

Name (Printed): _____

Signature: _____

Date: _____ Time: _____

Locations		AM-1	AM-2	AM-3	AM-4	AM-5	AM-6	AM-7	AM-8	AM-9	AM-10	AM-11	AM-12	AM-13	AM-14	
Date	**Time**															**Inspector Signature**

Note: Readings are measured in mg/m^3. **.050 Mercury Level for Respirator Equipment (all LRL Employees wear respirators during processing)**

LIGHTING RESOURCES, LLC
OCALA, FLORIDA

10. DAILY FORK TRUCK INSPECTION REPORT:

Vehicle Serial Number:		**Inspection Date:**	
Current Hour Meter Reading		**Inspection Time:**	A.M. P.M.
Next Scheduled PM (Hours):		**Inspected By:**	

I. Damage Inspection

Inspection Item	Condition		Notes & Corrective Actions
Overhead Guard – Check for broken welds, missing bolts or other damaged areas.	☐ Satisfactory	☐ Unsatisfactory	
Hydraulic Cylinders – check for leaks or damage to lift, tilt and side shift cylinders.	☐ Satisfactory	☐ Unsatisfactory	
Mast Assembly – Check for broken welds, cracked or bent areas, and worn or missing stops.	☐ Satisfactory	☐ Unsatisfactory	
Lift Chains & Rollers – Check for wear, squeaking, damage, kinks, and evidence of rust.	☐ Satisfactory	☐ Unsatisfactory	
Forks – Check for cracks, bending, wear, mismatch or excessive oil or rust.	☐ Satisfactory	☐ Unsatisfactory	
Tires – Check for missing rubber, separation from tire rim, large cuts or gouges or missing lug nuts.	☐ Satisfactory	☐ Unsatisfactory	

II. Operations

Inspection Item	Condition		Notes & Corrective Actions
Control Levers – Do levers operate properly?	☐ Satisfactory	☐ Unsatisfactory	
Steering – Is there excessive free play in the steering.	☐ Satisfactory	☐ Unsatisfactory	
Brakes – Are service and parking brakes fully operational?	☐ Satisfactory	☐ Unsatisfactory	

III. Safety and Warning Equipment

Inspection Item	Condition		Notes & Corrective Actions
Warning Systems – Are warning lights and horn operational?	☐ Satisfactory	☐ Unsatisfactory	
Propane Tank – Is the tank bracket properly positioned and locked down?	☐ Satisfactory	☐ Unsatisfactory	
Propane Supply Hose – Is the supply hose damaged, frayed, kinked, pinched or bound?	☐ Satisfactory	☐ Unsatisfactory	
Propane Connector – Is the connector threaded squarely and tight?	☐ Satisfactory	☐ Unsatisfactory	
Propane Odor – Is there any scent of propane on or near the propane tank? If yes, close the tank valve and report the problem immediately.	☐ Satisfactory	☐ Unsatisfactory	
Seat Belts – Are seat belts operational?	☐ Satisfactory	☐ Unsatisfactory	
Gauges – Area all gauges in working order?	☐ Satisfactory	☐ Unsatisfactory	
Have all vehicles in unsafe operating condition been properly locked and tagged out?	☐ Satisfactory	☐ Unsatisfactory	

LIGHTING RESOURCES, LLC
OCALA, FLORIDA

11. DAILY FORK TRUCK INSPECTION REPORT (cont'd):

Vehicle Serial Number:		**Inspection Date:**	
Current Hour Meter Reading		**Inspection Time:**	A.M. P.M.
Next Scheduled PM (Hours):		**Inspected By:**	

IV. Damage Inspection

Inspection Item	Condition	Notes & Corrective Actions
Overhead Guard – Check for broken welds, missing bolts or other damaged areas.	☐ Satisfactory ☐ Unsatisfactory	
Hydraulic Cylinders – check for leaks or damage to lift, tilt and side shift cylinders.	☐ Satisfactory ☐ Unsatisfactory	
Mast Assembly – Check for broken welds, cracked or bent areas, and worn or missing stops.	☐ Satisfactory ☐ Unsatisfactory	
Lift Chains & Rollers – Check for wear, squeaking, damage, kinks, and evidence of rust.	☐ Satisfactory ☐ Unsatisfactory	
Forks – Check for cracks, bending, wear, mismatch or excessive oil or rust.	☐ Satisfactory ☐ Unsatisfactory	
Tires – Check for missing rubber, separation from tire rim, large cuts or gouges or missing lug nuts.	☐ Satisfactory ☐ Unsatisfactory	

V. Operations

Inspection Item	Condition	Notes & Corrective Actions
Control Levers – Do levers operate properly?	☐ Satisfactory ☐ Unsatisfactory	
Steering – Is there excessive free play in the steering.	☐ Satisfactory ☐ Unsatisfactory	
Brakes – Are service and parking brakes fully operational?	☐ Satisfactory ☐ Unsatisfactory	

VI. Safety and Warning Equipment

Inspection Item	Condition	Notes & Corrective Actions
Warning Systems – Are warning lights and horn operational?	☐ Satisfactory ☐ Unsatisfactory	
Propane Tank – Is the tank bracket properly positioned and locked down?	☐ Satisfactory ☐ Unsatisfactory	
Propane Supply Hose – Is the supply hose damaged, frayed, kinked, pinched or bound?	☐ Satisfactory ☐ Unsatisfactory	
Propane Connector – Is the connector threaded squarely and tight?	☐ Satisfactory ☐ Unsatisfactory	
Propane Odor – Is there any scent of propane on or near the propane tank? If yes, close the tank valve and report the problem immediately.	☐ Satisfactory ☐ Unsatisfactory	
Seat Belts – Are seat belts operational?	☐ Satisfactory ☐ Unsatisfactory	
Gauges – Area all gauges in working order?	☐ Satisfactory ☐ Unsatisfactory	
Have all vehicles in unsafe operating condition been properly locked and tagged out?	☐ Satisfactory ☐ Unsatisfactory	

Name: _____ **Signature:** _____ **Date:** _____

LIGHTING RESOURCES, LLC
OCALA, FLORIDA

12. RECORD OF FACILITY PERSONNEL TRAINING

Training Date	Training Provider	Training Topic

Name (Printed): _____

Signature: _____

Date: _____ Time: _____

LIGHTING RESOURCES, LLC
OCALA, FLORIDA

13. FACILITY EQUIPMENT MAINTENANCE AND SERVICE LOG

Date	Facility Staff / Service Provider Name	Description of Maintenance or Service

Name (Printed): _____

Signature: _____

Date: _____ Time: _____

LIGHTING RESOURCES, LLC
OCALA, FLORIDA

14. DAILY CLOSING REPORT:

Date:	
Time:	

I. Security

Item	Satisfactory	Unsatisfactory	Notes
Security System (Functional, Ready to arm?)			
Vehicle Locks (Are all trucks locked and trailer doors closed:?)			
Doors & Windows (Are all doors and windows closed and locked?)			

II. Area A - Dock Area

Item	Satisfactory	Unsatisfactory	Notes
Overall Cleanliness (Has area been appropriately cleaned, including inside floors / outside bays?)			
Pallets (Have excess pallets been moved to the side lot?)			
Trash & Cardboard (Has all trash been taken to the dumpster? Have cardboard bales been moved to the side lot?)			
Floor (Has the dock area floor been swept?)			

III. Area A - Staging / Storage, Aisle Ways

Item	Satisfactory	Unsatisfactory	Notes
Aisle ways (Have the aisle ways been swept?)			
Lamp Staging Rows (Are all containers secured, neatly stacked, appropriately labeled?)			
Supply Storage (Has area been organized and supplies placed in appropriate location?)			
Floor (Has the floor been swept?)			

IV. Area A - Forklifts / Scale, Sweeping Debris Drums

Item	Satisfactory	Unsatisfactory	Notes
Forklifts (Have the propane lines on each forklift been shut off? Keys removed from the ignition?)			
Scale (Is area free of debris and clean?)			
Sweeping / PPE Debris Drums (Are the two drums,1-for sweepings and 1-for spent Tyveks, closed and the immediate area clean?)			

LIGHTING RESOURCES, LLC
OCALA, FLORIDA

15. DAILY CLOSING REPORT (cont'd):

V. Area A – Battery Sorting / Staging, MCD Staging, Ballast Staging

Item	Satisfactory	Unsatisfactory	Notes
Battery Sorting / Staging (Has the area been cleaned and organized, and all materials containerized?)			
MCD Staging (Has the area been cleaned and are materials containerized?)			
Ballast Staging (Has the area been cleaned and are materials containerized?)			
Floor (Has the floor been swept?)			

VI. Area B - Lamp Processing Equipment Shutdown & Decontamination

Item	Satisfactory	Unsatisfactory	Notes
Overall Cleanliness (Has the machine been wiped down?)			
Lamp Feed Table (Has the feed table been thoroughly dusted, vacuumed and wiped down?)			
Lamp Glass Cullet (Has all containerized glass cullet been moved to Area C?)			
Lamp Metals (Has all containerized metals been moved into the dedicated trailer parked outside?)			
Panels (Are all panels securely closed?)			
Phosphor Powder Staging (Is Powder Staging Area clean and secure?)			
Floor (Has the floor been swept?)			
Tools & Flammables (Have all tools, paints and solvents been returned to their proper places?)			
Trash & Cardboard (Has all trash been taken to the dumpster? Has all cardboard been baled?)			
Forklift Charging Station (Is area clean?)			
PPE Debris Drums (Is the drum for spent Tyveks, closed and the immediate area clean?)			

VII. Area C – Processed Glass and Supply Storage

Item	Satisfactory	Unsatisfactory	Notes
Lamp Glass Cullet (Are the rolloffs with separated glass covered?)			
Supply Storage (Has area been organized and supplies placed in appropriate location?)			
Floor (Has the floor been swept?)			

Name: _____ **Signature:** _____ **Date:** _____

LIGHTING RESOURCES, LLC
OCALA, FLORIDA

16. FACILITY INCIDENT LOG

Date	Facility Staff Name	Description of Incident and Response Taken

Name (Printed): _____

Signature: _____

Date: _____ Time: _____

Lighting Resources, LLC - Mercury Recovery Facility, Ocala, FL

17. Monthly Inspection and Monitoring Schedule

Inspection Item Monthly

Health and Safety:		OK	To Do
First Aid Kit Contents / Expiration Dates	Monthly		
Spill Kit Contents / Expiration Dates	Monthly		
Wash Stations	Monthly		
Spill Control Equipment: Brooms, Pans, HEPA / ULPA Vacuums, Absorbents	Monthly		
Respirators/Respirator Cartridges Inventory	Monthly		
Emergency Contact List/Evacuation Plans	Monthly		
Emergency Shower and Eye Wash	Monthly		
Hearing Protection	Monthly		
Protective Eye Glasses	Monthly		
Fire Extinguisher Status	Monthly or after each use		
Telephone / Communication Devices	Monthly		
Emergency Exits	Monthly		
Facility Signs	Monthly		
Area A - Lamp Staging / Storage Area:			
Supply Storage and Inventory	Monthly		
Floor Slab	Monthly		
Signs	Monthly		
Area Walls and Ceiling	Monthly		
Area B - Lamp Processing Room & Equipment Inspection and Maintenance:			
Internal Inspection (remove rumbler side panels)	Monthly		
Area C –Separated Glass and Supply Storage Room:			
Floor Slab	Monthly		
Signs	Monthly		

Signature

Date

LIGHTING RESOURCES, LLC
Ocala, Florida
Custom Sales by Item Summary
January 1, 2021 - December 31, 2021

Item	Item Desc.	Qty. Sold
Inventory Item		
101	10FT FLUORESCENT LAMPS	636.00
11	1FT FLUORESCENT LAMPS	2,142.00
12	1FT FLUORESCENT LAMPS - LBS	23.00
121	12FT FLUORESCENT LAMPS	182.00
21	2FT FLUORESCENT LAMPS	35,908.00
22	2FT FLUORESCENT LAMPS - LBS	156.00
31	3FT FLUORESCENT LAMPS	13,570.00
32	3FT FLUORESCENT LAMPS - LBS	12.00
41	4FT FLUORESCENT LAMPS	2,538,784.00
41S	4FT COATED FLUORESCENT LAMPS	33,032.00
42	4FT FLUORESCENT LAMPS - LBS	1,079,115.00
42S	4FT COATED FLUORESCENT LAMPS - LBS	246.00
51	5FT FLUORESCENT LAMPS	4,357.00
52	5FT FLUORESCENT LAMPS - LBS	29.00
61	6FT FLUORESCENT LAMPS	7,656.00
62	6FT FLUORESCENT LAMPS - LBS	778.00
71	7FT FLUORESCENT LAMPS	581.00
81	8FT FLUORESCENT LAMPS	112,737.00
81S	8FT COATED FLUORESCENT LAMPS	2,265.00
82	8FT FLUORESCENT LAMPS - LBS	177,756.00
91	9FT FLUORESCENT LAMPS	187.00
AEROCAN655	55 GALLON DRUM OF AEROSOL CANS	14.00
BA2	BATTERIES- ALKALINE - LBS	54,465.00
BALNPE2	NON-PCB ELECTRONIC BALLASTS - LBS	59,553.00
BALNPM2	NON-PCB MAGNETIC BALLASTS - LBS	143,081.00
BALNPM655	55 GALLON DRUM OF NON-PCB MAGNETIC BALLASTS	712.00
BALPCB2	PCB BALLASTS - LBS	9,762.00
BLE2	LEAD ACID BATTERIES - LBS	87,984.00
BLI2	BATTERIES - LITHIUM ION - LBS	27,633.00
BLIINCP2	BATTERIES - LITHIUM ION - INTERNAL CELL PHONE - LBS	320.00
BLP2	BATTERIES - LITHIUM PRIMARY - LBS	2,750.00
BMIX2	BATTERIES - MIXED - LBS	6,390.00
BN2	BATTERIES - NI-CD DRY - LBS	18,205.00
BNIMH2	NIMH BATTERIES - LBS	1,449.00
BNIW2	BATTERIES - NI-CD WET - LBS	2,241.00
BRO2	BROKEN FLUORESCENT LAMPS - LBS	16,120.00
BROH2	BROKEN HID LAMPS - LBS	1,436.00
BX4	4 FOOT BOX-EMPTY-USAGE FEE	91.00
BX8	8 FOOT BOX-EMPTY-USAGE FEE	222.00
CAPNP2	NON-PCB CAPACITORS - LBS	4,040.00
CFL1	COMPACT LAMPS-EA	167,306.00
CFL2	COMPACT LAMPS - LBS	173,710.00
CFLB1	COMPACT LAMPS WITH BALLAST	59,899.00
CFLB2	COMPACT LAMPS WITH BALLAST - LBS	4,358.00
CIR1	CIRCULAR LAMPS	3,909.00
CIR2	CIRCULAR LAMPS - LBS	31.00
CRU2	CRUSHED FLUORESCENT LAMPS - LBS	46,084.00
CRU655	55 GALLON DRUM OF CRUSHED FLUORESCENT LAMPS	1,239.00
CRU655 6-10DRUMS	55 GALLON DRUM OF CRUSHED FLUORESCENT LAMPS	8.00
CRUD2	CRUSHED LAMPS WITH DEBRIS - LBS	1.00
CRUD655	55 GALLON DRUM OF CRUSHED LAMPS WITH DEBRIS	1.00

CRUN655	55 GALLON DRUM OF CRUSHED NEON LAMPS	4.00
CRUW2	WET CRUSHED LAMPS - LBS	1.00
CRUW655	55 GALLON DRUM OF WET CRUSHED LAMPS	6.00
DF4REP	4FT FIBER DRUM-EMPTY-REPLACEMENT FEE	3.00
DMS55	55 GALLON STEEL DRUM-USAGE FEE	3.00
DMS55LDREP	55 GALLON STEEL DRUM WITH LID-REPLACEMENT FEE	1.00
EPBAL	EASYPAK BALLAST RECYCLING CONTAINER	15.00
EPBATNL	EASYPAK BATTERY - NON LITHIUM	4.00
EPCFL	EASYPAK CFL	4.00
EPMBNL	EASYPAK MINI BATTERY - NON LITHIUM	1.00
EPMCFL	EASYPAK MINI CFL	4.00
EPMIBNL	Standard Inventory Part Form	1.00
EPTHERM	EASYPAK THERMOSTAT	1.00
EPUBH	EASYPAK U-BEND HID	4.00
EPUL	EASYPAK UNIVERSAL LAMP	8.00
EPV4J	EASYPAK 4' VAPORSHIELD JUMBO BOX	106.00
EPV4S	4' VAPORSHIELD STANDARD BOX, SKU 440-100-VS	42.00
EPV8LA	8' VAPORSHIELD LAMP RECYCLING BOX, SKU 440-110-VS	22.00
EW2	ELECTRONIC WASTE - LBS	141,552.00
FL1	FLOOD LAMPS FOR RECYCLING	1,007.00
FX2	LAMP FIXTURE - LBS	2,724.00
FXNOLMP1	FIXTURE WITHOUT LAMP - EA	678.00
FXNOLMP2	FIXTURE WITHOUT LAMP-LBS	1,338.00
G1	GERMICIDAL LAMPS-EA	1,145.00
G2	GERMICIDAL LAMPS - LBS	159.00
H1	HID LAMPS-REGULAR-EA	141,227.00
H2	HID LAMPS-REGULAR-LBS	2,198.00
HA1	HALOGEN LAMPS	5,214.00
HA2	HALOGEN LAMPS - LBS	93.00
HGLIQ2	ELEMENTAL/LIQUID MERCURY - LBS	85.00
IB41	INTERBRANCH - 4FT FLUORESCENT LAMPS	13,007.00
IB42	INTERBRANCH - 4FT FLUORESCENT LAMPS - LBS	148,310.00
IB82	INTERBRANCH - 8FT FLUORESCENT LAMPS - LBS	34,531.00
IBCFL2	INTERBRANCH - COMPACT LAMPS - LBS	1,745.00
IBCRU655	INTERBRANCH - 55 GALLON DRUM OF CRUSHED FLUORESCENT LAMF	932.00
IBLMIX2	INTERBRANCH - MIXED LAMPS - LBS	17,436.00
IN1	INDUCTION LAMPS	1,459.00
INC1	INCANDESCENT LAMPS	8,222.00
INC2	INCANDESCENT LAMPS -LBS	92.00
INK2	INK CARTRIDGES/TONER - LBS	483.00
LCD2	LCD LAMPS - LBS	2,785.00
LED1	LED LAMPS - EACH	384.00
LED2	LED LAMPS - LBS	16,059.00
LMIX2	MIXED LAMPS - LBS	192,107.00
LMIXFST2	MIXED FLUORESCENT STRAIGHT LAMPS-LBS	2,751.00
LXEAR1	XENON/ARGON LAMPS-EA	68.00
MDB2	MERCURY DEBRIS - LBS	38.00
MDSTAT2	THERMOSTAT - LBS	213.00
MDTHERM2	THERMOMETER - LBS	297.00
MDV1	MERCURY DEVICES - EA	15.00
MDV2	MERCURY DEVICES - LBS	4,171.00
MDVBL2	BLOOD PRESSURE UNITS - LBS	28.00
MISC1	MISCELLANEOUS RECYCLING	17.00
MONCRT2	CRT MONITORS - LBS	6,888.00
MONFLAT1	FLAT SCREEN MONITORS - EA	510.00
MONFLAT2	FLAT SCREEN MONITORS - LBS	3,413.00
MV2	MICROWAVE - LBS	1,010.00
N2	NEON LAMPS-LBS	669.00
PROJ1	PROJECTOR LAMPS	1,350.00
PROJ2	PROJECTOR LAMPS - LBS	474.00
RR2	RETAIL RETURN - LBS	17,120.00
RRB2	RETAIL RETURNS WITH BATTERIES - LBS	10,976.00
SOLARP2	SOLAR PANELS - LBS	49.00

TVCRT2	CRT TELEVISIONS - LBS	1,191.00
TVFLAT2	FLAT SCREEN TELEVISIONS - LBS	11,891.00
U1	U-BEND FLUORESCENT LAMPS - REGULAR - EA	45,569.00
U2	U-BEND FLUORESCENT LAMPS - LBS	954.00
UV1	ULTRAVIOLET LAMPS	6,379.00
UV2	ULTRAVIOLET LAMPS - LBS	1,061.00
Total - Inventory Item		**5,755,470.00**
Non-inventory Item		
SCRAP BATTERIES	SCRAP BATTERIES	4.00
SCRAP CARDBOARD	SCRAP CARDBOARD	5.00
SCRAP EWASTE	SCRAP EWASTE	7.00
SCRAP GLASS	SCRAP GLASS	1.00
SCRAP METAL	SCRAP METAL	21.00
SCRAP PALLETS/OTHER	SCRAP PALLETS/OTHER	1.00
Total - Non-inventory Item		**39.00**
Other Charge		
EMANIFESTFEE	E-MANIFEST EPA FEES	93.00
LTL	CHARGE FOR PICK UP OF LESS THAN A FULL TRUCK LOAD	4.00
REJECTEDWASTE-LBS	REJECTED WASTE - LBS	3.00
Total - Other Charge		**100.00**
Service		
CALL	DRY RUN/CALL OUT CHARGE-NO MATERIALS RECEIVED	10.00
COR	CERTIFICATE OF RECYCLING PROCESSING FEE	16.00
CORADD	FEE FOR ADDITIONAL CERTIFICATE OF RECYCLING	100.00
DOC	MISCELLANEOUS DOCUMENT	-1.00
FUEL SURCHARGE	ENERGY FUEL SURCHARGE	778.00
HWM	HAZARDOUS WASTE MANIFEST PROCESSING FEE	8.00
LABOR	LABOR CHARGE	11.00
MIN	MINIMUM INVOICE PROCESSING FEE	168.00
REJECTEDWASTE	CONTAINER OF REJECTED WASTE	7.00
REJECTEDWASTECYB	CUBIC YARD BOX OF REJECTED WASTE	1.00
REJECTEDWASTEDM	DRUM OF REJECTED WASTE	1.00
SHIPPING SURCHARGE	SHIPPING SURCHARGE - SHIPMENTS TO HI, AK, MAINE AND/OR PR	59.00
TRAILER	TRAILER RENTAL - PER MONTH	79.00
Total - Service		**1,237.00**
Total		**5,756,846.00**

Appendix E

Sampling and Analysis

1.0 INTRODUCTION 1
1.1 Background and Overview 1
Processed Material Sampling and Testing 1
Quality Control Plan 2
1.2 Organization of Sampling and Analysis SOP 2
2.0 FACILITY PROCESS - OPERATIONAL SAMPLING AND ANALYSIS 1
2.1 Chain of Custody (COC) Record 1
2.2 Sampling Equipment and Containers 2
2.3 Sampling Equipment and Sample Container Decontamination 2
2.4 Sampling Methodology 3
Daily Samples 3
Weekly Composite Samples 5
3.0 FACILITY CLOSURE SAMPLING AND ANALYSIS 6
3.1 Notification 6
3.2 Documentation 6
3.3 Chain of Custody (COC) Record 6
3.4 Sampling Equipment and Containers 7
3.5 Sampling Equipment and Sample Container Decontamination 7
3.6 Sampling Methodology 8
Sampling of Decontamination Solid Residuals 8
Sampling of Decontamination Liquid Residuals 9
Sampling of Surface Wipes 12
Sampling of Soils 12

1.0 INTRODUCTION

This Sampling and Analysis Standard Operating Procedures (SOP) has been prepared for the Lighting Resources, LLC Florida Department of Environmental Protection (DEP) Permit Application for a Mercury Recovery Facility in accordance with Chapter 62-737 F.A.C. This SOP addresses the required sampling and analysis that must be performed to demonstrate quality assurance and quality control for the following two facility phases:

- Mercury recovery facility processing operations, and
- Mercury recovery facility closure activities.

This SOP has been prepared to strictly comply with all of the requirements contained in DEP's "Quality Assurance Standard Operating Procedures for Sampling at Facilities Permitted Under Chapter 62-737, Florida Administrative Code," dated November 1997 and reformatted April 2010.

1.1 Background and Overview

In accordance with 62-737.800 F.A.C., a mercury recovery facility must perform certain sampling and testing on the glass and metals produced from the processing of mercury containing lamps (MCLs) — specifically, if the facility intends to ship these materials to a facility other than a mercury reclamation facility. Further, the results of such testing must show that any levels of mercury detected must be below the levels specified in 62-737.840(3) F.A.C.

Processed Material Sampling and Testing

Pursuant to 62-737.840(3)(c) F.A.C., a mercury recovery facility is required to perform daily sampling of the processed lamp glass and metal materials, individually, collect and test a composite sample of the daily samples each operating week (again individually), and maintain a 12-week calculated rolling average of the mercury content for these materials.

Daily Sampling and Weekly Composite Testing. A mercury recovery facility is required to take daily physical samples of the processed glass and metal materials, individually, at the point at which the materials exit the MCL processing equipment. Collected samples must be representative of the materials processed during the day they were collected. At the beginning of each week, the prior week's daily samples will be consolidated into one weekly composite sample and submitted for chemical analysis of total mercury content using an approved EPA methodology. The weekly composite sample is prepared by thoroughly mixing equal amounts of the daily samples into a single container. Sampling and testing will be performed for both processed glass and metals individually. A minimum of three (3) separate daily samples shall be taken in order to obtain a weekly sample. When a facility is not operating at least three (3) days during a given week, that week will be dropped out of the 12-week rolling average. However, all daily samples that are in a week that has been dropped out shall be counted towards the very next weekly sample that is included in a 12-week rolling average. The result of this analysis shall be considered the *weekly composite sample of process operations*. The **total mercury content of the *weekly composite sample of process operations* must be less than 3 parts per million** (ppm), if the tested materials are to be shipped to a facility other than a mercury reclamation facility.

Twelve (12)-Week Average of Mercury Content. A mercury recovery facility is also required to maintain a 12-week average value of the levels of mercury contained in the processed glass and processed metals. The 12-week average is a rolling average calculated using the most recent 12-weekly test results obtained from the weekly tested composite samples. The **12-week average for total mercury content must be less than 1 ppm**, if the tested materials are to be shipped to a facility other than a mercury reclamation facility.

Quality Control Plan

The mercury recovery facility shall use an approved method for sampling and testing of the processed lamp glass and lamp metals; specifically, either USEPA Method SW846 – 1311 / 7470A (TCLP mercury) or 7471B (total mercury). Further, the Facility shall use approved recordkeeping forms for all sampling and testing activities and such forms will include a space for the name and signature of the person performing the sample collection, and the date and time of the collection inspection.

The Facility will ensure that materials are not shipped offsite until the required analytical results are received and indicate the materials are acceptable for shipping to the destination facility.

1.2 Organization of Sampling and Analysis SOP

This Sampling and Analysis SOP has been broken down into the following two sections:

- Facility Process - Operational Sampling and Analysis, and
- Facility Closure Sampling and Analysis.

2.0 FACILITY PROCESS - OPERATIONAL SAMPLING AND ANALYSIS

This section addresses the sampling and analysis that will be performed during the operational phase of the Lighting Resources, LLC Facility (Facility). This section is organized into the following parts:

- Chain of Custody Record,
- Sampling Equipment and Containers,
- Sampling Equipment and Containers Decontamination, and
- Sampling Methodology,

2.1 Chain of Custody (COC) Record

The possession or custody of samples must be traceable from the time samples are obtained until the time the samples are received at the laboratory for analysis. Lighting Resources personnel will use Chain of Custody (COC) Records and sample container labeling procedures to ensure that this occurs. Lighting Resources personnel that collect the samples will label each sample container with a sample tag (i.e., an adhesive label). The label will be filled out using waterproof ink at the time of sample collection and prior to placing it with other samples. The sample label will contain the following information:

- Name of person collecting sample,
- Unique sample identification number or code for each sample source and container,
- Time and date of the sample collection,
- Location from which sample was taken and process name,
- Weight or other information identifying quantity of subsample (e.g., one level scoop), and
- Chemical analysis which is to be performed on the sample.

Note: When daily samples are being collected in a single sample container in order to produce a "weekly sample composite of process operations," the name of sampler, collection date/military time and quantity of each sample must be recorded on a permanent daily sampling log.

The person collecting the sample will complete a COC record for each sampling event. Lighting Resources will use COC forms provided by its servicing and DEP approved laboratory to avoid duplication and potential recording errors. Two copies of the chain of custody form will accompany the sample to the laboratory. Once the laboratory receives the samples and signs the COC, a copy will be returned to Lighting Resources. All parties accepting the custody of the samples, including the sampler, coordinator, transporter, laboratory custodian, etc. must provide signatures with date and time of sample receipt on the COC form. Upon receipt of the completed COC form, Lighting Resources shall retain the completed paper copy in a loose leaf binder with the Sample Log. These forms shall be retained on site for a minimum of three (3) years.

The COC record or form will specifically contain the following information:

- Unique sample identification number or code for each sample source and container,
- Sampling site name and address,
- Name of person collecting sample,
- Time and date when final weekly sample is composited,
- Clear indication of number of sample containers,
- Chemical analysis which is to be performed on the sample,
- Appropriate places for signatures of sampler and all subsequent persons accepting custody and identification of common carriers,
- Time of day expressed in military time and calendar date of all custody transfers, and
- Comments or remarks section, e.g., unusual ambient conditions or other circumstance that may affect test results.

Note: If samples are transported via integrated intermodal air/ground transporters of small packages (e.g., Federal Express, UPS, etc.), the driver is not required to sign the COC. However, the parcel tracking number must be recorded on the COC by the sending party.

Copies of the COC records will be maintained for a period of at least 3 years in a loose-leaf binder or bound notebook.

2.2 Sampling Equipment and Containers

Samples shall be obtained using a stainless steel scoop or shovel. A stainless steel spatula or similar device shall be used for raking off excess sample. Sample containers shall be glass with screw top lids..

2.3 Sampling Equipment and Sample Container Decontamination

Lighting Resources has ordered all stainless steel instruments and sampling jars with screw-on lids for sampling at their Ocala, Florida Facility. All instruments and containers will be cleaned with ES7X® Laboratory detergent (or approved equivalent). The steps outlined below shall be followed to decontaminate sampling equipment and containers.

1. Disassemble equipment if possible.
2. Wash thoroughly with ES7X® Laboratory detergent (or approved equivalent) and hot tap water using a brush to remove any particulate matter or surface film.
3. Rinse thoroughly with deionized water and allow to air dry.
4. Wrap completely with plastic (“shrink”) wrap to prevent contamination during storage or prior to use.

2.4 Sampling Methodology

Facilities running more than one process line shall conduct required process (operational) sampling on each process line. The steps outlined below will be followed to collect samples for analytical laboratory testing of mercury.

Daily Samples

The steps outlined below will be followed to collect daily samples.

1. Daily samples will be collected in individual containers and composited later into the weekly composite sample or as equal daily aliquots into a single container which will then become the weekly composite sample. Samples will be collected in containers supplied by the laboratory authorized to perform the analytical testing of the samples.
2. A minimum sample size of 50 grams will be collected for the daily samples in order to ensure that the minimum required 150-gram weekly composite sample is collected during weeks when equipment may not be operational every day. Smaller daily samples may be used as long as the required 150-gram weekly composite sample can be obtained from equal size daily samples. (*Note: On days when equipment is not operational, no daily sample shall be taken. Daily samples shall not be "doubled up," i.e., two daily samples collected on the same day, to make up for daily samples when equipment is not operational).* The weekly composite shall consist of equal aliquots of daily samples collected on days when equipment is operational. For example, if the equipment is operational for only three days during a particular week, that week's weekly composite sample shall consist of equal aliquots of the daily samples collected during the three days when the equipment was operational.
3. Daily samples will typically be collected during maximum daily throughput and when equipment has been operating for at least 30 minutes. However, daily samples shall be collected if the equipment is operated for any period of time during that day. If the equipment is operational for *only* 2 days or less in a particular week, no weekly composite sample shall be required for that week. However, the daily samples for those one or two days shall still be collected and used as part of the next weekly composite sample.
4. Representative Sampling:
    a. Processed metal endcap assembly material - daily sample material shall be collected using one of the following three procedures listed below.
        - Procedure 1: Representative sampling of processed metal endcap assembly materials as the material exits the process line.
            - Processed metal endcap assembly material as it exits the process line may not be ground, milled, sized or sieve-separated in any way prior to daily sample collection unless such grinding, milling, sizing or sieve-separation is a part of the Facility's material processing operational procedures.
            - Lab aliquots must include portions of all components of the end cap assembly as contained in the 150-gram weekly composite sample required in the SOP. For example, if the weekly 150-gram composite sample contains at least one whole endcap which includes aluminum

outer cap material, pins and filaments, then the lab aliquot must be taken from a whole endcap which includes aluminum outer cap material, pins and filaments and must contain portions of the aluminum outer cap material, pins and filaments.

- Material shall be collected between the point at which the material exits the equipment and the bin or container which accumulates the material.

- Procedure 2. Representative sampling of endcap assembly processed material after the material exits the process line.
  - Grind to particle size which passes through a #4 sieve using a grinder or mill. This particle size makes the individual parts of the endcap assembly (i.e., aluminum outer cap material, pins and filaments) indistinguishable from each other. Grinding may be performed by either the facility owner/operator or the testing laboratory.
  - The lab aliquot shall be selected from the ground particles.
- Procedure 3. An alternate representative sampling procedure for sampling endcap assembly processed material that can be requested by a mercury recovery facility for approval by the DEP prior to implementation.
  - At a minimum, this procedure must include representative sampling of endcap assembly processed material (NOTE: metal end caps will be whole and intact — no grinding will be performed). For example, if the weekly 150-gram composite sample contains at least one whole end cap which includes aluminum outer cap material, pins and filaments, then the lab aliquot must be taken from a whole end cap which includes aluminum outer cap material, pins and filaments and must contain portions of the aluminum outer cap material, pins and filaments.
  - The procedure must comply with the SOP unless the DEP approves equivalent alternate procedures not specified in the SOP.

b. Processed glass material shall be collected between the point at which the material exits the process equipment and the bin or container which accumulates the material.

5. Sampling equipment and containers shall be decontaminated according to specified protocols in **Section 2.3**. Permanent (non-disposable) sampling equipment shall be decontaminated at least once per week with daily decontamination recommended.
6. Overfill of sampling equipment (e.g., scoop, with material collected): rake off the excess material with a spatula or knife. Empty into pre-cleaned sample container.
7. Repeat Step 5 until the required quantity is obtained. Record subsample information in permanent daily sampling log (see Chain of Custody Record, Section 2.1 - “Note”) if daily samples are being collected in a single sample container as part of weekly composite sample.

Weekly Composite Samples

The steps outlined below will be followed to composite weekly samples for analytical laboratory testing of mercury.

1. Place all previous daily subsamples (whether collected in separate containers or as equal daily aliquots collected in a single container) in a stainless steel, glass or aluminum (or plastic, unless sample is too hot) tray. The sample containers shall be cleaned according to protocols listed in the laboratory's current DEP approved comprehensive Quality Assurance Plan.
2. The sample in the tray shall be homogenized thoroughly by alternately mixing, dividing, and remixing the sample.
3. After thorough mixing, transfer sufficient sample to the appropriate sample container(s) leaving minimal headspace.
4. Clean the outside and rim of the sample container to remove excess material.
5. Affix sample label and complete the COC forms.
6. Holding time shall not exceed 28 days.

3.0 FACILITY CLOSURE SAMPLING AND ANALYSIS

3.1 Notification

The DEP District Office Waste Program Administrator must be notified in writing by certified mail that the Facility is being closed at least 30 days prior to initiation of any closure activities.

3.2 Documentation

The closure documentation shall consist of a field log(s).The field log(s) must be maintained for the Facility closure and made available to the DEP upon request. The field log(s) must be maintained for a period of at least 3 years in a loose-leaf binder or bound notebook. All entries shall be made in the Facility or in the field, not from a remote office. Entries shall be made in waterproof ink and all mistakes shall have one line drawn through and initialed. The field log(s) shall include the information list below.

General Information:

- Site name and address and DEP facility permit number,
- Dates and military times of all closure activities,
- Names of all personnel on-site and company affiliation,
- Ambient conditions (e.g., temperature and humidity inside, weather outside).
- Signature of sampler(s), and
- Site sketch indicating location of facility and sampling points.

Sampling Information:

- Date and military time of sample collection,
- Specific description of sample location (e.g., along north process room wall, outdoor trailer storage area, etc.)
- Type of sample (e.g., soil to depth of 15 cm, first wash down rinsate, vacuum residuals, etc.), and
- Unique sample identification number or code for each sample source and container.

3.3 Chain of Custody (COC) Record

The possession or custody of samples must be traceable from the time the samples are obtained until final disposal of the sample. Lighting Resources will ensure the sample container is secured to prevent tampering, it is placed in a designated, secured area, or it is in actual physical possession of the sampler.

The sampler shall label the sample container with a sample tag (i.e., an adhesive label). The label shall be filled out using waterproof ink at the time of sample collection prior to placing it with other samples. The label shall contain the following information:

- A unique sample identification number or code for each sample source and container,
- The date and military time of sample collection, and
- The chemical analysis that is to be performed on the sample.

The sampler shall complete a chain of custody record concurrent with the sampling event. Two copies of the chain of custody form shall accompany the sample to the laboratory. Once the sample transporter signs out and receiver signs in, one copy shall be retained by the laboratory and one copy shall be retained by the transporter who will deliver it to the party collecting the sample. All parties except a common carrier accepting the custody of the samples, including the sampler, coordinator, transporter, laboratory custodian, etc. shall provide signatures with the date and time of sample receipt on the chain of custody form. The COC record shall specifically contain the following information:

- Unique sample identification number or code for each sample source and container,
- Sampling site name and address,
- Name of personnel collecting sample,
- Time and date of the sample collection when final weekly sample is filled,
- Clear indication of number of sample containers,
- Chemical analysis which is to be performed on the sample,
- Appropriate places for signatures of sampler and all subsequent persons accepting custody and identification of common carriers,
- Time of day and calendar date of all custody transfers, and
- Comments or remarks section, e.g., unusual ambient conditions.

Note: If samples are transported via integrated intermodal air/ground transporters of small packages (e.g., Federal Express, UPS, etc.), the driver is not required to sign the COC. However, the parcel tracking number must be recorded on the COC by the sending party.

3.4 Sampling Equipment and Containers

Only pre-cleaned glass with screw tops shall be used for sample containers. All other sampling equipment used (e.g., spoons, scoops, shovels, hand bucket augers, mixing trays, bailers, etc.) shall be constructed of stainless steel or Teflon . . Sampling equipment shall be used for the sampling of liquid residuals, solid residuals, and soils. Sample container decontamination shall follow the procedures outlined below in **Section 3.5**.

3.5 Sampling Equipment and Sample Container Decontamination

The steps outlined below shall be followed to decontaminate sampling equipment and containers.

1. Disassemble equipment if possible.
2. Wash thoroughly with reagent grade detergent (Alconox, Liquinox or approved equivalent) and hot tap water using a brush to remove any particulate matter or surface film.
3. Rinse thoroughly with hot tap water.
4. Rinse thoroughly with 10% nitric acid (HNO^3) solution or approved equivalent. Note, 10% nitric acid solution is made by adding one part concentrated nitric acid to five parts deionized water.

5. Rinse thoroughly with deionized water and allow to air dry.
6. Wrap completely with plastic wrap to prevent contamination during storage or prior to use.

Note: Step #4 is not necessary for ferrous (e.g., stainless steel, sampling equipment). Since closure sampling, testing, and decontamination activities will be performed by a third party contractor, the contractor will utilize equipment and methods approved by both DEP and Lighting Resources.

3.6 Sampling Methodology

The Facility closure involves sampling and analysis of four (4) different types of materials:

- Decontamination solid residuals,
- Decontamination liquid residuals,
- Surface wipes, and
- Soils.

The procedures for sampling of these four types of materials are presented in the following paragraphs.

Sampling of Decontamination Solid Residuals

For the purposes of this subsection, decontamination solid residuals refer to floor and equipment sweepings or vacuum residuals, PPE, wipes, or other solid materials resulting from decontamination of the Facility process equipment and the Facility building. The protocol and procedures outlined below shall be followed for the sampling of decontamination solid residuals.

- The minimum sample size shall be 200 grams.
- Sampling equipment shall be decontaminated according to the specified protocols in **Section 3.5** above.
- Collect composites of randomly collected samples of residuals. The number of aliquots shall vary depending upon the quantity of materials being analyzed and subject to the approval of the DEP project engineer.
- Sample collection (e.g., overfill scoop and rake off excess), record subsample information, and mixing procedures shall all follow procedures listed in **Section 2.4** - "Daily Samples" and "Weekly Composite Samples."
- After thorough mixing (if required), place or transfer the sample into the appropriate sample container(s) leaving minimal headspace.
- Clean the outside and rim of the sample container to remove excess material. Cap sample container.
- Affix sample label and complete the chain-of-custody record / form.
- Holding time shall not exceed 28 days.

Sampling of Decontamination Liquid Residuals

For the purposes of this subsection, pits, ponds, and lagoons refer to any basin, pit, or open tank (lined or unlined) which contains or is suspected of containing unknown concentrated liquid, solid, or sludge chemical wastes. There are no pits, ponds, lagoons, basins, or open tanks on the Lighting Resources Facility property. There is a holding tank located in the sump area of the loading / receiving dock area. For purposes of this subsection, the liquid contained within this holding tank shall be deemed to be decontamination liquid residuals. The protocol and procedures outlined below shall be followed for the sampling of these decontamination liquid residuals.

- Sampling locations shall be representative. All phases (liquid phases, floating solids, and sludge) in the holding tank shall be sampled.
- Because of the dangers involved with container sampling, the sampling of either unknown materials or known hazardous materials shall be considered a hazardous duty assignment. Additional information regarding container sampling is available in the draft USEPA *Safety Manual for Hazardous Waste Site Inspections,* USEPA, Draft 1979. Safety procedures for container sampling shall be in accordance with the USEPA Region IV *Field Health and Safety Manual,* USEPA, Region IV, 1990 Edition (or latest edition).
- All equipment shall be decontaminated according to the specified protocols in contained in **Section 3.5**
- Holding time shall not exceed 28 days. Water samples shall be preserved with nitric acid (HNO^3) or approved equivalent. Solid waste and concentrated waste samples have no preservative requirements. Soil samples must be preserved at 4°C.
- The following equipment shall be used for field use in collecting liquid waste samples from the holding tank: sampling containers affixed to a piece of conduit pipe, stainless steel scoop affixed to a piece of conduit pipe with a scoop bracket, stainless steel spoon affixed to a conduit pipe, peristaltic pump and tubing arrangement, and Bacon-Bomb samplers. For sludge sampling, stainless steel scoops attached to conduit pipe, stainless steel push tubes and corers shall be available.

The protocol and procedures for the sampling of the **three (3) phases — liquid, floating solids, and sludge**, of decontamination liquid residuals are presented in the following paragraphs.

<u>Liquid Waste Sampling Protocol / Procedures</u>. The protocol and procedures outlined below shall be followed for the sampling of the liquid phase of decontamination liquid residuals.

- Minimum sample size is 100 ml.
- Discrete samples shall be collected and containerized / labeled separately to distinguish potential contaminant levels for each affected area.Phase Separation or Stratification of Container Contents:
  - When this condition occurs, or is suspected, care must be taken to insure that the sample collected is representative of the container contents. If only one layer or phase is sampled, this should be noted and taken into account when interpreting analytical results.
  - Determine whether phases are present by using a peristaltic pump.

  - The tubing attached to the pump is strapped to a piece of conduit pipe and slowly lowered to the bottom of the unit to be sampled.
  - The pump discharge (and the intake tubing) is examined to determine if phases are present.
- If phases are present, collect a sample of all phases.
  - The top liquid phase can be sampled by direct dipping with the sample container, or dipping with the sample container attached to the conduit pipe - either directly or by way of a fishing pole type arrangement, or dipping the sample with a stainless steel scoop attached directly to conduit pipe with a scoop bracket.
  - Alternatively, all liquid phases can be sampled with a peristaltic pump and tubing arrangement with the tubing attached to a conduit pipe and held at the desired depth.
- If phases are not present, samples may be composited by depth (i.e., collected throughout the entire depth of the container or at several different depths) to provide a representative sample. Samples shall not be composited across containers. Composite samples may be collected using a coliwasa sampler or a glass profile tube.
  - *Coliwasa Sampler*. The coliwasa sampler is a single use glass sampler, consisting of an outerglass tube with one end tapered, and a separate inner glass tube with a small bulb on one end.
    1. Slowly lower the outer tube into the unit being sampled, tapered end first. This must be done slowly for two reasons. One, the drum may contain solid material which might break the tube and injure the sampler. Second, slowly lowering the tube allows the liquid phases in the unit to stay in equilibrium with the coliwasa sampler, ensuring a representative sample.
    2. Insert the inner glass tube (bulb end first) into the outer tube. This may be done very slowly after the outer tube is fully inserted into the unit or the inner tube may be inserted prior to immersing the outer tube. In the latter case, the bulb tip of the outer tube must be pulled back several inches from the tapered end of the outer tube.
    3. After both inner and outer tubes are inserted into the unit to be sampled, press the inner tube bulb end gently against the tapered end of the outer tube, forming a seal.
    4. Withdraw both tubes from the pit, pond, or lagoon and the ends of the tubes are held over the sample container.
    5. Place the sample in the sample container. By manipulating the inner tube, the sampler can control the rate of flow of the sampled liquid into the sample container.
  - *Glass Profile Tube Sampler*. Samples can also be collected using a four-foot length of glass tube with a ½-inch or less inside diameter.
    1. Insert the tube into the opening of the pit, pond, or lagoon as far as possible.

2. Seal the open end either with the thumb or a rubber stopper to hold the sample in the tube while removing the tube from the container.
3. Place the sample in the appropriate container.
4. Repeat the procedure until an adequate amount of sample is collected.

– *Optional Samplers*. Other sampling procedures including the use of automatic samplers, pumps, siphons, multiple valves and ports, etc., may be used depending on the specific container involved.

Floating Solids Sampling Protocol / Procedures. Floating Solids can be sampled directly or with a stainless steel scoop or with a spoon attached to a piece of conduit pipe, if necessary.

Sludge Sampling Protocol / Procedures. The protocol and procedures outlined below shall be followed for the sampling of the sludge phase of decontamination liquid residuals.

- Minimum sample size is 200 grams.
- If the sampling technique involves multiple aliquots, or if the final sample will consist of aliquots from several different locations in the unit to be sampled, all aliquots should be placed into a Pyrex dish, a large glass sample container or other suitable container and mixed thoroughly before containerization.
- A stainless steel push tube or stainless steel scoop may be used to collect the sample.
  - *Stainless Steel Push Tube*. If a stainless steel push tube is used to collect the sample, the following steps shall be taken:
    1. Push the stainless steel push tube into the sludge.
    2. Empty the tube contents into a Pyrex dish, a large glass sample container or other suitable container. “Emptying” may include shaking to remove sludge or extrusion of thick or gummy sludges with a new wooden dowel. A disadvantage of this technique is the need for multiple insertions of the tube into the sludge to collect sufficient sample volume.
    3. Repeat the procedure until an adequate amount of sample is collected.
  - *Stainless Steel Scoop*. If a stainless steel scoop is used to collect the sample, the following steps shall be taken:
    1. Insert the scoop into the sludge. Attach a scoop to a piece of conduit pipe with a scoop bracket, if necessary. The scoop bracket has a decided advantage in that it allows sampling personnel to adjust the angle between the scoop and the conduit pipe.
    2. Empty the scoop contents into a Pyrex dish, a large glass sample container or other suitable container.
    3. Repeat the procedure until an adequate amount of sample is collected.

Sampling of Surface Wipes

The protocol and procedures outlined below shall be followed for the sampling of surface wipes.

- Equipment. The following equipment shall be used:
  - Wipe filter papers (Whatman Quantitative Grade 41 or 42 Filter Papers or equivalent),
  - 5% nitric acid (HNO_3) or approved equivalent, and
  - Scintillation vials, 20-ml with polypropylene or Teflon cap liners. Metal cap liners should not be used.
- Sampling Methodology. The following sampling methodology shall be utilized:
  1. If multiple samples are to be taken, prepare a rough sketch of the area(s) that are to be wipe sampled.
  2. Use a new set of clean impervious gloves with each individual sample. This avoids contamination of the filter by the hand and the subsequent possibility for false positives and prevents contact with the substance.
  3. Moisten the filter with 5% nitric acid (HNO_3) or approved equivalent.
  4. Wipe a section of the surface to be sampled using a template with an opening exactly 100 cm^2. For irregular surfaces, the wiped area shall be as close as possible to 100 cm^2, estimated as accurately as possible and documented.
  5. Maximum pressure shall be applied when wiping.
  6. To insure that all portions of the area are wiped, start at the outside edge and progress toward the center making concentric squares of decreasing size.
  7. If the filter dries out during the wiping procedure, discard the filter, reduce area to be wiped by half, document the reduced area size and repeat wiping procedure with a new filter.
  8. Without allowing the filter to contact any other surface, fold the filter with the exposed side in, then fold it over again. Place the filter in a sample vial, cap the vial, number it, place a corresponding number at the sample location on the sketch. Then complete the sample label and COC record.
  9. At least one blank filter treated in the same fashion, but without wiping, shall be submitted for each sample area.

Sampling of Soils

The protocol and procedures outlined below shall be followed for the sampling of soils.

- General Sampling Requirements. The following protocol / procedures shall be followed:
  - All equipment shall be decontaminated according to specified protocols in **Section 3.5**.
  - Sample containers shall be glass with screw top lids..
  - Holding time shall not exceed 28 days. The sample containers shall be cleaned according to protocols listed in the laboratory's current DEP approved comprehensive Quality Assurance Plan.
  - The minimum sample size shall be 200 grams.

- Sample Handling Protocols. The following sample handling protocols shall be followed after sample acquisition:
  1. Breakdown the sampler (e.g., split spoon) if necessary. This shall be done with the appropriate tools.
  2. At this time, any portion of the sample that has been disturbed shall be identified, removed with a stainless steel spatula and discarded.
  3. Slice the sample using a clean, decontaminated spatula from the center portion of the sampler (e.g., corer, split spoon or bucket auger head) and place in a stainless steel, glass or aluminum foil-lined tray.
  4. The sample in the tray shall be homogenized thoroughly by alternately mixing, dividing, and remixing the sample.
  5. After thorough mixing, transfer the sample to the appropriate sample container(s) leaving minimal headspace.
  6. Clean the outside of the sample container to remove excess soil.
  7. The container rim shall also be cleaned of soil and sand particles so that the lid can be sealed.
  8. Affix sample label, seal and complete the chain-of-custody forms.
  9. Liners:
     a. If properly used, liners may be inserted into the sampler and used as the actual sample container.
     b. Be aware that USEPA Test Methods for Evaluation of Solid Waste, SW-846, has mandated that all solid samples must be transported in containers that have screw tops. This also means that all container and lid requirements are still in effect.
     c. The ends of the liner shall be covered with polyethylene, Teflon or aluminum foil sheeting. The sheeting shall be secured by placing an end cap over the sheeting.
     d. With any sample containerized this way, specific instructions shall be sent with the sample so that the laboratory will know how to handle the sample. All non-volatile samples shall be homogenized by the laboratory prior to analyses. Also, any disturbed portions of the sample shall be discarded prior to mixing.
- Composite Soil Sampling. If more than one soil sample is required at a given location (i.e, at various interval depths, or within a few feet of each other), composite soil samples only from the same collection depth may be composited, and the following protocols shall be followed:
  1. Sample aliquots (of identical size) to be composited shall be placed in a mixing tray and thoroughly mixed with a cleaned spoon, or spatula. The sample shall be thoroughly blended by mixing, and dividing into sections. Each section shall then be mixed separately. Recombine all mixed sections and mix thoroughly. Repeat sectioning and mixing process to ensure proper homogenization.
  2. The origin and size of each (sub)sample or aliquot that is used to make the composite shall be documented in the field notebook along with the other important sampling details. Although the size of these subsamples is important and should be documented, it is critical that these subsamples be of equivalent

size, so that the composite sample is not biased by unequal aliquoting. Aliquoting should be done in a systematic manner.

3. Clean the outside of the sample container to remove excess soil, affix label, seal, and complete the COC record.

- Discrete Soil Sampling. If a relatively small site area is to be investigated for contamination, discrete sampling shall be performed and the following protocol / procedures shall be followed:
  - Soil sampling locations should be selected such that a representative portion of the soils are collected with minimal disturbance with the concurrence of the DEP closure project engineer.
  - Surface soil sampling (ground surface to 6-inches below ground surface):
    - Leaves, grass and surface debris shall be removed from the area to be sampled using a clean stainless steel spoon or shovel.
    - Surface soil samples shall then be collected using a pre-cleaned stainless steel scoop or spoon.
  - Shallow subsurface soil sampling (6 inches to 2 feet below ground surface):
    - Shallow subsurface samples shall be collected by digging a hole or trench to the required depth with a stainless steel shovel.
    - Some situations may require a trench or pit to be dug with a backhoe. Depending upon the equipment available at the site or the soil type to be penetrated, this option is acceptable. Note that any OSHA requirements for in-trench sampling shall be followed. In these situations, the trench shall be first dug to the appropriate depth, and then the sample shall be exposed by using one pre-cleaned spoon, spatula, or equivalent to clean away the soil that came in contact with the backhoe bucket, and a second pre-cleaned spoon shall be used to collect the sample.
    - Alternatively, shallow subsurface soil samples may be collected with a 2 to 4-inch steel hand auger which would minimize the soil to be removed in order to reach the desired depth. Using this method, a sampling depth of up to 2 feet shall be obtained.
      1. A soil sample shall be obtained by pushing and rotating the auger into the soil until the bucket is filled.
      2. The sample shall be removed from the bucket by pushing or scraping with an appropriate pre-cleaned stainless steel tool.
      3. The addition of a sleeve may be used to allow an undisturbed soil sample to be obtained.
      4. The device shall consist of a standard auger head with a removable non-contaminating sleeve which is inserted into the auger barrel.
      5. The soil sample is obtained in the normal manner by pushing and rotating the auger into the soil. In this case it is the sleeve which fills with soil. After auger retrieval, the sleeve, which is readily removed from the auger, is capped.
      6. If the auger hole is prone to collapse, due to low cohesion in some soils, a temporary rigid PVC casing should be inserted into the

hole. The casing prevents hole collapse and minimizes cross-contamination between soil zones as the auger is advanced. Upon sample collection, the temporary casing (if used) must be removed and the hole filled with the excavated soil. If a confining layer has been breached during sampling, the hole shall be grouted to land surface with Type-1 Portland Cement. Note, this requirement may be different throughout Florida — contact the local Water Management District office for local requirements.

Appendix F

C1osure Costs

F1 C1osure Costs Estimate

F2 Service Provider Costs

Lighting Resources
Renewal Application

TABLE 7-3
LIGHTING RESOURCES, LLC - OCALA, FL
MERCURY RECOVERY FACILITY DEP RENEWAL APPLICATION _ REVISION NO. [1]
CLOSURE COST ESTIMATE (FEBRUARY 2017)

Line Item #	Description		Service Provider / RS Means Name	Location	Units	Quantity	Unit Cost	Total Cost	Notes
REMOVAL OF WASTE & RECYCLABLE MATERIAL INVENTORY: *(assume worst cast scenario (i.e., maximum inventory))*									
Mercury-Containing Lamps (MCLs):									
1	**Unprocessed MCLs**	**Transport** by Hauler (unlicensed) to DEP permitted mercury recovery / reclamation facility	HUB	Chicago, IL	semi-trailer	6	$525.00	$3,150	Conservatively assumed 140,000 T-12 / 4-ft lamps — however, the calculation of storage capacity yielded 139,104 lamps, and to be conservative in this cost estimate it was assumed that 140,000 lamps would need handling/ removal from site. HUB contracts locally with a transporter in Jacksonville, FL; 2.8 semi-trailer trucks needed based on calculation of 48 pallets per truck, 8 lamp boxes per pallet, 69 lamps per box, 552 lamps per pallet (69 x 8), 26,496 lamps per trailer -truck (552 lamps x 48 pallets); therefore the 6th truck will have space for 33 addtl pallets. Contact- Evan Singley (with HUB) 630.437.6053
		Processing by DEP permitted mercury recovery / reclamation facility (cost is all incl.)	AERC Recycling Solutions	West Melbourne, FL	linear foot	560,000	$0.035	$19,600	140**,000** T-12 / 4-ft lamps = (140,000 x 4 ft) = 560,000 linear feet [See 9a and 9b below]
2	**Unprocessed: Crushed / Unintentially Broken MCLs**	**Transport** by hazardous waste licensed hauler to an authorized, state permitted mercury recovery / reclamation facility	Freehold Cartage / RS Means	Bartow, FL	**see note**	**see note**	$2,683	$2,683	Fifty-six (56) 55-gallon drums will have to be transported. Freehold Cartage will most likely be used, however to be conservative the pricing for transportation was obtained from RS Means Environmental Remediation Cost Data (2006). The Means pricing was adjusted from 2006 dollars to 2013 dollars using DEP inflation factors (refer to DEP website). Assumed travel distance of 500 miles from Ocala, FL to Williamston, SC. The RS Means minimum shipping charge of $2,683 (incl. inflation) - RS Means Cost Code #33-19-0202 was greater than the per mile charge of $1,280 ($2.56 per mile @ 500 miles, incl. inflation) - RS Means Cost Code #33-19-0213; therefore, the cost of $2,683 was used. Refer to Excel File (for RS Means costs) saved on disk contained in Appendix F within the Engineering Report.
		Processing by an authorized, state permitted mercury recovery / reclamation facility (cost is all incl.)	Waste Management Lamp Tracker Inc.	Williamston, SC	lbs	28,000	$1.05	$29,400	Assume 500 lbs per 55-gal drum x 56 **drums** = 28**,000 lbs. [See 9a & 9b below]**
3	**Phosphor Powder**	**Transport** by hazardous waste licensed hauler to DEP permitted mercury recovery / reclamation facility	Freehold Cartage	Bartow, FL	55-gal. drum	32	$52.00	$1,664	Minimum 9-drums per transport at $50 per drum plus 4% surcharge fee (equals a total of $52 per drum). Each drum assumed to weigh 750-lbs each. Freehold contact - Andrew / Mike Avery, 863.287.1830
		Processing by DEP permitted mercury recovery / reclamation facility (cost is all incl.)	Veolia Environmental Services	Tallahassee, FL	55-gallon drum	32	$254.25	$8,136	$225 per drum plus 13% surcharge (equals a total of $254.25 per drum)
4	**Separated Glass Cullet** (i.e., passes TCLP for Mercury)	**Test** material to confirm it passes TCLP for Mercury	Columbia Analytical Services	Jacksonville, FL	1-test per sample	4	$40.00	$160	EPA Method 7470; Columbia Analytical Services contacted for pricing at 1-800-695-7222
		Transport by Hauler to Marion County Baseline Landfill for disposal	Florida Express Environmental	Ocala, FL	Rolloff	4	$200.00	$800	Florida Express Env. Contact - John Paglia at 352.369.5411 ext 205.
		Landfill Disposal at Marion County - Baseline Landfill	Baseline Landfill	Marion County, FL	ton	60	$42.00	$2,520	Marion County - Baseline Landfill charges a fee of $42/ton. Based on published data, the unit weight of crushed cullet glass <= to 30,000 lbs per rolloff; therefore to be conservative a rolloff container was assumed to weigh 30,000-lbs. The total weight is therefore equal to: (4 rolloffs x 30,000-lbs/rollfoff) = 120,000-lbs or 60-tons.
5	**Separated Metal End Caps / Metal Comp.** (i.e., passes TCLP for Mercury)	**Test** material to confirm it passes TCLP for Mercury	Columbia Analytical Services	Jacksonville, FL	1-test per sample	4	$40.00	$160	TOTALL Metal Recycling provides free hauling of metal end caps and pays Lighting Resources a fixed dollar amount based on a buy-back agreement (ranges from $5,800 to $12,000 - - depending upon volume. Each drum assumed to weigh 750-lbs. **PLEASE refer to Appendix F** contained within the Engineering Report for a copy of a letter from TOTALL Metal Recycling to Lighting Resources, LLC , stating that in the event of Facility closure (LRL - Ocala, FL), TOTALL Metal Recycling will continue to take the materials (i.e., metal end caps, non-pcb ballasts, e-waste, dry-cell batteries and lead acid batteries) from Lighting Resources in Ocala, Florida at no cost. Contact - Matt VanDorn, phone number 618-877-0585.
		Transport by Hauler to an authorized metals reclaimer	TOTALL Metal Recycling	Granite City, IL	55-gallon drum	60	**no charge**	**see note**	
		Metals Recycling by authorized recycler / reclaimer	TOTALL Metal Recycling	Granite City, IL	55-gallon drum	60	**no charge**	**see note**	

Lighting Resources
Renewal Application

TABLE 7-3
LIGHTING RESOURCES, LLC - OCALA, FL
MERCURY RECOVERY FACILITY DEP RENEWAL APPLICATION _ REVISION NO. [1]
CLOSURE COST ESTIMATE (FEBRUARY 2017)

Line Item #	Description		Service Provider / RS Means Name	Service Provider / RS Means Location	Units	Quantity	Unit Cost	Total Cost	Notes
Mercury-Containing Devices (MCDs):									
6	**MCDs: Thermometers, Thermostats, Switches, Relays and Manometers**	**Transport** by Hauler (unlicensed) to DEP permitted mercury recovery / reclamation facility	Veolia Environmental Services	Tallahassee, FL	55-gallon drum *	4	$56.50	$226	* $50 per drum plus 13% energy and security surcharge (equals a total of $56.50 per drum). Each drum assumed to weigh 750-lbs.
		Processing by DEP permitted mercury recovery / reclamation facility (cost is all incl.)	Veolia Environmental Services	Tallahassee, FL	55-gallon drum *	4	$242.95	$972	* $215 per drum plus 13% energy and security surcharge (equals a total of $242.95 per drum). Each drum assumed to weight 750-lbs.
Lead Acid Batteries:									
7	**Small / Other Type Batteries: Alkaline, Gel Cells, Lead Acid, Lithium-Ion, Magnesium, Mercury, Ni-Cad, Ni-MH, and Silver Oxide and Automotive & Large Equipment Lead Acid Batteries**	**Transport** by a licensed hazardous waste hauler to a facility permitted and authorized to receive and process such battery type materials	Freehold Cartage / RS Means	Bartow, FL	**see note**	**see note**	$2,683.00	$2,683	Twenty-Four (24) 55-gallon drums will have to be transported. Freehold Cartage will most likely be used, however to be conservative the pricing for transportation was obtained from RS Means Environmental Remediation Cost Data (2006). The Means pricing was adjusted from 2006 dollars to 2013 dollars using DEP inflation factors (refer to DEP website and Excel File saved on disk in Appendix F in the Engineering Report). Assumed travel distance of 1,000 miles from Ocala, FL to Granite City, IL. The RS Means minimum shipping charge of $2,683 (incl. inflation) - Cost Code #33-19-0202 was greater than the per mile charge of $2,560 ($2.56 per mile @ 1,000 miles, incl. inflation) - RS Means Cost Code #33-19-0238; therefore, the cost of $2,683 was used. Refer to Excel File (for RS Means costs) saved on disk contained in Appendix F within the Engineering Report.
		Metals Reclaimer by a facility permitted and authorized to receive and process such battery type materials	TOTALL Metal Recycling	Granite City, IL	lbs	18,000	**no charge**	**see note**	Twenty-Four (24) drums, each drum assumed weight of 750 lbs = (12 x 750 lbs) = 9,000 lbs. T **PLEASE refer to Appendix F** contained within the Engineering Report for a copy of a letter from TOTALL Metal Recycling to Lighting Resources, LLC , stating that in the event of Facility closure (LRL - Ocala, FL), TOTALL Metal Recycling will continue to take the materials (i.e., metal end caps, non-pcb ballasts, e-waste, dry-cell batteries and lead acid batteries) from Lighting Resources in Ocala, Florida at no cost. TOTALL Metal Recycling Contact - Matt VanDorn, phone number 618-877-0585.

Lighting Resources
Renewal Application

TABLE 7-3
LIGHTING RESOURCES, LLC - OCALA, FL
MERCURY RECOVERY FACILITY DEP RENEWAL APPLICATION _ REVISION NO. [1]
CLOSURE COST ESTIMATE (FEBRUARY 2017)

Line Item #	Description		Service Provider / RS Means Name	Service Provider / RS Means Location	Units	Quantity	Unit Cost	Total Cost	Notes
Light Ballasts:									
8	**Unprocessed PCB Light Ballasts**	**Transport** by a licensed hazardous waste hauler to a facility permitted and authorized to receive / process PCB Ballasts	Freehold Cartage / RS Means	Chicago, IL	**see note**	**see note**	$3,328.00	$3,328	Ten (10) 55-gallon drums will have to be transported. Freehold Cartage will most likely be used, however to be conservative the pricing for transportation was obtained from RS Means Environmental Remediation Cost Data (2006). The Means pricing was adjusted from 2006 dollars to 2013 dollars using DEP inflation factors (refer to DEP website and Excel File saved on disk in Appendix F of the Engineering Report). Assumed travel distance of 1,300 miles from Ocala, FL to TOTALL Metal Recycling in Granite City, IL (first stop, see below Non-PCB Ballasts, Line Item # 10) and to Wisconsin Ballast in Muskego, WI (second stop, PCB Ballasts Line Item #9). The RS Means per mile charge of $3,328 - Cost Code #33-19-0240 ($2.56 per mile @ 1,300 miles, incl. inflation) was greater than the minimum shipping charge of $3,019 - Cost Code #33-19-0203 (see Excel File on disk for RS Means Costs located in Appendix F in the Engineering Report); therefore, the cost of $3,328 was used.
		Processing by a facility permitted and authorized to receive / process PCB Ballasts	Wisconsin Ballast	Muskego, WI	lbs	7,500	$0.36	$2,700	Ten (10) 55-gal drums; assumed one (1) 55-gallon drum of ballast material weighs **750 lbs.**; total weight = (10 x 750) = 7,500 lbs. Unit cost assumes incineration.
9	**Unprocessed Non-PCB Light Ballasts**	**Transport** by a licensed hazardous waste hauler to a facility permitted and authorized to receive / process Non-PCB Ballasts	Freehold Cartage / RS Means	Chicago, IL	55-gallon drum	30	**no charge**	**see note**	Thirty (30) 55-gal drums; assumed one (1) 55-gallon drum of ballast material weighs 750 lbs.; total weight = (30 x 750) =22,500 lbs. Transport of the Unprocessed Non-PCB Light Ballasts will be combined in the same trailer truck with the transport of Unprocessed PCB Light Ballasts (Line Item # 9) since Granite City, IL is en route to the Wisconsin Ballast facility located in Muskego, WI.
		Processing by a facility permitted and authorized to receive / process Non-PCB Ballasts	TOTALL Metal Recycling	Granite City, IL	lbs	22,500	**no charge**	**see note**	Thirty (30) 55-gal drums; assumed one (1) 55-gallon drum of ballast material weighs **750 lbs.**; total weight = (30 x 750) = 22,500 lbs. PLEASE refer to Appendix F contained within the Engineering Report for a copy of a letter from TOTALL Metal Recycling to Lighting Resources, LLC , stating that in the event of Facility closure (LRL - Ocala, FL), TOTALL Metal Recycling will continue to take the materials (i.e., metal end caps, non-PCB ballasts, e-waste, dry-cell batteries and lead acid batteries) from Lighting Resources in Ocala, Florida at no cost, and provide free pickup of the metal end caps and non-PCB ballasts. TOTALL Metal Recycling Contact - Matt VanDorn, phone number 618-877-0585.
	E-waste and Retail E-Waste								
9-a	**E-waste**	**Transport** by vendor to the recycle facility	U.S. Ecology	Tampa, FL	Cubic Yard Box	1	no charge	see note	Computers and peripherals have value and therefore are no charge and are picked up at the facility.
9-b	**Retail E-Waste**	**Processing** by DEP permitted reclamation facility (cost is all incl.)	U.S. Ecology	Tampa, FL	Cubic Yard Box	1	see note	see note	Assumption that Retail E-waste is 50% processed and 50 % unprocessed. Therefore 1 cubic yard box of each would be: Processed 400 lbs. x .28 = $112 plus Un processed 280 lbs. x .92 = 257.60. The average price per pallet would be $112.00 + $257.60 = $369.60/2 = $184.80. The average per pallet of MCLs with transport is $180.00. Therefore, the closure clost included for MCLs pallets would cover the Retail Ewaste pallet closure costs. Therefore the substitution of Retail E-waste for MCLs (lamps) will not change the expected closure costs for removal of material. [See 1 & 2 above]
							Subtotal:	**$78,182**	

Lighting Resources
Renewal Application

TABLE 7-3
LIGHTING RESOURCES, LLC - OCALA, FL
MERCURY RECOVERY FACILITY DEP RENEWAL APPLICATION _ REVISION NO. [1]
CLOSURE COST ESTIMATE (FEBRUARY 2017)

Line Item #	Description		Service Provider / RS Means Name	Location	Units	Quantity	Unit Cost	Total Cost	Notes
FACILITY DECOMMISSIONING & DECONTAMINATION:									
Dis-Assembly & Salvage of BALCAN MP8000 Process Equipment: *(list below)*									
10	→ Dis-Assembly	Labor to **dis-assemble and pack** for later removal by metal reclaimer	Shaw Environmental	Winter Garden, FL	hours	160	$65.00	$10,400	2-man crew for 10-days; OSHA Level C PPE; decontamination labor and costs are below.
	→ Haul for Salvage	**Transport and Reclamation** by Metal Reclaimer	TOTALL Metal Recycling	Granite City, IL	**see note**	**see note**	**no charge**	**see note**	TOTALL Metal Recycling provides free hauling and pays Lighting Resources a fixed dollar amount based on buy-back agreement for all metal end cap materials and will pickup, transport, and recycle at no cost all equipment / metals.
Removal & Decontamination of Any Hazardous Residue: *(list below)*									
11	→ Containers	**Surface Wipe** sampling to det w/ rinsate	Shaw Environmental	Winter Garden, FL	hours	16	$80.00	$1,280	2-man crew for 1-day; OSHA Level C PPE.
		Decontaminate w/ rinsate	Shaw Environmental	Winter Garden, FL	hours	20	$80.00	$1,600	2-man crew for 1-day; OSHA Level C PPE.
		Sample rinsate	Shaw Environmental	Winter Garden, FL	hours	2.5	$80.00	$200	20 samples by 2-man crew
		Test rinsate (lab cost)	Columbia Analytical Services	Jacksonville, FL	1-test per sample	20	$40.00	$800	EPA Method 7470; Columbia Analytical Services contacted for pricing at 1-800-695-7222
		Transport contaminated rinsate (leachate) by a licensed hazardous waste hauler to a Chemical Waste Landfill for disposal	Waste Management	Bartow, FL	55-gal. drum ($65 /drum + $150 pickup fee)	10	$65.00	$800	Ten (10) 55-gallon drums will have to be transported. Unit pricing of $65 per 55-gallon drum plus **ADDED** a $150 stop fee per pickup.
		Landfill Disposal of any contaminated rinsate (leachate) and other matls (e.g., rags, wipes, PPE, etc.).	Waste Management - Emelle Landfill	Emelle, AL	55-gallon drum ($248 /drum + $220 profile fees)	10	$248.00	$2,700	Ten (10) 55-gallon drums will have to be disposed of. Unit pricing of $248 per 55-gallon drum (assumes half liquid + half rags) plus ADDED ADEM and WM Profile Fees of $170 and $50, respectively.
12	→ Equipment	**Decontaminate** w/ rinsate	Shaw Environmental	Winter Garden, FL	hours	20	$80.00	$1,600	2-man crew for 1-day; OSHA Level C PPE.
		Sample rinsate	Shaw Environmental	Winter Garden, FL	hours	2.5	$80.00	$200	20 samples by 2-man crew
		Test rinsate (lab cost)	Columbia Analytical Services	Jacksonville, FL	1-test per sample	20	$40.00	$800	EPA Method 7470; Columbia Analytical Services contacted for pricing at 1-800-695-7222
		Transport contaminated rinsate (leachate) by a licensed hazardous waste hauler to a Chemical Waste Landfill for disposal	Waste Management	Emelle, AL	55-gal. drum ($65 /drum + $150 pickup fee)	10	$65.00	$800	Ten (10) 55-gallon drums will have to be transported. Unit pricing of $65 per 55-gallon drum plus **ADDED** a $150 stop fee per pickup.
		Landfill Disposal of any contaminated rinsate (leachate) and other matls (e.g., rags, wipes, PPE, etc.).	Waste Management - Emelle Landfill	Emelle, AL	55-gallon drum ($248 /drum + $220 profile fees)	10	$248.00	$2,700	Ten (10) 55-gallon drums will have to be disposed of. Unit pricing of $248 per 55-gallon drum (assumes half liquid + half rags) plus ADDED ADEM and WM Profile Fees of $170 and $50, respectively.

Lighting Resources
Renewal Application

TABLE 7-3
LIGHTING RESOURCES, LLC - OCALA, FL
MERCURY RECOVERY FACILITY DEP RENEWAL APPLICATION _ REVISION NO. [1]
CLOSURE COST ESTIMATE (FEBRUARY 2017)

Line Item #	Description		Service Provider / RS Means Name	Service Provider / RS Means Location	Units	Quantity	Unit Cost	Total Cost	Notes
13	→ Walls, Ceiling, & Floor	**Decontaminate** w/ rinsate	Shaw Environmental	Winter Garden, FL	hours	32	$80.00	$2,560	2-man crew for 2-days; OSHA Level C PPE. Main area to be decontaminated and tested is the Processing Area (70.6' x 51.6')
		Sample rinsate	Shaw Environmental	Winter Garden, FL	hours	6	$80.00	$480	48 samples by 2-man crew
		Test rinsate (lab cost)	Columbia Analytical Services	Jacksonville, FL	1-test per sample	48	$40.00	$1,920	EPA Method 7470; Columbia Analytical Services contacted for pricing at 1-800-695-7222
		Transport contaminated rinsate (leachate) by a licensed hazardous waste hauler to a Chemical Waste Landfill for disposal	Waste Management	Emelle, AL	55-gal. drum ($65 /drum + $150 pickup fee)	24	$65.00	$1,710	Twenty-Four (24) 55-gallon drums will have to be transported. Unit pricing of $65 per 55-gallon drum plus ADDED a $150 stop fee per pickup.
		Landfill Disposal of any contaminated rinsate (leachate) and other matls (e.g., rags, wipes, PPE, debris, insulation / batting - from walls and ceiling, etc.).	Waste Management - Emelle Landfill	Emelle, AL	55-gallon drum ($248 /drum + $220 profile fees)	24	$248.00	$6,172	Twenty-Four (24) 55-gallon drums will have to be disposed of. Unit pricing of $248 per 55-gallon drum (assumes half liquid + half rags) plus ADDED Alabama-DEM and WM Profile Fees of $170 and $50, respectively.
14	→ Soils	**Sample** soil	Shaw Environmental	Winter Garden, FL	hours	10	$80.00	$800	1-person OSHA Level C PPE
		Test soil (lab cost)	Columbia Analytical Services	Jacksonville, FL	1-test per sample	6	$40.00	$240	EPA Method 7471; Columbia Analytical Services contacted for pricing at 1-800-695-7222
Preparation and Travel Time for Field Work (decontamination work)			Shaw Environmental	Winter Garden, FL	hours	16	$80.00	$1,280	2-man crew (includes developing a Health & Safety Plan and Work Plan for decontamination activities)
Field Supplies, Materials, Equipment (absorbent booms,Level C PPE HEPA vacuum, mercury vapor monitor, mercury vapor analyzer, power washer, etc.), and other Direct Expenses for decon. work			Shaw Environmental	Winter Garden, FL	lump sum	1	$3,500.00	$3,500	Wash the affected area with a mercury vapor suppression solution, such as HgX®
Removal of Decontaminated Containers & Equipment by Metal Reclaimer:									
Transport and Reclamation by Metal Reclaimer			TOTALL Metal Recycling	Granite City, IL	*semi-trailers*	3	**no charge**	**see note**	TOTALL Metal Recycling provides free hauling and pays Lighting Resources a fixed dollar amount based on buy-back agreement for metal end caps. TOTALL Metal Recycling provides trailer / containers on Site (i.e, at the Lighting Resources Ocala, FL Facility).
							Subtotal:	**$42,542**	
PREPARE CLOSURE CERTIFICATION REPORT:									
Prepare draft and final report			Shaw Environmental	Winter Garden, FL	hours	40	$140	**$5,600**	Assume final site inspection, write-up of field notes/reports, prepare two review drafts and one final draft for submission to DEP.
							Subtotal:	**$126,324**	Closure Funding Schedule Calculations
							ADD 10% Contingency:	**$12,632**	Original Permit: $108,240 / 5 = $21,648 $43,296 to 6/2013
							TOTAL COSTS:	**$138,956**	Modification Increase $30,716/4 - $7,649 year 1 to 12/2013

TOTALL™ METALRECYCLING

2700 Missouri Avenue
Granite City, IL 62040
www.tmrusa.com
Toll Free: 866.470.5763
Local: 618.877.0585
Fax: 618.877.0591

March 19, 2012

Lighting Resources, Inc.
1007 SW 16th Lane
Ocala, FL 34471

To Whom It May Concern:

TOTALL Metal Recycling (TMR) currently receives metal end caps, non-PCB ballasts, e-waste, dry-cell batteries and lead acid batteries from Lighting Resources in Ocala, FL. TMR has a buyback agreement with Lighting Resources for metal end caps which includes free pickup and transport of the metal end caps from Lighting Resources' Ocala, FL facility to TMR's facility in Granite City, IL. TMR will continue to receive these materials from Lighting Resources and will accept all of these materials from them in the event of a closure at no cost. In the event of facility closure, TMR will also provide free pickup and transport of the metal end cap materials from Lighting Resources' Ocala, FL facility to TMR's Granity City, IL facility.

Regards,

Matt VanDoren
TOTALL Metal Recycling
matthewvandoren@tmrusa.com

info@tmrusa.com
www.tmrusa.com

Fax Cover Sheet

Wisconsin Ballast Inc.
W193 S6817 Hillendale Dr.
Muskego, WI 53150
Phone: (262)679-2080 Fax: (262)679-4748
www.wiballast.com | info@wiballast.com

Send to: Lighting Resources LLC
From: John Kronshage
Attention: Bonnie + Pamela
Date: 4/3/12
Fax Number: 352-509-3012
Phone Number: 262-679-2080

☐ Urgent ☐ Reply ASAP ☐ Please Comment ☐ Please Review ☒ For Your Info

Total Pages, Including Cover: 3

Comments

Letters follow —

Thanks,
John

W.193 S.6817 Hillendale Dr. Muskego, WI 53150
Phone: 262-679-2080 | Fax: 262-679-4748 | E-mail: info@wiballast.com

April 2, 2012

Attention: Bonnie Bishop Clark
Lighting Resources, LLC
1007 SW 16th Lane
Ocala, FL 34471
email: bonnie@lightingresourcesinc.com

Subject: Current pricing for regulated lighting ballast going to regulated burial

To: Lighting Resources, LLC

The current price Wisconsin Ballast Inc. can offer Lighting Resources, LLC, Ocala, FL is $.28 per total pound for the recycling/destruction of the fluorescent lighting ballast. This price is firm for the next 60 days. This does not include containers or the transport to us. It does include all associated disposal costs with the shipping to regulated burial.

Sincerely,

John Kronshage, Pres.

John Kronshage, President

Helping you to meet all of your "lighting management" recycling and disposal needs.

W.193 S.6817 Hillendale Dr. Muskego, WI 53150
Phone: 262-679-2080 | Fax: 262-679-4748 | E-mail: info@wiballast.com

April 2, 2012

Attention: Bonnie Bishop Clark
Lighting Resources, LLC
1007 SW 16th Lane
Ocala, FL 34471
email: bonnie@lightingresourcesinc.com

Subject: Current pricing for regulated lighting ballast going to incineration

To: Lighting Resources, LLC

The current price Wisconsin Ballast Inc. can offer Lighting Resources, LLC, Ocala, FL is $.36 per total pound for the recycling/destruction of the fluorescent lighting ballast. This price is firm for the next 60 days. This does not include containers or the transport to us. It does include all associated disposal costs with the shipping to incineration.

Sincerely,

John Kronshage, Pres.

John Kronshage, President

Helping you to meet all of your "lighting management" recycling and disposal needs.

AERC
RECYCLING SOLUTIONS

AERC Recycling Solutions
1475 Crocker Ave. Hayward, CA 94544
(510) 429-1129 (tel) • (510) 429-1498 (fax)

Universal Waste Recycling Pricing Schedule (Schedule B)
Lighting Resources on September 29, 2011

Material Type		Unit Price
Lamps: Straight Fluorescent (linear) per ft		$0.035/ft
Lamps: Incandescent		$0.10/ea
Lamps: U-Tube, Compact, Circular		$0.25/ea
Lamps: Shattershields/Coated		$0.80/ea
Lamps: High Intensity Discharge - *High Pressure Sodium, Mercury Vapor, Metal Halide*		$0.65/ea.
Lamps: broken fluorescent in a 55 gallon drum metal		$350/ea.
Phosphor Powder in a 55 gallon Drum metal		$450/ea.
Ballasts: PCB		$0.41/lb.
Ballasts: Non-PCB Ballasts		$0.23/lb.
PCB Capacitors		$2.00/lb
Batteries: Category 1	*Lead Acid (Pb)*	$0.25/lb.
Batteries: Category 2	*Alkaline*	$0.65/lb
	Nickel Cadmium	$1.25/lb
	Nickel Metal Hydride	0.60/lb
Batteries: Category 3	*Silver Oxide (Button) Cells*	$6.25/lb
Batteries: Category 4	*Lithium Ion(Li)*	$0.60/lb.
	Lithium (Primary)	$3.50/lb
Mixed Battery Sorting Fee	*(per 5gal container)*	$3.50
Mercury (Per Lb.)		
	Mercury Devices (Thermometers/switches)	$10.00/lb
	Mercury (Liquid/Elemental)	

AERC RECYCLING SOLUTIONS

AERC Recycling Solutions
1475 Crocker Ave. Hayward, CA 94544
(510) 429-1129 (tel) • (510) 429-1498 (fax)

Terms: Pricing valid for 90 days from Schedule date and subject to change without notice. Invoices Net 30. Credit cards accepted. $200.00 minimum invoice for drop offs; $450.00 for pick -up.

Administrative Support Service: Administrative fee of $75.00 per hour will be assessed for Additional copies or reports as requested.

Brokers Billing Fee: As a service to our Universal Waste broker customers, AERC Recycling Solutions offers administrative services to support your multiple customers: separate job orders, correspond incoming materials with separated Bills of Lading, separate Materials Receiving tickets, and separate line items on invoices.

As these services require supplemental AERC administrative response, an administrative fee of $35.00 per job order will be assessed effective on your next order. To avert this administrative fee, universal waste materials must be presented to AERC as single loads of oncoming materials (i.e., single job order, single load, single materials receiving ticket, single invoice).

Shipping Containers. (*Shipping and packaging guidelines are available for all materials).*
- Lamps should be packaged in original manufacturers' boxes, or in AERC's boxes or fiber drums. Do not tape lamps together.
- Ballasts should be packaged in a UN-Spec poly pail, poly drum or steel drum.
- Batteries should be packaged in a UN-Spec poly pail, poly drum or steel drum. Mixing batteries of different categories prohibited.
- Mercury-containing devices should be packaged individually in zipper plastic bags and then collectively in a UN-Spec poly pail, poly drum or a lined steel drum.
- Electronic scrap should be stretch-wrapped to a pallet or packed in a cardboard Gaylord box. In California, PC monitors and televisions must be separated from other electronic materials.

Mercury-Containing Devices: An additional transportation charge per container will be added for handling mercury-containing devices: $95.00/5-gallon, $175.00/greater than 5-gallon container. An AERC Hazardous Waste profile must be approved prior to shipment.

Demurrage: After the first half-hour of loading/unloading materials, a demurrage charge of $40.00 per half-hour labor, one-hour minimum, prorated in half-hour increments will be assessed.

Cancellation Charge: If a pickup or drop off is scheduled but customer or materials are not ready at the scheduled location and time, a minimum transportation fee equal to the dispatch fee may be assessed.

On-site Delivery: Drop off of universal waste materials are accepted at AERC Hayward facility by appointment only, minimum one business day advance notice required. $250.00 per incident fee assessed for the following situations:
- "No Show" at scheduled appointment time.
- Appointments cancelled less than one business day in advance.
- Same day drop off without appointment.

"Recovery Fee" - Insurance, State Permits, Security Surcharge & Taxes.
- 11% of invoice, for all invoices

Additional Labor: Additional labor fees may be assessed for collection and/or processing of wet boxes, broken lamps, sorting of contaminated or improperly comingled loads of lamps or batteries, or sorting/consolidating electronic wastes at one or more sites. $40.00 per half-hour labor, one-hour minimum, prorated in half-hour increments.

Lighting Resources

Name (print)

Name (sign and date)

AERC RECYCLING SOLUTIONS

Name (print)

Name, (sign and date)

01.2011

RATE QUOTATION

Hub Group, Inc.
The Knowledge Driven Logistics Company

Highway St. Louis
721 Emerson Rd, Suite 600
Saint Louis,MO 63141
Tel: 800-264-8632
Fax: 314-993-0918
HighwayStLouis@hubgroup.com

To: LIGHTING RESOURCES LLC
Attention: EVAN S

Prepared By: Bryan Trauterman - HCSO
Salesperson: HOUSE ACCOUNT - CENTRAL

Origin City	St	L/D	Destination City	St	L/D	Mode	Srvc	Miles	Trans Days	Rate/Mile	Minimum	Total Price	Effective Date	Expiration Date
OCALA	FL	L	WEST MELBOURNE	FL	L	VAN	SING	133.00		FLAT		$525.00	11/16/2011	12/16/2011

Comment: RATE IS ALL IN FOR 525.00

Comments:

* Listed rates do not include fuel surcharges (FSCs) and are subject to the FSCs which are in place at the time of dispatch. Any FSCs that apply will appear as a separate line item on invoices. By tendering a shipment to Hub, you agree to pay any such FSCs applicable to such shipment. Hub's default fuel surcharge schedule is available upon request.
* FSCs are subject to change every Tuesday, based on Monday's Department of Energy diesel fuel index. If Monday is a holiday, then such changes will occur on Wednesday.
* Unless noted, the quoted price does not apply to shipments involving Hazardous Materials. An additional surcharge shall apply to shipments of Hazardous Materials.
* In addition to the quoted rates, shipments are also subject to accessorial, detention and storage charges. By tendering a shipment to Hub, you agree to pay any such accessorial, detention and storage charges applicable to such shipment. Hub's standard accessorial, detention and storage charge schedule is available upon request.
* Rates offered by this letter are good for 30 days from the effective date stated (or if none stated, the date of this letter) unless otherwise noted.
* R[illegible]es into Mexico do not include any border crossing, brokers or duty fees, or Mexican IVA Transportation Tax.
[illegible]ght of shipments tendered to Hub's underlying carriers cannot exceed legal limits.
[illegible]hipments are tendered freight released to Hub's underlying carriers for cargo loss or damage at an amount not in excess of $250,000 for Intermodal/Rail loads and $100,000 for Over the Road Truck loads. Absent Hub's direct negligence, Hub has no liability for cargo loss or damage (though Hub will assist the shipper in prosecuting any claims for freight loss or damage against the underlying carriers) and in no event shall Hub's liability per shipment for cargo claims exceed $100,000. Shipper may obtain greater levels of cargo liability from the underlying carriers for an additional fee. Notwithstanding the foregoing, Hub and/or its underlying carriers shall not be liable for any loss or damage to cargo if or when a shipment is in transit in or is located in Mexico. The minimum claim amount is $250 on all shipments. In no event shall Hub be liable for incidental, consequential or special damages.
* All values are set forth in U.S. Dollars.
* All shipments are subject to Hub's standard terms and conditions, which are available on its website, www.hubgroup.com
* The rates set forth above replace any existing rates in these lanes starting from the effective date on the rate . Tendering loads to Hub on or after the effective date of the rate signifies your agreement that these new rates will apply for transportation in these lanes.

Official Minutes of
MARION COUNTY
BOARD OF COUNTY COMMISSIONERS

June 17, 2011

The Marion County Board of County Commissioners met in a workshop session in Commission Chambers at 9:40 a.m. on Friday June 17, 2011 at the Marion County Governmental Complex located in Ocala, Florida.

Upon roll call the following members were present: Chairman Stan McClain, District 3; Vice-Chairman Charlie Stone, District 5; Commissioner Mike Amsden, District 1; Commissioner Kathy Bryant, District 2; and Commissioner Carl Zalak, District 4. Also present were County Attorney Matthew G. Minter and County Administrator Lee Niblock.

The meeting opened with the Pledge of Allegiance to the Flag of our Country.

Garbage/Landfills/Litter Control/Solid Waste – Solid Waste Director Mike Sims presented a 1 page agenda as well as an 8 page handout entitled, "Board of County Commissioners Solid Waste Disposal Workshop" and a 12 page handout entitled, "Marion County BOCC Workshop – June 17, 2011" to follow along with the PowerPoint presentations.

(Ed. Note: BOCC is the acronym for Board of County Commissioners.)

Chairman McClain requested that Commissioner Stone, as liaison, provide the Board with an update in regard to the progress being made to resolve some of the solid waste issues facing Marion County.

Commissioner Stone addressed the importance, as a Board, to review and explore the options and alternatives regarding a long term solution for disposal of solid waste. He noted although there was some life left at the Baseline Landfill it was not a long term solution. Commissioner Stone stated one of the options being presented today was to become involved in a new landfill in Sumter County that would offer a solution for the next 50 years.

Mr. Sims provided a brief background on the issues Marion County faced regarding the disposal of solid waste, noting at the January 4, 2011 Board of County Commissioner (BCC) meeting, staff presented several viable options for consideration. He noted at that meeting Board direction was for staff to: 1) review maximizing the existing capacity at the Baseline Landfill; 2) continue to research the possibility of regional partnerships and 3) consider the possibility of a waste to energy option.

Mr. Sims referred to page 2 of the handout entitled, "Board of County Commissioners Solid Waste Disposal Workshop" and advised that disposal capacity at the Baseline Landfill, with the inclusion of the east side slope modifications and excavated soil, was approximately 11.5 years or until December 2021.

Mr. Sims addressed page 3, which provided a comparative overview of the tonnage of commercial and residential solid waste flowing into the Baseline Landfill from fiscal year (FY) 2007-08 through FY 2009-10 as well as the projected tonnage for FY 2010 through 2012. He stated commercial waste coming into the landfill would generate a tipping fee across the scale of $48 per ton ($42 per ton for franchise haulers) and the residential waste stream under the Marion County solid waste assessment was $87 per residential unit, per year. In response to Commissioner Bryant, Mr. Sims stated staff

Metal Conversion Technologies, LLC

1 East Porter Street, P.O. Box 1026, Cartersville, GA 30120, ph: 678-721-0022, fax: 678-721-0266

Lighting Resources, LLC

Battery Recycling Pricing Schedule

October 6, 2011

Mr. David Gillespie
1007 SW 16th Lane
Ocala, FL 34471
Ph: (909) 923-3132
Email: david.gillespie@lightingresourcesinc.com

Dear Mr. Gillespie:

Please find below our battery recycling pricing schedule.

Battery Type	Pricing ($/lb)
Nickel-Cadmium, Sealed Cells & Power-Packs	Pay $0.20
Nickel-Metal Hydride, Sealed Cells & Power Packs	Pay $0.80
Lithium-Ion, Cobaltate Technology, High Yield	Pay $0.75
Lithium-Ion, Cobaltate Technology, Low Yield	Pay $0.25
Lithium-Ion, Polymer	No Charge
Nickel-Cadmium, Wet, Aviation, Sintered & Fiber Plate	Pay $0.10
Lead Acid, including SSLA	Pay $0.05
Nickel-Zinc	No Charge
Nickel-Cadmium, wet, industrial	Charge $0.25
Lithium Technologies, Drill Rods	Charge $5.97
Lithium Technologies, Commercial (C, D, Power Packs)	Charge $4.29
Lithium Technologies, Consumer Sealed Cells (Button, AAA, AA)	Charge $3.72
Alkaline Sealed Cells, Zinc Air, Zinc Carbon	Charge $0.28
Excessive Contact Insulation & Wiring on Battery Packs	Charge $0.05
DOT Certified Haz-Mat Repackaging	Charge $0.13

Freight Terms: F.O.B., MCT, Cartersville, GA
Invoicing/Payment Terms: Net 45 Days from MCT's Material Receipt Date
MCT pricing subject to change based upon Metal Market Fluctuation.

Sincerely,

Steve Pledger – National Accounts Manager
steve@metalconversion.com

VEOLIA
ENVIRONMENTAL SERVICES

Date: 10/14/2011

Bonnie Bishop-Clark
LIGHTING RESOURCES LLC
1007 SW 16TH LANE

OCALA, FL 34471

Re: Quotation 140554

Thank you for allowing the Electronics Recycling Division of Veolia ES Technical Solutions, L.L.C. (Veolia ES) the opportunity to provide a price quotation for the below listed waste material(s). Veolia ES is the leading lighting and electronics recycling company in North America.

As you may be aware, over the past few years, federal, state and local regulations concerning spent lighting and electronic equipment have become increasingly complex, affecting a wide range of commercial and industrial businesses. Much of today's lighting and electronic equipment contains hazardous materials such as mercury, lead or PCBs.

Concerns over releases into the air and water are driving stricter disposal regulations. Federal, state and local laws may prohibit the disposal of these items in municipal solid waste. As a result, you may be faced with the challenging task of meeting these regulations in the most cost-effective manner. Managing this waste stream is not just the responsible thing to do; it is the only way to avoid potential legal action and regulatory fines.

By recycling with Veolia ES, we can offer you a unique combination of comprehensive environmental services that provide the best risk management and liability protection available, including: a national service network; advanced treatment and recycling technologies; financial strength and stability; environmental compliance; technical experience and expertise; and a proven track record delivering successful recycling programs.

We believe no other recycling company in North America can offer the same level of service and support!

The rates listed below are based on information provided by the customer and include all labels, shipping documents and certificates of recycling, disposal, or destruction. Processing occurs at a fully permitted Veolia ES approved processing facilities. Material(s) received will be placed in computerized inventory and processed in accordance with all current local, state and federal rules and regulations pertaining to each type of waste material(s) listed.

To accept this quote, please sign the last page, and the enclosed Agreement, and return via fax at (850) 878-3349.

Veolia ES Technical Solutions, L.L.C.
342 Marpan Lane, Tallahassee, FL 32305
Tel: 850 877 8299; Fax: 850 878 3349
www.veoliaes.com

VEOLIA
ENVIRONMENTAL SERVICES

DESCRIPTION	UNIT PRICE		CONTAINER MIN	VOLUME QTY
Energy and Security Surcharge				
13% Energy and Security Surcharge	$0.1300	Percent		
Mercury Containing Articles & Apparatus				
Recycle - Phosphorus Powder	$225.0000	Drum	55 DM	
Transportation Charges				
Transportation	$50.0000	Drum	55 DM	

Veolia ES Technical Solutions, L.L.C.
342 Marpan Lane, Tallahassee, FL 32305
Tel: 850 877 8299; Fax: 850 878 3349
www.veoliaes.com

VEOLIA
ENVIRONMENTAL SERVICES

Additional Services

Veolia ES Technical Solutions, L.L.C. (Veolia ES), through its Electronics Recycling Division, provides a complete range of services for customers recycling lighting and electronic waste that contain toxic and hazardous materials and waste. For information on any of the services listed below, contact Veolia ES toll-free at 1-866-877-8299 or visit Veolia ES on the web at www.veoliaes.com. Veolia ES recycles the following items:

* Fluorescent lamps and ballast
* Electronic equipment
* Computer equipment
* Batteries

==========

Special Instructions / Notes

The Terms and Conditions described in the enclosed ENVIRONMENTAL SERVICES AGREEMENT ("Agreement") shall govern any Services performed by Veolia ES. To accept this quotation, please sign below as well as the

$50 Trans fee includes manifest fee. There are no other Trans fees as this is a flat rate.

==========

Prepared by: Linda Dunwoody Date: 10/14/2011

Authorized Representative: Linda T. Dunwoody, Operations Manager

Signature: Linda Dunwoody

Accepted By: _____ Date: _____

Title: _____

Print Name: _____

Purchase Order #: _____

Quote Number 140554

Veolia ES Technical Solutions, L.L.C.
342 Marpan Lane, Tallahassee, FL 32305
Tel: 850 877 8299; Fax: 850 878 3349
www.veoliaes.com

WASTE MANAGEMENT
LampTracker.

WM LampTracker Inc.

October 14, 2011

CUSTOMER PICK UP ADDRESS:

Lighting Resources
1007 SW 16th Lane
Ocala, FL 34471
Attn: Bonnie Bishop-Clark
email: bonnie@lightingresourcesinc.com
Phone: 904-881-2229 Fax: 352-509-3012

CUSTOMER INVOICE ADDRESS (if different from pick up):

Lighting Resources
1007 SW 16th Lane
Ocala, FL 34471
Attn: Bonnie Bishop-Clark
email: bonnie@lightingresourcesinc.com
Phone: 904-881-2229 Fax: 352-509-3012

Job Scope: Waste LampTracker Inc. (WMLT) is proposing to manage universal Waste, commodities and materials for recycling as part of the closure fund at the Lighting Resources Inc facility in Ocala Florida. All materials are managed in accordance with applicable local, state and federal laws, rules and regulations.

FOB: Customer pays all freight charges. TERMS: NET 30 DAYS

MATERIALS GROUP PRICING	PRICE	UNIT	COMMENTS
Lamp Group A (see detailed description below)	$1.05	LB	Charge Item
Lamp Group B (see detailed description below)	$3.05	LB	Charge Item
Phosphate Powder (mercury contaminated)	$1250.00	Cubic Yard	3.5 drums per CY
Mercury Devices/Debris (intact non-leaking)	$2500.00	Cubic Yard	3.5 drums per CY

MATERIALS GROUP DESCRIPTION

Lamp Group A – Includes: all NON-COATED FLUORESCENT straight lamps/circular lamps/U-Bent lamps/UV lamps/suntan lamps/Fluorescent crushed or broken lamps. This group also includes all LED lamp types.
Lamp Group B – Includes: all HID lamps/low pressure sodium/high pressure sodium/metal halide bulbs/shielded or coated lamps/power groove lamps/Arc tube lamps/Ignitron lamps/projection lamps/mercury lamps/ultraviolet/black light lamps/Germicidal/NEON/Compact Fluorescent (CFL)/Incandescent lamps/spot lamps/PAR/Quarts/Halogen. This pricing also includes any of the above lamps in a broken form.

ADDITIONAL SERVICES	PRICE	UNIT	COMMENTS
Transportation Group A (Full Truck Load)	$ quote	Per Shipment	Charge Item
Transportation Group B (Less Than Truckload)	$ quote	Per Pallet	Charge Item
Transportation Group C (Special handling services)	$150.00	Per Hour	One Hour Minimum
Transportation Group D (Hazardous Waste transport)	$ quote	Per Drum	Charge Item
Transportation Group E (Packaging Materials)	$ quote	Per Pallet	Charge Item
Transportation Group B (Customer Delivery)	$No Charge	Per Pallet	Schedule dock Time
Certificate of Recycling	$0.00	Load	one per shipment
Manifest/Bill Of Lading	$15.00	Each	
Sorting/Repackaging Labor	$150.00	per hour/ per person	One Hour Minimum

CONTAINER SERVICES	PRICE	UNIT	COMMENTS
4 foot box (holds 25 T12, 56 T8, 125 T5)	$ quote	each	Charge Item
8 foot box (hold 25 T12, 56 T8)	$ quote	each	Charge Item
55-gallon steel drum	$quote	each	Charge Item

Destination Facility: WM LampTracker Inc. 109 Twenty Nine Ct. Williamston, SC 29697
Phone: 888-537-4874
Subsidiary of Waste Management, Inc. www.lamptracker.com
1 of 5

WASTE MANAGEMENT
LampTracker
WM LampTracker Inc.

ADDITIONAL TERMS AND CONDITIONS

Packaging:

- Material should be packaged in accordance with all Department of Transportation regulations for TSCA/Universal Waste/Hazardous waste requirements and must be on pallets, in containers (no exposed materials), and in such a manner as to allow loading and unloading using a motorized forklift. Materials should be sorted into the following categories:
    - Lamps: all lamps must be sorted by the type of lamp (sorting fee applies to mixed lamp combinations).
    - Batteries: all batteries must be sorted by the battery type (sorting fee applies to mixed battery combinations).
    - Labeling: Universal Waste Lamps, Batteries, and Mercury Containing Devices must have appropriate labels affixed to each container. PCB-Ballast must have a TSCA label affixed to the container and an out-of-Service date assigned on each container.
    - All pallets are to be shrink-wrapped to stabilize them for shipment.
    - If not packaged/sorted according to specifications, sorting labor charges may apply.
    - Customer is responsible for all packaging materials unless otherwise noted.

ADDITIONAL TERMS AND CONDITIONS CONTINUED

Transportation:

- If customer is providing transportation, customer will need to contact the WM Tracker destination facility prior to sending material; this is required to schedule dock time for unloading, processing, and documentation of the material.

Other Items:

- This quote will be valid through December 31, 2012. All additions, subtractions, or changes to the quote must be done with the written approval of WM LampTracker Inc.
- WMLT reserves the right to adjust the quoted price upon receipt of material, reflecting any increase or decrease in the quantity, quality, or conditions of the received material(s).
- Customer agrees to pay all fees associated with the collection of past due accounts.
- Market pricing to be reviewed and adjusted on a quarterly basis based on acceptance date unless otherwise noted.
- Customer warrants that no liquid or unacceptable wastes will be shipped to WM LampTracker Inc.
- This document contains confidential information and cannot be duplicated or transmitted to other parties without the written approval of WM LampTracker Inc.
- **All material will be processed in the United States. No export of unprocessed end-of-life material.**

WE ARE PLEASED TO QUOTE THE ABOVE PRICES. THANK YOU FOR YOUR BUSINESS.

Subject to WM LampTracker Inc. terms and conditions listed on pages 4 and 5 of this quote.

Customer Authorized Signature / Accepted By: _____

Date: _____

WASTE MANAGEMENT
LampTracker

WM LampTracker Inc.

WM LampTracker Bulk Program Recycling Program TERMS AND CONDITIONS

These Terms and Conditions ("Terms") govern (a) your use WM LampTracker ("WMLT") bulk recycling programs (the "Recycling Program"); and (b) the relationship between WMLT and the user of the Recycling Program ("You" or "Customer"). If you have any questions regarding these Terms, consult WMLT Web Site (currently: www.wmlamptracker.com) or call 1-888-537-4874.

USE OF THE RECYCLING PROGRAM CONSTITUTES ACCEPTANCE OF THESE TERMS AND CONDITIONS.

1. SERVICE REQUIREMENTS. Service arrangements will be agreed by the parties. Changes in the frequency of collection service, schedule, number, capacity and/or type of equipment may be agreed to in writing or by the actions and practices of the parties.

2. LIMIT ON PROGRAM AVAILABILITY. The Recycling Programs are available to Customers located in the 50 United States and Puerto Rico.

3. NON-CONFORMING WASTE. Customer represents and warrants that it shall provide only acceptable recycling materials as indicated on the Acceptable Universal Waste sheet (the "Acceptable Waste"). A detailed list of the Acceptable Waste also may be obtained from WMLT. Material will be considered nonconforming if it has constituents, characteristics, components or properties not included within the definition of Acceptable Waste, and Acceptable Waste specifically excludes, and Customer agrees not to deposit or permit the deposit for collection of, any waste tires, radioactive, volatile, flammable, explosive, biomedical, infectious, biohazardous, regulated medical waste, toxic substance or material, as defined by, characterized or listed under applicable federal, state, or local laws or regulations, or other waste not approved in writing by WMLT (collectively, "Non-Conforming Waste"). Title to and liability for Non-Conforming Waste shall remain with Customer at all times. Title to Acceptable Waste shall vest in WMLT at time of pick-up or delivery. If WMLT determines that there is any Non-Conforming Waste, WMLT may, at its sole discretion, and at Customer's sole cost and expense: (a) return the Non-Conforming Waste to Customer; or (b) process the Non-Conforming Waste and Customer shall pay for any and all costs associated with processing the Non-Conforming Waste.

4. PACKAGING. Customer shall properly pack, seal and label material in accordance with the WMLT Bulk Packaging Instructions which can be obtained on the WMLT Web Site or by calling WMLT. Any packaging or repackaging of material to meet DOT or other regulations will be invoiced at the hourly rate indicated on the WMLT price quotation.

5. TRANSPORTATION. Customer shall have lamps packaged/palletized and at their loading dock prior to WMLT (or 3rd party) truck's arrival. Customer shall be available to assist the driver with loading. Customer may be charged a trip cancellation fee in any instance where WMLT is scheduled to pick-up and the pick-up is cancelled, or rescheduled with less than 72 hours advance notice, or material is unavailable for pickup. One hour of loading/unloading time is allocated for each stop, and any additional time will be charged at the hourly rate indicated on the WMLT price quotation.

6. CHARGES FOR FAILURE TO COMPLY WITH TERMS AND INSTRUCTIONS; NON-CONFORMING WASTE; CHANGED CONDITIONS; AND ADDITIONAL SERVICES. WMLT reserves the right to bill additional amounts for any of the following: (a) any container exceeding its specified maximum weight; (b) costs associated with handling any Non Conforming Waste; (c) shipping materials in the wrong container or mixing materials in a container; (d) any costs or expenses incurred by WMLT other than the usual and ordinary costs of WMLT in the performance of the Recycling Program; or (e) any costs related to changes in applicable law.

7. PAYMENT TERMS. Payments are due within 30 days of the invoice date. WMLT reserves the right to charge a late fee no greater than that allowed by law on balances not paid within thirty (30) days of the date of the invoice. Prices are subject to change at any time upon notice.

8. WARRANTY. WMLT warrants that it will handle, manage, treat, process and dispose of the Acceptable Waste in a safe and workmanlike manner and in full compliance with all valid and applicable statutes, ordinances, orders, rules and regulations of the federal, state and local governments in whose jurisdictions such Recycling Program is performed under these Terms. Other than as expressly warranted herein, WMLT disclaims all warranties, express or implied, including, but not limited to, implied warranties of merchantability and fitness for a particular purpose.

9. INDEMNITY. WMLT will indemnify, defend and save Customer harmless from and against any and all liability which Customer may be responsible for or pay out as a result of bodily injuries (including death), property damage, or any violation or alleged violation of law, to the extent caused by any negligent act, negligent omission or willful misconduct of WMLT or its employees, which occurs (1) during the collection or transportation of Customer's Acceptable Waste, or (2) as a result of the disposal of Customer's Acceptable Waste in a facility owned by a subsidiary of Waste Management, Inc., provided that WMLT's indemnification obligations stated herein will not apply to any occurrences involving or related to Non-Conforming Waste. Customer agrees to indemnify, defend and save WMLT harmless from and against any and all liability which WMLT may be responsible for or pay out as a result of bodily injuries (including death), property damage, or any violation or alleged violation of law to the extent caused by Customer's breach of these Terms or by any negligent act, negligent omission or willful misconduct of the Customer or its employees, agents or contractors in the performance of these Terms or Customer's use, operation or possession of any equipment furnished by WMLT, or any occurrences related to Non-Conforming Waste. Neither party shall be liable to the other

WASTE MANAGEMENT
LampTracker

WM LampTracker Inc.

for special, consequential incidental or punitive damages arising out of the performance of the Recycling Program. This Section will survive any termination of the parties' relationship.

10. LIMITATION ON LIABILITY. Other than the obligations of WMLT set forth in these Terms: (a) in no event shall WMLT be liable or responsible for any matter beyond WMLT's reasonable commercial control; and (b) in no event shall WMLT be liable to Customer for any amount in excess of the amount received by WMLT for the Recycling Program.

11. GOVERNING LAW AND VENUE. These Terms will be interpreted in accordance with the laws of the State of Texas, without regard to its choice of law provisions, as though all acts and omissions occurred in the State of Texas. All disputes arising under these Terms will be brought in a state or federal court in Houston, Texas, and, in such instance, Customer: (a) waives any objection which it might have now or hereafter to the exclusive venue of any such litigation, action or proceeding, (b) irrevocably submits to the exclusive jurisdiction of any such court, (c) waives any claim or defense of inconvenient forum; and (d) waives any right to trial by jury of any claim or cause of action by or against WMLT.

12. FORCE MAJEURE. WMLT shall not be in default for its failure to perform or delay in performance caused by events or significant threats of events beyond its reasonable control, whether or not foreseeable, including, but not limited to, strikes, labor trouble, riots, imposition of laws or governmental orders, fires, acts of war or terrorism, acts of God, and the inability to obtain equipment, acts or omissions of shippers or carriers, and WMLT shall be excused from performance during the occurrence of such events.

13. ENTIRE AGREEMENT; CONSTRUCTION. These Terms constitute your entire agreement with WMLT with respect to the Recycling Program superseding all prior communications, agreements or correspondence between the parties or their representatives for these Recycling Program; provided, however, obligations which apply to the Packing Instructions or on the Web Site are hereby incorporated herein. If any provision in these Terms is determined to be illegal, invalid or unenforceable, the remainder of these Terms will nonetheless survive and govern the rights and obligations of the parties hereto. No provision of the Terms will be deemed waived, amended, or modified by either party unless such waiver, amendment, or modification is in writing signed by the party against whom enforcement is sought. Any additional or different terms or conditions contained in any document furnished by Customer are hereby objected to and rejected by WMLT. No representation or statement made by any employee, agent, or representative of WMLT shall be binding on WMLT to the extent such representation or statement differs from these Terms.

WASTE MANAGMENT - EMELLE LANDFILL PRICING (EMELLE, ALABAMA)

Thomas, Pamela

From: Sweeney, Jennifer [JSweene1@wm.com]
Sent: Tuesday, September 27, 2011 3:09 PM
To: Thomas, Pamela
Cc: Reynolds, Susan
Subject: FW: Shaw env. needs approximate pricing this afternoon.

Importance: High

Budgetary pricing for you.... all prices pending profile approval.

Disposal
PCB ballasts per 55 gallon drum:
$155 per drum disposal, tax, and Env fee

liquids for stabilization
$215 per drum disposal, tax, and Env fee

Rags for Macro-encapsulation
$280 per drum disposal, tax, and Env fee

Approval fees
$170 per profile ADEM fee
$50 per profile WM approval fee

Transportation (55 gallon drums)
$65 per drum transportation (includes current fuel)
3 drum minimum transportation fee
$150 stop fee per pick-up

Thanks,

Jennifer Sweeney, CHMM
Waste Management - Industrial Sales
Phone 904-588-3081
Fax 866-844-1560
TSR/Susan Reynolds 205-652-8166
E-mail jsweene1@wm.com
www.wmdisposal.com

Did you know that.... Waste Management's 100 landfill gas to energy projects create enough energy to replace nearly seven million barrels of oil per year.

From: Reynolds, Susan
Sent: Tuesday, September 27, 2011 11:12 AM
To: Sweeney, Jennifer
Subject: Shaw env. needs approximate pricing this afternoon.
Importance: High

By this afternoon, if possible, she just needs a ball park price.

Shaw Environmental
Pam Thomas
630-762-3323
Pamela.thomas@shawgrp.com

Susan Reynolds
Waste Management
Industrial Technical Service Representative
36964 Alabama Hwy 17 Emelle, AL 35459
1-205-652-8166-Office
1-866-844-1560-Fax
smreynol@wm.com

Visit www.wmsolutions.com for additional information.
Visit www.wmlamptracker.com for Universal Waste Recycling.
Waste Management's landfills provide over 17,000 acres of protected land for wildlife habitats and 15 are certified by the Wildlife Habitat Council.

Waste Management recycles enough paper every year to save 41 million trees. Please recycle any printed emails.

Programs
Waste Home
Petroleum Storage Systems
Solid and Hazardous Waste
Waste Cleanup

Information
Division & Bureau Contacts
Data Reports
DEP Public Notices
Division Public Notices
Forms
News
Publications and Reports
les

Navigation
Agency Site Map
Division Site Map

Annual Adjustment of Cost Estimates

Owners or operators of facilities regulated by the Solid Waste Financial Assurance office shall annually adjust their facility closure cost estimates for inflation and submit updated information to the Department. Outlined below are Rule 62-701.630(4), Florida Administrative Code (F.A.C.), requirements for submission of closure cost estimates.

Form 62-701.900(28) is used to prepare and submit closure cost estimates. Contact your permitting office for assistance with this form.
Annual cost estimate adjustments may be made either by recalculating the maximum cost of closure in current dollars or by using the current year inflation factor.
For owners or operators using an escrow account to demonstrate financial assurance, cost estimates must be submitted between July 1 and September 1 of each year.
For owners or operators using an alternate financial mechanism to demonstrate financial assurance, cost estimates must be submitted between January 1 and March 1 of each year.
Please submit Form 62-701.900(28) to the appropriate permitting office with a copy to:

Solid Waste Financial Coordinator
Department of Environmental Protection
2600 Blair Stone Road MS 4565
Tallahassee, Florida 32399-2400
(850) 245-8732 FAX (850) 245-8811

Calculation of the Inflation Factor

The annual inflation factor is derived from the most recent Implicit Price Deflator for Gross National Product published by the U.S. Department of Commerce in its Survey of Current Business, pursuant to Rule 62-701.630 (4)(a)(2), F.A.C.
To calculate the current inflation factor, divide the latest published annual Deflator by the Deflator for the previous year.
Implicit Price Deflator data is published by the U.S. Department of Commerce, Bureau of Economic Analysis on their website, http://www.bea.gov .
The data necessary to calculate the inflation factor is released by the U.S. Department of Commerce in April. Therefore, it is appropriate to use the previous year's factor when inflation adjusting cost estimates due between January 1 and March 1.

Current Year Inflation Factors:

1.010	for estimates due between January 1 and March 1, 2012
1.010	for estimates due between July 1 and September 1, 2011

Recent Inflation Factors:

Last Approved Cost Estimate (Year)		Select Appropriate Inflation Factor			New Cost Estimate (Year)
		Estimate due 1/1 - 3/1	Estimate due 7/1 - 9/1		
2005	x	1.020	1.030	=	2006
2006	x	1.030	1.030	=	2007
2007	x	1.030	1.025	=	2008
2008	x	1.025	1.020	=	2009

Highlights
SWFA Main Page
Cost Estimates
Facility Lists:
Solid Waste Management Facilities
Used Oil Processing Facilities
Forms
Provider Companies
Rules & Related Laws
Workshop

2009	x	1.020	1.010	=	2010
2010	x	1.010	1.010	=	2011
2011	x	1.010	Available in May '12	=	2012

Last updated: November 03, 201

Bureau of Solid & Hazardous Waste #850-245-8707 MS #4550

Division of Waste Management #850-245-8705 MS #4500
2600 Blair Stone Road, Tallahassee, Florida 32399-2400

Questions & Comments Form

DEP Home | About DEP | Contact Us | Search | Site Map

Appendix G

Financial

G1 FL Closure Schedule A

G2 Closure Fund Update 2021

G3 FL Trust dated 4-16-2012

G4 WM Legal - JP Morgan Resignation

G5 FL Closure from Chase to FIB 2015

SCHEDULE A
Revised 6/30/21

This Agreement demonstrates financial assurance for the following cost estimate for the following facility:

EPA/DEP I.D. No: FLR000070565

NAME: Lighting Resources, LLC

ADDRESS: 1007 SW 16TH Lane
Ocala, FL 34471

COST ESTIMATES:

Florida Closure Fund

152,540.58	Amount in FIB bank 5/31/2021
5,335.48	Increase
157,876.06	Total Amount Closure Fund 7/20/21

Susan Richard

From: Susan Richard
Sent: Wednesday, June 30, 2021 2:40 PM
To: Echevarria, Edgar
Cc: Buff Fritz; Accounts Payable; Heather Arambel
Subject: FL Closure Fund Calculations 2021
Attachments: 2021 PDF page.pdf

Good morning Edgar,
We have calculated our required balance for the Closure fund per the attached document.

The amount due will be forwarded to First Interstate Bank prior to the due date of July 20, 2021.

Hope all is well with you and family.

Susan

Susan Richard
Lighting Resources, LLC
805 East Francis Street
Ontario, CA 91761
o. 909-923-7252
d. 909-923-3132
c. 949-300-7559
usan.richard@lightingresourcesinc.com

Florida Closure Fund

149,437.02	Required total prior year
1.05647	Inflation Factor per Department of Commerce (BLS May)
157,876.06	Amount due by July 20, 2021
152,540.58	Amount in FIB bank 4/30/2021
5,335.48	Balance due 7/20/2021
5,335.48	Check forwarded 7/10/2021

Inflation factor: May 2021/May 2020

263.61
249.52
1.05647

CPI-Urban Wage Earners and Clerical Workers (Current Series)
Original Data Value

Series Id: CWUR0000SA0
Not Seasonally Adjusted
Series Title: All items in U.S. city average, urban wage earners and clerical workers, not seasonally
Area: U.S. city average
Item: All items
Base Period: 1982-84=100
Years: 2008 to 2018

Year	Jan	Feb	Mar	Apr	May			
2008	206.744	207.254	209.147	210.698	212.788			
2009	205.700	206.708	207.218	207.925	208.774			
2010	212.568	212.544	213.525	213.958	214.124			
2011	216.400	217.535	220.024	221.743	222.954			
2012	223.216	224.317	226.304	227.012	226.600			
2013	226.520	228.677	229.323	228.949	229.399			
2014	230.040	230.871	232.560	233.443	234.216			
2015	228.294	229.421	231.055	231.520	232.908			
2016	231.061	230.972	232.209	233.438	234.436			
2017	236.854	237.477	237.656	238.432	238.609	2021	2020	2019
2018	241.919	242.988	243.463	244.607	245.770	263.612	249.521	249.871
2019	245.133	246.218	247.768	249.332	249.871	249.521	249.871	245.770
2020	251.361	251.935	251.375	249.515	249.521	105.647%	99.860%	101.669%
2021	255.296	256.843	258.935	261.237	263.612			

First Interstate Wealth Management

xxxx9560 Lighting Resources, LLC Trust FL
May 1, 2021 - May 31, 2021

Overview of Your Account - xxxx9560 Lighting Resources, LLC Trust FL

Investment Objective: Capital Preservation

Activity Summary

	This Period ($)	Year to Date ($)
Beginning Market Value	152,537.20	152,526.51
Cash and security transfers	0.00	0.00
Contributions	0.00	0.00
Income & Capital Gain Distributions	4.40	11.99
Withdrawals and fees	0.00	0.00
Change in Account Value	-1.02	2.08
Market Value on May 31, 2021	$152,540.58	$152,540.58

Income Earned

	This Period ($)	Year to Date ($)
Taxable Income	4.40	11.99
Tax-Exempt Income	0.00	0.00
Tax-Deferred Income	0.00	0.00
Total Income Earned	$4.40	$11.99
Total Short Term Realized Capital Gain/Loss	$0.00	$0.00
Total Long Term Realized Capital Gain/Loss	$0.00	$0.00
Total Realized Capital Gain/Loss	$0.00	$0.00

Asset Allocation on May 31, 2021

	Market Value ($)	Percent
Cash & Cash Equivalents	152,540.58	100%
Total of Your Account	$152,540.58	100%

Your Monthly Portfolio Statement

November 1, 2021 - November 30, 2021

Lighting Resources, LLC Trust FL

First Interstate Wealth Management

401 North 31st Street
P. O. Box 30918
Billings, MT 59101-0918

The end is near...the end of 2021, that is. Connect with your Wealth Advisor or Trust Specialist to discuss year-end planning. Happy holidays!

Your Wealth Management Team Contacts
Trust Specialist: Heather Arambel 1 (307) 686-4718 heather.arambel@fib.com

Accounts Included In This Statement
xxxx9560 Lighting Resources, LLC Trust FL

Table of Contents

Overview of Your Account....3
Your Asset Summary....4
Portfolio Holdings....5
Your Transaction Detail....6
Information....7

POSTED
12/16/21

First Interstate Wealth Management

xxxx9560 Lighting Resources, LLC Trust FL
November 1, 2021 - November 30, 2021

Overview of Your Account - xxxx9560 Lighting Resources, LLC Trust FL

Investment Objective: Capital Preservation

Activity Summary

	This Period ($)	Year to Date ($)
Beginning Market Value	157,892.45	152,526.51
Cash and security transfers	0.00	0.00
Contributions	0.00	5,335.48
Income & Capital Gain Distributions	3.35	31.76
Withdrawals and fees	0.00	0.00
Change in Account Value	-0.11	1.94
Market Value on Nov 30, 2021	**$157,895.69**	**$157,895.69**

Income Earned

	This Period ($)	Year to Date ($)
Taxable Income	3.35	31.76
Tax-Exempt Income	0.00	0.00
Tax-Deferred Income	0.00	0.00
Total Income Earned	**$3.35**	**$31.76**
Total Short Term Realized Capital Gain/Loss	**$0.00**	**$0.00**
Total Long Term Realized Capital Gain/Loss	**$0.00**	**$0.00**
Total Realized Capital Gain/Loss	**$0.00**	**$0.00**

Asset Allocation on November 30, 2021

	Market Value ($)	Percent
Cash & Cash Equivalents	157,895.69	100%
Total of Your Account	**$157,895.69**	**100%**

2020668-00364285-00036 of 00040-c01-m2-1241-20668

Print Form

Lighting Resources, LLC
DEP Permit Application_Revision No. [1]
April 2012

DEP Form # 62-730.900(4)(e)
Form Title HW Facility Trust Fund
Effective Date January 5, 1995
DEP Application No.

STATE OF FLORIDA
HAZARDOUS WASTE FACILITY TRUST FUND AGREEMENT
TO DEMONSTRATE FINANCIAL ASSURANCE
FOR

☑ Closure ☐ Postclosure ☐ Corrective Action
Check Appropriate Box(es)

TRUST AGREEMENT, the "Agreement", entered into as of April 16 2012 (Date)

by and between Lighting Resources, LLC (Name of the Owner or Operator),

a California (Name of state) Limited Liability Company (Insert "corporation," "partnership," "association," or "proprietorship"), the "Grantor,"

and J P Morgan Chase Bank, National Association
420 W Van Buren, Mail Code IL 1-0113; Chicago, IL 60606
(Name and Address of Corporate Trustee)

a national bank. (Insert "incorporated in the state of_____" or "a national bank"), the "Trustee."

WHEREAS, the Florida Department of Environmental Protection, "FDEP", an agency of the state of Florida, has established certain regulations applicable to the Grantor, requiring that an owner or operator of a hazardous waste management facility shall provide assurance that funds will be available when needed for "Required Action" of the facility,

WHEREAS, the Grantor has elected to establish a trust to provide all or part of such financial assurance for the facilities identified herein,

WHEREAS, the Grantor, acting through its duly authorized officers, has selected the Trustee to be the trustee under this agreement, and the Trustee is willing to act as trustee,

NOW, THEREFORE, the Grantor and the Trustee agree as follows:

Section 1. Definitions. As used in this Agreement:

(a) The term "Grantor" means the owner or operator who enters into this Agreement and any successors or assigns of the Grantor.

(b) The term "Trustee" means the Trustee who enters into this Agreement and any successor Trustee.

(c) The term "FDEP" means the Florida Department of Environmental Protection, an Agency of the state of Florida or any successor thereof.

(d) The term "Required Action," as used in this document means closure, post-closure care, or corrective action, or any combination of these, which is checked above.

Section 2. Identification of Facilities and Cost Estimates. This Agreement pertains to the facilities and cost estimates identified on attached Schedule A
On Schedule A, for each facility list the EPA/DEP Identification Number, name, address, and the current "Required Action" cost estimates, or portions thereof, for which financial assurance is demonstrated by this Agreement.

Section 3. Establishment of Fund. The Grantor and the Trustee hereby establish a trust fund, the "Fund," for the benefit of the FDEP. The Grantor and the Trustee intend that no third party have access to the Fund except as herein provided. The Fund is established initially as consisting of the property, which is acceptable to the Trustee, described in Schedule B attached hereto. Such property and any other property subsequently transferred to the Trustee is referred to as the Fund, together with all earnings and profits thereon, less any payments or distributions made by the Trustee pursuant to this Agreement. The Fund shall be held by the

Trustee, IN TRUST, as hereinafter provided. The Trustee shall not be responsible nor shall it undertake any responsibility for the amount or adequacy of, nor any duty to collect from the Grantor, any payments necessary to discharge any liabilities of the Grantor established by the FDEP.

Section 4. Payment for Closure, Post-Closure Care, and Corrective Action . The Trustee shall make payments from the Fund as the FDEP Secretary shall direct, in writing, to provide for the payment of the costs of "Required Action" of the facilities covered by this Agreement. The Trustee shall reimburse the Grantor or other persons as specified by the FDEP Secretary from the Fund for "Required Action" expenditures in such amounts as the FDEP Secretary shall direct in writing. In addition, the Trustee shall refund to the Grantor such amounts as the FDEP Secretary specifies in writing. Upon refund, such funds shall no longer constitute part of the Fund as defined herein.

Section 5. Payments Comprising the Fund. Payments made to the Trustee for the Fund shall consist of cash or securities acceptable to the Trustee.

Section 6. Trustee Management. The Trustee shall invest and reinvest the principal and income of the Fund and keep the Fund invested as a single fund, without distinction between principal and income, in accordance with general investment policies and guidelines which the grantor may communicate in writing to the Trustee from time to time, subject, however, to the provisions of this Section. In investing, reinvesting, exchanging, selling, and managing the Fund, the Trustee shall discharge his duties with respect to the trust fund solely in the interest of the beneficiary and with the care, skill, prudence, and diligence under the circumstances then prevailing which persons of prudence, acting in a like capacity and familiar with such matters, would use in the conduct of an enterprise of a like character and with like aims; except that:

(a) Securities or other obligations of the Grantor, or any other owner or operator of the facilities, or any of their affiliates as defined in the Investment Company Act of 1940, as amended, 15 U.S.C. 80a-2.(a), shall not be acquired or held, unless they are securities or other obligations of the federal or a state government;

(b) The Trustee is authorized to invest the Fund in time or demand deposits of the Trustee, to the extent insured by an agency of the federal or a state government; and

(c) The Trustee is authorized to hold cash awaiting investment or distribution uninvested for a reasonable time and without liability for the payment of interest thereon.

Section 7. Commingling and Investment. The Trustee is expressly authorized in its discretion:

(a) To transfer from time to time any or all of the assets of the Fund to any common, commingled, or collective trust fund created by the Trustee in which the Fund is eligible to participate, subject to all of the provisions thereof, to be commingled with the assets of other trusts participating therein; and

(b) To purchase shares in any investment company registered under the Investment Company Act of 1940, 15 U.S.C. 80a-1 et seq., including one which may be created, managed, underwritten, or to which investment advice is rendered or the shares of which are sold by the Trustee. The Trustee may vote such shares in its discretion.

Section 8. Express Powers of Trustee. Without in any way limiting the powers and discretions conferred upon the Trustee by the other provisions of this Agreement or by law, the Trustee is expressly authorized and empowered:

(a) To sell, exchange, convey, transfer, or otherwise dispose of any property held by it, by public or private sale. No person dealing with the Trustee shall be bound to see to the application of the purchase money or to inquire into the validity or expediency of any such sale or other disposition;

(b) To make, execute, acknowledge, and deliver any and all documents of transfer and conveyance and any and all other instruments that may be necessary or appropriate to carry out the powers herein granted;

(c) To register any securities held in the Fund in its own name or in the name of a nominee and to hold any security in bearer form or in book entry, or to combine certificates representing such securities with certificates of the same issue held by the Trustee in other fiduciary capacities, or to deposit or arrange for the deposit of such securities in a qualified central depository even though, when so deposited, such securities may be merged and held in bulk in the name of the nominee of such depository with other securities deposited therein by another person, or to deposit or arrange for the deposit of any securities issued by the United States Government, or any agency or instrumentality thereof, with a Federal Reserve bank, but the books and records of the Trustee shall at all times show that all such securities are part of the Fund;

(d) To deposit any cash in the Fund in interest-bearing accounts maintained or savings certificates issued by the Trustee, in its separate corporate capacity, or in any other banking institution affiliated with the Trustee, to the extent insured by an agency of the federal or a state government; and

(e) To compromise or otherwise adjust all claims in favor of or against the Fund.

Section 9. Taxes and Expenses. All taxes of any kind that may be assessed or levied against or in respect of the Fund and all brokerage commissions incurred by the Fund shall be paid from the Fund. All other expenses incurred by the Trustee in connection with the administration of this Trust, including fees for legal services rendered to the Trustee, the compensation of the Trustee to the extent not paid directly by the Grantor, and all other proper charges and disbursements of the Trustee shall be paid from the Fund.

Section 10. Annual Valuation. The Trustee shall annually, at least 30 days prior to the anniversary date of establishment of the Fund, furnish to the Grantor and to the Secretary of the FDEP a statement confirming the value of the Trust. Any securities in the Fund shall be valued at market value as of no more than 60 days prior to the anniversary date of establishment of the fund. The failure of the Grantor to object in writing to the Trustee within 90 days after the statement has been furnished to the Grantor and the FDEP Secretary shall constitute a conclusively binding assent by the Grantor, barring the Grantor from asserting any claim or liability against the Trustee with respect to matters disclosed in the statement.

Section 11. Advice of Counsel. The Trustee may from time to time consult with counsel, who may be counsel to the Grantor, with respect to any question arising as to the construction of this Agreement or any action to be taken hereunder. The Trustee shall be fully protected, to the extent permitted by law, in acting upon the advice of counsel.

Section 12. Trustee Compensation. The Trustee shall be entitled to reasonable compensation for its services as agreed upon in writing from time to time with the Grantor.

Section 13. Successor Trustee. The Trustee may resign or the Grantor may replace the Trustee, but such resignation or replacement shall not be effective until the Grantor has appointed a successor Trustee and this successor accepts the appointment. The successor trustee shall have the same powers and duties as those conferred upon the Trustee hereunder. Upon the successor trustee's acceptance of the appointment, the Trustee shall assign, transfer, and pay over to the successor trustee the funds and properties then constituting the Fund. If for any reason the Grantor cannot or does not act in the event of the resignation of the Trustee, the Trustee may apply to a court of competent jurisdiction for the appointment of a successor trustee or for instructions. The successor trustee shall specify the date on which it assumes administration of the trust in a writing sent to the Grantor, FDEP Secretary, and the present Trustee by certified mail 10 days before such change becomes effective. Any expenses incurred by the Trustee as a result of any of the acts contemplated by this Section shall be paid as provided in Section 9.

Section 14. Instructions to the Trustee. All orders, requests, and instructions by the Grantor to the Trustee shall be in writing, signed by such persons as are designated in the attached Exhibit A or such other designees as the Grantor may designate by amendment to Exhibit A. The Trustee shall be fully protected in acting without inquiry in accordance with the Grantor's orders, requests, and instructions. All orders, requests, and instructions by the FDEP Secretary to the Trustee shall be in writing, signed by the FDEP Secretary, or the designee, and the

Trustee shall act and shall be fully protected in acting in accordance with such orders, requests, and instructions. The Trustee shall have the right to assume, in the absence of written notice to the contrary, that no event constituting a change or a termination of the authority of any person to act on behalf of the Grantor or the FDEP hereunder has occurred. The Trustee shall have no duty to act in the absence of such orders, requests, and instructions from the Grantor and/or the FDEP, except as provided for herein.

Section 15. Notice of Nonpayment. The Trustee shall notify the Grantor and the FDEP Secretary, by certified mail within 10 days following the expiration of the 30-day period after the anniversary of the establishment of the Trust, if no payment is received from the Grantor during that period. After the pay-in period is completed, the Trustee shall not be required to send a notice of nonpayment.

Section 16. Amendment of Agreement. This Agreement may be amended by an instrument in writing executed by the Grantor, the Trustee, and the FDEP Secretary, or by the Trustee and the FDEP Secretary if the Grantor ceases to exist.

Section 17. Irrevocability and Termination. Subject to the right of the parties to amend this Agreement as provided in Section 16, this Trust shall be irrevocable and shall continue until terminated at the written agreement of the Grantor, the Trustee, and the FDEP Secretary, or by the Trustee and the FDEP Secretary, if the Grantor ceases to exist. Upon termination of the Trust, all remaining trust property, less final trust administration expenses, shall be delivered to the Grantor.

Section 18. Immunity and Indemnification. The Trustee shall not incur personal liability of any nature in connection with any act or omission, made in good faith, in the administration of this Trust, or in carrying out any directions by the Grantor or the FDEP Secretary issued in accordance with this Agreement. The Trustee shall be indemnified and saved harmless by the Grantor or from the Trust Fund, or both, from and against any personal liability to which the Trustee may be subjected by reason of any act or conduct in its official capacity, including all expenses reasonably incurred in its defense in the event the Grantor fails to provide such defense.

Section 19. Choice of Law. This Agreement shall be administered, construed, and enforced according to the laws of the state of Florida.

Section 20. Interpretation. As used in this Agreement, words in the singular include the plural and words in the plural include the singular. The descriptive headings for each Section of this Agreement shall not affect the interpretation or the legal efficacy of this Agreement.

IN WITNESS WHEREOF the parties have caused this Agreement to be executed by their respective officers duly authorized and their corporate seals to be hereunto affixed and attested as of the date first above written. The parties below certify that the wording of this Agreement is substantially identical to the wording specified in 40 CFR 264.151(a)(1), as adopted by reference in Section 62-730.180, Florida Administrative Code, as such regulations were constituted on the date first above written.

Signature of Grantor	Signature of Trustee
Member	Vice President
Title	Title
Signature of Witness or Notary	Signature of Witness or Notary
Seal	Seal

OFFICIAL SEAL
SUSIE MOY
Notary Public - State of Illinois
My Commission Expires Aug 03, 2014

CERTIFICATION OF ACKNOWLEDGMENT FOR HAZARDOUS WASTE MANAGEMENT FACILITY TRUST FUND AGREEMENT

State of California

County of San Bernardino

On April 6, 2012 before me, Naveed Jattala, Notary Public, personally appeared Daniel P. Gillespie as Member for Lighting Resources, LLC, the Limited Liability Company described herein, who proved to me on the basis of satisfactory evidence to be the person whose name is subscribed to the within instrument and acknowledged to me that he executed the same in his authorized capacity, and that by his signature on the instrument the entity upon behalf of which the person acted executed the instrument..

I certify under PENALTY OF PERJURY under the laws of the State of California that the foregoing paragraph is true and correct.

Witness my hand and official seal.

NAVEED JATTALA
COMM. # 1916127
NOTARY PUBLIC - CALIFORNIA
SAN BERNARDINO COUNTY
My Comm. Expires Jan. 14, 2015

Naveed Jattala

Signature of Notary Public

NAVEED JATTALA

Print, Type, or Stamp Commissioned Name of Notary Public

Produced Identification D1-N9016400

Type of Identification Produced: California Drivers License

CERTIFICATION OF ACKNOWLEDGMENT FOR HAZARDOUS WASTE MANAGEMENT FACILITY TRUST FUND AGREEMENT

State of Illinois

County of Cook

The foregoing instrument was acknowledged before me this 16th day of April, 2012, by Cynthia Reis (Name of person) as Vice President (Type of authority, e.g., officer, trustee, etc.) for JPMorgan Chase Bank, National Association (Name of party on behalf of whom instrument was executed), the corporation described in and which executed the above instrument.

Susie Moy
Signature of Notary Public

Susie Moy
Print, Type, or Stamp Commissioned Name of Notary Public

rsonally Known Personally Known or Produced Identification _____

Type of Identification Produced _____

J.P.Morgan

JPMorgan Chase Bank, N.A.
Escrow Services
420 West Van Buren
Chicago, IL 60606
Telephone: 312-954-0085

Cynthia Reis
Vice President
Client Service Manager

November 3, 2014

Lighting Resources, LLC
Daniel P. Gillespie
1919 Williams Street, Suite 350
Simi Valley, CA 93065
Via Federal Express # 7717 2029 9405

Lighting Resources, LLC
Chief Financial Officer
1919 Williams Street, Suite 350
Simi Valley, CA 93065
Via Federal Express # 7717 2050 9861

Re: Trust Agreement, the "Trust Agreement", entered into as of April 16, 2012 by and between Lighting Resources, LLC, the "Grantor," and JPMorgan Chase Bank, National Association, the "Trustee".

Facility Address:
Lighting Resources, LLC,
1007 SW 16th Lane
Ocala, FL 34471

Dear Ladies and Gentlemen:

Pursuant to Section 13 of the Trust Agreement, as supplemented by a Side Letter dated April 16, 2012, Trustee hereby notifies you of its intent to resign as Trustee under the Trust Agreement and that such resignation shall be effective ninety (90) days after the date of this letter on February 1, 2015 (the "Resignation Date").

Grantor has the right to appoint a successor Trustee pursuant to Section 13 of the Trust Agreement. However, such appointment must become effective prior to the Resignation Date. If Grantor fails to provide the Trustee with a written notice instructing the Trustee to pay over all funds held in the Fund to the successor trustee prior to the close of business on the Resignation Date, then as permitted by Section 13 of the Trust Agreement, the Trustee may apply to a court of competent jurisdiction for the appointment of a successor trustee or for instructions and any expenses incurred by the Trustee as a result of the acts contemplated by Section 13 shall be paid as provided in Section 9.

Should you have any questions, please do not hesitate to call me.

Sincerely,

Cynthia Reis
Client Service Manager

Cc:
Florida Dept of Environmental Protection
Attn: Edgar Echevarria
2600 Blair Stone Road MS 4560
Tallahasse, FL 32399-6542
Via Federal Express # 7717 2075 5903

Hello Roger:

Lighting Resources LLC has maintained a closure fund for our Ocala facility in accordance with current requirements. The fund is with Chase Bank. We received a letter of resignation from Chase Bank. Our other closure funds are maintained with First Interstate Bank. We want to transfer the funds from Chase to First Interstate Bank. Please reply with your approval to transfer the funds from Chase Bank to First Interstate Bank.

Regards,

Stephen C. Secker
Lighting Resources LLC
CFO

Approval: _____
Roger Meadows

Approval _____
Daniel P. Gillespie

Jackie Camino

From: Stephen Seckar <stephen.seckar@lightingresourcesinc.com>
Sent: Monday, January 12, 2015 10:43 AM
To: Jackie Camino
Subject: RE: TGransferring trust account from Chase
Attachments: 20150112062436791.pdf

Hello Jackie:
They are resigning. See attached letter. Cynthia spoke to Dan Gillespie and told him they are getting out of the trust business for recycling companies.

Regards,

Stephen C. Seckar
Chief Financial Officer
Lighting Resources, LLC
1919 Williams Street, Ste 350
Simi Valley, California 93065
805-624-3051 Direct
805-624-0659 Facsimile
805-390-2551 Mobile

From: Jackie Camino [mailto:Jackie.Camino@fib.com]
Sent: Monday, January 12, 2015 7:22 AM
To: Stephen Seckar
Subject: RE: TGransferring trust account from Chase

Hi Stephen,

The Trust expires, or they are resigning as trustee effective that date?

Jackie Camino
Trust Specialist
***This email communication may contain CONFIDENTIAL INFORMATION WHICH ALSO MAY BE LEGALLY PRIVILEGED and is intended only for the use of the intended recipients identified above. If you are not the intended recipient of this communication, you are hereby notified that any unauthorized review, use, dissemination, distribution, downloading, or copying of this communication is strictly prohibited. If you have received this communication in error, please immediately notify us by reply email, delete the communication and destroy all copies.

From: Stephen Seckar [mailto:stephen.seckar@lightingresourcesinc.com]
Sent: Friday, January 09, 2015 5:20 PM
To: Jackie Camino
Subject: RE: TGransferring trust account from Chase

Hello Jackie:
We received notice from Chase bank that the trust fund at their institution will expire on 2/1/15.

Regards,

LIGHTING RESOURCES, LLC
1919 Williams St., Suite 350
Simi Valley, CA 93065
(805) 624-3050 • Fax (805) 285-0659

February 6, 2015

Florida Dept of Environmental Protection
Mr. Edgar Echevarria
2600 Blair Stone Road MS 4560
Tallahassee, FL 32399-6542

JP Morgan Chase Bank, NA
Attn: Cynthia Reis
420 W Van Buren St
Mail Code, IL 1-0113
Chicago, IL 60606

RE: Lighting Resources, LLC
State of Florida Hazardous Waste Facility Trust Fund

To Whom It May Concern;

Lighting Resources, LLC, Grantor of the above referenced Trust, and JP Morgan Chase Bank, N.A. as Trustee established the State of Florida Hazardous Waste Facility Trust Fund Agreement, dated April 16, 2012.

Section 13 of The Agreement states the Trustee may resign their position as Trustee, effective as of the date the Grantor appoints a Successor Trustee.

On November 3, 2014 JP Morgan Chase Bank, N.A., resigned their position as Trustee effective February 1, 2015.

In connection with the resignation of JP Morgan Chase Bank, N.A. as Trustee, Lighting Resources, LLC appointed First Interstate Bank as Successor Trustee on February 5, 2015. First Interstate Bank is qualified to serve as Trustee and has accepted the appointment of Successor Trustee, effective February 5, 2015.

JPMorgan Chase Bank, NA is hereby instructed to release the Fund to the successor Trustee pursuant to the funds transfer instructions set forth below:

Bank Name:	First Interstate Bank
Bank Address:	P.O. Box 30918 Billings, MT 59116
Bank ABA:	092901683
Account Name:	First Interstate Wealth Management
Account Number:	1101900122
FFC:	Lighting Resources, LLC Trust - FL, Account Number of 32659560

LIGHTING RESOURCES, LLC
1919 Williams St., Suite 350
Simi Valley, CA 93065
(805) 624-3050 • Fax (805) 285-0659

Enclosed you will find attached copies of the appointment by Lighting Resources, LLC of First Interstate Bank as Successor Trustee, as well as a copy of the acceptance by First Interstate Bank of said appointment. Included is a copy of the Corporate Resolution from First Interstate Bank documenting the authority of their officers Jackie Camino and Robert Leibrich to enter into this agreement.

Please mail the original trust document at your earliest convenience to:

First Interstate Bank
Attn: Jackie Camino
P.O. Box 2007
Sheridan, WY 82801

If you have any questions regarding this matter, please contact Stephen Seckar, CFO for Lighting Resources at 805-624-3051 or Stephen.seckar@lightingresourcesinc.com. Questions regarding the provided transfer instructions can be made to Jackie Camino, Trust Specialist for First Interstate Bank at 307-672-1492 or Jackie.camino@fib.com.

Regards,

Daniel P. Gillespie, President
Lighting Resources, LLC

Jackie Camino, CTFA
Trust Specialist

Enclosures

Acceptance of First Interstate Bank as Successor Trustee

Whereas Lighting Resources LLC, a Limited Liability Company located in California, as Grantor and JP Morgan Chase Bank, N.A. as Trustee established the State of Florida Hazardous Waste Facility Trust Fund Agreement, dated December 14, 2011, hereafter referred to as "The Agreement"; and

Whereas under Section 13 of The Agreement, the Trustee may resign their position as trustee, effective as of the date the Grantor appoints a successor trustee; and

Whereas on November 3, 2014 JP Morgan Chase Bank, N.A. resigned their position as Trustee effective February 1, 2015; and

Whereas Dan Gillespie and Roger Meadows, authorized persons, have appointed First Interstate Bank as Successor Trustee as verified via a document received 2/4/2015 through email transmission from Stephen Seckar, CFO of Lighting Resources, LLC; and

Whereas First Interstate Bank is qualified to serve as Trustee.

Now, therefore, First Interstate Bank hereby agrees to accept the appointment as Successor Trustee and undertake the fiduciary duties with respect to the State of Florida Hazardous Waste Facility Trust Fund Agreement dated December 14, 2011. First Interstate Bank will succeed as to all rights, duties, obligations and limitations reserved or granted to corporate trustees under the terms of the Trust.

FIRST INTERSTATE BANK
SUCCESSOR TRUSTEE

By: Jackie Camino
Jackie Camino, Trust Specialist

By
Robert Leibrich, Vice President

STATE OF WYOMING)
)
COUNTY OF SHERIDAN)

The above and foregoing Acceptance of Successor Trustee was acknowledged before me by Jackie Camino & Robert Leibrich, this 5th day of February, 2015.

Witness my hand and official seal.

My Commission expires: 4-13-16

Barbara Rae Fort
Notary Public

BARBARA RAE FORT · NOTARY PUBLIC
COUNTY OF SHERIDAN STATE OF WYOMING
MY COMMISSION EXPIRES: April 13, 2016

First Interstate
Wealth Management

First Interstate Account Number: 32659560
First Interstate Account Name: Lighting Resources Tr Florida

Delivery Instructions

*In accordance with Rule 387, the confirmation, affirmation and settlement of COD transactions should be processed through the Institutional Delivery System (IDS) with settlement at Depository Trust Company (DTC.)

FED Eligible Items	Northern Chicago/Trust ABA #: 071000152 For Account #17-02504, First Interstate Bank FBO: First Interstate Account # and Account Name
DTC Eligible Items	DTC# 2669, Northern Trust Company (Agent) Custodial Account #: 17-02504, First Interstate Bank FBO: First Interstate Acct # and Account Name

For all Cost Basis Reporting:
Please use either the CBRS Module or provide to this email: fsops@fib.com

DTC Trade Settlement	Agent Bank: The Northern Trust Company Agent Bank Clearing #: DTC 2669 Custodial Account #: 17-02504, First Interstate Bank FBO: First Interstate Account # and Account Name Agent Bank Custodian #: 20290 Institutional # at DTC: 14264

For setup of trading accounts:
Include the First Interstate Wealth Mgmt acct number in the free form instruction field or the client internal account field. Contact Sara Toavs (406)-255-5246 with questions regarding this field.

Eurobond, Euroclear, Eurodollar Items	Northern Trust Company- London Euroclear #: 90125 Re: First Interstate Bank, Acct # 17-02504
Physical Items and Savings Bonds	First Interstate Wealth Management Attn: Wealth Mgmt Operations 401 N 31st Street - 3rd Floor Billings, MT 59101 Reference First Interstate Account # and Account Name
Checks	First Interstate Wealth Management Attn: Wealth Mgmt Operations, 3rd Floor FBO: First Interstate Account # and Account Name P.O. Box 30918 Billings, MT 59116-0918
FED Wire Instructions	First Interstate Bank ABA #092901683 First Interstate Wealth Management Acct: 1101900122 FBO: First Interstate Account # and Account Name

Mutual Fund Items *Please transfer mutual fund shares in-kind to the fund account number(s) listed below. **We are not ACAT eligible.**

Cusip/Symbol	Fund Account Number

Registration at Fund Company: Setru & Co, Attn Wayne Brackney, PO Box 30918, Billings MT 59101
Mutual funds are cleared through Matrix Financial Services, NSCC #5954

*Call Alis Larson at (406) 255-5229 or email alis.larson@fib.com with any questions regarding these instructions.

Hello Roger:

Lighting Resources LLC has maintained a closure fund for our Ocala facility in accordance with current requirements. The fund is with Chase Bank. We received a letter of resignation from Chase Bank. Our other closure funds are maintained with First Interstate Bank. We want to transfer the funds from Chase to First Interstate Bank. Please reply with your approval to transfer the funds from Chase Bank to First Interstate Bank.

Regards,

Stephen C. Seckar
Lighting Resources LLC
CFO

Approval: _____
Roger Meadows

Approval _____
Daniel P. Gillespie

Appendix H

Insurance

Mail original completed form to: Department of Environmental Protection
2600 Blair Stone Road, Mail Station 4560
Tallahassee, Florida 32399-2400

For assistance call: 850-245-8707

STATE OF FLORIDA
HAZARDOUS WASTE TRANSPORTER
LIABILITY ENDORSEMENT

1. This endorsement certifies that the policy to which the endorsement is attached provides liability insurance covering bodily injury and property damage including environmental restoration for sudden accidental occurrences in connection with the insured's obligation to demonstrate financial responsibility under Florida Administrative Code Rule 62-730.170.

The coverage applies at:

EPA/DEP I.D. No.	Name	Physical Address
FLR000070565	Lighting Resources, LLC	1007 SW 16th Ln, Ocala, FL 34471

(If coverage is for multiple facilities, identify each facility insured.)

This insurance is primary and the company shall not be liable for amounts in excess of $ 1,000,000 for each accident, exclusive of the legal defense costs.

This insurance is excess and the company shall not be liable for amounts in excess of $_____ for each accident in excess of the underlying limit of $_____ for each accident, exclusive of legal defense costs.

2. The insurance afforded with respect to such occurrences is subject to all of the terms and conditions of the policy; provided, however, that any provisions of the policy inconsistent with subsections (a) through (d) of this Paragraph are hereby amended to conform with subsections (a) through (d):

(a) Bankruptcy or insolvency of the insured shall not relieve the Insurer of its obligations under the policy to which this endorsement is attached.

(b) The Insurer is liable for the payment of amounts within any deductible applicable to the policy, with a right of reimbursement by the insured for any such payment made by the Insurer.

(c) Whenever requested by the Secretary (or designee) of the Florida Department of Environmental Protection (FDEP), the Insurer agrees to furnish to the Department a signed duplicate original of the policy and all endorsements.

(d) Cancellation of this endorsement, whether by the Insurer or the insured and any other termination of this endorsement (e.g., expiration, non-renewal) , will be effective only upon written notice and only after the expiration of thirty (30) days after a copy of such written notice is received by the Secretary of the FDEP as evidenced by certified mail return receipt.

Mail original completed form to: Department of Environmental Protection
2600 Blair Stone Road, Mail Station 4560
Tallahassee, Florida 32399-2400

For assistance call: 850-245-8707

(e) The Insurer shall not be liable for the payment of any judgment or judgments against the Insured for claims resulting from accidents which occur after the termination of the insurance described herein, but such termination shall not affect the liability of the Insurer for the payment of any such judgment or judgments resulting from accidents which occur during the time the policy is in effect.

Attached to and forming part of policy No. H08416266 015 issued by

ACE American Insurance Company, herein called the Insurer, of
[Name of Insurer]

436 Walnut Street, Philadelphia, PA 19106 to
[Address of Insurer]

Lighting Resources, LLC of
[Name of Insured]

1919 Williams Street, Suite 35, Simi Valley, CA 93065
[Physical Address of Insured]

this 1st (Day) day of October (Month), 20 21 (Year).

The effective date of said policy is 1st (Day) day of October (Month), 20 21 (Year).

The expiration date of said policy is 1st (Day) day of October (Month), 20 22 (Year).

I hereby certify that the Insurer is licensed to transact the business of insurance, or eligible to provide insurance as an excess or surplus lines insurer, in one or more states including Florida.

Robert Owens
[Signature of Authorized Representative of Insurer]

Robert Owens
[Type Name]

AVP
[Title]

Authorized Representative of

ACE American Insurance Company
[Name of Insurer]

11575 Great Oaks Way, Suite 200, Alpharetta, GA 30022
[Address of Representative]

DEP Form # 17-730.900(5)(a)
Form Title: HWF Transporter Certificate of Liability Insurance
Effective Date: 1-29-06
DEP Application #

STATE OF FLORIDA
HAZARDOUS WASTE TRANSPORTER CERTIFICATE OF LIABILITY INSURANCE

1. Ace American Insurance Company
(Name of Insurer)

(the "Insurer"), of 436 Walnut Street, Philadelphia, PA 19106
(Address of Insurer)

hereby certifies that it has issued liability insurance covering bodily injury and property damage including environmental restoration for sudden accidental occurrences to

Lighting Resources, LLC
(Name of Insured)

(the "Insured"), of 1919 Williams Street, Suite 350, Simi Valley, CA 93065
(Address of Insured)
in connection with the insured's obligation to demonstrate financial responsibility under Florida Administrative Code Rule 62-730.170. The coverage applies at:

EPA/DEP I.D. No.	Name	Location
FLR000070565	Lighting Resources, LLC	1007 SW 16th Ln, Oncala, FL 34471

(If coverage is for multiple facilities, identify each facility insured.)

This insurance is primary and the company shall not be liable for amounts in excess of $ 1,000,000 for each accident, exclusive of legal defense costs. The coverage is provided under policy number H08416266 015, issued on 10/01/202021 (date).
The effective date of said policy is 10/01/2021 (date) and the expiration date of said policy is 10/01/2022 (date).

This insurance is excess and the company shall not be liable for amounts in excess of $_____ for each accident in excess of the underlying limit of $_____ for each accident, exclusive of legal defense costs. The coverage is provided under policy number_____, issued on_____ (date). The effective date of said policy is _____ (date) and the expiration date of said policy is _____ (date).

2. The Insurer further certifies the following with respect to the insurance described in Paragraph 1:

(a) Bankruptcy or insolvency of the insured shall not relieve the Insurer of its obligations under the policy.

(b) The Insurer is liable for the payment of amounts within any deductible applicable to the policy, with a right of reimbursement by the insured for any such payment made by the Insurer.

(c) Whenever requested by the Secretary (or designee) of the Florida Department of Environmental Protection (FDEP), the Insurer agrees to furnish to the Department a signed duplicate original of the policy and all endorsements.

(d) Cancellation of the insurance, whether by the Insurer or the Insured and any other termination of the insurance (e.g., expiration, non-renewal), will be effective only upon written notice and only after the expiration of thirty (30) days after a copy of such written notice is received by the Secretary of the FDEP as evidenced by certified mail return receipt.

(e) The Insurer shall not be liable for the payment of any judgment or judgments against the Insured for claims resulting from accidents which occur after the termination of the insurance described herein, but such termination shall not affect the liability of the Insurer for the payment of any such judgment or judgments resulting from accidents which occur during the time the policy is in effect.

I hereby certify that the Insurer is licensed to transact the business of insurance, or eligible to provide insurance as an excess or surplus lines insurer, in one of more States including Florida.

Robert Owens
(Signature of Authorized Representative of Insurer)

Robert Owens
(Typed name)

AVP Underwriting
(Title)

Authorized Representative of

Ace American Insurance Company
(Name of Insurer)

436 Walnut Street, Philadelphia, PA 19106
(Address of Representative)