FILE

CH2MHILL

3011 S.W. Williston Road
Gainesville, Florida 32608-3964
Tel (352) 335-7991

FLORIDA DEPARTMENT OF
ENVIRONMENTAL PROTECTION

FEB 07 2011

SOUTHWEST DISTRICT
TAMPA

January 31, 2011

Nancy Gaskin
Solid Waste Section
FDEP South West District
13051 N. Telecom Parkway
Temple Terrace, FL 33637

Subject: West Pasco County Class III Landfill, Pasco County
Pending Permit Modification No.: 26254-002/IM to
Existing Permit No.:26445-001-SO/T3
WACS Id No.:45920

Dear Ms. Gaskin:

This letter is a response to the department's third request for information dated January 20, 2011 regarding the above mentioned subject matter. Items that have been revised are the only items that are included in this package.

General:

1. The requested information and comments below do not repeat the information submitted by the applicant. However, every effort has been made to concisely refer to the section, page drawing detail number, etc. where the information has been presented in the original submittal.

   Response to Comment 1. – Acknowledged.

2. Please Submit **4 copies** of all requested information. Please specify if the revised information is intended to supplement, or replace, previously submitted information. Please submit all revised plans and reports as a complete package. For revisions to the narrative reports, deletions may be struckthrough (~~struckthough~~) and additions may be underlined (underlined) or a similar notation method may be used. This format will expedite the review process. Please include the revision date on all revised pages.

   Response to Comment 2. – Acknowledged.

3. Please provide a summary of all revisions to drawings, and indicate the revision on each of the applicable plan sheets. Please use a consistent numbering system for drawings. If new sheets must be added to the original plan set, please use the same

numbering system with a prefix or suffix to indicate the sheet was an addition, e.g. Sheet 1A, 1B ,P1-A, ect.

Response to Comment 3. – Acknowledged.

Documents to be replaced;
Table of Contents - Page 2 Attachments
Section 2, Additional Information (62-701,FAC)
Attachment F - Citizen Drop Off Operations Plan
Attachment I - Citizen Drop Off Layout

4. Please be advised that although some comments do not explicitly request additional information, the intent of all comments shall be to request revised calculations, narrative, technical specifications, QA documentation, plan sheets, clarification to the item, and/or other information as appropriate. **Please be reminded that all calculations must be signed and sealed by the registered professional engineer (or geologist as appropriate) who prepared them.**

Response to Comment 3. – Acknowledged.

Solid Waste Class III Landfill Application for Intermediate Modification

3. Section 1 Permit Application

c. **Section B, Additional Information, Replacement page 2-2 (Dec 210).** This section states that it refers to the CDO and seems to indicate that engines will be accepted at the CDO while no management procedures are provided in the CDO Operations Plan. Please clarify whether these materials are accepted at the CDO and revise this section accordingly (see comment #8.b below).

Response to Comment 3.c. – Engines will not be accepted in the CDO. Please see the revised Section 2 Additional Information (62-701, FAC) and Attachment F, CDO Operations Plan.

4. Plans and Drawings, Rules 62-701.320(7) (f), and 62-701.710(2) (b), F.A.C. Please provide the following additional information and revisions to the plans.

As previously requested, please provide full sized 22 by 34 inch drawings showing all revisions to replace drawings initially submitted as part of the application package. These revised drawings should include all final revisions made during the review process for each drawing.

Response to Comment 4. – Acknowledged.

6. Cover Page Format, Rule 62-701.320(7) (d), F.A.C. As previously requested, please provide a revised cover page for the application that is signed and sealed by the project engineer.

Response to Comment 6- Four (4) signed and sealed cover pages are included in this submittal.

8. Citizens Drop Off Operations Plan

a. **As previously requested,** please clarify all references to a "transfer station" in this operations plan, and a. *As previously* requested, please clarify al l references t o a "transfer station" in this operations plan, and revise all appropriate sections accordingly. This includes, **for example, references to features which are not shown in the current design of this facility, including leachate collection system components and exhaust fans.**

Response to Comment 8a. – These items have been revised and updated. Please see Attachment F, Operations Plan.

b. **§1.1 Facility Description.** This section indicates that yard trash and engines may be accepted at the CDO. Please provide specific procedures for management of these materials (see comment #3 .c. above). Please provide a table listing the maximum quantity and storage times for each waste and recyclable materials to be accepted at the CDO. Please include this table in the Operations plan.

Response to Comment 8b. – Engines will not be accepted in the CDO. Please see the updated and revised Attachment F, CDO Operations Plan.

e. **§1.1.2 MSW.** As previously requested, please provide information regarding leak prevention and containment for any leachate that may be generated and leak from the compactors. Unless information is provided that demonstrates that the leachate will not violate Department water quality standards and criteria, containment procedures should not include leachate running off to stormwater as indicated in this response. Please revise this section as appropriate.

Response to Comment 8e. – There are ten MSW containers proposed for the CDO. The containers are covered by a canopy, which minimizes the intrusion of rain water. The CDO attendant observes the containers for spills and leakage, and any noticeable spills or leakage is cleaned up with absorbent material in accordance with Paragraph 1.3.2.1 of the Operations Plan.

f. **§1.3 Contingency Plan.** The response to this item lists Rita Peckenschneider as the primary emergency coordinator, while her name appears struckthrough twice in the

revised Operations Plan. Please specify the primary emergency coordinator, and revise this section accordingly.

Response to Comment 8f. – The primary emergency coordinator for West Pasco is Ron Walker, Solid Waste Superintendent (727) 856-0119.

h. **§1.7 Facility Closure.** The drawings submitted do not appear to show a leachate collection system in the proposed CDO. As previously requested, please clarify the references to drains, and leachate and sludge volumes in this section. Alternatively, provide revised drawings as appropriate.

Response to Comment 8h. – This section has been revised and updated. See Attachment F, Operations Plan.

i. **§1.1.4 Waste Tires/Waste Oil (December 2010).** Please clarify whether waste oil will be accepted, §l.l indicates that it will not be. If waste oil will be accepted please provide specific procedures for management of this material (see comment #8.b. above). If waste tires will be accepted but not stored in a roll off, please provide specific management and storage procedures for these tires. Please revise this section accordingly.

Response to Comment 8i. – Waste tires and oil will not be accepted at the CDO. Any tires and waste oil discovered in a load will be directed by the attendant for the citizen to drive over to the waste tire and oil storage to unload these items properly.

Regards,

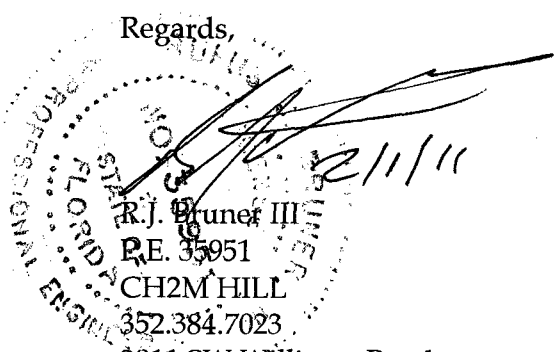

R.J. Bruner III
P.E. 35951
CH2M HILL
352.384.7023
3011 SW Williston Road
Gainesville, FL 32608

Dept. Of Environmental Protection
FEB 07 2011
South District

Solid Waste System Upgrade

Application for a Permit to Construct, Operate, Or Modify a Waste Processing Facility

West Pasco County Class III Landfill

Existing Permit No: 26445-001-SO/T3

WACS ID: 45920

Prepared for

Pasco County

By:

R.J. Bruner IIII, P.E.
FL P.E. No. 35951

CH2MHILL

Dept. Of Environmental Protection
FEB 07 2011
Southwest District

Pasco County

Replacement/Revised/New Pages for the Application for a Permit to Construct, Operate, Modify or Close a Solid Waste Management Facility

Solid Waste System Upgrade at West Pasco Solid Waste Management Facility

Prepared for

Pasco County Public Works Utilities

by:

CH2MHILL

3011 SW Williston Road
Gainesville, Florida 32608
Certification of Authorization Number: EB0000072

2/1/11

R.J. Bruner III, P. E.
FL P.E. No. 35951

Date: ~~October 2010 December 2010~~January 2011

Table of Contents

Section			Page
1	**Permit Application Checklist (FAC 62-701)**		**1-1**
	1.1	Executive Summary	1-1
	1.2	Facility Owner and Operator	1-1
	1.3	Application {FDEP Form 62-701.900(1)}	1-2
		1.3.1 PART A - General Information	1-2
		1.3.2 PART B - Disposal Facility General Information	1-2
		1.3.3 PART C - Prohibitions	1-2
		1.3.4 PART D - Solid Waste Management Facility Permit Requirements	1-2
		1.3.5 PART E - Landfill Permit Requirements	1-2
		1.3.6 PART F - General Criteria for Landfills	1-2
		1.3.7 PART G - Landfill Construction Requirements	1-2
		1.3.8 PART H - Hydrogeological Ingestion Requirements	1-2
		1.3.9 PART I - Geotechnical Investigation Requirements	1-2
		1.3.10 PART J - Vertical Expansion of Landfills	1-2
		1.3.11 PART K - Landfill Operation Requirements	1-2
		1.3.12 PART L - Water Quality and Leachate Requirements	1-3
		1.3.13 PART M - Special Waste Handling Requirements	1-3
		1.3.14 PART N - Gas Management System Requirements	1-3
		1.3.15 PART O - Landfill Closure Requirement	1-3
		1.3.16 PART P - Other Closure Requirements	1-3
		1.3.17 PART Q - Long Term Care Requirements	1-3
		1.3.18 PART R - Financial Assurance	1-3
		1.3.19 PART S - Certification by Applicant and Engineer or Public Officer	1-3
	1.4	Other Requirements	1-3
		1.4.1 Zoning Map & Land Use {FAC 62-701.330(3)(a)}	1-3
		1.4.2 Vicinity Map {FAC 62-701.330(3)(b)}	1-3
2	**Additional Information (62-701, FAC)**		**2-1**
	2.1	Solid Waste	2-1
	2.2	Site Plan	2-1
	2.3	Operations and Function of Processing Facility	2-1
	2.4	Facility Design Requirements	2-2
	2.5	Loading, Unloading and Processing Area	2-3
	2.6	Topographic Survey and Legal Description	2-3
	2.7	Operation Plan	2-3
	2.8	Closure Plan	2-3
	2.9	Stormwater Control	2-3
	2.10	Recordkeeping Requirements	2-3

Attachments

A Permit Application
B Aerial Regional Map
C Construction Drawings
D Stormwater Report/Geotechnical Report
E Permit Fee
F Operations Plan
G Notice of Application
H Environmental Resource Permit
I Citizen Drop Off Layout

SECTION 2

Additional Information (62-701, FAC)

2.1 Solid Waste

The Pasco County Class III Landfill will collect, store, process, and dispose of construction demolition and debris from residential and commercial sources.

2.2 Site Plan

Proposed design drawings including a proposed site plan with a scale 1"= 30' can be found in Attachment E as part of this Construction Drawings. The site is located in Pasco County, Florida, on Section 25 and 26, Township 24, Range 17 at 14230 Hays Road Spring Hill, FL, 34610-3823.

The site is approximately 10.288 acres in size. There are isolated wetlands within 200 feet of the site.

2.3 Operations and Function of Processing Facility

The existing facility will remain as currently operated. Addition to the facility will include new inbound and outbound scales, bypass lanes, associated roadwork, and new scale house. A new citizen drop off area may be constructed with an attendant building, this will be an alternate bid item on plans.

The above grade platform scales will include one (1) inbound and one (1) outbound. With inbound and outbound bypass lanes around each set of scales. The Fairbanks scales are identical to the scale being installed at the wastewater plant will be sole sourced. The County currently uses PC Scale software.

Additional road for egress of unacceptable customer loads and the re-scaling of tractor-trailer loads from recycle area carrying materials off site.

There is a proposed canopy over the scales. Lighting will be provided under the canopy. There are proposed gates at all scales and bypass lanes.

The citizen drop off area is comprised of a stationary compactor and bay areas for open top boxes, an attendant building, a canopied golf cart parking area and a bulky household items holding area. ~~household hazardous holding Area~~. The compaction and open top boxes will be under a canopy to minimize the potential for leachate production.

The Facility will be open for receiving and disposing material between the hours of 7:00 a.m. to 5:00 p.m. from Monday through Saturday. The last load accepted is 4:30 p.m. The gates to the scale houses close at 5:00 p.m. The Facility will be closed on Sundays, and City approved State, and national holidays.

The following policies apply to the CDO:

Per the West Pasco County Class III Landfill website the current policies that are strictly enforced are as follows:

- The citizen drop-off area is for residential use only. No business or commercial use will be permitted.
- ~~All commercial haulers will be charged $56.70 per ton for all debris, including scrap metal.~~
- Only normal household waste that would be placed at the curbside for regular pickup shall be exempt from payment.
- ~~Exceptionally large loads of furniture or other waste (to be determined by the Solid Waste Attendant) will be escorted to the tipping floor of the waste to energy facility and will be charged the going rate, which is currently $56.70 per ton.~~
- ~~Mixed loads requiring special handling will be accepted and charged at the going rate, which is currently $56.70 per ton. (This means solid waste and/or construction debris or other waste that cannot be incinerated.)~~
- All M.S.W. (garbage) from households must be in a closed container (i.e., bags, boxes, etc.); no charge.
- Furniture (metal not included) may still be placed in the citizen drop-off container. Exception: sleeper sofas will be sent to the Class III Landfill. No M.S.W. will be permitted in the Class III Landfill.
- "Out of County" waste will not be accepted.
- ~~All gas and oil must be removed prior to disposal of engines.~~

For a more detailed description of facility operations, including procedures for start up operations, scheduled (daily and weekend) and unscheduled (due to equipment breakdown, fire and natural disaster, etc.) shut down operations, and safety hazard and control methods refer to the *West Pasco Class III Landfill Operations and Maintenance Manual.*

2.4 Facility Design Requirements

The scale house building will be an enclosed building of approximately 621 square feet. The building will be one-story building with a work area, break area, file storage, restroom, and IT room. The building floor plan is included as Attachment C Construction Drawings Sheet 10-A-102.

All interior spaces for the scale house building will be air conditioned and heated. The heater and air conditioned system will be packaged, rooftop, direct expansion (DX) heat pump, with auxiliary electric heating as needed. HVAC systems will be designed to maintain the following space temperature set points: Cooling: 75 degrees F, Heating: 70 degrees F.

The attendant building is will be designed as a modular building using insulated aluminum panel, steel door assemblies, aluminum windows storm shutters approximately 450 square feet. The building will include an attendant room, rest room, and a garage. The building floor plan is included in Attachment C Design Drawings Sheet 30-P-101.

All interior spaces for the attendant building will be air conditioned and heated. The heater and air conditioned system will be packaged, wall mount, direct expansion (DX) heat pump, with auxiliary electric heating as needed. HVAC systems will be designed to maintain the following space temperature set points: Cooling: 75 degrees F, Heating: 70 degrees F.

2.5 Loading, Unloading and Processing Area

For a detailed description of loading, unloading, and processing area procedures refer to the *West Pasco Class III Landfill Operations and Maintenance Manual.*

2.6 Topographic Survey and Legal Description

A topographic survey of the project site was conducted by CH2M HILL. The legal description is in the original approved permit and has not been changed.

2.7 Operation Plan

The Operation Plan requirements are addressed in *West Pasco Class III Landfill Operations and Maintenance Manual.* The improvements will be operated in the same manner as the existing facility guidelines.

2.8 Closure Plan

A Closure Plan identifying the steps and procedures to close the Facility in accordance with FAC 62-701.710(6) is has no changes.

2.9 Stormwater Control

Stormwater at the Facility will be controlled in accordance with Part IV of Chapter 373, F. S., and the rules promulgated thereunder. An Environmental Resource Permit Application is being prepared by CH2M HILL and will be submitted to FDEP's Southwest District for review. A copy of the Stormwater Report is found Attachment D.

2.10 Recordkeeping Requirements

The Facility will exercise good recordkeeping activities. Records will be maintained on a daily basis. The information recorded will include quantities of solid waste received, processed, stored, and removed for recycling or disposal. The city of origin of the waste will be recorded.

The daily records will be compiled on a monthly basis and will be available at all times for inspection by the FDEP. The records will be saved for a minimum of three years.

Quarterly Reports will be submitted to FDEP Southwest District office. These reports will be due January 1, April 1, July 1, and October 1 of each year. Annual Reports will be submitted on Form 62-701.900(7) to FDEP Tallahassee office with a copy to FDEP Tampa office. The Annual Report will be due April 1 of each year".

Attachment A
Permit Application

No Changes since previously submitted.

Attachment B
Aerial Regional Map

No Changes since previously submitted.

Attachment C
Construction Drawings

No Changes since previously submitted.

Attachment D
Stormwater Report/Geotechnical Report

No Changes since previously submitted.

Attachment E
Permit Fee

Previously submitted May 2010.

Attachment F
Operations Plan

Replace Citizen Drop off Area Operations Plan.

Pasco County, Florida

Citizen Drop Off

Operations Plan
For
West Pasco County Solid Waste
and
Resource Recovery Facilities

1.1 CDO Facility Description 3
1.1.1 Description of Loading, Unloading, Storage, and Processing Areas 3
1.1. 2 MSW 4
1.1.3 Bulky Household Waste 4
1.1.4 ~~Future~~ Blue Bag Collection & Recycling-Drop-Off 4
1.1.5 Hazardous Waste, Waste Tire/Waste Oil 4
1.1.4 Waste Tires/Waste Oil 4
1.1.6 Storage Capacity & Storage Time 4
1.2 Minimum Design Requirements 5
1.2.1 Provisions for Weighing Incoming Materials 5
1.2.2 Safety Procedures for General Public 5
1.3 Contingency Plan 5
1.3.1 Operational Interruptions 5
1.3.2 Emergencies 6
1.3.2.1 Response Procedures to Liquid Spills or Leaks 6
1.3.2.2 Emergency Response to Fire 6
1.3.2.3 Arrangements with Emergency Authorities 6
1.3.2.4 Emergency Response Equipment 6
1.3.2.5 Evacuation Plan 7
1.3.2.6 Emergency Coordinators 7
1.3.2.7 Responsibilities of the Emergency Coordinator 7
1.3.2.8 Agencies to be Notified 8
1.4 Record Keeping 8
1.5 Maximum Waste Storage Time 8
1.6 Vector/Odor Control 8
1.7 Facility Closure 9

1.1 CDO Facility Description

1.1.1 Description of Loading, Unloading, Storage, and Processing Areas

Prior to entering the CDO, ~~The~~ customers ~~would~~ drive onto the scale and a county employee ~~would~~ inspect their load. Depending on the type of load a fee maybe required. Following inspection at the scalehouse, the scale attendant directs ~~waste~~ some waste collection and private vehicles to deliver waste directly to the Citizen Drop Off Area (CDO). The location of the CDO is shown on the site plan in Attachment C, Construction Drawings, Sheet 05-C-101, 05-C-104, 05-C-106 and Attachment I, Citizen Drop Off Layout. ~~Vehicles drive into the paved CDO area~~. Policies applicable to the CDO are:

1. The citizen drop-off area is for residential use only. No business or commercial use is permitted.
2. Only normal household waste that would be placed at the curbside for regular pickup shall be exempt from payment.

~~2. Exceptionally large loads of furniture or other waste (to be determined by the Solid Waste Attendant) will be escorted to the tipping floor CDO and will be charged the going rate, which is currently $56.70 per ton.~~

~~3. Mixed loads requiring special handling will be accepted and charged at the going rate, which is currently $56.70 per ton. (This means solid waste and/or construction debris or other waste that cannot be incinerated.)~~

3. All municipal solid waste (garbage) from households must be in a closed container (i.e., bags, boxes, etc.); no charge.
4. Furniture (metal not included) may still be placed in the citizen drop-off container. Exception: sleeper sofas will be sent to the Class III Landfill. ~~No municipal solid waste will be permitted in the Class III Landfill.~~

~~5. Chemically-treated wood is not allowed in the citizen drop-off area. Other lumber, which is less than four (4) feet in length and six (6) inches in diameter, may be put in the citizen drop-off containers.~~

~~6. Chemically-treated wood and lumber in excess of four (4) feet and six (6) inches in diameter will be charged the going rate, which is currently $56.70 per ton.~~

~~7. Yard waste will be charged $56.70 per ton.~~

~~8. All yard waste over four (4) feet in length or greater than six (6) inches in diameter will be charged at the going rate, which is currently $56.70 per ton.~~

~~9. Special wastes: asbestos $100.00 per ton; $100.00 per event.~~

~~11.Construction debris: $56.70 per ton ($56.70 per ton is prorated at $2.83 per 100 pounds).~~

5. "Out of County" waste will not be accepted.

~~12. All gas and oil must be removed prior to disposal of engines.~~

~~All waste processing activities (MSW disposal, tire shredding, wood chipping, etc.) take place at the Pasco County Resource Recovery Facility on Hayes Road in New Port Richey, Florida.~~

Individuals who refuse to follow the rules and policies of the Pasco County Solid Waste and Resource Recovery Section will be prohibited from the use of this facility.

1.1. 2 MSW

MSW is stored in a covered 40-CYcontainers for transfer to the tipping floor at West Pasco Solid Waste & Resource Recovery Facility, which is done at least once a week. Procedure to handle any possible spills in this area is provided in the section 1.3.2.1 Response Procedures to Liquid Spills or Leaks of this Operations Plan. Initially there will be (4) stationary compactors and (6) 40 CY –roll off containers. As resources become available additional compactors may be installed in place of a 40 CY-roll off container.

1.1.3 Bulky Household Waste

Bulky household waste will be stored within the push walls of the CDO located to the eastside of the CDO. These items will be transported to the tipping floor at West Pasco Solid Waste & Resource Recovery Facility. Items that are classified as bulky household items are furniture and carpeting and other items of this nature.

1.1.4 ~~Future~~ Blue Bag Collection & Recycling-Drop-Off

~~There is an area that is reserved between the MSW storage and bulky household waste for future storage of recyclables. At this location 6-8 CY containers, pallets and drums could be stored and used as needed for future growth of the CDO.~~

Recyclable materials and blue bags will be stored in (1) 40-CY container at the CDO. The recyclables and blue bags will be transported to the Pasco County Recycling Facility. This container is covered when full, during inclement weather, and at the end of each day.

1.1.5 Hazardous Waste, Waste Tire/Waste Oil

Hazardous waste, waste tires, and waste oil are not to be accepted at the CDO. If any hazardous waste items such as fluorescent light bulbs are discovered in the CDO they will be temporarily stored in a container in the attendant garage at the CDO and transported to the household hazardous waste storage area located on the northwest portion of the facility. If tires and waste oil are discovered in a load, the attendant will direct the citizen to drive over to the waste tire or oil storage area to unload these items properly.

~~1.1.4 Waste Tires/Waste Oil~~

~~Collected waste tires are stored in a 40-cubic yard roll-off container for transported to the Tire Processing site at the West Pasco Facility located northwest of the CDO area. Waste tires accumulated at the drop-off center will be removed within seven days of receipt.~~

1.1.6 Storage Capacity & Storage Time

Storage capacities and storage times are summarized in Table 1 below.

Table 1 – Storage Capacities & Time

Waste Type	Max Capacity	Storage Time	
		Typical	Maximum
MSW	Ten (10) 40-CY containers Total = 400 CY	12 hours	48 hours
Bulky Household	1,400 CY	24 hours	5 days
Blue Bag Storage/Recyclables	One (1) 40-CY container	24 hours	5 days

1.2 Minimum Design Requirements

The citizen drop off area meets the minimum design requirements of Rule 62-701.710(3), F.A.C. as follows:

1.2.1 Provisions for Weighing Incoming Materials

All incoming waste collection vehicles stop on the scalehouse to be weighed. The waste unloading area is adequate for the expected quantity of incoming waste material. Wastes are transferred from the waste unloading area to a transfer trailer in the waste loading area as soon as practical. The transfer trailers deliver the wastes to the Pasco County Resource Recovery Facility as soon as they are filled.

1.2.2 Safety Procedures for General Public

All general public entering the citizen drop off area are informed of safety procedures by the scalehouse attendant upon entering the site at the scalehouse. The public is also directed to remain in their vehicles until they are advised it is safe to get out and unload their vehicles. Children are instructed to remain in the vehicles. In addition, on-site signage directs the general public to various locations around the site. Personnel are available to supervise and assist the general public as required during all hours of operation. The general public is not permitted to use the citizen drop off area unsupervised.

1.3 Contingency Plan

1.3.1 Operational Interruptions

In the event of an emergency or delay in transporting the wastes including fires, natural disasters, etc, or if the citizen drop off area is rendered inoperable, the waste collection vehicles will be routed directly to the Pasco County Resource Recovery Facility for disposal, and FDEP will be notified within 24 hours. Other contingency policies in place at the facility are outlined below:

Implementation of the provisions of the facility's operations and contingency plans is the responsibility of the following individuals:

- Ron Walker, Solid Waste Superintendent
- John Power, Solid Waste Facilities Manager

Jointly, although each has individual authority, these individuals will assess the impact of a given incident. Based on the findings, those responsible will take all necessary steps to resolve the situation and notify the proper authorities. The position of "Solid Waste Facilities Manager" reviews the operations plan at least annually. The plan must be revised when:

- Regulations which affect the plan are revised
- The plan fails in an emergency
- The facility physically changes
- The list of Emergency Coordinators changes
- The list of emergency equipment changes

All revisions to the operations plan will be sent to FDEP for approval prior to implementation.

Upon discovery of a hot load the waste unloading area the attendant will immediately remove the load and/or box and transfer the load to the Waste to Energy tipping floor. ~~is vacated. The scale house attendant and Emergency Response Coordinator are notified and the Fire Department will be notified. Upon receipt of such load(s) the container will be drenched with the water available on-site using hoses. Most waste containers have a screw nozzle port for connecting to a water hose and the waste is drenched in the container itself. The load is soaked during dumping and it is wetted till the waste is cooled. The liquid from the floor is collected and stored as leachate.~~

~~If the hot load is unloaded, the facility personnel shall attempt to contain the fire until the fire department has arrived unless the fire is out of control and is a danger to employees. If this occurs, the facility is to be evacuated. Once the emergency has ended any ponding water shall be collected leachate.~~

1.3.2 Emergencies

1.3.2.1 Response Procedures to Liquid Spills or Leaks

Upon the discovery of a liquid spills or leaks the employee is to take the following steps to minimize the incident:

1. Apply absorbent material to the spill.
2. Clean and dry the area where the spill occurred, and
3. Lock-out, tag-out equipment (if applicable) until proper corrections can be made.
4. Used absorbent is disposed with the refuse unless it is suspected of being a hazardous waste, in which case the material will be tested. In general, leaks from equipment are limited to oil and hydraulic fluid, which are not hazardous waste. MSDS sheets for the fluid, waste process knowledge, outside labs and other available methods will be used to make a determination of the nature of the leak.
5. The citizen drop off area does not accept roll-off boxes which typically are likely to have leaking fluids from white goods, used equipment ect.

1.3.2.2 Emergency Response to Fire

Upon discovery of a fire, no matter how small, the scale house attendant is to be notified. An Emergency Response Coordinator is to be notified and will respond to the area.

If a fire occurs, the fire department will be notified. Facility personnel are aware of the location of all fire extinguishers, hoses, and other equipment. Employees should try to contain the fire until the fire department has arrived, unless the fire is out of control and is a danger to employees. If this occurs, the facility is to be evacuated.

1.3.2.3 Arrangements with Emergency Authorities

Both the local police and fire departments are aware of the nature of the operations at the citizen drop off area.

1.3.2.4 Emergency Response Equipment

The emergency response equipment readily available on-site includes:

- Fire Extinguishers and Hoses
- Absorbent Materials
- Personal Protection Equipment

1.3.2.5 Evacuation Plan

In the event of an evacuation, an announcement will be made over the intercom system and over site radios, and employees should immediately evacuate through the nearest unobstructed exit. Scale house personnel should follow posted evacuation routes.

1.3.2.6 Emergency Coordinators

The nature of the operations enables a ~~transfer station~~ citizen drop off area employee to be on location at all operating times. These individuals have access to a telephone and are in charge of the emergency situations.

The primary individuals responsible for the coordination and evaluation of an emergency situation are listed below. Contact attempts should be made in the order listed below:

1. Ron Walker, Solid Waste Superintendent
   (727) 856-0119
2. John Power, Solid Waste Facilities Manager
   (727) 856-0119

Additionally, FDEP Solid Waste staff shall be notified. Their address and phone number is as follows:

Solid Waste Section
Florida Department of Environmental Protection
13051 North Telecom Parkway
Temple Terrace, FL 33637-0926
(813) 632-7600

1.3.2.7 Responsibilities of the Emergency Coordinator

One of the emergency coordinators is to be available at all times, either at the facility or on call. Upon notification or discovery of an emergency condition, the coordinator will evaluate the situation and notify the appropriate agencies to minimize the incident. In order to properly notify the appropriate agency, the coordinator should gather the following information (after the immediate hazard ha s been brought under control):

- Name and phone number of the coordinator
- Name and address of the facility
- Date and time of the accident
- Type of accident
- Extent of injuries, if any
- Possible hazards to health or environment outside the facility
- Agencies and names of individuals contacted

After the emergency condition has been controlled, the coordinators are responsible for investigating the incident to assess the damages, determine the cause, and decide what steps need to be taken to prevent a reoccurrence of the incident. After the incident, the coordinators are required to file follow-up reports to appropriate agencies as required by policy, permit, or law.

Clean-up operations are to commence as soon as possible to reduce the exposure to employees and properly dispose of all waste in as expedient a manner as possible. After the cleanup is complete, the coordinator must notify the appropriate state agencies prior to resuming operations.

Prior to resuming operations, all emergency equipment will be checked to ensure it is clean and ready for use. After the investigations are complete and corrective action has been identified, an emergency coordinator shall hold a meeting with the employees to train them on p roper opera ting procedures to reduce the possibility of a recurrence of the accident.

1.3.2.8 Agencies to be Notified

In the event of an emergency such as fire, large spills, sudden release of contaminated materials, or explosion, the following shall be notified immediately, if applicable:

Pasco County Fire Department	(727) 782-4987
Tampa Electric Company	(352) 567-5645
FDEP Solid Waste Staff	(813) 632-7600
IMMEDIATE EMERGENCY SERVICE	9-1-1

1.4 Record Keeping

Operational records are processed through the administrative office located at the scale house. All incoming waste loads are weighed at the scale prior to delivery to the citizen drop off area. An attendant at the scale house operates a computerized record system which generates automated logs of daily incoming waste quantities. The operational records, consisting of the quantity of waste received and transported, and the origin of the waste, are compiled on a daily basis and filed at the administrative office on-site and in New Port Richey. These records are available for FDEP inspection, upon request. The files are maintained for a minimum of three years.

1.5 Maximum Waste Storage Time

Incoming collection vehicles are routed through the CDO area on a first-in, first out basis. The waste from these collection vehicles is unloaded directly into the appropriate containers. This waste is loaded in to transfer trailers and transported to the Pasco County Resource Recovery Facility as soon as each transfer trailer is filled and a driver is available. At the end of the working day, if the waste is insufficient to fill a transfer trailer, it is stored in the containers overnight. This waste is loaded onto a transfer trailer on the morning of the next workday, within 24 hours. The maximum storage time for any waste at the facility is seven (7) days.

1.6 Vector/Odor Control

Control of odors is maintained by limiting the amount of waste stored on-site. Site roads are periodically maintained for site cleanliness with street sweepers and manual collection of debris on a daily basis as needed. The combination of large building openings and large floor openings aids in producing natural air movement in the waste unloading area. The effect is a continual dilution of any offensive odors. The grounds are continually monitored for loose litter that is removed immediately (within 24 hours) if found. Odor inspections are conducted twice in a day and a log is kept at the facility. In the event an odor is detected, the County sprays the box and area surrounding the box with disinfectant, and removes the box

and waste causing the odor from the CDO and delivers it to the appropriate disposal area. ~~and vents the area using an exhaust fan. County practices constant load in g of waste combined with frequent cleaning and disinfecting the area to control odor. The waste transferred through this facility is handled on a first in, first out basis.~~

1.7 Facility Closure

Closure of the ~~facility~~ CDO is not anticipated anytime in the near future. However, should Pasco County decide to formally close the ~~facility~~ CDO, the County will notify the Department in writing and specify a closing date. No waste will be accepted at the ~~facility~~ CDO after the specified dosing date.

The closure procedure for the CDO are ~~consists of the following~~:

- ~~Transfer authorized waste to loading areas for removal off site. Clean the recently used empty containers at unloading areas with on-site water and collect leachate with existing drain system. Record waste quantity transferred before shut down.~~
- Remove all containers, waste and/or recyclables from CDO to the tipping floor at the West Pasco Solid Waste & Resource Recovery Facility, or other appropriate disposal or processing location.
- If indications of leachate are discovered in CDO during closure refer to Section 1.3.2.4 Response Procedures to Liquid Spills or Leaks for proper course of action.
- ~~Wash down all areas, which drain to the leachate collection system with existing hoses. Record leachate and sludge volumes~~.
- Lockout and tag-out ~~the facility~~ facilities, buildings, and equipment associated with CDO operation.

~~Within 30 days after receiving the final solid waste shipment, Pasco County will remove and dispose of all solid waste a d residue at the Pasco County Resource Recovery Facility or other app roved disposal location. Any putresible waste will be removed within 48 hours. Closure will be completed within 180 days of receiving the final waste shipment. Closure will include removal of all recyclables from the site within 30 days of receiving the final waste delivery. Once closure is completed, Pasco County will certify to the Department that closure is complete.~~

Attachment G
Notice of Application

No Changes since previously submitted.

Attachment H
Environmental Resource Permit

No Changes since previously submitted

Attachment I
Citizen Drop Off Layout

Replace existing layout.

Attachment I - Storage Areas

Bulkly Household Items

MSW

Blue Bag & Recyclables

FIELD LOCATE AND CONECT TO EXISTING 6" PVC LEACHATE FORCE MAIN WITH TAPPING SADDLE, CORPORATION STOP, AND BRASS NIPPLE

SEE PLUMBING DRAWINGS FOR UTILITY CONNECTIONS AT BUILDING

2" SCH 80 PVC SANITARY SEWER LINE

2" TEE INV. 44.5 N 1468112.07 E 316913.44

90° BEND INV. 44.5 N 1468073.97 E 316913.44

N 1468106.82 E 317000.24

N 1468088.05 E 316970.00

N 1468071.17 E 316981.42

N 1468063.97 E 316955.03

22.5° BEND INV. 44.5

STRIPE AND SIGN PARKING AREA PER FDOT INDEX 17346

1-1/2" SCH 80 PVC WATER LINE

MSW CANOPY N 1467993.18 E 317043.05

CONCRETE TO ASPHALT TRANSITION 3213-250

MATCHLINE SEE DWG 05-C-102 FOR CONTINUATION

N 1467960.33 E 317010.96

ASPHALT PAVEMENT 3212-210

N 1467947.53 E 317035.88

N 1468106.83 E 317037.55

N 1468120.70 E 317223.11

N 1468123.23 E 317048.55

POND 4

POND 4 BOTTOM CONTOUR EL 47

ATTENDANT BUILDING WITH GARAGE

N 1468089.94 E 317010.95

PROPOSED CDO

HAUL ROAD

CONTRACTION JOINT, TYP

CONCRETE PAVEMENT 3213-240

N 1467939.53 E 317222.97

POND 3

36'

CONTRACTOR TO COORDINATE THE RELOCATION OF ELECTRIC POLE AND LINE WITH ELECTRIC COMPANY

CONTRACTOR TO COORDINATE THE RELOCATION OF ELECTRIC POLE AND LINE WITH ELECTRIC COMPANY

STATIONARY COMPACTOR AND OPEN TOP BOX BAYS, TYP

6' HIGH CHAIN LINK FENCE 3231-410

OVERFLOW WEIR N 1467893.53 E 317222.97

PROPOSED CDO AREA - ALTERNATE BID ITEM (INSIDE DASHED LINE)

N 1468116.83 E 317437.73

N 1468120.23 E 317418.56

N 1468123.23 E 317417.69

N 1468127.41 E 317430.50

RAINSHIELD SLAB 3213-240

STOP SIGN

MATCH EXISTING PAVEMENT 3212-215

N 1468157.23 E 317552.84

N 1468156.93 E 317698.58

R 25'

N 1468132.33 E 317673.52

STOP SIGN MOUNTED TO WALL

PUSH WALLS, SEE STRUCTURAL DRAWINGS

N 1468106.83 E 317552.78

CONTRACTOR TO COORDINATE THE RELOCATION OF ELECTRIC

NEW CANOPY

N 1468010.33 E 317573.52

EXISTING FENCE TO BE REMOVED, TYP.

CONCRETE TO ASPHALT TRANSITION 3213-250

RETAINING WALL. SEE STRUCTURAL DRAWINGS.

POND 3 BOTTOM CONTOUR EL 41

NOTE: SEE GRADING, DRAINAGE, AND EROSION CONTROL PLANS FOR POND GRADING

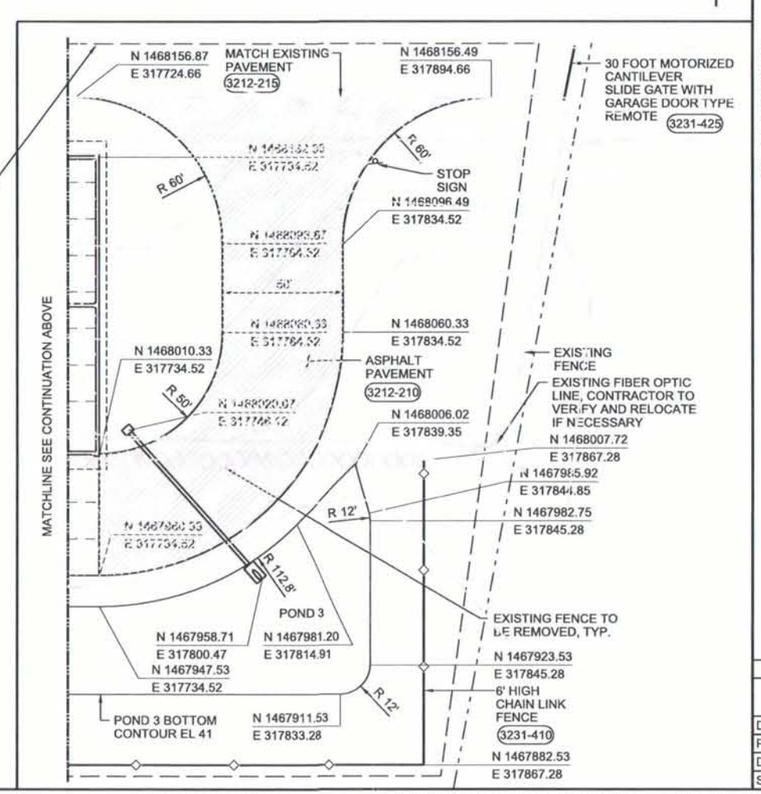

NO.	DATE	DSGN	DR	CHK	APVD
1	9/20/10	R MORRISON	RM	BY	APVD
2	12/15/10	R MORRISON	RB	C KOHLER	R MORRISON

1 FDEP REVIEW COMMENTS
2 FDEP REVIEW COMMENTS

CH2MHILL
3011 SW WILLISTON RD
GAINESVILLE, FLORIDA 32608
EB00000072 AAC001992

SOLID WASTE SYSTEM
UPGRADE DESIGN
PASCO COUNTY
PASCO COUNTY, FLORIDA

CIVIL
WEST PASCO SITE
SITE LAYOUT AND UTILITIES PLAN

VERIFY SCALE
BAR IS ONE INCH ON ORIGINAL DRAWING.
0 1"

DATE	NOVEMBER 2010
PROJ	378217
DWG	05-C-104
SHEET	

REUSE OF DOCUMENTS: THIS DOCUMENT, AND THE IDEAS AND DESIGNS INCORPORATED HEREIN, AS AN INSTRUMENT OF PROFESSIONAL SERVICE, IS THE PROPERTY OF CH2M HILL AND IS NOT TO BE USED, IN WHOLE OR IN PART, FOR ANY OTHER PROJECT WITHOUT THE WRITTEN AUTHORIZATION OF CH2MHILL.
©CH2M HILL 2010. ALL RIGHTS RESERVED.

PRELIMINARY BID DOCUMENTS

CONTRACT DOCUMENTS
For the Construction of

PASCO COUNTY
SOLID WASTE UPGRADE
PASCO COUNTY, FLORIDA

WEST PASCO COUNTY PERMIT DOCUMENTS

DRAWINGS

VOLUME 4 OF 4

FLORIDA DEPARTMENT OF
ENVIRONMENTAL PROTECTION
FEB 07 2011
SOUTHWEST DISTRICT
TAMPA

For Information regarding this project contact:
Rufus J Bruner, III, PE
3011 SW Williston Rd
Gainesville, Fl 32608

CH2MHILL
3011 SW WILLISTON RD
GAINESVILLE, FLORIDA 32608
STATE OF FLORIDA
ARCHITECTURAL BUSINESS NO. AA001992
ENGINEERING BUSINESS NO. EB0000072

CH2M HILL Project No. 378217

FEBRUARY 2011

FILE

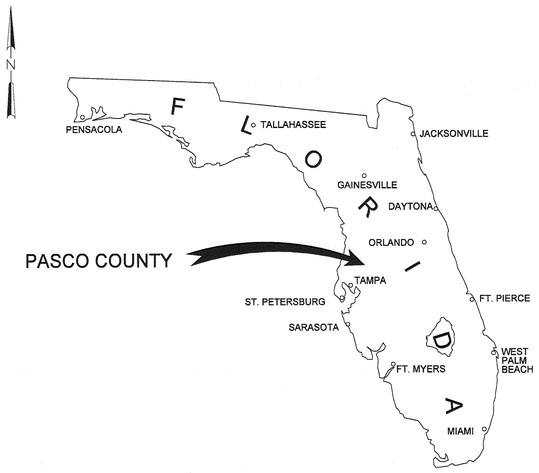

VICINITY MAP
NTS

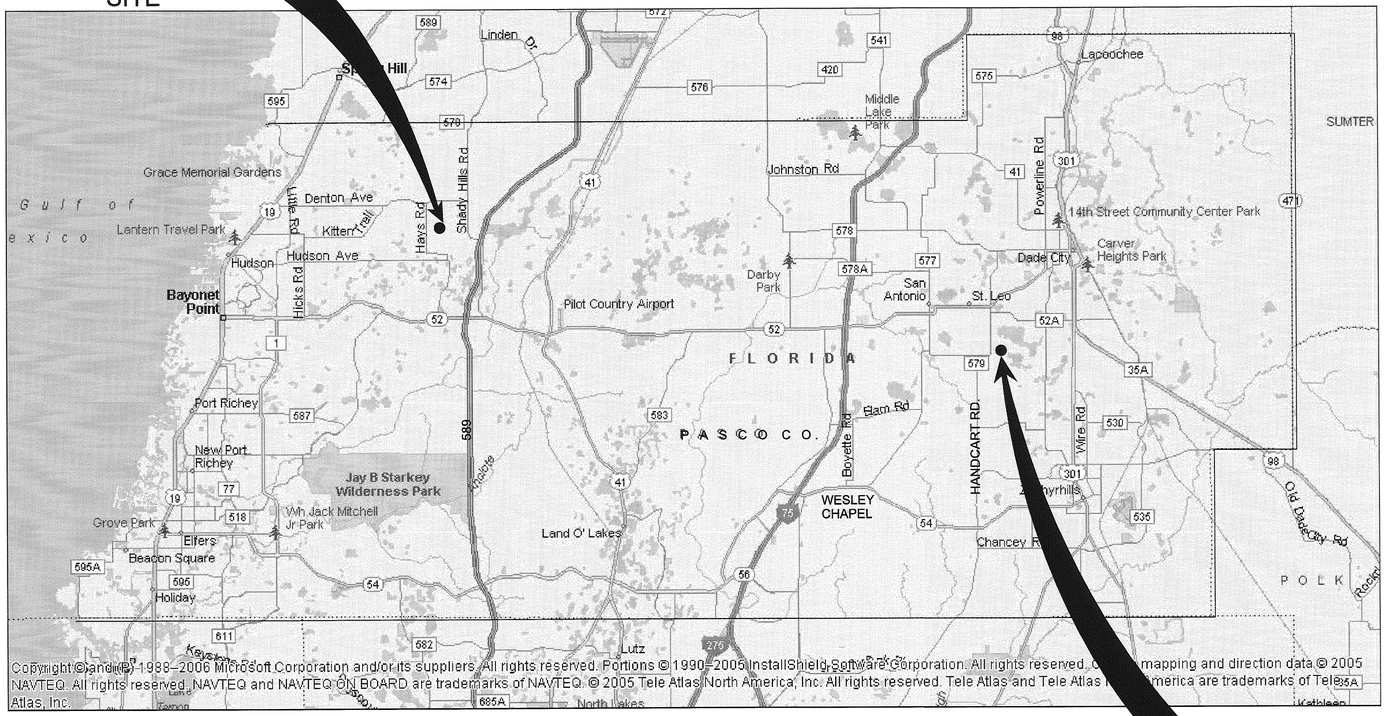

Copyright © and (P) 1988–2006 Microsoft Corporation and/or its suppliers. All rights reserved. Portions © 1990–2005 InstallShield Software Corporation. All rights reserved. Certain mapping and direction data © 2005 NAVTEQ. All rights reserved. NAVTEQ and NAVTEQ ON BOARD are trademarks of NAVTEQ. © 2005 Tele Atlas North America, Inc. All rights reserved. Tele Atlas and Tele Atlas North America are trademarks of Tele Atlas, Inc.

LOCATION MAP
NTS

INDEX OF DRAWINGS

00 - GENERAL

00-G-001 COVER SHEET
00-G-002 INDEX TO DRAWINGS AND SITE LOCATION MAP
00-G-003 ABBREVIATIONS - SHEET 1
00-G-003A ABBREVIATIONS - SHEET 2
00-G-004 CIVIL NOTES AND LEGEND
00-G-005 STRUCTURAL GENERAL NOTES
00-G-006 ARCHITECTURAL LEGEND AND GENERAL NOTES
00-G-007 MECHANICAL LEGEND
00-G-008 ELECTRICAL LEGEND - SHEET 1
00-G-009 ELECTRICAL LEGEND - SHEET 2
00-G-010 INSTRUMENTATION AND CONTROL - LEGEND 1
00-G-011 INSTRUMENTATION AND CONTROL - LEGEND 2

05 - WEST PASCO - SITE

05-C-101 WEST PASCO SITE - GENERAL SITE LAYOUT
05-C-102 WEST PASCO SITE - SITE LAYOUT AND UTILITIES PLAN
05-C-103 WEST PASCO SITE - SITE LAYOUT AND UTILITIES PLAN
05-C-104 WEST PASCO SITE - SITE LAYOUT AND UTILITIES PLAN
05-C-105 WEST PASCO SITE - GRADING, DRAINAGE, AND EROSION CONTROL PLAN
05-C-106 WEST PASCO SITE - GRADING, DRAINAGE, AND EROSION CONTROL PLAN
05-C-501 WEST PASCO SITE - SECTIONS
05-C-502 WEST PASCO SITE - SECTIONS
05-C-503 WEST PASCO SITE - DETAILS
05-C-504 WEST PASCO SITE - DETAILS
05-E-101 WEST PASCO SITE - OVERALL ELECTRICAL SITE PLAN
05-E-301 WEST PASCO SITE - DUCTBANK SECTIONS

10 - WEST PASCO - SCALEHOUSE

10-S-101 WEST PASCO SITE - SC ALEHOUSE CANOPY AND SITE FOUNDATION
10-S-301 WEST PASCO SITE - SCALEHOUSE SECTIONS AND DETAILS
10-A-101 WEST PASCO SITE - SCALEHOUSE FLOOR PLAN AND CODE INFORMATION
10-A-102 WEST PASCO SITE - SCALEHOUSE FLOOR PLAN, ROOF PLAN, AND REFLECTED CEILING PLAN
10-A-103 WEST PASCO SITE - SCALEHOUSE CANOPY FLOOR \ ROOF PLAN AND DETAIL
10-A-201 WEST PASCO SITE - SCALEHOUSE ELEVATIONS
10-A-501 WEST PASCO SITE - SCALEHOUSE MILLWORK AND DETAILS
10-M-101 WEST PASCO SITE - SCALEHOUSE PLAN
10-M-601 WEST PASCO SITE - SCALEHOUSE EQUIPMENT SCHEDULES
10-P-101 WEST PASCO SITE - SCALEHOUSE PLAN
10-P-102 WEST PASCO SITE - SCALEHOUSE RISER AND DETAILS
10-E-101 WEST PASCO SITE - SCALEHOUSE AND CANOPY LIGHTING PLAN
10-E-102 WEST PASCO SITE - SCALEHOUSE POWER PLAN
10-E-103 WEST PASCO SITE - SCALEHOUSE PROCESS PLAN
10-E-104 WEST PASCO SITE - SCALEHOUSE GROUNDING PLAN
10-E-401 WEST PASCO SITE - SCALEHOUSE ENLARGED PLANS
10-E-501 WEST PASCO SITE - SCALEHOUSE DETAILS AND SECTIONS
10-E-601 WEST PASCO SITE - POWER DIAGRAM AND SCHEDULES
10-E-602 WEST PASCO SITE - RISER DIAGRAMS

30- WEST PASCO - CITIZEN DROP OFF

30-S-101 WEST PASCO SITE - CITIZEN DROP OFF AREA - FOUNDATION PLAN
30-S-102 WEST PASCO SITE - CITIZEN DROP OFF AREA - CANOPY ROOF PLAN
30-S-301 WEST PASCO SITE - CITIZEN DROP OFF AREA - SECTIONS AND DETAILS
30-S-302 WEST PASCO SITE - CITIZEN DROP OFF AREA - SECTIONS AND DETAILS
30-A-101 WEST PASCO SITE - CITIZEN DROP OFF AREA - ATTENDANT BUILDING LIFE SAFETY AND FLOOR PLAN
30-A-102 WEST PASCO SITE - CITIZEN DROP OFF AREA - CANOPY ROOF PLANS
30-A-201 WEST PASCO SITE - CITIZEN DROP OFF AREA - ATTENDANT BUILDING ELEVATIONS
30-M-101 WEST PASCO SITE - CITIZEN DROP OFF AREA - PLAN
30-P-101 WEST PASCO SITE - CITIZEN DROP OFF AREA - ATTENDANT BUILDING FLOOR PLAN
30-E-101 WEST PASCO SITE - CITIZEN DROP OFF AREA - LIGHTING PLAN
30-E-102 WEST PASCO SITE - CITIZEN DROP OFF AREA - POWER PLAN
30-E-103 WEST PASCO SITE - CITIZEN DROP OFF AREA - POWER PLAN
30-E-104 WEST PASCO SITE - CITIZEN DROP OFF AREA - ATTENDANT BUILDING - POWER AND LIGHTING PLAN
30-E-301 WEST PASCO SITE - DUCTBANK SECTIONS
30-E-401 WEST PASCO SITE - CITIZEN DROP OFF ENLARGED PLANS
30-E-501 WEST PASCO SITE - CITIZEN DROP OFF AREA - DETAILS
30-E-601 WEST PASCO SITE - CITIZEN DROP OFF AREA - DIAGRAMS

50 - WEST PASCO - OLD SCALE HOUSE RENOVATION

50-A-101 WEST PASCO SITE - OLD SCALEHOUSE RENOVATION DEMOLITION PLAN
50-A-102 WEST PASCO SITE - OLD SCALE HOUSE RENOVATION - NEW CONSTRUCTION

90 - WEST PASCO - INSTRUMENTATION & CONTROL

90-D-101 WEST PASCO SITE - SCALE SYSTEM - BLOCK DIAGRAM
90-D-102 WEST PASCO SITE - SITE CAMERA COVERAGE
90-D-103 WEST PASCO SITE - CDC CCTV LAYOUT
90-D-104 WEST PASCO SITE - CONTROL SYSTEM - BLOCK DIAGRAM
90-D-105 WEST PASCO SITE - FIGURES

FLORIDA DEPARTMENT OF ENVIRONMENTAL PROTECTION
FEB 07 2011
SOUTHWEST DISTRICT TAMPA

NO	DATE	DESCRIPTION	APVR	N
NO.	DATE	REVISION	BY	APVD
DSGN	R BRUNER	DR K RINER	CHK KR CHANG	APVD R BRUNER

CH2MHILL
3011 SW WILLISTON RD
GAINESVILLE, FLORIDA 32608
EB0000072 AAC001992
Rufus J Bruner, III PE 35951

SOLID WASTE SYSTEM
UPGRADE DESIGN
PASCO COUNTY
PASCO COUNTY, FLORIDA

GENERAL
INDEX TO DRAWINGS AND SITE LOCATION MAP

VERIFY SCALE
BAR IS ONE INCH ON ORIGINAL DRAWING.
0 1"

DATE	FEBRUARY 2011
PROJ	378217
DWG	00-G-002
SHEET	

REUSE OF DOCUMENTS: THIS DOCUMENT, AND THE IDEAS AND DESIGNS INCORPORATED HEREIN, AS AN INSTRUMENT OF PROFESSIONAL SERVICE, IS THE PROPERTY OF CH2M HILL AND IS NOT TO BE USED, IN WHOLE OR IN PART, FOR ANY OTHER PROJECT WITHOUT THE WRITTEN AUTHORIZATION OF CH2MHILL.
© CH2M HILL 2010. ALL RIGHTS RESERVED.

PERMITTING SUBMITTAL

ABBREVIATIONS

A	AMMETER, AMPERES, AWNINGS
AB	ANCHOR BOLT, ABOVE
ABDN	ABANDON
AC	ACOUSTICAL, ACOUSTICAL CEILING
AC	ALTERNATING CURRENT
AC	ASPHALTIC CONCRETE
ACFL	ACCESS FLOORING
ACI	AMERICAN CONCRETE INSTITUTE
ACMU	ACOUSTICAL CONCRETE MASONRY UNIT, ACOUSTICAL CMU
ACP	ACOUSTICAL PANELS
ACST	ACOUSTICAL
ACT	ACOUSTICAL TILE
AD	AREA DRAIN
ADDL	ADDITIONAL
ADJ	ADJACENT
ADW	DRY WEATHER AVERAGE
AFD	ADJUSTABLE FREQUENCY DRIVE
AFF	ABOVE FINISHED FLOOR
AFG	ABOVE FINISHED GRADE
AG	ACOUSTICAL, ACOUSTICAL GLASS
AGGR	AGGREGATE
AHR	ANCHOR
AISC	AMERICAN INSTITUTE OF STEEL CONSTRUCTION
AJ	ADJUSTABLE
AL	ALUMINUM
ALKY	ALKALINITY
ALTN	ALTERNATE
AM	AUTO-MANUAL
AMRD	ACOUSTICAL METAL ROOF DECKING
ANDZ	ANODIZE
APPROX	APPROXIMATE
APVD	APPROVED
ARCH	ARCHITECTURAL
AR	ANALOG RELAY
AS	AS SELECTED
ATS	AUTOMATIC TRANSFER SWITCH
AUTO	AUTOMATIC
AUX	AUXILIARY
AVG	AVERAGE
AWW	WET WEATHER AVERAGE
@	AT
B	BELL
BAL	BALANCE
BETW	BETWEEN
BF	BLIND FLANGE, BOTTOM FACE
BFV	BUTTERFLY VALVE
BL	BASELINE
BFP	BACKFLOW PREVENTER
BLDG	BUILDING
BLK	BLOCK
BM	BEAM, BENCHMARK
BO	BOTTOM OF
B.O.B.	BOTTOM OF BEAM
BOD	BOTTOM OF DUCT
BOP	BOTTOM OF PIPE
BOT	BOTTOM
BRG	BEARING
BRK	BRICK
BRKR	BREAKER
BSP	BLACK STEEL PIPE
BV	BALL VALVE, BLOCK VENT
BVC	BEGINNING OF VERTICAL CURVE
C	CONDUIT, CASEMENT
°C	DEGREE CELSIUS
C TO C	CENTER TO CENTER
CAB	CABINET
CB	CATCH BASIN, CIRCUIT BREAKER
CC	CENTER OF CIRCLE
CC	CONTROL CABLE
CCP	CENTRAL CONTROL PANEL
CCS	CENTRAL CONTROL SYSTEM
CDF	CONTROLLED DENSITY FILL
CE	CONSTRUCTION ENTRANCE
CFM	CUBIC FEET PER MINUTE
CFS	CUBIC FEET PER SECOND
CHEM	CHEMICAL
CHKD	CHECKERED
CI	CAST IRON
CIP	CAST IRON PIPE, CAST IN PLACE
CIP	CULVERT INLET PROTECTION
CISP	CAST IRON SOIL PIPE
CJ	CONSTRUCTION JOINT
CKT	CIRCUIT
CL	CENTERLINE
CLDI	CEMENT LINED DUCTILE IRON
CLFS	CONTROLLED LOW STRENGTH FILL
CLG	CEILING
CLR	CLEAR, CLEARANCE
CMP	CENTRAL MONITORING PANEL
CMP	CORRUGATED METAL PIPE
CMU	CONCRETE MASONRY UNIT
CNTR	COUNTER
CO	CLEANOUT, CARBON MONOXIDE
COL	COLUMN, COLOR
CONC	CONCRETE
COND	CONDENSATE
CONDTN	CONDITIONED
CONN	CONNECTION
CONSTR	CONSTRUCTION
CONT	CONTINUED, CONTINUOUS, CONTINUATION
CONTR	CONTRACTOR
COORD	COORDINATE
COP	COPPER
CP	CENTER PIVOT
CP-X	CONTROL PANEL NO. X
CPLG	COUPLING
CPRSR	COMPRESSOR
CPT	CONTROL POWER TRANFORMER, CARPET
CPVC	CHLORINATED PVC
CR	CONTROL RELAY
CRS	COLD ROLLED STEEL
CRS	CONSTRUCTION ROAD STABILIZATION
CT	CERAMIC TILE
CT	CURRENT TRANSFORMER
CTC	COMPUTER TERMINAL CABINET
CTR	CENTER
CTRD	CENTERED
CTSK	COUNTERSUNK
CU	CUBIC
CU FT	CUBIC FOOT
CU IN	CUBIC INCH
CUH	COPPER TUBING, HARD DRAWN
CV	CHECK VALVE
CWR	CABINET DOOR MOUNTED WASTE RECEPTACLE
CY, CU YD	CUBIC YARD
CWS	CLEAN WATER SERVICES
D	DEEP, DRAIN
d	PENNY NAIL SIZE
DA	DUAL ACTION
DAS	DATA ACQUISTION SYSTEM
DBA	DEFORMED BAR ANCHOR
DBL	DOUBLE
DC	DIRECT CURRENT
DEG	DEGREE
DET	DETAIL
DF	DOUGLAS FIR, DRINKING FOUNTAIN
DDI	DROP INLET
DH	DOUBLE HUNG
DI	DUCTILE IRON
DIA	DIAMETER
DIAG	DIAGONAL
DIP	DUCTILE IRON PIPE
DIR	DIRECTION
DISCH	DISCHARGE
DN	DOWN
DO	DISSOLVED OXYGEN
DOL	DIRECT-ON-LINE
DP, DPNL	DISTRIBUTION PANEL
DR	DOOR
DS	DOWNSPOUT
DWG	DRAWING
DWL	DOWEL
△	DELTA
E	EAST, EMPTY
EA	EACH, EXHAUST AIR
EB, EBCT	EMPTY BED CONTACT TIME
ECC	ECCENTRIC
EE	EMERGENCY EYEWASH
EDF	EGG-SHAPED DIGESTER FACILITY
EF	EACH FACE, EXHAUST FAN
EFF	EFFICIENCY, EFFICIENT
EFL	EFFLUENT
EIFS	EXTERIOR INSULATION AND FINISH SYSTEM
EL	ELEVATION
ELB	ELBOW
ELC	ELECTRICAL LOAD CENTER
ELEC	ELECTRIC, ELECTRICAL
ENGR	ENGINEER
EOP	EDGE OF PAVEMENT
ESC	EROSION AND SEDIMENT CONTROL
EP	EXPLOSION PROOF, EDGE OF PAVING
EQL	EQUAL
EQL SP	EQUALLY SPACED
EQPT	EQUIPMENT
ESC	EROSION AND SEDIMENT CONTROL
ETM	ELAPSED TIME METER
EVC	END OF VERTICAL CURVE
EW	EACH WAY
EWC	ELECTRIC WATER COOLER
EXH	EXHAUST
EXP	EXPANSION, EXPOSED
EXP AB	EXPANSION ANCHOR BOLT
EXP JT	EXPANSION JOINT
EXST, EXIST	EXISTING
EXT	EXTERIOR
°F	DEGREE FAHRENHEIT
FB	FLAT BAR
F, FU	FUSE
F, FX	FIXED
FAP	FIRE ALARM PANEL
FC	FLEXIBLE CONDUIT
FCA	FLANGED COUPLING ADAPTER
FCL2	FREE CHLORINE RESIDUAL
FCO	FLOOR CLEANOUT
FCTY	FACTORY
FD	FLOOR DRAIN
FDN	FOUNDATION
FDR	FEEDER
FEXT	FIRE EXTINGUISHER
FF	FINISHED FLOOR
FG	FINISH GRADE, FLOAT GLASS
FH	FLAT HEAD
FHY	FIRE HYDRANT
FIG	FIGURE
FL	FLOW LINE
FLG	FLANGE
FL	FLOOR
FLEX	FLEXIBLE
FLH	FLAT HEAD
FLTR	FILTER
FLUOR	FLUORESCENT
FNSH	FINISH
FOB	FLAT ON BOTTOM
FOT	FLAT ON TOP
FP	FIELD PANEL
FPM	FEET PER MINUTE
FR	FORWARD REVERSE
FRP	FIBERGLASS REINFORCED PLASTIC
FSHS	FOLDING SHOWER SEAT
FT	FOOT OR FEET
FTG	FOOTING
FU	FIXTURE UNIT
FVNR	FULL VOLTAGE NON-REVERSING
FVR	FULL VOLTAGE REVERSING
FWD	FORWARD
G, GND	GROUND
GA	GAUGE
GAL	GALLON
GALV	GALVANIZED
GB	GYPSUM BOARD
GC	GROOVED COUPLING
GCMU	GLAZED CONCRETE MASONRY UNITS
GFA	GROOVED FLANGE ADAPTER
GFI	GROUND FAULT INTERRUPTER
GFR	GROUND FAULT RELAY
GH	GREENHOUSE
GL	GLASS
GPD	GALLONS PER DAY
GPH	GALLONS PER HOUR
GPM	GALLONS PER MINUTE
GPS	GLOBAL POSITION SYSTEM
GRTG	GRATING
GSB	GYPSUM SOFFIT BOARD
GSP	GALVANIZED STEEL PIPE
GV	GATE VALVE
GVL	GRAVEL
GWB	GYPSUM WALLBOARD
GYP	GYPSUM
H	HIGH, HORN OR HOWLER
H2S	HYDROGEN SULFIDE
H.A.S.	HEADED ANCHOR STUD
HC	HOLLOW CORE WOOD
HCL	HYDROCHLORIC ACID
HDNR	HARDENER
HDNS	HARDNESS
HDR	HEADER
HDW	HARDWARE
HGL	HYDRAULIC GRADE LINE
HK	HOOK
HGT	HEIGHT
HH	HANDHOLE
HID	HIGH INTENSITY DISCHARGE
HK	HOOK
HM	HOLLOW METAL
HOA	HAND-OFF-AUTO
HOR	HAND-OFF-REMOTE
HORIZ	HORIZONTAL
HP	HORSEPOWER
HPT	HIGH POINT
HPU	HYDRAULIC POWER UNIT
HR	HOSE RACK, HANDRAIL
HV	HOSE VALVE
HVAC	HEATING, VENTILATING AND AIR CONDITIONING
HWL	HIGH WATER LEVEL
IC	INTERRUPTING CAPACITY
ID	INDUCED DRAFT, INSIDE DIAMETER
IE	INVERT ELEVATION
I.F.	INSIDE FACE
IG	INSULATING, INSULATING GLASS
IN	INCH
INCAND	INCANDESCENT
INFL	INFLUENT
INJS	INJECTIONS
INST	INSTANTANEOUS
INSTM	INSTRUMENT, INSTRUMENTATION
INSUL	INSULATION
INVT	INVERT
IP	INLET PROTECTION, INSTRUMENTATION PANEL
IRRIG	IRRIGATION
ITG	INSULATED TEMPERED GLASS
ITX	ISOLATION TRANSFORMER
IU	INTAKE UNIT
IW	IRRIGATION WELL
J	JALOUSIE
JA	JAL-AWNING
JB	JUNCTION BOX
JAN	JANITOR
JCT	JUNCTION
JT	JOINT
K	KEY GROUP, KEY INTERLOCK
KIP	THOUSAND POUNDS
KIT	KITCHEN
K-PL	KICKPLATE
KSK	KITCHEN SINK
KV	KILOVOLTS
KVA	KILOVOLT AMPERES
KVAR	KILOVOLT AMPERES REACTIVE
KW	KILOWATT
L	ANGLE, LENGTH
LA	LIGHTNING ARRESTER
LAB	LABORATORY
LAM	LAMINATE
LAT	LATITUDE
LB	POUND
LC	LIGHTING CONTACTOR
LD	COMBINATION LOUVER/DAMPER
LDG	LOADING DOCK
LEL	LOWER EXPLOSIVE LIMIT
LF	LINEAR FEET
LG	LONG
LH	LEFT HAND
LHR	LEFT HAND REVERSE
LLH	LONG LEG HORIZONTAL
LLV	LONG LEG VERTICAL
LNTL	LINTEL
LONG	LONGITUDINAL
LOS	LOCK-OUT STOP PUSHBUTTON
LP	LIGHT POLE, LIGHTING PANEL, LOCAL PANEL
LPT	LOW POINT
LR	LATCHING RELAY
LR	LOCAL-REMOTE
LR	LONG RADIUS
LS	LABORATORY SINK
LT	LEFT
LTG, LTS	LIGHTS OR LIGHTING
LTX	LIGHTING TRANSFORMER
LWL	LOW WATER LEVEL
MA	MANUAL-AUTO
MAS	MASONRY
MATL	MATERIAL
MAX	MAXIMUM
MB	MACHINE BOLT
MC	MASONRY CLEARANCE
MC	MODULATE-CLOSE
MCC	MOTOR CONTROL CENTER
MCJ	MASONRY CONTROL JOINT
MDO	MEDIUM DENSITY OVERLAY
MECH	MECHANICAL
MFD	MANUFACTURED
MFR	MANUFACTURER
MGD	MILLION GALLONS PER DAY
MH	MANHOLE, MOUNTING HEIGHT
MIN	MINUMUM
MISC	MISCELLANEOUS
MJ	MECHANICAL JOINT
MLO	MAIN LUGS ONLY
MMDW	DRY WEATHER MAXIMUM MONTH
MMP	MECHANICAL MOUNTING PANEL
MMWW	WET WEATHER MAXIMUM MONTH
MO	MANUAL OPERABLE, MASONRY OPENING
MP	METAL PANEL
MPU	MULTIPURPOSE UNIT
MS	MANUFACTURER'S STANDARD
MSC	MANUFACTURER SUPPLIED CABLE
MSR	GROUPED MOTOR CONTROL
MT	MOUNT
MTD	MOUNTED
MTG	MOUNTING
MTS	MANUAL TRANSFER SWITCH
MTS	MILL TYPE STEEL PIPE
MU	MULCHING
MV	MERCURY VAPOR
MWS	MAXIMUM WATER SURFACE
N	NORTH, NEUTRAL
NA	NOT APPLICABLE
NA	NON-AUTOMATIC
NC	NORMALLY CLOSED
NEUT	NEUTRAL
NG	NATURAL GAS
NGVD	NATIONAL GEODETIC VERTICAL DATUM
NIC	NOT IN CONTRACT
N.O.	NORMALLY OPEN
NO., #	NUMBER
NOM	NOMINAL
NP	NON-PROTECTED
NPT	NATIONAL PIPE THREADS
NS	NON-SHRINK
NTS	NOT TO SCALE
O2	OXYGEN
O TO O	OUT TO OUT
OA	OVERALL, ODOROUS AIR
OC	ON CENTER
OC	OPEN-CLOSE (O)
OCA	OPEN-CLOSE-AUTO
OCR	OPEN-CLOSE-REMOTE
OD	OUTSIDE DIAMETER, OVERFLOW DRAIN
O.F.	OUTSIDE FACE
OFCI	OWNER FURNISHED, CONTRACTOR INSTALLED
OFOI	OWNER FURNISHED, OWNER INSTALLED
OL	OVERLOAD RELAY
OO	ON-OFF
OOA	ON-OFF-AUTO
OOR	ON-OFF-REMOTE
OP	OPAQUE PANEL, OUTLET PROTECTION
OPER	OPERATOR
OPNG	OPENING
OPP	OPPOSITE
OSA	OUTSIDE AIR
OSC	OPEN-STOP-CLOSE
OSD	OPEN SITE DRAIN
OWSJ	OPEN WEB STEEL JOIST
OZ	OUNCE
P	PROJECTED
P	PILASTER, PIPE
PAVT	PAVER TILE
PB	PUSHBUTTON SWITCH
PC	POINT OF CURVE, PHOTOCELL
PC	PRECAST CONCRETE PANEL
PCCP	PRECAST CONCRETE CYLINDER PIPE
PCV	PRESSURE CONTROL VALVE
PE	PLAIN END
PED	PEDESTAL, PEDESTRIAN
PEP	POLYETHYLENE PIPE
PEN.	PENETRATION
PFC	POUNDS PER CUBIC FOOT
PH	PENTHOUSE
pH	HYDROGEN ION CONCENTRATION
PH	PHASE
PI	POINT OF INTERSECTION
PIT	PILOT TUBE TEST STATION
PJF	PREMOULDED JOINT FILLER
PL	PLATE (STEEL)
PL	PROPERTY LINE
PLAM	PLASTIC LAMINATE
PLAS	PLASTER, PLASTIC
PLC	PROGRAMMABLE LOGIC CONTROLLER
PLYWD	PLYWOOD
PNL	PANEL
PP	POWER POLE
P-P	PUSH-PULL
PPL	POLYPROPYLENE LINED
PR	PAIR
PRC	POINT OF REVERSE CURVE
PRCST	PRECAST
PREFAB	PREFABRICATION
PRES	PRESSURE
PRI	PRIMARY
PRM	PERMANENT REFERENCED MARKER
PROJ	PROJECTION
PROP	PROPERTY
PS	PLASTIC SHEET, POLYCARBONATE SHEET
PS	PAINT SYSTEM
PSF	POUNDS PER SQUARE FOOT
PSI	POUNDS PER SQUARE INCH
PSIG	POUNDS PER SQUARE INCH, GAUGE
PT	POINT OF TANGENCY
PT	POTENTIAL TRANSFORMER
PT	PRESSURE TREATED
PTD	PAPER TOWEL DISPENSER
PTN	PARTITION
PV	PLUG VALVE
PVC	POLYVINYL CHLORIDE
PVI	POINT OF VERTICAL INTERSECTION
PVMT	PAVEMENT
PVT	POINT OF VERTICAL TANGENCY
QAA	AVERAGE FLOW
QMM	MAXIMUM 30 DAY FLOW
QPI	PEAK INSTANTANEOUS FLOW
QPP	PEAK PUMPING FLOW
QT	QUARRY TILE
R	RISER
R OR RAD	RADIUS
RA	RETURN AIR
RC	REINFORCED CONCRETE
RCP	REINFORCED CONCRETE PIPE
RCPT	RECEPTACLE
RD	ROAD, ROOF DRAIN
RDCR	REDUCER
RDW	REDWOOD
RECIR	RECIRCULATION
REF	REFER OR REFERENCE
REFR	REFRIGERATE, REFRIGERANT
REINF	REINFORCED, REINFORCING, REINFORCE
REQD	REQUIRED
RESIL	RESILIENT
RFS	ROLL-UP FIRE SHUTTER
RH	RIGHT HAND
RH	RODHOLE
RHR	RIGHT HAND REVERSE
RL	RAIN LEADER
RLS	RUBBER LINED STEEL
RM	ROOM
RO	ROUGH OPENING
ROL	RAISE-OFF-LOWER
RPM	REVOLUTIONS PER MINUTE
RR	RIPRAP

NOTES:

1. CONTACT ENGINEER FOR ABBREVIATIONS USED BUT NOT SHOWN ON THIS DRAWING.

FLORIDA DEPARTMENT OF ENVIRONMENTAL PROTECTION
FEB 07 2011
SOUTHWEST DISTRICT TAMPA

GENERAL ABBREVIATIONS

GENERAL NOTE:

1. THIS IS A STANDARD LEGEND SHEET. THEREFORE, NOT ALL OF THE INFORMATION SHOWN MAY BE USED ON THIS PROJECT.

NDM SERVER: GNV FILENAME: dn00G003_378217.dgn PLOT DATE: 2/2/2011 PLOT TIME: 3:52:17 PM

NO	DATE	DESCRIPTION
DSGN	DATE	REVISION
R BRUNER	DR	CHK
K RINER	APVD	KR CHANG
APVR	BY	APVD
N		R BRUNER

©CH2M HILL 2010. ALL RIGHTS RESERVED.
THIS DOCUMENT, AND THE IDEAS AND DESIGNS INCORPORATED HEREIN, AS AN INSTRUMENT OF PROFESSIONAL SERVICE, IS THE PROPERTY OF CH2M HILL AND IS NOT TO BE USED, IN WHOLE OR IN PART, FOR ANY OTHER PROJECT WITHOUT THE WRITTEN AUTHORIZATION OF CH2MHILL
REUSE OF DOCUMENTS:

CH2MHILL
3011 SW WILLISTON RD
GAINESVILLE, FLORIDA 32608
EB00000072 AAC001992
Rufus J Bruner, III PE 35951

SOLID WASTE SYSTEM
UPGRADE DESIGN
PASCO COUNTY
PASCO COUNTY, FLORIDA

GENERAL
ABBREVIATIONS
SHEET 1

VERIFY SCALE
BAR IS ONE INCH ON ORIGINAL DRAWING.
0 1"

DATE	FEBRUARY 2011
PROJ	378217
DWG	00-G-003
SHEET	

PERMITTING SUBMITTAL

ABBREVIATIONS

RRUB	RADIAL RUBBER
RS	RIGID STEEL
RST	REINFORCING STEEL
RT	RIGHT
RTN	RETURN
RTO	REGENERATIVE THERMAL OXIDIZER
RUB	RUBBER
RUBC	RUBBER CUSHIONED FLOORING
RUBS	RUBBER ESD CONTROL FLOORING
R/W	RIGHT OF WAY
S	I-BEAM
S	SLOPE, SOUTH, SWITCH
SA	SUPPLY AIR
SATC	SUSPENDED ACCUSTICAL TILE CEILING
SB	SEDIMENT BASIN
SC	SHOWER CURTAIN, SOLID CORE WOOD
SCADA	SUPERVISORY CONTROL AND DATA ACQUISITION
SCC	SOLID CORE
SCFM	STANDARD CUBIC FEED PER MINUTE
SCHED	SCHEDULE
SCU	SPEED CONTROL UNIT
SDP	SUB-DISTRIBUTION PANEL
SDWK	SIDEWALK
SEC	SECONDARY
SECT	SECTION
SED	SEDIMENTATION
SEW	SEWAGE
SG	LAMINATED SAFETY GLASS, SAFETY
SGWB	SUSPENDED GYPSUM WALL BOARD
SH	SHEET
SHA	SURFACE HARDENING AGENT
SHS	SOLIDS HANDLING SYSTEM
SIM	SIMILAR
SK	SINK
SLR	SEALER
SMLS	SEAMLESS EPOXY
SOI	SPRAY- ON INSULATION
SOLN	SOLUTION
SP	SPACE OR SPACES, SPANDREL PANEL, STORMPROOF
SPEC, SPECS	SPECIFICATIONS
SPD	SUMP PUMP DISCHARGE
SPG	SPACING
SPLY	SUPPLY
SQ	SQUARE
SQ FT	SQUARE FOOT, FEET
SQ IN	SQUARE INCH
SR	SHORT RADIUS
SS	START-STOP
SST	STAINLESS STEEL
SSC	SUPERVISORY SET POINT CONTROL
ST	STORM DRAIN
ST	STRAIGHT
STA	STATUS, STATION
STD	STANDARD
STIF	STIFFENER
STIRR	STIRRUP
STL	STEEL
STRL	STRUCTUAL
STRUCT	STRUCTURE
SUBFL	SUBFLOOR
SUSP	SUSPENDED
SV	SOLENOID VALVE
SVIN	SHEET VINYL
SWBD	SWITCHBOARD
SWGR	SWITCHGEAR
SYMM	SYMMETRICAL
T	THERMOSTAT, TREAD
T&B	TOP AND BOTTOM
T&G	TONGUE AND GROOVE
TA	TRANSFER AIR
TAN	TANGENT
TB	TERMINAL BOARD
TBG	TUBING
TC	TIME TO CLOSE
TC	TURBIDITY CURTAIN
TCAD	TIME CLOSE AFTER DE-ENERGIZATION
TCAE	TIME CLOSE AFTER ENERGIZATION
TDH	TOTAL DYNAMIC HEAD
TDR	TIME DELAY RELAY
TECH	TECHNICAL
TEL	TELEPHONE
TEMP	TEMPORARY, TEMPERATURE
TF	TOP FACE
TFG	TEMPERED FLOAT GLASS
TG	TEMPERED
TH	TOP-HINGED
THD	THREAD
THK	THICKNESS
THRU	THROUGH
TJB	TERMINAL JUNCTION BOX
TL	TEFLON LINED PIPE
T.O.	TIME TO OPEN, TOP OF
TOAE	TIME OPEN AFTER ENERGIZATION
TOC	TOP OF CONCRETE
TOC	TOP OF CURB
TOD	TIME ON DELAY, TOP OF DUCT
	TOTAL OXYGEN DEMAND
TOF	TOP OF FOOTING
TOG	TOP OF GROUT, TOP OF GRATE
T.O.P.	TOP OF PARAPET
TOS	TOP OF SLAB
TOW	TOP OF WALL
TP	TURNING POINT
TR	TRANSOM, TRUSS
TRANS	TRANSFORMER, TRANSITION
TRANSV	TRANSVERSE
TRD	TREAD
TS	TEMPORARY SEEDING, TUBE STEEL
TSHT	THRESHOLD
TSS	TOTAL SUSPENSION SOLIDS
TST	TOP OF STEEL
TTC	TELEPHONE TERMINAL CABINET
TTD	TOILET TISSUE DISPENSER
TU-X	TREATMENT UNIT NO. X
TURB	TURBIDITY
TWP	TRANSLUCENT WALL PANEL
TX	TRANSFORMER
TYP	TYPICAL
UON	UNLESS OTHERWISE NOTED
UNO	UNLESS NOTED OTHERWISE
UPS	UNINTERRUPTIBLE POWER SUPPLY
USB	UNIT SUBSTATION
UVR	UNDER VOLTAGE RELAY
V	VENT, VALVE
V	VOLTMETER, VOLTS
VB	VAPOR BARRIER (RETARDER)
VC	VERTICAL CURVE
VCP	VITRIFIED CLAY PIPE
VCT	VINYL COMPOSITION TILE
VEL	VELOCITY
VERT	VERTICAL
VHC	VOLATILE HYDROCARBONS
VIB	VIBRATION
VIF	VERIFY IN FIELD
VIN	VINYL
VINT, VT	VINYL TILE
VP	VERTICAL PIVOTED
VPS	VENEER PLASTER SYSTEM
VPC	POINT OF VERTICAL CURVATURE
VPI	POINT OF VERTICAL INTERSECTION
VPT	POINT OF VERTICAL TANGENT
VS	VERTICAL SLIDE
VTR	VENT THRU ROOF
VWC	VINYL WALL COVERING
W	WEST
W/	WITH
WC	WATER COLUMN
WDW	WASH DOWN WATER
WEASTRIP	WEATHERSTRIP
WG	WIRE, WIRE GLASS
WH	WATTHOUR METER
WHD	WATTHOUR DEMAND METER
WP	WATERPROOF, WEATHERPROOF, WORKPOINT
WR	WASTE RECEPTACLE
WRB	WATER RESISTANT GWB
WS	WATER SURFACE, WATERSTOP, WELDED STEEL
WWF	WELDED WIRE FABRIC
WWPH	WET WEATHER PEAK HOUR

NOTES:

1. CONTACT ENGINEER FOR ABBREVIATIONS USED BUT NOT SHOWN ON THIS DRAWING.

SECTION / DETAIL DESIGNATIONS

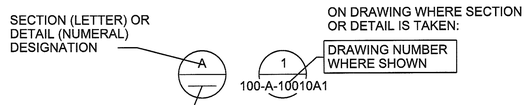

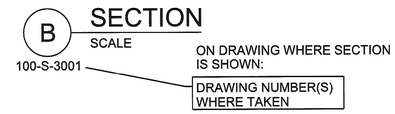

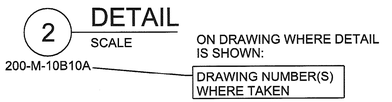

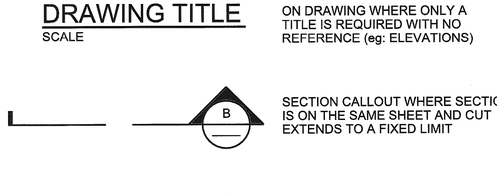

DESIGN DETAIL DESIGNATION

NOTES:

1. ALL DESIGN DETAILS ARE TYPICAL AND MUST BE USED IF DESIGN DETAIL DESIGNATION IS NOT SHOWN
2. THE TERM STANDARD DETAIL, OR A FORM OF IT, IS SYNOMONOUS WITH DESIGN DETAIL AND REFERS TO THE DESIGN DETAILS FOUND IN THIS SET OF CONTRACT DOCUMENTS.
3. THE DESIGN DETAILS REPRESENT THE CHARACTER AND NATURE OF THE WORK REQUIRED THROUGHOUT THE PROJECT. ALL ASSOCIATED WORK SHALL BE IN ACCORDANCE WITH THE DESIGN DETAILS SHOWN WHETHER THE DETAILS ARE SPECIFICALLY REFERENCED OR NOT.

COLUMN GRID SYSTEM

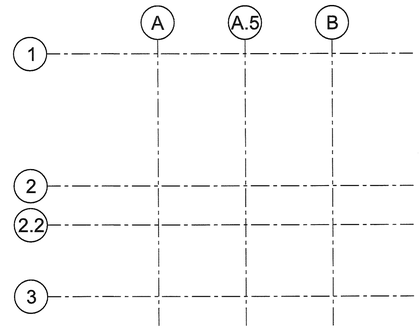

WHEN TO USE?
IF THERE ARE BUILDING COLUMNS, IF IT IS A VERY LARGE BUILDING, OR IF THERE ARE A LOT OF VARIATIONS OR BUMPOUTS (CORNERS) IN THE BUILDING.

USE LETTERS FOR THE LEAST NUMBER OF BAYS AND USE NUMBERS FOR THE MOST NUMBER OF BAYS.

AVOID USING LETTERS SUCH AS "I", "O" AND "Q".

START WITH WHOLE NUMBERS AND LETTERS. USE DECIMAL PLACES (B.5, 2.2) IF GRIDS ARE ADDED OR IF A GRID NEEDS TO BE VERY CLOSE TO ANOTHER GRID

FLORIDA DEPARTMENT OF ENVIRONMENTAL PROTECTION
FEB 07 2011
SOUTHWEST DISTRICT TAMPA

GENERAL NOTE:

1. THIS IS A STANDARD LEGEND SHEET. THEREFORE, NOT ALL OF THE INFORMATION SHOWN MAY BE USED ON THIS PROJECT.

NO	DATE	DSGN	DR	CHK	APVR	APVD
N					BY	
	DATE	R BRUNER	K RINER	KR CHANG	R BRUNER	
			DESCRIPTION	REVISION		

©CH2M HILL 2010. ALL RIGHTS RESERVED.
REUSE OF DOCUMENTS: THIS DOCUMENT AND THE IDEAS AND DESIGNS INCORPORATED HEREIN AS AN INSTRUMENT OF PROFESSIONAL SERVICE IS THE PROPERTY OF CH2M HILL AND IS NOT TO BE USED, IN WHOLE OR IN PART, FOR ANY OTHER PROJECT WITHOUT THE WRITTEN AUTHORIZATION OF CH2MHILL.

3011 SW WILLISTON RD
GAINESVILLE, FLORIDA 32608
EB0000072 AAC001992
Rufus J Bruner, III PE 35951

CH2MHILL

SOLID WASTE SYSTEM
UPGRADE DESIGN
PASCO COUNTY
PASCO COUNTY, FLORIDA

GENERAL

ABBREVIATIONS
SHEET 2

PERMITTING SUBMITTAL

VERIFY SCALE
BAR IS ONE INCH ON ORIGINAL DRAWING.
0 1"

DATE	FEBRUARY 2011
PROJ	378217
DWG	00-G-003A
SHEET	

GENERAL SITE NOTES:

1. ALL CONSTRUCTION MATERIAL, INSTALLATION AND TESTING SHALL CONFORM TO THE STANDARD SPECIFICATIONS OF PASCO COUNTY.
2. DRAINAGE CONVEYANCE SYSTEMS, I.E. SWALES, DITCHES, STORM SEWERS, CURB AND GUTTERS, SHALL BE IN COMPLIANCE WITH THE THE FLORIDA DEPARTMENT OF TRANSPORTATION STANDARD FOR ROAD AND BRIDGE CONSTRUCTION, LATEST EDITION.
3. ALL PAVEMENT SUBGRADE, BASE COURSE AND WEARING SURFACE MATERIAL AND INSTALLATION SHALL COMPLY WITH THE LATEST EDITION OF THE FLORIDA DEPARTMENT OF TRANSPORTATION STANDARD SPECIFICATION FOR ROAD AND BRIDGE CONSTRUCTION AND IN ACCORDANCE WITH THE REQUIREMENTS OF PASCO COUNTY.
4. SOURCE OF TOPOGRAPHY SHOWN ON THE CIVIL PLANS ARE BASE ON THE ORIGINAL SURVEY FILES FROM CH2M HILL DATED SEPTEMBER 2008.
5. EXISTING TOPOGRAPHY, STRUCTURES, AND SITE FEATURES ARE SHOWN SCREENED AND/OR LIGHT-LINED.
   NEW FINISH GRADE, STRUCTURES, AND SITE FEATURES ARE SHOWN HEAVY-LINED.
6. HORIZONTAL DATUM: THE SURVEY AND ASSOCIATED DRAWINGS ARE NOT IN A SPECIFIC DATUM. USE THE CONTROL POINT COORDINATES THAT ARE SHOWN ON THE DRAWINGS FOR HORIZONTAL CONTROL.
7. VERTICAL DATUM: NAVD 1988.
8. MAINTAIN, RELOCATE, OR REPLACE EXISTING SURVEY MONUMENTS, CONTROL POINTS, AND STAKES WHICH ARE DISTURBED OR DESTROYED. PERFORM THE WORK TO PRODUCE THE SAME LEVEL OF ACCURACY AS THE ORIGINAL MONUMENT(S) IN A TIMELY MANNER, AND AT THE CONTRACTOR'S EXPENSE.
9. COORDINATES AND DIMENSIONS SHOWN FOR ROADWAY IMPROVEMENTS ARE TO FACE OF CURB OR EDGE OF PAVEMENT.
10. ELEVATIONS GIVEN ARE TO FINISH GRADE UNLESS OTHERWISE SHOWN.
11. SLOPE UNIFORMLY BETWEEN CONTOURS AND SPOT ELEVATIONS SHOWN.
12. ALL DISTURBED AREAS NOT RECEIVING A HARD SURFACE SHALL BE SODDED WITH BAHIA PER THE PLANS AND SPECIFICATIONS.
13. CONTRACTOR SHALL BE RESPONSIBLE FOR IMPLEMENTING AND MAINTAINING EROSION CONTROL DEVICES DURING CONSTRUCTION. ADDITIONAL CONTROL MEASURES MAY BE REQUIRED BEYOND THOSE PRESENTED ON THE PLANS.
14. CONTRACTOR IS RESPONSIBLE FOR OBTAINING A NPDES GENERAL PERMIT FOR STORMWATER DISCHARGES FOR SMALL CONSTRUCTION ACTIVITIES. AS PART OF THE NPDES PERMIT, THE CONTRACTOR SHALL PREPARE A STORMWATER POLLUTION PREVENTION PLAN.
15. COORDINATE POINTS FOR DRAINAGE STRUCTURES ARE TO CENTER OF INLET AND FLOW LINE OF MITERED END SECTION.
16. NO DEWATERING IS EXPECTED FOR CONSTRUCTION. HOWEVER, IF DEWATERING GROUNDWATER INTO ONSITE STORMWATER MANAGMENT PONDS IS PROPOSED BY THE CONTRACTOR, A PERMIT DETERMINATION FROM FDEP'S INDUSTRIAL WASTE (IW) DEPARTMENT MAY BE REQUIRED. CONTACT MAURYN McDONALD, P.E. AT EXTENTION 402 FOR A DETERMINATION.

CONSTRUCTION WATER MANAGEMENT PLAN

1. THIS PLAN INDICATES THE MINIMUM EROSION AND SEDIMENT CONTROL MEASURES REQUIRED FOR THIS PROJECT. THE CONTRACTOR IS RESPONSIBLE FOR MEETING ALL APPLICABLE RULES, REGULATIONS AND WATER QUALITY GUIDELINES AND MAY NEED TO INSTALL ADDITIONAL CONTROLS.
2. THE CONTRACTOR IS RESPONSIBLE FOR FOLLOWING THE BEST EROSION AND SEDIMENT CONTROL PRACTICES AS OUTLINED IN THE PLANS, SPECIFICATIONS, AND APPLICABLE PERMIT(S) FOR THIS PROJECT.
3. FOR ADDITIONAL INFORMATION ON SEDIMENT AND EROSION CONTROL, REFER TO "THE FLORIDA DEVELOPMENT MANUAL - A GUIDE TO SOUND LAND AND WATER MANAGEMENT" FROM THE STATE OF FLORIDA DEPARTMENT OF ENVIRONMENTAL REGULATION (FDER), CHAPTER 6.
4. CONTRACTOR SHALL APPLY FOR AND COMPLY WITH GENERIC PERMIT FOR STORM WATER DISCHARGE FROM LARGE AND SMALL CONSTRUCTION SITES FROM THE FLORIDA DEPARTMENT OF ENVIRONMENTAL PROTECTION. THE CONTRACTOR SHALL PAY THE FEE.
5. EROSION AND SEDIMENT CONTROL BARRIERS SHALL BE PLACED ADJACENT TO ALL WETLAND AREAS WHERE THERE IS POTENTIAL FOR DOWNSTREAM WATER QUALITY DEGRADATION.
6. SILT FILTER FENCE WITHOUT WIRE REINFORCMENT SHALL BE USED UNLESS OTHERWISE SPECIFIED IN CONSTRUCTION DOCUMENTS.
7. ANY DISCHARGE FROM DEWATERING ACTIVITY SHALL BE FILTERED AND CONVEYED TO THE WETLAND IN A MANNER WHICH PREVENTS EROSION AND TRANSPORTATION OF SUSPENDED SOLIDS TO THE RECEIVING OUTFALL.
8. ALL EXCAVATIONS AND EARTHWORK SHALL BE ACCOMPLISHED TO MINIMIZE WATER TURBIDITY AND POLLUTION. DISCHARGE SHALL BE CONTROLLED AND REROUTED THROUGH SILTATION FILTERS AND SUMPS. THE CONTRACTOR SHALL BE RESPONSIBLE FOR THE PREVENTION, CORRECTION, CONTROL AD ABATEMENT OF EROSION AND WATER POLLUTION IN ACCORDANCE WITH CHAPTER 62-302, FLORIDA ADMINISTRATIVE CODE.
9. THE FILTER BARRIER SHALL BE ENTRENCHED AND BACKFILLED. AFTER THE BARRIERS ARE PLACED, THE EXCAVATED SOIL SHALL BE BACKFILLED AND COMPACTED AGAINST THE FILTER BARRIER.
10. BARRIERS SHALL BE INSPECTED IMMEDIATELY AFTER EACH RAINFALL AND AT LEAST DAILY DURING PROLONGED RAINFALL.
11. CLOSE ATTENTION SHALL BE PAID TO THE REPAIR OF DAMAGED BARRIERS, END RUNS AND UNDERCUTTING.
12. NECESSARY REPAIRS TO BARRIERS OR REPLACEMENT SHALL BE ACCOMPLISHED PROMPTLY.
13. SEDIMENT DEPOSITS SHOULD BE REMOVED AFTER EACH RAINFALL. THEY MUST BE REMOVED WHEN THE LEVEL OF DEPOSITION REACHES APPROXIMATELY ONE-HALF THE HEIGHT OF THE BARRIER.
14. ANY SEDIMENT DEPOSITS REMAINING IN PLACE AFTER THE BARRIER IS NO LONGER REQUIRED SHALL BE DRESSED TO CONFORM TO THE EXISTING GRADE, PREPARED AND SEEDED.
15. SHOULD THE FABRIC ON A SILT FENCE OR FILTER BARRIER DECOMPOSE OR BECOME INEFFECTIVE PRIOR TO THE END OF THE EXPECTED USABLE LIFE AND THE BARRIER IS STILL NECESSARY, THE FABRIC SHALL BE REPLACED PROMPTLY.
16. ADDITIONAL PROTECTION - ON-SITE PROTECTION MUST BE PROVIDED THAT WILL NOT PERMIT SILT TO LEAVE THE PROJECT CONFINES DUE TO UNFORESEEN CONDITIONS OR ACCIDENTS NOT ADDRESSED IN THESE DOCUMENTS.
17. ALL DISTURBED AREAS TO BE STABILIZED THROUGH COMPACTION, SILT SCREENS, AND GRASSING.
18. THE CONTRACTOR IS RESPONSIBLE FOR THE REMOVAL OF ANY SEDIMENT THAT LEAVES THE SITE AND CHANGES ANY DOWNSTREAM CONDITIONS BY RAISING CHANNEL BOTTOMS AND/OR CLOGGING OUTFALL CULVERTS.
19. THE CONTRACTOR IS RESPONSIBLE FOR REMOVING SILT FROM SITE IF NOT REUSABLE ON-SITE AND ASSURING PLAN ALIGNMENT AND GRADE IN ALL DITCHES AND SWALES AT COMPLETION OF CONSTRUCTION.
20. CONTRACTOR SHALL ENSURE THAT ALL DRAINAGE STRUCTURES, PIPES, ETC., ARE CLEANED OUT AND WORKING PROPERLY AT TIME OF ACCEPTANCE.
21. THE SITE CONTRACTOR IS RESPONSIBLE FOR REMOVING THE DEWATERING, TEMPORARY EROSION AND SEDIMENT CONTROL DEVICES AFTER COMPLETION OF CONSTRUCTION AND ONLY WHEN AREAS HAVE BEEN STABILIZED WITH VEGETATION OR OTHER PERMENANT EROSION CONTROL METHODS.
22. THE CONTRACTOR SHALL PAY FOR ANY WATER QUALITY CONTROL VIOLATIONS FROM ANY AGENCY THAT RESULTS IN FINES BEING ASSESSED TO THE OWNER BECAUSE OF THE CONTRACTOR'S FAILURE TO ELIMINATE TURBID RUNOFF FROM LEAVING THE SITE AND RAISING BACKGROUND LEVELS ABOVE EXISTING BACKGROUND LEVEL.
23. IN THE EVENT THAT THE EROSION CONTROL MEASURES SHOWN BECOME DAMAGED OR ARE INSUFFICIENT TO PROTECT THE WATERS OF THE STATE, THE CONTRACTOR SHALL INSTALL ADDITIONAL MEASURES.

YARD PIPING LEGEND

EXISTING | THIS CONTRACT

- NOMINAL PIPE DIAMETER
- PIPE USE IDENTIFICATION (8" PE)
- PIPING < 30" DIAMETER
- PIPING ≥ 30" DIAMETER
- EXISTING PIPE TO BE ABANDONED
- EXISTING PIPE TO BE REMOVED
- NON-FREEZE HOSE VALVE (V-X) X = NO. IN SPECIFICATIONS
- NON-FREEZE HOSE VALVE WITH HOSE RACK (V-X) X = NO. IN SPECIFICATIONS
- INDICATOR POST VALVE
- GATE VALVE AND VALVE BOX
- BUTTERFLY VALVE AND VALVE BOX
- PLUG VALVE AND VALVE BOX
- FLEXIBLE COUPLING
- 90° ELBOW UP
- 90° ELBOW DOWN
- BEND < 90° UP
- BEND < 90° DOWN
- CONCENTRIC REDUCER
- CAP OR PLUG
- CLEANOUT
- FIRE HYDRANT

CIVIL LEGEND

*EXISTING INFRASTRUCTURE SHOWN SCREENED

- 158.5 — SPOT ELEVATION
- 155 — CONTOUR LINE
- 3:1 — EMBANKMENT AND SLOPE
- DRAINAGEWAY OR DITCH
- INLET
- OUTFALL
- OR — SIGN
- POST OR GUARD POST
- BENCH MARK
- BRUSH/TREE LINE
- TREE
- PROPERTY LINE
- CENTER LINE, BUILDING, ROAD, ETC.
- FUTURE ROAD OR STRUCTURES
- N 1000.00 / E 1000.00 — STRUCTURE, BUILDING OR FACILITY LOCATION POINT - COORDINATES
- B-1 — BORING LOCATION AND NUMBER
- OR — DEMOLITION
- OR — STRUCTURE, BUILDING OR FACILITY
- ASPHALT CONCRETE PAVEMENT
- GRAVEL SURFACING
- CONCRETE PAVEMENT
- CURB
- SINGLE SWING GATE
- DOUBLE SWING GATE
- SLIDING GATE
- CHAIN LINK FENCE
- SILT FENCE

SECTION AND DETAIL IDENTIFICATION

SECTION AND DETAIL DESIGNATORS

SECTION (LETTER) OR DETAIL (NUMBER) DESIGNATION

DRAWING NUMBER WHERE DETAIL CAN BE FOUND

A
10-A-1

ON DRAWING WHERE DETAIL IS DRAWN:

DETAIL DESIGNATED

A UNTITLED
SCALE: AS DESIGNATED

STANDARD DETAIL DESIGNATION

STANDARD DETAIL — 1234-567

AS INDICATED (SEE DETAIL DRAWINGS)

FLORIDA DEPARTMENT OF ENVIRONMENTAL PROTECTION
FEB 07 2011
SOUTHWEST DISTRICT
TAMPA

GENERAL NOTE:

1. THIS IS A STANDARD LEGEND SHEET. THEREFORE, NOT ALL OF THE INFORMATION SHOWN MAY BE USED ON THIS PROJECT.

NO.	DATE	DSGN	DR	CHK	APVD	BY	APVD
		R MORRISON	C CHILDRESS	C KOHLER			R MORRISON

REVISION

©CH2M HILL 2010. ALL RIGHTS RESERVED. THE IDEAS AND DESIGNS INCORPORATED HEREIN, AS AN INSTRUMENT OF PROFESSIONAL SERVICE, ARE THE PROPERTY OF CH2M HILL AND IS NOT TO BE USED, IN WHOLE OR IN PART, FOR ANY OTHER PROJECT WITHOUT THE WRITTEN AUTHORIZATION OF CH2M HILL

3011 SW WILLISTON RD
GAINESVILLE, FLORIDA 32608
EB0000072 AAC001992
Richard Thomas Morrison PE 67713

SOLID WASTE SYSTEM
UPGRADE DESIGN
PASCO COUNTY
PASCO COUNTY, FLORIDA

CH2MHILL

GENERAL
CIVIL NOTES AND LEGEND

REUSE OF DOCUMENTS: THIS DOCUMENT, AND THE IDEAS AND DESIGNS INCORPORATED HEREIN, AS AN INSTRUMENT OF PROFESSIONAL SERVICE, ARE THE PROPERTY OF CH2M HILL AND IS NOT TO BE USED, IN WHOLE OR IN PART, FOR ANY OTHER PROJECT WITHOUT THE WRITTEN AUTHORIZATION OF CH2M HILL

PERMITTING SUBMITTAL

VERIFY SCALE
BAR IS ONE INCH ON ORIGINAL DRAWING. 0 1"

DATE	FEBRUARY 2011
PROJ	378217
DWG	00-G-004
SHEET	

DESIGN CRITERIA

1. APPLICABLE CODE: 2007 FLORIDA BUILDING CODE (FBC), AS AMENDED BY LOCAL AGENCIES.
2. REFER TO THE DRAWINGS FOR ADDITIONAL AND SPECIFIC STRUCTURE LOADINGS AND REQUIREMENTS.
3. LIVE LOADS:
   - OFFICE FLOOR 125 PSF
   - STAIRS 100 PSF
   - ROOF 25 PSF
4. WIND LOAD:
   - FBC WIND PRESSURE
   - MPH WIND SPEED = 120 MPH (3-SEC GUST)
   - EXPOSURE = C
   - I = 1.15
5. SOIL DESIGN PARAMETERS:
   - A. NET ALLOWABLE SOIL BEARING PRESSURES: 2000 PSF
   - B. EQUIVALENT DRAINED FLUID PRESSURES:
     - ACTIVE: 39 PCF
     - AT REST: 58 PCF
     - PASSIVE: 345 PCF
   - C. VERTICAL SURCHARGE: 200 PSF TRAFFIC LOAD
   - D. COEFFICIENT OF FRICTION:
   - E. NATIVE SOIL UNIT WEIGHT: 115 PCF
   - F. DESIGN GROUND WATER ELEVATION: SOIL FRICTION AND WEDGE FAILURE NOT CONSIDERED IN UPLIFT RESISTANCE: NORMAL HIGH GWT WITH UPLIFT (FS=1.10): EL. AT GRADE FOR EAST PASCO SITE AND 6' BELOW GRADE FOR WEST PASCO SITE 100 YEAR FLOOD EL. = N/A

GENERAL INFORMATION

1. FOR ABBREVIATIONS NOT LISTED, SEE ASME Y14.38 "ABBREVIATIONS AND ACRONYMS" PUBLICATION AS DISTRIBUTED BY THE AMERICAN SOCIETY OF MECHANICAL ENGINEERS (ASME).
2. DESIGN DETAILS ARE INTENDED TO BE TYPICAL AND SHALL APPLY TO SIMILAR SITUATIONS OCCURRING THROUGHOUT THE PROJECT, WHETHER OR NOT THEY ARE INDIVIDUALLY CALLED OUT.
3. VERIFY OPENING DIMENSIONS IN WALLS, SLABS, AND DECKS WITH OTHER DISCIPLINE DRAWINGS.
4. FOR NUMBER, TYPE, SIZE, ARRANGEMENT, AND/OR LOCATION OF EQUIPMENT PADS SEE OTHER DISCIPLINE DRAWINGS. COORDINATE WITH EQUIPMENT SUPPLIER PRIOR TO PLACING SLABS, WALLS AND FOUNDATIONS. COORDINATE PIPING OPENINGS WITH OTHER DISCIPLINE DRAWINGS.
5. CUT NO STRUCTURAL MEMBERS FOR PIPES, DUCTS, ETC, UNLESS SPECIFICALLY DETAILED OR APPROVED IN WRITING BY THE ENGINEER.
6. VISITS TO THE JOB SITE BY THE ENGINEER TO OBSERVE THE CONSTRUCTION DO NOT IN ANY WAY MEAN THAT ENGINEER IS GUARANTOR OF CONSTRUCTOR'S WORK, NOR RESPONSIBLE FOR THE COMPREHENSIVE OR SPECIAL INSPECTIONS, COORDINATION, SUPERVISION, NOR SAFETY AT THE JOB SITE.
7. SPECIFIED CONCRETE AND MASONRY TESTING DURING CONSTRUCTION SHALL BE OWNER FURNISHED. SPECIFIED LABORATORY TEST MIXES SHALL BE THE RESPONSIBILITY OF THE CONTRACTOR.

FOUNDATIONS

1. REFER TO GEOTECHNICAL REPORT BY CH2MHILL GEOTECHNICAL INVESTIGATION FOR THIS PROJECT DATED 2008
2. EXCAVATION SHALL BE SHORED TO PREVENT SUBSIDENCE OR DAMAGE TO ADJACENT STRUCTURES.
3. ALL FOUNDATION SLABS, SLABS-ON-GRADE AND WALL AND COLUMN FOUNDATIONS SPECIFICALLY NOTED TO BE ON FILL SHALL BEAR ON COMPACTED GRANULAR FILL AS SPECIFIED.
4. ALL COLUMN AND WALL FOOTING AND FOUNDATION MAT SLABS SHALL BE CAST ON FIRM COMPACTED SOILS, UNLESS NOTED OTHERWISE.
5. ALL FOUNDATION BEARING SURFACES SHALL BE INSPECTED BY THE GEOTECHNICAL ENGINEER PRIOR TO PLACEMENT OF REINFORCING STEEL.
6. NO BACKFILL SHALL BE PLACED BEHIND WALLS UNTIL THE CONCRETE HAS ATTAINED 100 PERCENT OF IT'S SPECIFIED COMPRESSIVE STRENGTH.

FORMWORK, SHORING AND BRACING

1. STRUCTURES SHOWN ON THE DRAWINGS HAVE BEEN DESIGNED FOR STABILITY UNDER FINAL CONDITIONS ONLY. DESIGN SHOWN DOES NOT INCLUDE NECESSARY COMPONENTS OR EQUIPMENT FOR STABILITY OF THE STRUCTURES DURING CONSTRUCTION. CONTRACTOR IS RESPONSIBLE FOR ALL WORK RELATING TO CONSTRUCTION ERECTION METHODS, BRACING, SHORING, RIGGING, GUYS, SCAFFOLDING, FORMWORK, AND OTHER WORK AIDS REQUIRED TO SAFELY PERFORM THE WORK SHOWN.
2. TEMPORARY SHORING SHALL REMAIN IN PLACE UNTIL ELEVATED CONCRETE FLOOR OR SLABS HAVE REACHED 28 DAY DESIGN STRENGTH AS DETERMINED BY CYLINDER BREAKS.

CONCRETE REINFORCING

1. MINIMUM REINFORCING FOR ALL CONCRETE WALLS AND SLABS SHALL BE AS FOLLOWS:

WALL OR SLAB THICKNESS	REINF EACH WAY	LOCATION
6"	#4@12"	CENTERED
8"	#5@12"	CENTERED
10"	#4@12"	EACH FACE
12"	#5@12"	EACH FACE

   PROVIDE LARGER SIZES AND MORE REINFORCING IN SECTIONS OF CONCRETE WHERE REQUIRED BY THE DETAILS ON THE DRAWINGS OR BY THE SPECIFICATIONS.
2. CLEARANCE FOR REINFORCEMENT BARS, UNLESS SHOWN OTHERWISE, SHALL BE:
   - WHEN PLACED ON GROUND: 3"
   - INTERIOR, FINISHED, HUMIDITY CONTROLLED AREAS:
     - WALLS, SLABS AND JOISTS 3/4"
     - BEAM STIRRUPS AND COLUMN TIES 1 1/2"
   - ALL OTHER CONCRETE SURFACES: 2"
3. 90 DEGREE BENDS, UNLESS OTHERWISE SHOWN, SHALL BE ACI 318 STANDARD HOOKS.
4. WALL CORNER AND WALL INTERSECTION REINFORCEMENT BARS SHALL BE CONTINUOUS AROUND CORNERS AND THROUGH COLUMNS OR PILASTERS. REINFORCEMENT SHALL BE EXTENDED INTO CONNECTING WALLS AND LAPPED ON THE OPPOSITE FACE OF THE CONNECTING WALLS, AS INDICATED IN DETAIL 0330-003.
5. LAP VERTICAL WALL BARS WITH DOWELS FROM BASE SLABS AND EXTEND INTO TOP FACE OF ROOF SLABS AND LAP WITH TOP SLAB REINFORCEMENT. PROVIDE A MINIMUM OF FOUR FULL HEIGHT VERTICAL BARS WITH MATCHING DOWELS AT WALL ENDS, CORNERS AND INTERSECTIONS WITH SIZE TO MATCH TYPICAL VERTICAL REINFORCING STEEL SHOWN OR REQUIRED BY NOTES ABOVE.
6. LOCATE SLAB AND BEAM TOP BAR SPLICES AT MIDSPAN AND BOTTOM BAR SPLICES AT SUPPORTS.

   REINFORCEMENT BENDS AND LAPS, UNLESS OTHERWISE NOTED, SHALL SATISFY THE FOLLOWING MINIMUM REQUIREMENTS:

GRADE 60 REINFORCING STEEL

BAR SIZE		#3	#4	#5	#6	#7	#8	#9	#10	#11
LAP SPLICE LENGTH										
SPACING<6"	TOP BAR ⊬	1'-4"	2'-0"	3'-0"	4'-0"	5'-10"	6'-8"	7'-7"	8'-6"	9'-5"
	OTHER BAR	1'-4"	1'-7"	2'-4"	3'-1"	4'-6"	5'-2"	5'-10"	6'-7"	7'-3"
SPACING≥6"	TOP BAR ⊬	1'-4"	1'-8"	2'-0"	2'-5"	3'-6"	4'-0"	5'-0"	6'-2"	7'-5"
	OTHER BAR	1'-4"	1'-4"	1'-7"	1'-10"	2'-9"	3'-1"	3'-10"	4'-9"	5'-8"
EMBEDMENT LENGTH										
SPACING<6"	TOP BAR ⊬	1'-0"	1'-7"	2'-4"	3'-1"	4'-6"	5'-2"	5'-10"	6'-7"	7'-3"
	OTHER BAR	1'-0"	1'-3"	1'-9"	2'-5"	3'-6"	4'-0"	4'-6"	5'-1"	5'-7"
SPACING≥6"	TOP BAR ⊬	1'-0"	1'-3"	1'-7"	1'-10"	2'-9"	3'-1"	3'-10"	4'-9"	5'-8"
	OTHER BAR	1'-0"	1'-0"	1'-3"	1'-5"	2'-1"	2'-5"	3'-0"	3'-8"	4'-5"

TOP BARS SHALL BE DEFINED AS ANY HORIZONTAL BARS PLACED SUCH THAT MORE THAN 12 INCHES OF CONCRETE IS CAST IN THE MEMBER BELOW THE BAR IN ANY SINGLE POUR. HORIZONTAL WALL BARS ARE CONSIDERED TOP BARS.
WHERE 3000 PSI CONCRETE IS USED, INCREASE ABOVE LENGTHS BY 16 PERCENT.

CONCRETE

1. 28-DAY CAST-IN-PLACE CONCRETE STRENGTHS:
   - TYPICAL: 4000 PSI
   - CURBS AND SIDEWALKS: 3000 PSI
   - CONDUIT ENCASEMENTS: 3000 PSI
   - PIPE ENCASEMENTS NOT INTEGRAL WITH FOUNDATIONS: 3000 PSI
2. REINFORCING STEEL:
   - TYPICAL: ASTM A615, GRADE 60
   - WELDED: ASTM A706, GRADE 60
3. FABRICATION AND PLACEMENT OF REINFORCING STEEL SHALL BE IN ACCORDANCE WITH CRSI MSP-1 "MANUAL OF STANDARD PRACTICE" AND ACI 301 "SPECIFICATIONS FOR STRUCTURAL, CONCRETE FOR BUILDING".
4. CONSTRUCTION JOINTS INDICATED ARE SUGGESTED LOCATIONS. CONTRACTOR MAY REVISE LOCATION OF JOINTS, SUBJECT TO SPECIFIED REQUIREMENTS. ADDITIONAL CONSTRUCTION JOINT LOCATIONS, INCLUDING ADDITIONAL REQUIRED FOR CONSTRUCTION, SHALL BE SUBMITTED FOR REVIEW BY ENGINEER.
5. ROUGHEN AND CLEAN CONSTRUCTION JOINTS IN WALLS AND SLABS AS SPECIFIED PRIOR TO PLACING ADJACENT CONCRETE.
6. THE CONTRACTOR SHALL COORDINATE PLACEMENT OF OPENINGS, CURBS, DOWELS, SLEEVES, CONDUITS, BOLTS AND INSERTS PRIOR TO PLACEMENT OF CONCRETE.
7. NO ALUMINUM CONDUIT OR PRODUCTS CONTAINING ALUMINUM OR ANY OTHER MATERIAL INJURIOUS TO THE CONCRETE SHALL BE EMBEDDED IN THE CONCRETE.
8. CONDUIT SHALL NOT BE PLACED PARALLEL WITH BEAM OR COLUMN REINFORCEMENT UNLESS SPECIFICALLY INDICATED IN DRAWINGS.

STEEL DECK

1. FOR DECK SIZE, GAGE, AND FASTENING REQUIREMENTS, SEE FRAMING PLANS.
2. WELDING SHALL BE IN ACCORDANCE WITH AWS D1.3 "STRUCTURAL WELDING CODE – SHEET STEEL".
3. DECKING SHALL HAVE A MINIMUM 1 1/2 INCHES BEARING ON ALL SUPPORTS.
4. DECKING SHALL BE CONTINUOUS OVER THREE SPANS MINIMUM, EXCEPT WHERE SHOWN OTHERWISE.

STEEL DECK

1. FOR DECK SIZE, GAGE, AND FASTENING REQUIREMENTS, SEE FRAMING PLANS.
2. WELDING SHALL BE IN ACCORDANCE WITH AWS D1.3 "STRUCTURAL WELDING CODE – SHEET STEEL".
3. DECKING SHALL HAVE A MINIMUM 1 1/2 INCHES BEARING ON ALL SUPPORTS.
4. DECKING SHALL BE CONTINUOUS OVER THREE SPANS MINIMUM, EXCEPT WHERE SHOWN OTHERWISE.

STRUCTURAL STEEL AND METAL FABRICATIONS

1. STRUCTURAL STEEL SHALL CONFORM TO THE FOLLOWING:
   - W-SHAPES A992
   - MISCELLANEOUS SHAPES INCLUDING ANGLES, CHANNELS, PLATES, ETC. A36
   - SQUARE OR RECTANGULAR STEEL TUBING A500, GRADE B
   - STEEL PIPE A53, GRADE B
2. STRUCTURAL STEEL SHALL BE FABRICATED AND ERECTED IN CONFORMANCE WITH THE AISC MANUAL OF CURRENT OSHA STANDARDS.
3. BOLTS SHALL BE HIGH STRENGTH BOLTS CONFORMING TO THE FOLLOWING EXCEPT WHERE SPECIFICALLY INDICATED OTHERWISE:
   - UNLESS SHOWN OTHERWISE A325-N
   - SLIP CRITICAL A325-SC
   - ANCHOR BOLTS (AB)
     - STAINLESS STEEL F593, AISI TYPE 316, CONDITION CW
     - STEEL F1554, GR 36
     - GALVANIZED STEEL F1554, GR 36 / A153
   - MACHINE BOLTS (MB) A307
4. ITEMS TO BE EMBEDDED IN CONCRETE SHALL BE CLEAN AND FREE OF OIL,
5. DIRT AND PAINT.

   NO HOLES OTHER THAN THOSE SPECIFICALLY DETAILED SHALL BE ALLOWED THROUGH STRUCTURAL
   STRUCTURAL STEEL IS PERMITTED WITHOUT THE APPROVAL OF THE ENGINEER.
   STEEL CONSTRUCTION, CURRENT EDITION, AND STEEL MEMBERS.
   NO CUTTING OR BURNING OF

GENERAL

1. PRE ENGINEERED METAL BUILDING MANUFACTURER SHALL DESIGN THE CANOPY AT SCALES AND PROVIDE SUPPORT FRAMING FOR ALL LOADS FROM ANY EQUIPMENT SUPPORTED BY THE ROOF. COORDINATE EQUIPMENT LOADS WITH EQUIPMENT MANUFACTURER AND OTHER DISCIPLINE DRAWINGS.

FLORIDA DEPARTMENT OF ENVIRONMENTAL PROTECTION
FEB 07 2011
SOUTHWEST DISTRICT TAMPA

M THUE — N — APVD
M THUE — BY — APVR
M CHRZANOWSKI — CHK — APVD — DESCRIPTION
K RINER — DR — REVISION
M THUE — DATE — DATE — NO
DSGN — NO.

© CH2M HILL 2010. ALL RIGHTS RESERVED.
REUSE OF DOCUMENTS: THIS DOCUMENT, AND THE IDEAS AND DESIGNS INCORPORATED HEREIN, AS AN INSTRUMENT OF PROFESSIONAL SERVICE, IS THE PROPERTY OF CH2M HILL AND IS NOT TO BE USED, IN WHOLE OR IN PART, FOR ANY OTHER PROJECT WITHOUT THE WRITTEN AUTHORIZATION OF CH2MHILL.

PERMITTING SUBMITTAL

CH2MHILL
3011 SW WILLISTON RD
GAINESVILLE, FLORIDA 32608
EB0000072 AAC001992
Monrad R Thue PE 32071

SOLID WASTE SYSTEM
UPGRADE DESIGN
PASCO COUNTY
PASCO COUNTY, FLORIDA

GENERAL
STRUCTURAL LEGEND AND GENERAL NOTES

VERIFY SCALE
BAR IS ONE INCH ON ORIGINAL DRAWING. 0 1"

DATE	FEBRUARY 2011
PROJ	378217
DWG	00-G-005
SHEET	

GENERAL ARCHITECTURAL NOTES

1. UNLESS OTHERWISE INDICATED, PLAN DIMENSIONS ARE TO COLUMN GRID ON CENTERLINES, NOMINAL SURFACE OF MASONRY, FACE OF FINISH AND FACE OF CONCRETE WALLS.
2. "FLOOR LINE" REFERS TO TOP OF CONCRETE SLABS. FINISH FLOORING IS INSTALLED ABOVE THE FLOOR LINE. FOR DEPRESSED FLOORS AND CURBS, SEE STRUCTURAL DRAWINGS.
3. REPETITIVE FEATURES ARE NOT DRAWN IN THEIR ENTIRETY AND SHALL BE COMPLETELY PROVIDED AS IF DRAWN IN FULL.
4. WHERE DOOR IS LOCATED NEAR CORNER OF ROOM AND IS NOT LOCATED BY DIMENSION ON PLAN OR DETAILS, DIMENSION SHALL BE 3-INCHES FROM FACE OF STUD (WALL) TO FACE OF ROUGH OPENING. DIMENSION SHALL BE 6" FROM FACE OF WALL TO EDGE OF ROUGH OPENING AT CONCRETE WALLS, 8" AT CMU WALLS.
5. AT SOUND INSULATED WALLS, FULL HEIGHT PARTITIONS SHALL BE SEALED BOTH SIDES WITH ACOUSTIC SEALANT; TOP, BOTTOM, INTERSECTION, DOOR FRAMES, GLAZED OPENING FRAMES, AND OTHER PENETRATIONS.
6. LINE OF EXISTING GRADES, AS SHOWN ON THE BUILDING ELEVATIONS AND SECTIONS ARE APPROXIMATE. THEY ARE AT THE BUILDING FACE, OR ON THE SECTION END EXCEPT AS NOTED.
7. VERIFY ALL ROUGH-IN DIMENSIONS FOR EQUIPMENT PROVIDED IN THIS CONTRACT, OR BY OTHERS.
8. REFER TO ARCHITECTURAL, STRUCTURAL, MECHANICAL, ELECTRICAL AND OTHER CATEGORIES OR DRAWINGS FOR ADDITIONAL NOTES.
9. VERIFY SIZE AND LOCATION OF, AND PROVIDE: REQUIRED OPENINGS THROUGH FLOORS AND WALLS, ACCESS DOORS, FURRING, CURBS, ANCHORS AND INSERTS .PROVIDE ALL BASES AND BLOCKING REQUIRED FOR ACCESSORIES, MECHANICAL, ELECTRICAL AND OTHER EQUIPMENT.
10. FOR SIGN LOCATIONS SEE LIFE SAFETY PLANS ON ARCHITECTURAL DRAWINGS.
11. FOR GUARD POSTS LOCATIONS, SEE STRUCTURAL\CIVIL DRAWINGS.

FLORIDA ACCESSIBILITY CODE FOR BUILDING CONSTRUCTION (ADA)

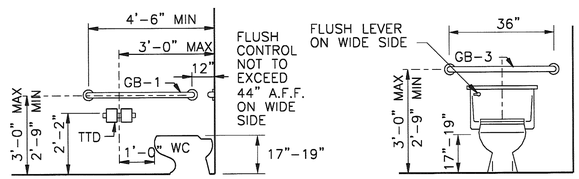

WATER CLOSETS 11-4.23.4

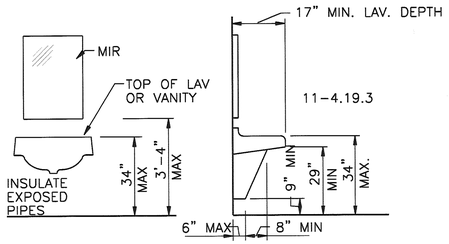

LAVATORIES & MIRRORS 11-4.19

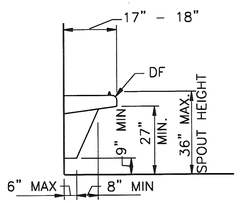

DRINKING FOUNTAINS 11-4.1.3 (10)

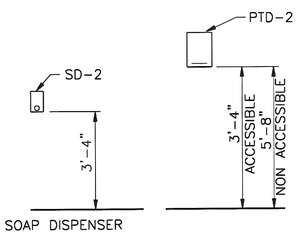

DISPENSERS 11-4.23.7

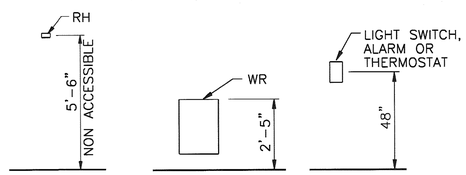

ALARMS 11-4.28

FOR INFORMATION ABOUT ADA SIGN REQUIRED FOR TOILET ROOMS, SEE SPECIFICATION SECTION 10 14 00.

ARCH/STRUCT MATERIAL SYMBOLS

SYMBOL	LEGEND
	GRATING, SPAN DIRECTION INDICATED
	CHECKERED PLATE
	GROUT
	GRANULAR FILL
	EARTH OR FINISH GRADE
	CONCRETE
	CMU WALL (PLAN)
	CMU WALL (SECTION)
	MASONRY WALL
	METAL STUD WALL (PLAN)
	WOOD STUD WALL (PLAN)
	RIGID INSULATION
	BATT INSULATION
	STEEL
	ALUMINUM
	PLYWOOD
	GYPSUM WALLBOARD
	ACOUSTICAL TILE
	WOOD, ROUGH CONTINUOUS
	WOOD, ROUGH NON-CONTINUOUS
	WOOD, FINISHED

ARCHITECTURAL/STRUCTURAL LEGEND

SYMBOL	LEGEND
A	GRID / COLUMN INDICATOR
ROOM NAME XX101 OR ROOM NAME 101	ROOM IDENTIFIER
"XX" = FACILITY INDICATOR (IF SHOWN); DOOR LETTER; ROOM NUMBER; XX101A	DOOR IDENTIFIER
XXW-1 OR W-1	WINDOW IDENTIFIER
XXR-1 OR R-1	RELIGHT IDENTIFIER
XXL-1 OR L-1	LOUVER IDENTIFIER
A	WALL TYPE INDICATOR
S-1	SIGNAGE IDENTIFIER
QUANTITY AND DIRECTION OF POINTERS AS REQUIRED; A B C D E; 1 XX-A-301	INTERIOR ELEVATION INDICATOR
⊗ 110.50	SPOT ELEVATION INDICATOR (IN FEET)
XXXX EL XX.XX	ELEVATION DATUM (IN FEET)
	DIRECTION OF SLOPE DOWN
HINGE SIDE	HATCH SWING INDICATOR

SYMBOL	LEGEND
ACTIVE; XX101A; INACTIVE	INDICATES PAIR OF DOORS (DOOR # ON ACTIVE)
F.EXT-X (IN CABINET); F.EXT-X (ON BRACKET)	FIRE EXTINGUISHER "X" = NUMBER IN SPECIFICATIONS
CJ	CONTROL JOINT
X" EJ	EXPANSION JOINT X" = DIMENSION
POST	RAILINGS
P-1	PRECAST PANEL IDENTIFIER
S-X	SLAB INDICATOR
X	COLUMN INDICATOR
W-X	WALL INDICATOR
B-X	BEAM INDICATOR

ACCESSIBLE MOUNTING HEIGHTS

NOTE:

1– INSTALLATION OF ACCESSIBLE TOILET AND BATH ACCESSORIES AND OTHER FIXTURES AND ITEMS SHALL MEET THE REQUIREMENTS OF THE AMERICANS WITH DISABILITIES ACT (ADA) AND WHEN APPLICABLE, FLORIDA BUILDING CODE. CHAPTER 11

2– GRAB BARS AND SHOWER SEATS ARE TO BE CONSTRUCTED AND INSTALLED TO MEET THE FOLLOWING STRUCTURAL STRENGTHS:

250 LB. BENDING MOMENT
250 LB. SHEAR STRESS
SHEAR FORCE INDUCED ON FASTENER OR MOUNTING DEVICE FROM APPLICATION OF 250 LB. FORCE SHALL BE LESS THAN ALLOWABLE LATERAL LOAD OF FASTENER OR SUPPORT STRUCTURE.

TENSILE FORCE INDUCED BY DIRECT TENSION FORCE OF 250 LB. PLUS MAXIMUM MOMENT FROM THE APPLICATION OF 250 LB SHALL BE LESS THAN THE ALLOWABLE WITHDRAWAL LOAD BETWEEN FASTENER AND SUPPORTING STRUCTURE.

3– GRAB BARS SHALL NOT ROTATE WITHIN THEIR FITTINGS.

4– DOOR OPENING FORCE: EXTERIOR - 8.5 LB, INTERIOR HINGED - 5 LB, SLIDING OR FOLDING - 5 LB

APPLICABLE CODE LIST

2007 Florida Building Code
2007 Florida Mechanical OCde
2007 Florida Plumbing Code
National Electrical Code, NFPA 70
2007 Florida Fire Prevention Code

©CH2M HILL 2010. ALL RIGHTS RESERVED.
THIS DOCUMENT, AND THE IDEAS AND DESIGNS INCORPORATED HEREIN, AS AN INSTRUMENT OF PROFESSIONAL SERVICE, IS THE PROPERTY OF CH2M HILL AND IS NOT TO BE USED, IN WHOLE OR IN PART, FOR ANY OTHER PROJECT WITHOUT THE WRITTEN AUTHORIZATION OF CH2MHILL
REUSE OF DOCUMENTS:

NO	DATE	DSGN	DR	CHK	DESCRIPTION	APVD	BY	APVR
		B TRAUTWEIN	A COULLIAS	T DODGE	REVISION	B TRAUTWEIN		N

CH2MHILL
3011 SW WILLISTON RD
GAINESVILLE, FLORIDA 32608
EB0000072 AAC001992
Beth Trautwein AR 91388

SOLID WASTE SYSTEM
UPGRADE DESIGN
PASCO COUNTY
PASCO COUNTY, FLORIDA

GENERAL
ARCHITECTURAL LEGEND AND GENERAL NOTES

FLORIDA DEPARTMENT OF ENVIRONMENTAL PROTECTION
FEB 07 2011
SOUTHWEST DISTRICT TAMPA

PERMITTING SUBMITTAL

VERIFY SCALE
BAR IS ONE INCH ON ORIGINAL DRAWING. 0 1"

DATE	FEBRUARY 2011
PROJ	378217
DWG	00-G-006
SHEET	

CONTROL POINT #1
4"x4" CONCRETE
MONUMENT STAMPED
POINT #1718
NORTH: 1469484.357
EAST: 317416.614
ELEVATION = 51.599

N

0 100 200 300

NOTE:
CONTRACTOR TO COORDINATE STAGING AREA WITH THE COUNTY.

SEE DWG 05-C-103

DEMOLISH EXISTING WALLS AND CONSTRUCT NEW 8' HIGH PUSH WALL

RECYCLING AREA

EXISTING STORMWATER MANAGEMENT POND

EXISTING CLASS III LANDFILL

SEE DWG 05-C-102 AND 05-C-105

SEE DWG 05-C-104 AND 05-C-106

EXISTING PROPERTY LINE

NEW CHAIN LINK FENCE

EXISTING SCALE HOUSE. DEMOLISH EXISTING SCALES. CONSTRUCT ROOFED PATIO.

EXISTING PROPERTY LINE

NEW GATE

EXISTING WATER WELL

EXISTING LEACHATE PUMP STATION

DRY RETENTION POND 4

RAIN SHED

RECYCLE BOX AREA

ATTENDANT BUILDING WITH GARAGE

PARKING AREA

CONTROL POINT #1
4"x4" CONCRETE
MONUMENT STAMPED
POINT #1711
NORTH: 1468175.87
EAST: 316092.91
ELEVATION = 43.448

CONTRACTOR STAGING AND STOCKPILE AREA

PROPOSED CDO

HAUL ROAD

DRY RETENTION POND 1

RETURN ROUTE

EXIT SCALE BYPASS

NEW CANOPY

NEW GATE

DRY RETENTION POND 2

NEW SCALE HOUSE

PARKING AREA

ENTRANCE SCALE BYPASS

NEW SCALES

NEW CHAIN LINK FENCE AND GATE

DRY RETENTION POND 3

PROPOSED CDO AREA - ALTERNATE BID ITEM

STATIONARY COMPACTOR AND OPEN TOP BOX BAYS, TYP

NEW CANOPY

NO.	DATE	REVISION	BY
DSGN	R MORRISON	DR R MORRISON	CHK C KOHLER	APVD R MORRISON	APVD

©CH2M HILL 2010. ALL RIGHTS RESERVED.
REUSE OF DOCUMENTS: THIS DOCUMENT, AND THE IDEAS AND DESIGNS INCORPORATED HEREIN, AS AN INSTRUMENT OF PROFESSIONAL SERVICE, IS THE PROPERTY OF CH2M HILL AND IS NOT TO BE USED, IN WHOLE OR IN PART, FOR ANY OTHER PROJECT WITHOUT THE WRITTEN AUTHORIZATION OF CH2MHILL.

3011 SW WILLISTON RD
GAINESVILLE, FLORIDA 32608
EB0000072 AAC001992
Richard Thomas Morrison PE 67713

SOLID WASTE SYSTEM
UPGRADE DESIGN
PASCO COUNTY
PASCO COUNTY, FLORIDA

CH2MHILL

CIVIL
WEST PASCO SITE
GENERAL SITE LAYOUT

FLORIDA DEPARTMENT OF ENVIRONMENTAL PROTECTION
FEB 07 2011
SOUTHWEST DISTRICT TAMPA

PERMITTING SUBMITTAL

VERIFY SCALE
BAR IS ONE INCH ON ORIGINAL DRAWING.
0 1"

DATE	FEBRUARY 2011
PROJ	378217
DWG	05-C-101
SHEET	

NDM SERVER: GNV FILENAME: dn05C101_378217.dgn PLOT DATE: 2/2/2011 PLOT TIME: 3:42:33 PM

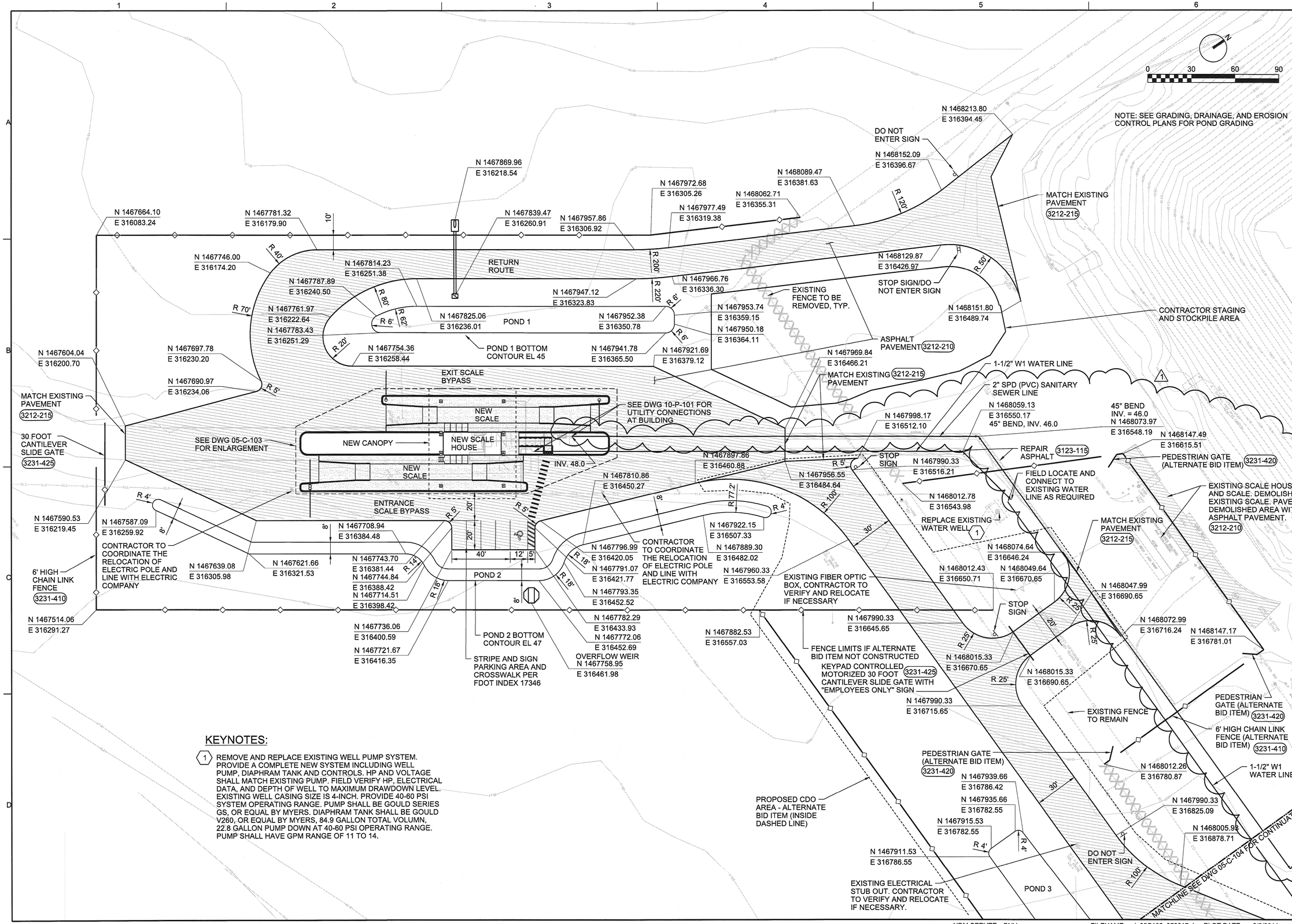

KEYNOTES:

1. REMOVE AND REPLACE EXISTING WELL PUMP SYSTEM. PROVIDE A COMPLETE NEW SYSTEM INCLUDING WELL PUMP, DIAPHRAM TANK AND CONTROLS. HP AND VOLTAGE SHALL MATCH EXISTING PUMP. FIELD VERIFY HP, ELECTRICAL DATA, AND DEPTH OF WELL TO MAXIMUM DRAWDOWN LEVEL. EXISTING WELL CASING SIZE IS 4-INCH. PROVIDE 40-60 PSI SYSTEM OPERATING RANGE. PUMP SHALL BE GOULD SERIES GS, OR EQUAL BY MYERS. DIAPHRAM TANK SHALL BE GOULD V260, OR EQUAL BY MYERS, 84.9 GALLON TOTAL VOLUMN, 22.8 GALLON PUMP DOWN AT 40-60 PSI OPERATING RANGE. PUMP SHALL HAVE GPM RANGE OF 11 TO 14.

NO.	DATE	DSGN	DR	CHK	APVD	BY	APVD
1	9/20/10	R MORRISON	R MORRISON	C KOHLER	R MORRISON	RM	RB

FDEP REVIEW COMMENTS

REVISION

©CH2M HILL 2010. ALL RIGHTS RESERVED.
THIS DESIGN INCORPORATED HEREIN AS AN INSTRUMENT OF PROFESSIONAL SERVICE, IS THE PROPERTY OF CH2M HILL AND IS NOT TO BE USED, IN WHOLE OR IN PART, FOR ANY OTHER PROJECT WITHOUT THE WRITTEN AUTHORIZATION OF CH2MHILL.

3011 SW WINSTON RD
GAINESVILLE, FLORIDA 32608
EB0000072 AAC001992
Richard Thomas Morrison PE 67713

SOLID WASTE SYSTEM
UPGRADE DESIGN
PASCO COUNTY
PASCO COUNTY, FLORIDA

CIVIL
WEST PASCO SITE
SITE LAYOUT AND UTILITIES PLAN

CH2MHILL

FLORIDA DEPARTMENT OF ENVIRONMENTAL PROTECTION
FEB 07 2011
SOUTHWEST DISTRICT TAMPA

VERIFY SCALE
BAR IS ONE INCH ON ORIGINAL DRAWING.
0 1"

DATE	FEBRUARY 2011
PROJ	378217
DWG	05-C-102
SHEET	

PERMITTING SUBMITTAL

REUSE OF DOCUMENTS: THIS DOCUMENT AND THE IDEAS AND DESIGNS INCORPORATED HEREIN, AS AN INSTRUMENT OF PROFESSIONAL SERVICE, IS THE PROPERTY OF CH2M HILL AND IS NOT TO BE USED, IN WHOLE OR IN PART, FOR ANY OTHER PROJECT WITHOUT THE WRITTEN AUTHORIZATION OF CH2MHILL.

NDM SERVER: GNV FILENAME: dn05C102_378217.dgn PLOT DATE: 2/2/2011 PLOT TIME: 3:43:48 PM

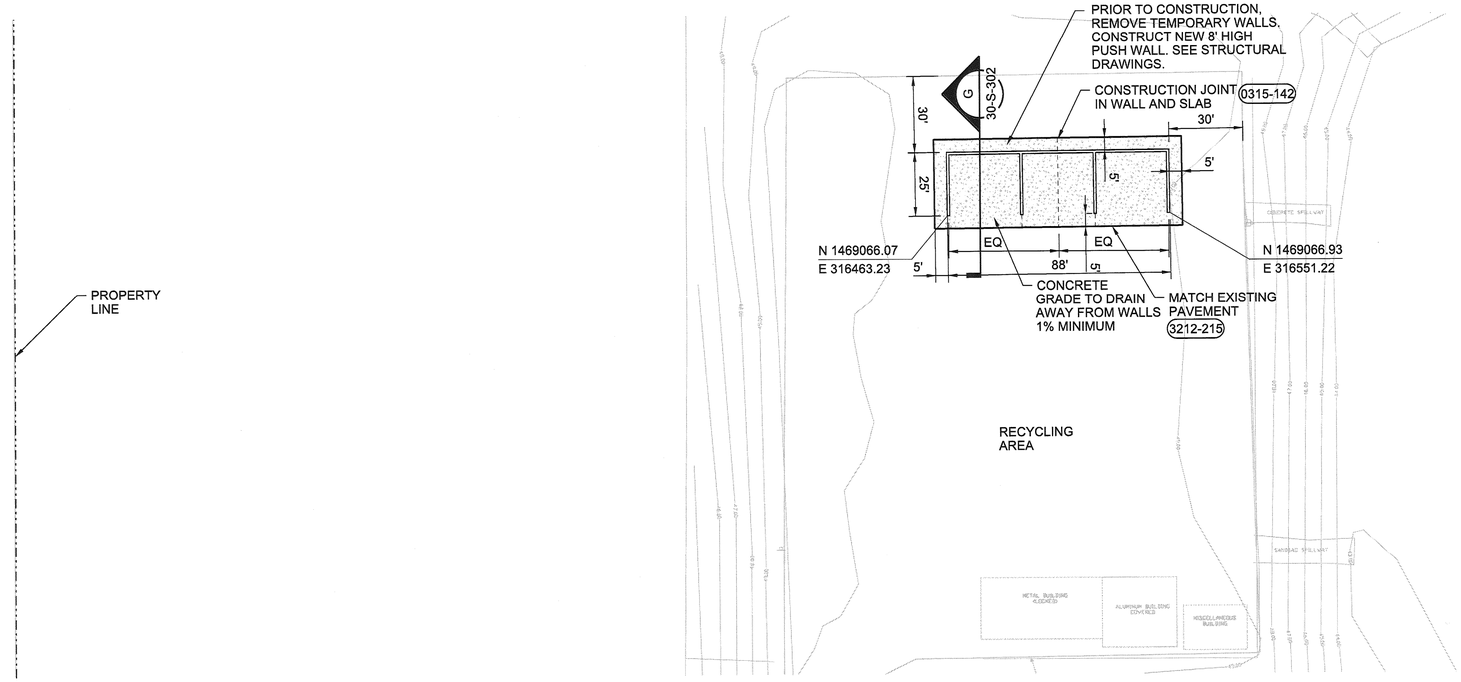

RECYCLING AREA

NOTE:
CONTRACTOR TO PROVIDE TEMPORARY SCRAP METAL STORAGE AND PROCURING AREA. USE AN OPEN AREA 20' X 60' WITH JERSEY BARRIERS .

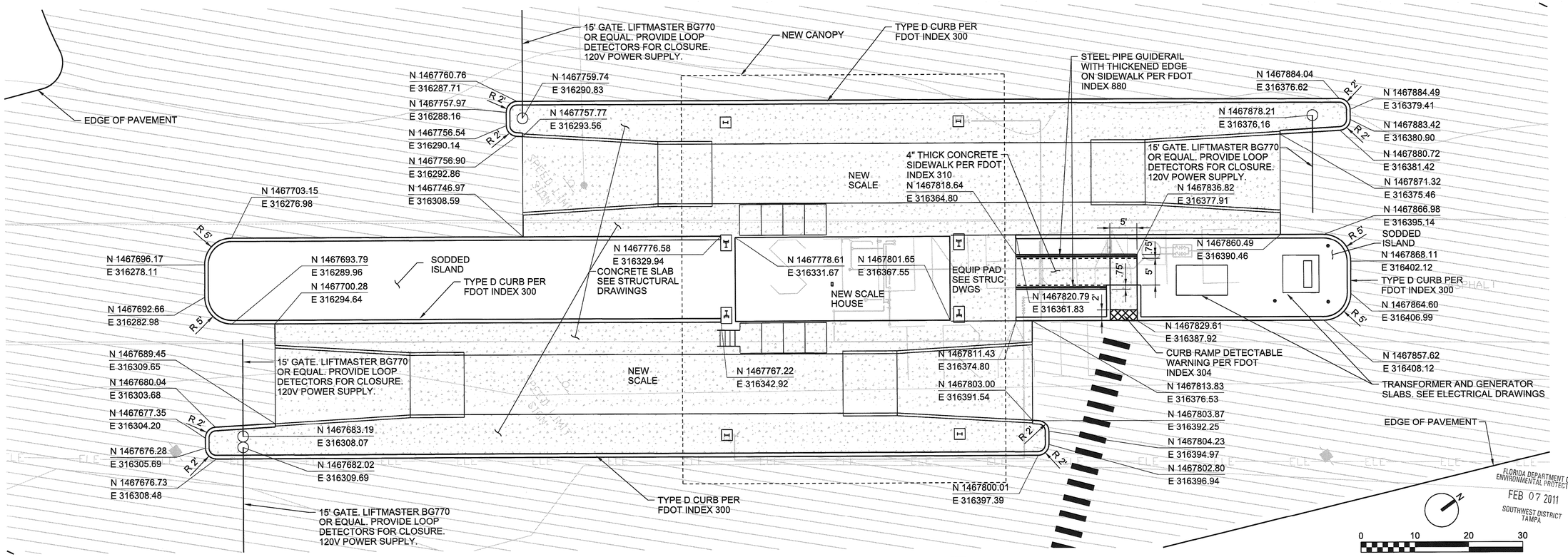

SCALEHOUSE ENLARGEMENT

NO.	DATE	DSGN	DR	CHK	APVD	BY	REVISION
		R.MORRISON	R.MORRISON	C.KOHLER	R.MORRISON	APVD	

3011 SW WILLISTON RD
GAINESVILLE, FLORIDA 32608
EB0000072 AAC001992
Richard Thomas Morrison PE 67713

SOLID WASTE SYSTEM
UPGRADE DESIGN
PASCO COUNTY
PASCO COUNTY, FLORIDA

CH2MHILL
CIVIL
WEST PASCO SITE
SITE LAYOUT AND UTILITIES PLAN

VERIFY SCALE
BAR IS ONE INCH ON ORIGINAL DRAWING.
0 1"

DATE	FEBRUARY 2011
PROJ	378217
DWG	05-C-103
SHEET	

PERMITTING SUBMITTAL

REUSE OF DOCUMENTS: THIS DOCUMENT, AND THE IDEAS AND DESIGNS INCORPORATED HEREIN, AS AN INSTRUMENT OF PROFESSIONAL SERVICE, IS THE PROPERTY OF CH2M HILL AND IS NOT TO BE USED, IN WHOLE OR IN PART, FOR ANY OTHER PROJECT WITHOUT THE WRITTEN AUTHORIZATION OF CH2MHILL.
©CH2M HILL 2010. ALL RIGHTS RESERVED.

NDM SERVER: GNV FILENAME: dn05C103_378217.dgn PLOT DATE: 2/2/2011 PLOT TIME: 3:45:00 PM

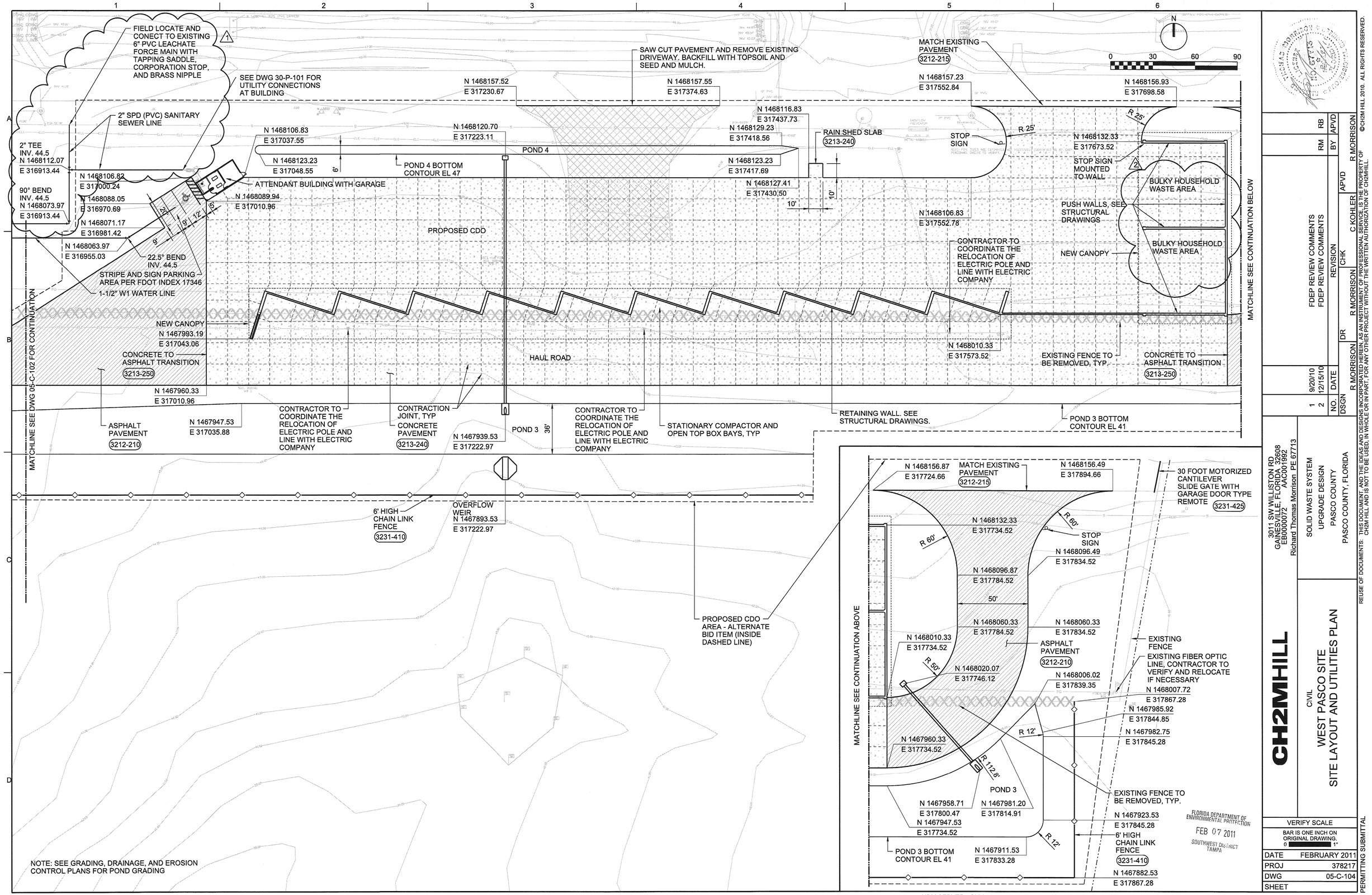

NO.	DATE	DSGN	DR	CHK	APVD	BY
1	9/20/10	R MORRISON	R MORRISON	C KOHLER	R MORRISON	RM
2	12/15/10					RB

1 FDEP REVIEW COMMENTS
2 FDEP REVIEW COMMENTS

CH2MHILL
3011 SW WILLISTON RD.
GAINESVILLE, FLORIDA 32608
EB0000072 AAC001992
Richard Thomas Morrison PE 67713

SOLID WASTE SYSTEM
UPGRADE DESIGN
PASCO COUNTY
PASCO COUNTY, FLORIDA

CIVIL
WEST PASCO SITE
SITE LAYOUT AND UTILITIES PLAN

VERIFY SCALE
BAR IS ONE INCH ON ORIGINAL DRAWING.
0 1"

DATE	FEBRUARY 2011
PROJ	378217
DWG	05-C-104
SHEET	

PERMITTING SUBMITTAL

REUSE OF DOCUMENTS: THIS DOCUMENT, AND THE IDEAS AND DESIGNS INCORPORATED HEREIN, AS AN INSTRUMENT OF PROFESSIONAL SERVICE, IS THE PROPERTY OF CH2M HILL AND IS NOT TO BE USED, IN WHOLE OR IN PART, FOR ANY OTHER PROJECT WITHOUT THE WRITTEN AUTHORIZATION OF CH2MHILL.
©CH2M HILL 2010. ALL RIGHTS RESERVED.

N 1467942.48
E 316094.63

N 1467964.40
E 316110.39

N 1468252.80
E 316351.23

N 1468064.02
E 316350.32

N 1467662.97
E 316076.26

N 1467855.84
E 316215.04

N 1467877.76
E 316230.81

N 1467975.36
E 316301.04

N 1467588.05
E 316180.14

N 1467567.40
E 316208.77

N 1467507.08
E 316292.40

N 1467877.53
E 316559.59

N 1468007.43
E 316653.27

N 1468007.21
E 316797.04

SILT FENCE (TYP)
3125-163

MES PER FDOT
INDEX 272
INV=45.00

43' - 18" RCP @ 0.23%

RETURN
ROUTE

TYPE "C" INLET PER
FDOT INDEX 232

POND 1

POND 2

POND 3

EXIT SCALE
BYPASS

NEW
SCALE

NEW SCALE
HOUSE
FFE = 53.00

ENTRANCE
SCALE BYPASS

PARKING
AREA

5' X 5' LEVEL LANDING
EL 51.55

50.5 TOC
50.0 EOP

51.5 TOC
51.0 EOP

MATCH EXISTING
PAVEMENT GRADES

CONTRACTOR STAGING
AND STOCKPILE AREA.
REMOVE ALL STOCKPILES
AFTER CONSTRUCTION IS
COMPLETE.

DEMOLISH SCALES AND
PAVE AREA. GRADE NEW
PAVEMENT TO DRAIN.

SILT FENCE LIMITS
IF ALTERNATE BID
ITEM NOT CONSTRUCTED

OVERFLOW WEIR

CENTERLINE
SWALE

PROPOSED CDO
AREA - ALTERNATE
BID ITEM (INSIDE
DASHED LINE)

MATCHLINE SEE DWG 05-C-106 FOR CONTINUATION

05-C-501

05-C-502

0 30 60 90

©CH2M HILL 2010. ALL RIGHTS RESERVED.
THIS DOCUMENT, AND THE IDEAS AND DESIGNS INCORPORATED HEREIN, AS AN INSTRUMENT OF PROFESSIONAL SERVICE, IS THE PROPERTY OF CH2M HILL, AND IS NOT TO BE USED, IN WHOLE OR IN PART, FOR ANY OTHER PROJECT WITHOUT THE WRITTEN AUTHORIZATION OF CH2MHILL.
REUSE OF DOCUMENTS:

NO.	DATE	DSGN	DR	CHK	APVD	BY
		R MORRISON	R MORRISON	C.KOHLER	APVD	R MORRISON

REVISION

CH2MHILL
3011 SW WILLISTON RD
GAINESVILLE, FLORIDA 32608
EB0000072 AAC001992
Richard Thomas Morrison PE 67713

SOLID WASTE SYSTEM
UPGRADE DESIGN
PASCO COUNTY
PASCO COUNTY, FLORIDA

CIVIL
WEST PASCO SITE
GRADING, DRAINAGE, AND
EROSION CONTROL PLAN

FLORIDA DEPARTMENT OF ENVIRONMENTAL PROTECTION
FEB 07 2011
SOUTHWEST DISTRICT
TAMPA

PERMITTING SUBMITTAL

VERIFY SCALE
BAR IS ONE INCH ON ORIGINAL DRAWING
0 1"

DATE	FEBRUARY 2011
PROJ	378217
DWG	05-C-105
SHEET	

1 2 3 4 5 6

A B C D

MATCH EXISTING PAVEMENT GRADES

N

0 30 60 90

H 05-C-502

TYPE "C" INLET PER FDOT INDEX 232

CENTERLINE SWALE

POND 4

ATTENDANT BUILDING FFE = 50.1

PARKING AREA

RAIN SHED

RECYCLE BOX AREA

RECYCLE BOX AREA

172' - 18" RCP @ 0.58%

PROPOSED CDO

RETAINING WALL

HAUL ROAD

STATIONARY COMPACTORS AND OPEN TOP BOX BAYS, TYP

MATCHLINE FOR CONTINUATION SEE BELOW

MATCHLINE FOR CONTINUATION SEE DWG 05-C-105 FOR CONTINUATION

MES PER FDOT INDEX 272 INV=39.0

POND 3

K 05-C-502

OVERFLOW WEIR

N 1467877.53
E 317212.38

N 1467877.53
E 317232.69

SILT FENCE (TYP) 3125-163

L 05-C-502

N 1467824.68
E 317212.38

N 1467824.68
E 317232.69

CENTERLINE SWALE

PROPOSED CDO AREA - ALTERNATE BID ITEM (INSIDE DASHED LINE)

MATCHLINE FOR CONTINUATION SEE ABOVE

MATCH EXISTING PAVEMENT GRADES

J 05-C-502

N 1468096.49
E 317872.28

CENTERLINE SWALE

PROPERTY LINE

TYPE "C" INLET WITH STANDARD 1 FOOT NON TRAVERSABLE SLOT PER FDOT INDEX 232. SLOT SHALL BE ON NE SIDE.
TOP = 44.0
INV = 40.7

74' -18" RCP @2.30%

MES PER FDOT INDEX 272 INV=39.0

POND 3

SILT FENCE (TYP) 3125-163

FLORIDA DEPARTMENT OF ENVIRONMENTAL PROTECTION
FEB 07 2011
SOUTHWEST DISTRICT TAMPA

N 1467877.53
E 317232.28

NO.	DATE	DSGN
		R MORRISON
	REVISION	DR
		R MORRISON
		CHK
		C KOHLER
		APVD
		R MORRISON
		BY
		APVD

©CH2M HILL 2010. ALL RIGHTS RESERVED.
THIS DOCUMENT, AND THE IDEAS AND DESIGNS INCORPORATED HEREIN, AS AN INSTRUMENT OF PROFESSIONAL SERVICE, IS THE PROPERTY OF CH2M HILL AND IS NOT TO BE USED, IN WHOLE OR IN PART, FOR ANY OTHER PROJECT WITHOUT THE WRITTEN AUTHORIZATION OF CH2MHILL.

3011 SW WILLISTON RD.
GAINESVILLE, FL. 32608
EB0000072 AAC001992
Richard Thomas Morrison PE 67713

SOLID WASTE SYSTEM
UPGRADE DESIGN
PASCO COUNTY
PASCO COUNTY, FLORIDA

CH2MHILL

CIVIL

WEST PASCO SITE GRADING, DRAINAGE, AND EROSION CONTROL PLAN

REUSE OF DOCUMENTS: THIS DOCUMENT, AND THE IDEAS AND DESIGNS INCORPORATED HEREIN, AS AN INSTRUMENT OF PROFESSIONAL SERVICE, IS THE PROPERTY OF CH2M HILL AND IS NOT TO BE USED, IN WHOLE OR IN PART, FOR ANY OTHER PROJECT WITHOUT THE WRITTEN AUTHORIZATION OF CH2MHILL.

PERMITTING SUBMITTAL

VERIFY SCALE

BAR IS ONE INCH ON ORIGINAL DRAWING.
0 1"

DATE	FEBRUARY 2011
PROJ	378217
DWG	05-C-106
SHEET	

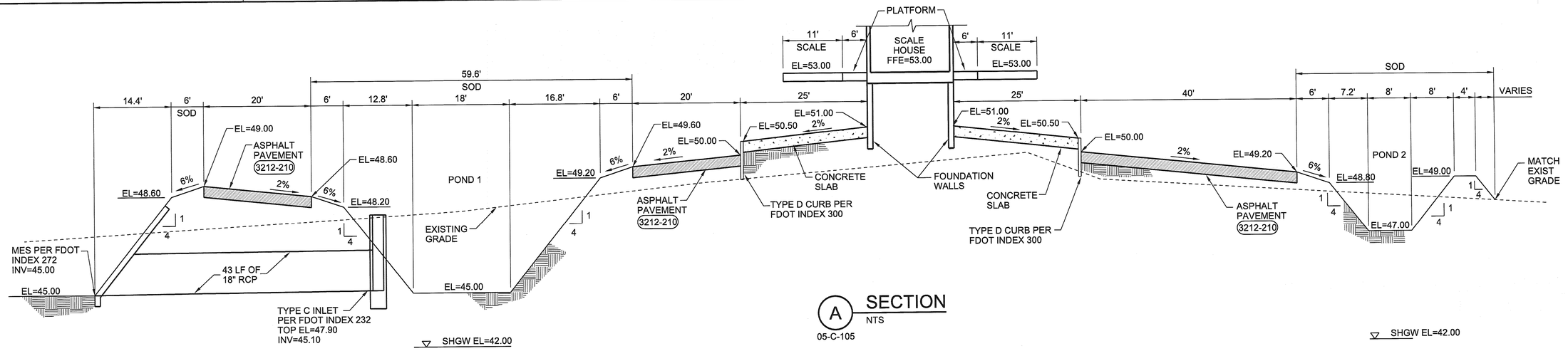

A SECTION
NTS
05-C-105

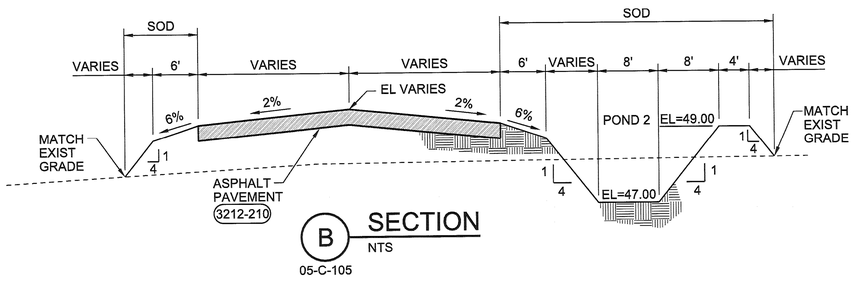

B SECTION
NTS
05-C-105

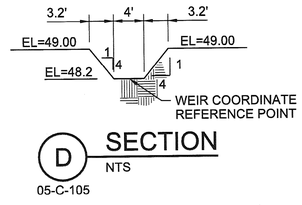

D SECTION
NTS
05-C-105

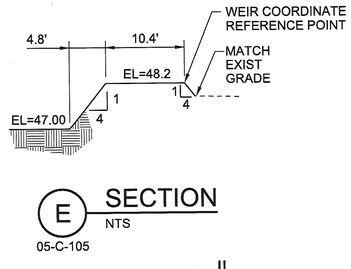

E SECTION
NTS
05-C-105

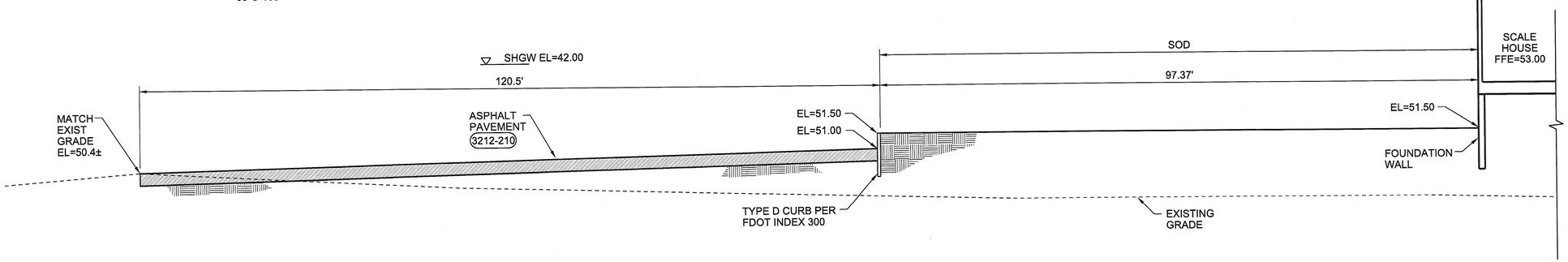

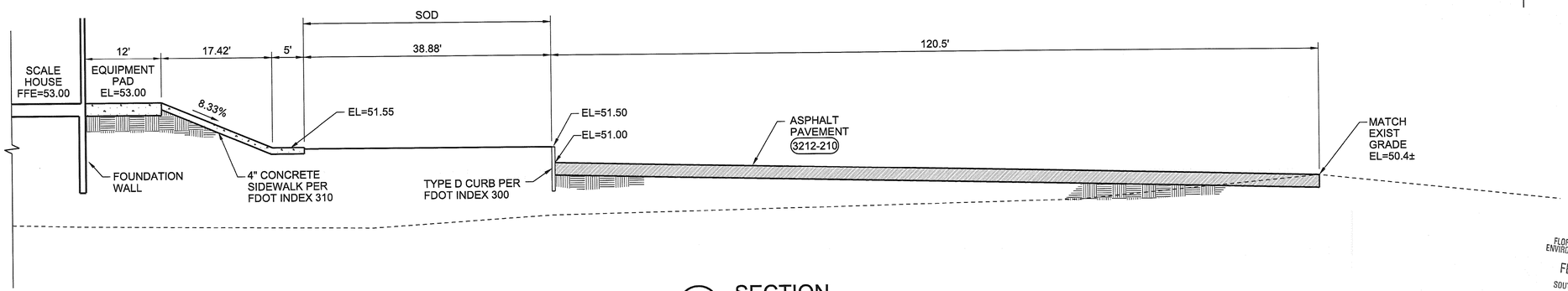

C SECTION
NTS
05-C-105

FLORIDA DEPARTMENT OF ENVIRONMENTAL PROTECTION
FEB 07 2011
SOUTHWEST DISTRICT TAMPA

©CH2M HILL 2010. ALL RIGHTS RESERVED.
THIS DOCUMENT, AND THE IDEAS AND DESIGNS INCORPORATED HEREIN, AS AN INSTRUMENT OF PROFESSIONAL SERVICE, IS THE PROPERTY OF CH2M HILL AND IS NOT TO BE USED, IN WHOLE OR IN PART, FOR ANY OTHER PROJECT WITHOUT THE WRITTEN AUTHORIZATION OF CH2M HILL
REUSE OF DOCUMENTS:

NO.	DATE	DSGN	DR	CHK	APVD	BY
REVISION		R MORRISON	R MORRISON	C KOHLER	APVD	R MORRISON

CH2MHILL
3011 SW WILLISTON RD
GAINESVILLE, FLORIDA 32608
EB0000072 AAC001992
Richard Thomas Morrison PE 67713

SOLID WASTE SYSTEM
UPGRADE DESIGN
PASCO COUNTY
PASCO COUNTY, FLORIDA

CIVIL
WEST PASCO SITE
SECTIONS

PERMITTING SUBMITTAL

VERIFY SCALE
BAR IS ONE INCH ON ORIGINAL DRAWING.
0 1"

DATE	FEBRUARY 2011
PROJ	378217
DWG	05-C-501
SHEET	

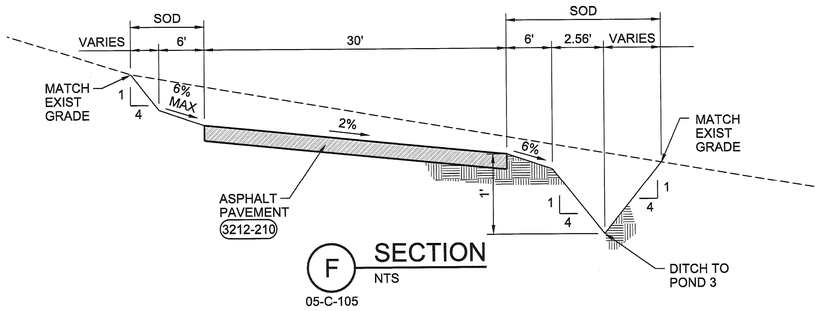

F SECTION
NTS
05-C-105

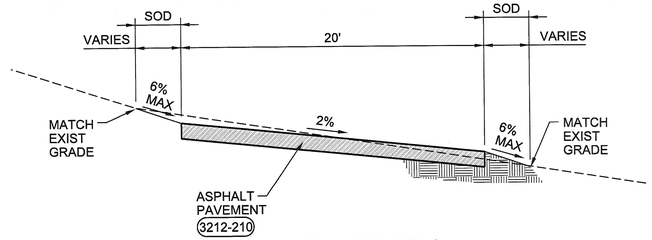

G SECTION
NTS
05-C-105

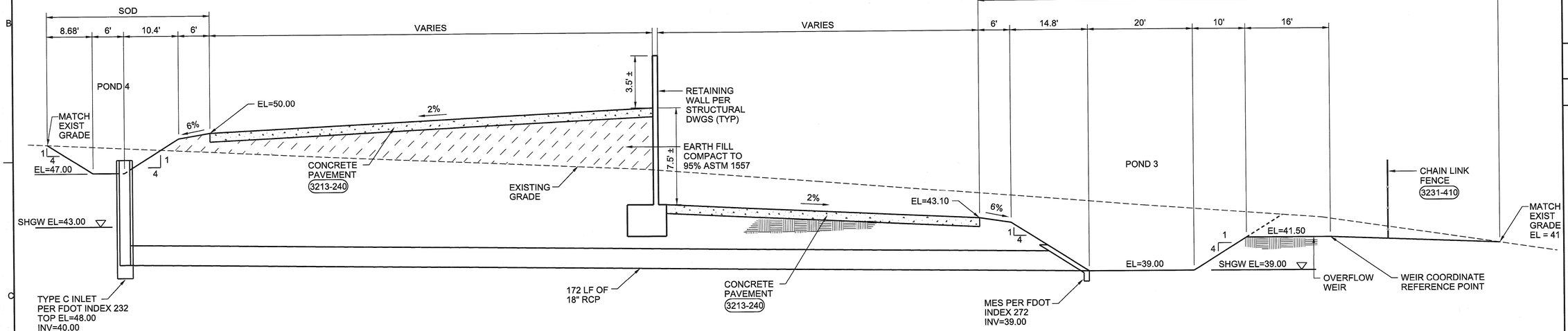

H SECTION
NTS
05-C-106

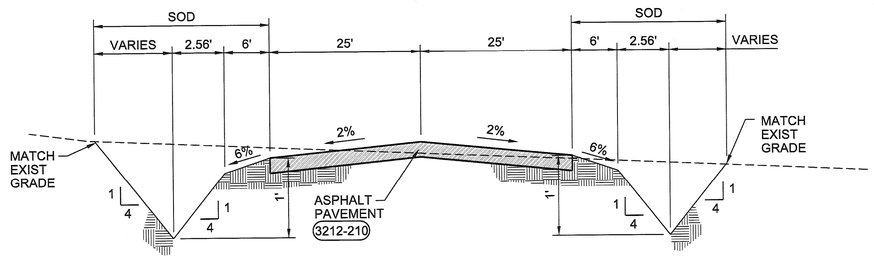

J SECTION
NTS
05-C-106

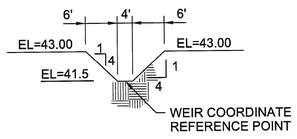

K SECTION
NTS
05-C-106

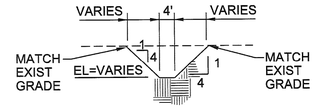

L SECTION
NTS
05-C-106

FLORIDA DEPARTMENT OF ENVIRONMENTAL PROTECTION
FEB 07 2011
SOUTHWEST DISTRICT TAMPA

©CH2M HILL 2010. ALL RIGHTS RESERVED.
IDEAS AND DESIGNS INCORPORATED HEREIN, AS AN INSTRUMENT OF PROFESSIONAL SERVICE, IS THE PROPERTY OF CH2M HILL AND IS NOT TO BE USED, IN WHOLE OR IN PART, FOR ANY OTHER PROJECT WITHOUT THE WRITTEN AUTHORIZATION OF CH2MHILL.
REUSE OF DOCUMENTS: THIS DOCUMENT, AND THE IDEAS AND DESIGNS INCORPORATED HEREIN, AS AN INSTRUMENT OF PROFESSIONAL SERVICE, IS THE PROPERTY OF CH2M HILL AND IS NOT TO BE USED, IN WHOLE OR IN PART, FOR ANY OTHER PROJECT WITHOUT THE WRITTEN AUTHORIZATION OF CH2MHILL.

NO.	DATE	DSGN	DR	CHK	APVD	BY	APVD
REVISION		R MORRISON	R MORRISON	C KOHLER			R MORRISON

CH2MHILL
3011 SW WILLISTON RD
GAINESVILLE, FLORIDA 32608
EB0000072 AAC001992
Richard Thomas Morrison, PE 67713

SOLID WASTE SYSTEM
UPGRADE DESIGN
PASCO COUNTY
PASCO COUNTY, FLORIDA

CIVIL
WEST PASCO SITE
SECTIONS

VERIFY SCALE
BAR IS ONE INCH ON ORIGINAL DRAWING.
0 1"

DATE	FEBRUARY 2011
PROJ	378217
DWG	05-C-502
SHEET	

PERMITTING SUBMITTAL

NDM SERVER: GNV FILENAME: dn05C502_378217.dgn PLOT DATE: 2/2/2011 PLOT TIME: 3:43:14 PM

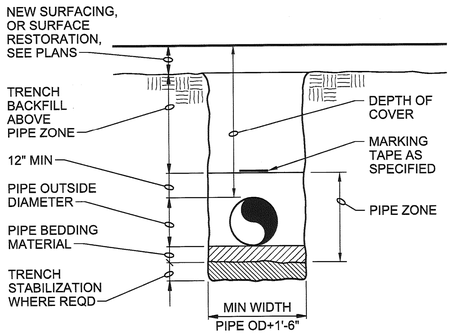

TYPICAL TRENCH

NTS

3123-110

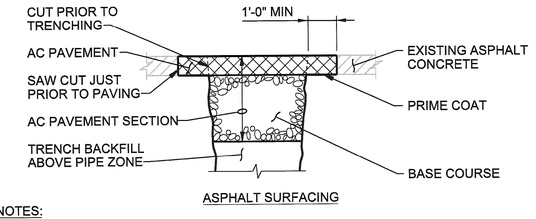

NOTES:

1. IF LOCATION OF TRENCH SAW CUT IS WITHIN 2 FEET OF AN EXISTING JOINT OR EDGE OF CONCRETE, REPLACE ENTIRE CONCRETE TO THE JOINT OR EDGE.
2. CONSTRUCT JOINTS ACROSS NEW CONCRETE TO MATCH EXISTING JOINT TYPES AND LOCATIONS.

SURFACE RESTORATION

NTS

3123-115

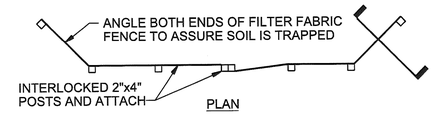

NOTES:

1. SILT FENCE SHALL BE IN ACCORDANCE WITH FDOT INDEX 102, TYPE III SILT FENCE.
2. BURY BOTTOM OF FILTER FABRIC 6" VERTICALLY BELOW FINISHED GRADE AND COMPACT.
3. 2"x4" WOOD OR STEEL FENCE POSTS.
4. STITCHED LOOPS TO BE INSTALLED DOWNHILL SIDE OF SLOPE.

SILT FENCE

NTS

3125-163

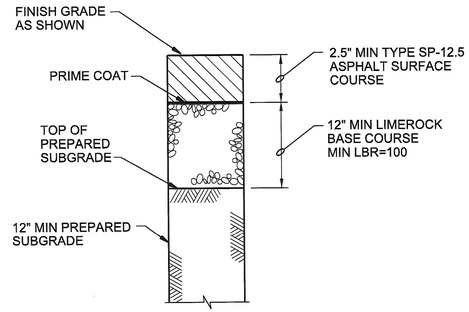

ASPHALT CONCRETE PAVEMENT

NTS

3212-210

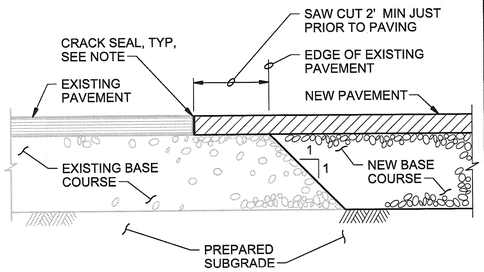

NOTE:

PAINT EDGE OF EXISTING ASPHALT WITH TACK COAT PRIOR TO ASPHALT PAVING. CRACK SEAL JOINT AFTER PAVING OPERATION HAS BEEN COMPLETED.

PAVEMENT CONNECTION

NTS

3212-215

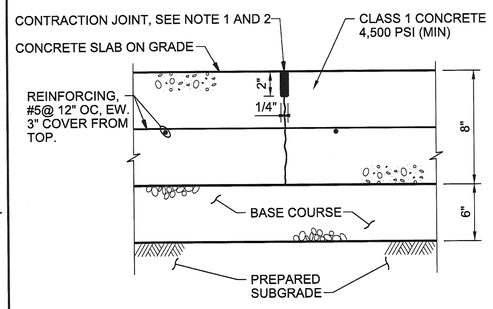

NOTES:

1. CONTRACTION JOINT SHALL BE MADE, CLEANED WITH COMPRESSED AIR, AND FILLED WITH SEALANT AS SPECIFIED.
2. CONCRETE JOINT SPACING: AS SHOWN OR MAXIMUM 15' X 15'.
3. INSTALL 1/2" PREMOLDED JOINT FILLER FULL DEPTH WHERE CONCRETE PAVEMENT ABUTS CONCRETE CURB, BUILDING OR ANY RIGID STRUCTURE.
4. PROVIDE A 12" THICK BY 18" WIDE THICKENED EDGE AROUND PERIMETER OF SLAB. TRANSITION THICKENED EDGE TO NORMAL 8" THICKNESS IN 18".

CONCRETE PAVEMENT

NTS

3213-240

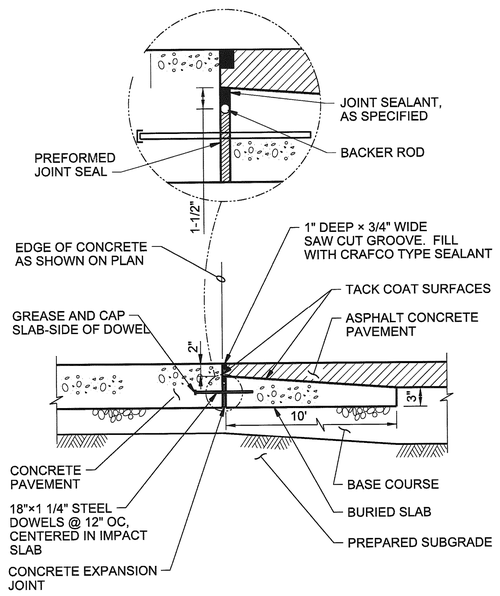

CONCRETE TO ASPHALT TRANSITION

NTS

3213-250

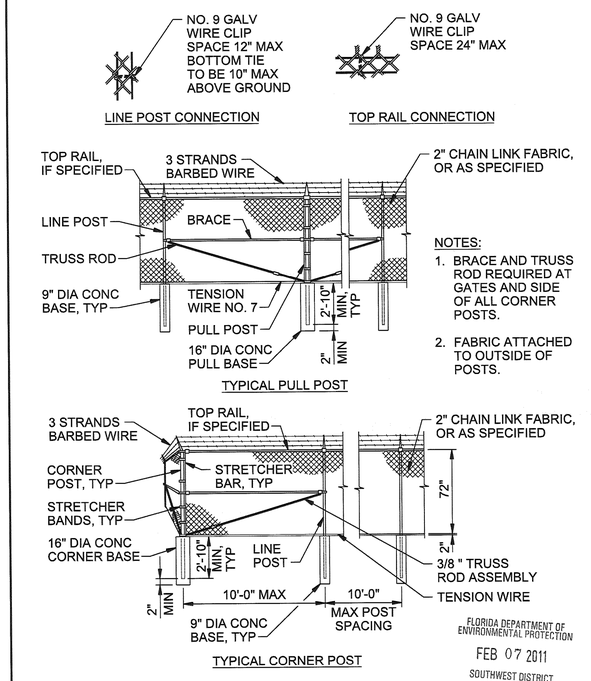

FLORIDA DEPARTMENT OF ENVIRONMENTAL PROTECTION
FEB 07 2011
SOUTHWEST DISTRICT TAMPA

CHAIN LINK FENCE

NTS

3231-410

©CH2M HILL 2010. ALL RIGHTS RESERVED.
REUSE OF DOCUMENTS: THIS DOCUMENT, AND THE IDEAS AND DESIGNS INCORPORATED HEREIN, AS AN INSTRUMENT OF PROFESSIONAL SERVICE, IS THE PROPERTY OF CH2M HILL AND IS NOT TO BE USED, IN WHOLE OR IN PART, FOR ANY OTHER PROJECT WITHOUT THE WRITTEN AUTHORIZATION OF CH2MHILL.

NO.	DATE	DSGN	DR	CHK	APVD	BY	REVISION
		R MORRISON	R MORRISON	C KOHLER	APVD	R MORRISON	

3011 SW WILLISTON RD
GAINESVILLE, FLORIDA 32608
EB00000072 AA000027
Richard Thomas Morrison PE 67713

SOLID WASTE SYSTEM
UPGRADE DESIGN
PASCO COUNTY
PASCO COUNTY, FLORIDA

CH2MHILL

CIVIL
WEST PASCO SITE
DETAILS

VERIFY SCALE
BAR IS ONE INCH ON ORIGINAL DRAWING.
0 1"

DATE	FEBRUARY 2011
PROJ	378217
DWG	05-C-503
SHEET	

PERMITTING SUBMITTAL

NDM SERVER: GNV FILENAME: dn05C503_378217.dgn PLOT DATE: 2/2/2011 PLOT TIME: 3:44:17 PM

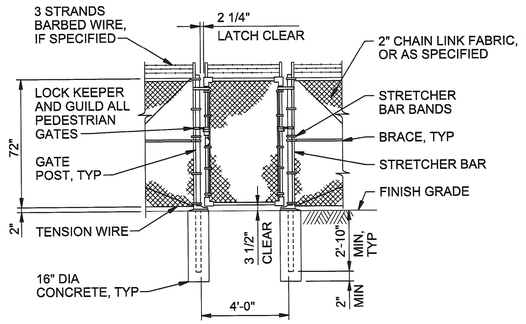

PEDESTRIAN GATE

NTS

3231-420

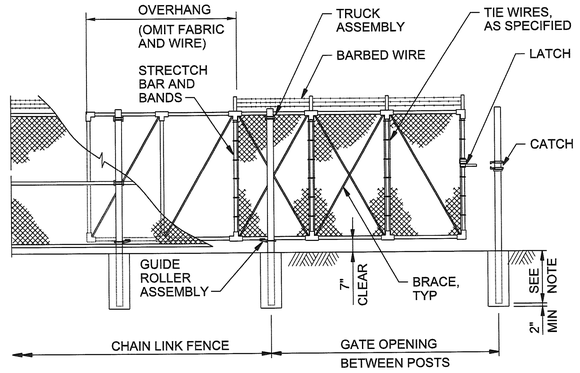

NOTE:

POST SETS PER MANUFACTURER'S RECOMMENDATIONS FOR GATE OPENING AND GATE POST SIZES.

CANTILEVER SLIDE GATE

NTS

3231-425

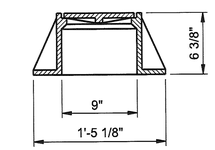

CLEANOUT FRAME AND COVER

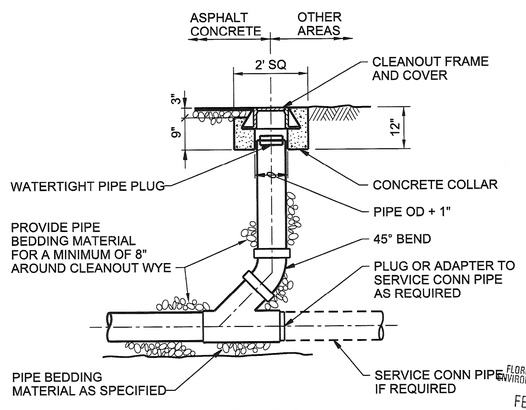

CLEANOUT

EXTERIOR CLEANOUT

NTS

3305-740

FLORIDA DEPARTMENT OF ENVIRONMENTAL PROTECTION
FEB 07 2011
SOUTHWEST DISTRICT TAMPA

NO.	DATE	REVISION	BY	APVD
1	9/20/10	FDEP REVIEW COMMENTS	RM	RB

DSGN R MORRISON | DR R MORRISON | CHK C KOHLER | APVD R MORRISON

3011 SW WILLISTON RD
GAINESVILLE, FLORIDA 32608
EB0000072 AAC001992
Richard Thomas Morrison PE 67713

SOLID WASTE SYSTEM
UPGRADE DESIGN
PASCO COUNTY
PASCO COUNTY, FLORIDA

CH2MHILL

CIVIL
WEST PASCO SITE DETAILS

VERIFY SCALE
BAR IS ONE INCH ON ORIGINAL DRAWING.
0 1"

DATE	FEBRUARY 2011
PROJ	378217
DWG	05-C-504
SHEET	

PERMITTING SUBMITTAL

REUSE OF DOCUMENTS: THIS DOCUMENT, AND THE IDEAS AND DESIGNS INCORPORATED HEREIN, AS AN INSTRUMENT OF PROFESSIONAL SERVICE, IS THE PROPERTY OF CH2M HILL AND IS NOT TO BE USED, IN WHOLE OR IN PART, FOR ANY OTHER PROJECT WITHOUT THE WRITTEN AUTHORIZATION OF CH2MHILL.
©CH2M HILL 2010. ALL RIGHTS RESERVED.

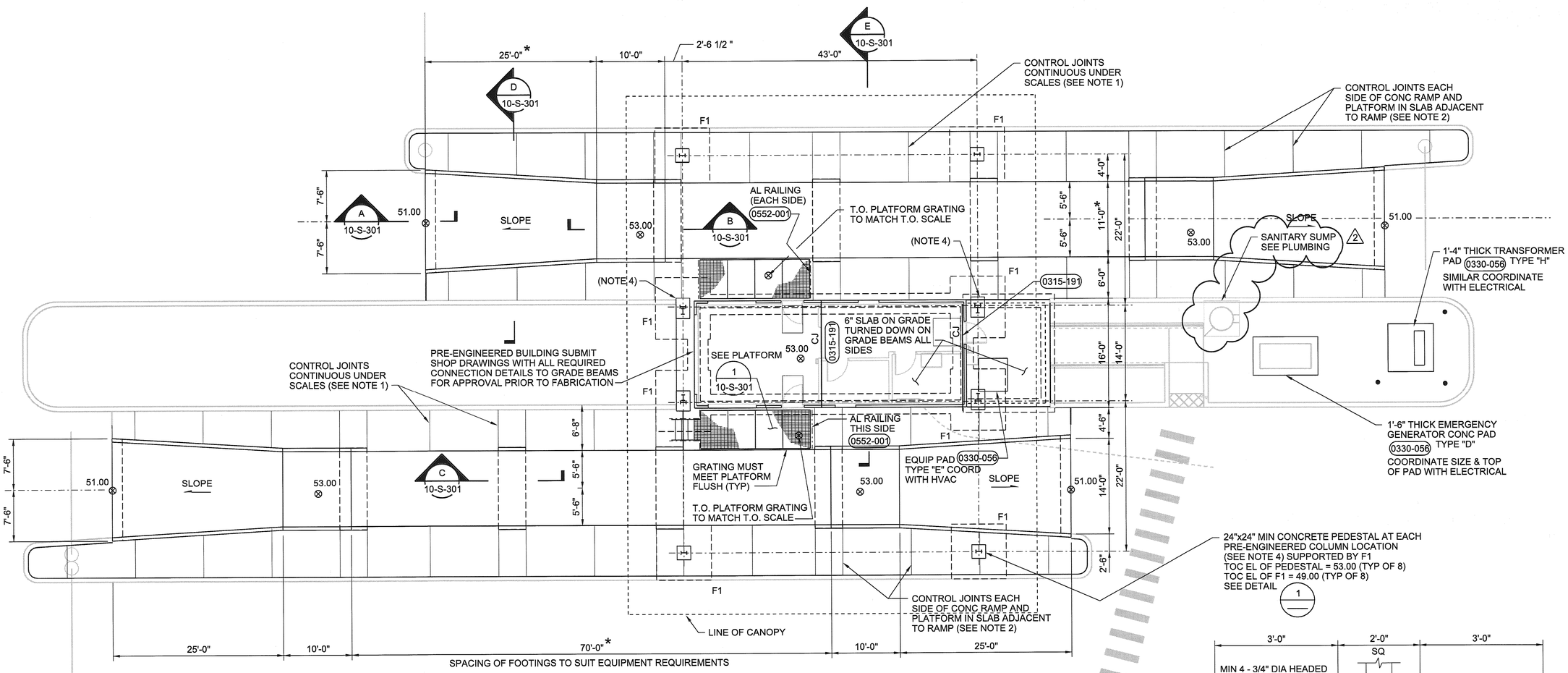

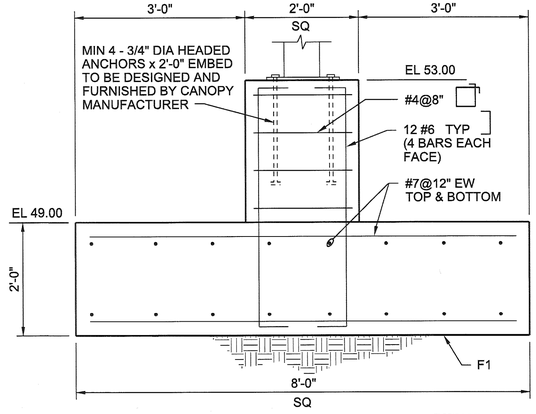

NOTES:

1. PROVIDE CONTROL JOINTS IN SLAB ON GRADE AT 15'-0" CENTERED EACH DIRECTION PER 0315-191 OR 0315-192 AT CONTRACTORS OPTION. SUBMIT JOINT LAYOUT FOR REVIEW PRIOR TO CONSTRUCTION
2. PROVIDE CONTROL JOINTS IN SLAB ON GRADE AT 10'-0" MAX SPACING PER 0315-191 OR 0315-192 AT CONTRACTORS OPTION.
3. SEE CIVIL FOR ELEVATIONS AND SLOPES OF 4" THICK WASHOUT SLAB.
4. AT PORTAL FRAME LOCATIONS COORDINATE PEDESTAL SIZE AND REQUREMENT WITH PRE-ENGINEERED CONOPY SHOP DRAWINGS AND MODIFY AS REQUIRED WITH ADDITIONAL 2-#6 VERTICAL BARS FOR EVERY 6" INCREASE IN LENGTH.
5. VAPOR RETARDER TO BE INSTALLED BELOW BUILDING CONCRETE SLAB. SEE SECTION E, 10-S-301.
6. STAIR FROM SCALEHOUSE TO HAVE MAXIMUM 7" RISER AND 11" MINIMUM TREAD.
7. COAT ALL ALUMINUM IN CONTACT WITH GALV. STEEL WITH BITUMINOUS COATING AS SPECIFIED.

CANOPY AND SITE FOUNDATION PLAN

1/8"=1'-0"

0 8 16 24

1 DETAIL

3/4"=1'-0"

FLORIDA DEPARTMENT OF ENVIRONMENTAL PROTECTION
FEB 07 2011
SOUTHWEST DISTRICT TAMPA

NO.	DATE	DSGN	BY	CHK	APVD
2	2/2/11	M THUE	J PRUITT	M CHRZANOWSKI	M THUE

CLIENT COMMENTS
DESCRIPTION
REVISION

CHK APVR N
APV D

3011 SW WILLISTON RD
GAINESVILLE, FLORIDA 32608
EB00000072 AAC001992
Monrad R Thue PE 32071

SOLID WASTE SYSTEM
UPGRADE DESIGN
PASCO COUNTY
PASCO COUNTY, FLORIDA

CH2MHILL

STRUCTURAL
WEST PASCO SITE
SCALEHOUSE
CANOPY AND SITE FOUNDATION

VERIFY SCALE
BAR IS ONE INCH ON ORIGINAL DRAWING.
0 1"

DATE	FEBRUARY 2011
PROJ	378217
DWG	10-S-101
SHEET	

PERMITTING SUBMITTAL

REUSE OF DOCUMENTS: THIS DOCUMENT, AND THE IDEAS AND DESIGNS INCORPORATED HEREIN, AS AN INSTRUMENT OF PROFESSIONAL SERVICE, IS THE PROPERTY OF CH2M HILL AND IS NOT TO BE USED, IN WHOLE OR IN PART, FOR ANY OTHER PROJECT WITHOUT THE WRITTEN AUTHORIZATION OF CH2MHILL.
©CH2M HILL 2010. ALL RIGHTS RESERVED.

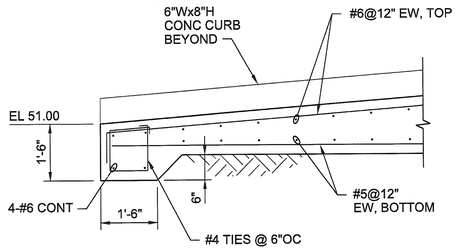

A SECTION
1/2"= 1'-0"

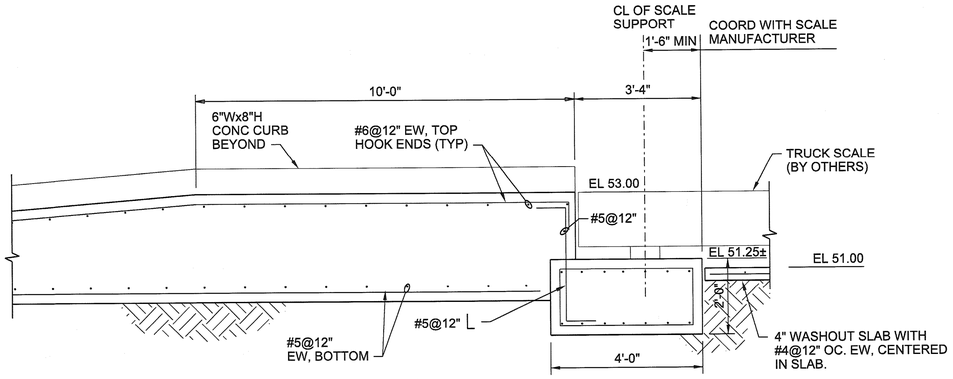

NOTE:
LENGTH OF 4'-0' WIDE FOOTING TO BE 13'-0" CENTERED ON SCALES.

B SECTION
1/2"= 1'-0"

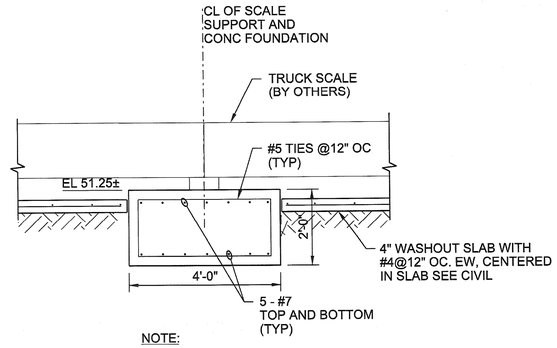

NOTE:
LENGTH OF FOOTING TO BE 13'-0" CENTERED ON SCALES.

C SECTION
1/2"= 1'-0"

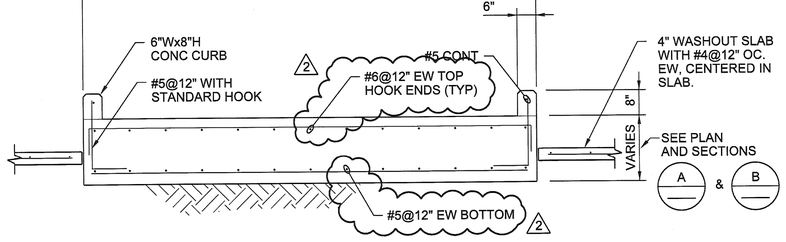

D SECTION
1/2"= 1'-0"

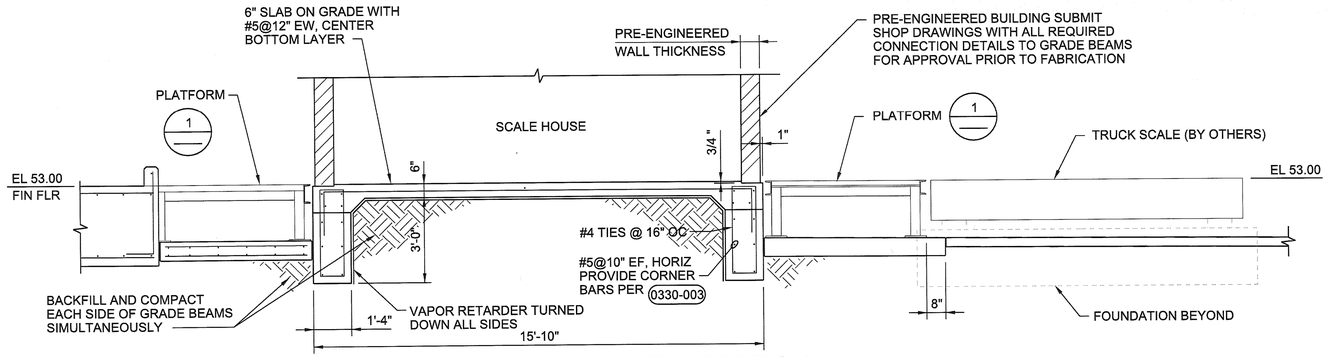

E SECTION
3/8"= 1'-0"

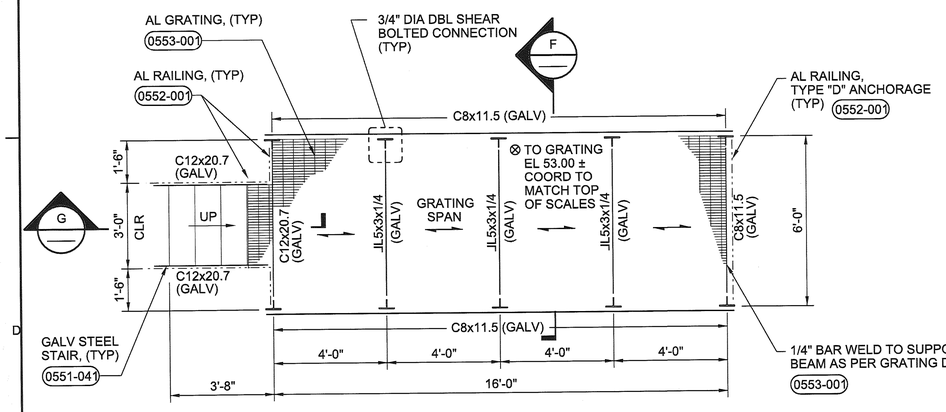

NOTE:
STAIR SHOWN IS ON SOUTH PLATFORM ONLY.

1 PLATFORM PLAN
3/8"= 1'-0"

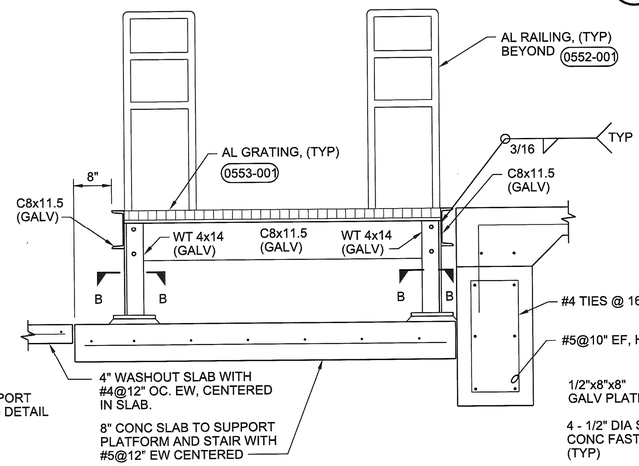

F SECTION
1/2"= 1'-0"

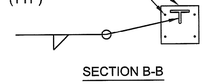

SECTION B-B

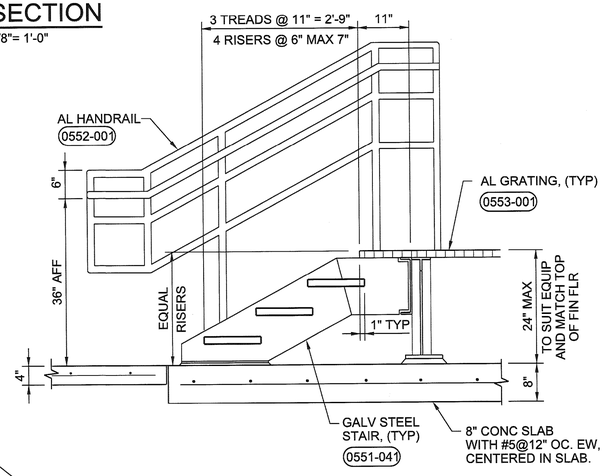

G SECTION
1/2"= 1'-0"

FLORIDA DEPARTMENT OF ENVIRONMENTAL PROTECTION
FEB 07 2011
SOUTHWEST DISTRICT TAMPA

STATE OF FLORIDA
NO. 32071
REGISTERED ENGINEER
M. THUE

NO.	DATE	DSGN	DR	CHK	APVD
2	2/2/11	M.THUE	J PRUITT	M.CHRZANOWSKI	M THUE
				CHK APVR	APV N
				BY	APVD

CLIENT COMMENTS
DESCRIPTION
REVISION

©CH2M HILL 2010. ALL RIGHTS RESERVED.
REUSE OF DOCUMENTS: THIS DOCUMENT AND THE IDEAS AND DESIGNS INCORPORATED HEREIN, AS AN INSTRUMENT OF PROFESSIONAL SERVICE, IS THE PROPERTY OF CH2MHILL AND IS NOT TO BE USED, IN WHOLE OR IN PART, FOR ANY OTHER PROJECT WITHOUT THE WRITTEN AUTHORIZATION OF CH2MHILL.

CH2MHILL
3011 SW WILLISTON RD
GAINESVILLE, FLORIDA 32608
EB0000072 AAC001992
Monrad R Thue PE 32071

SOLID WASTE SYSTEM
UPGRADE DESIGN
PASCO COUNTY
PASCO COUNTY, FLORIDA

STRUCTURAL
WEST PASCO SITE
SCALEHOUSE
SECTIONS AND DETAILS

PERMITTING SUBMITTAL

VERIFY SCALE
BAR IS ONE INCH ON ORIGINAL DRAWING.
0 1"

DATE	FEBRUARY 2011
PROJ	378217
DWG	10-S-301
SHEET	

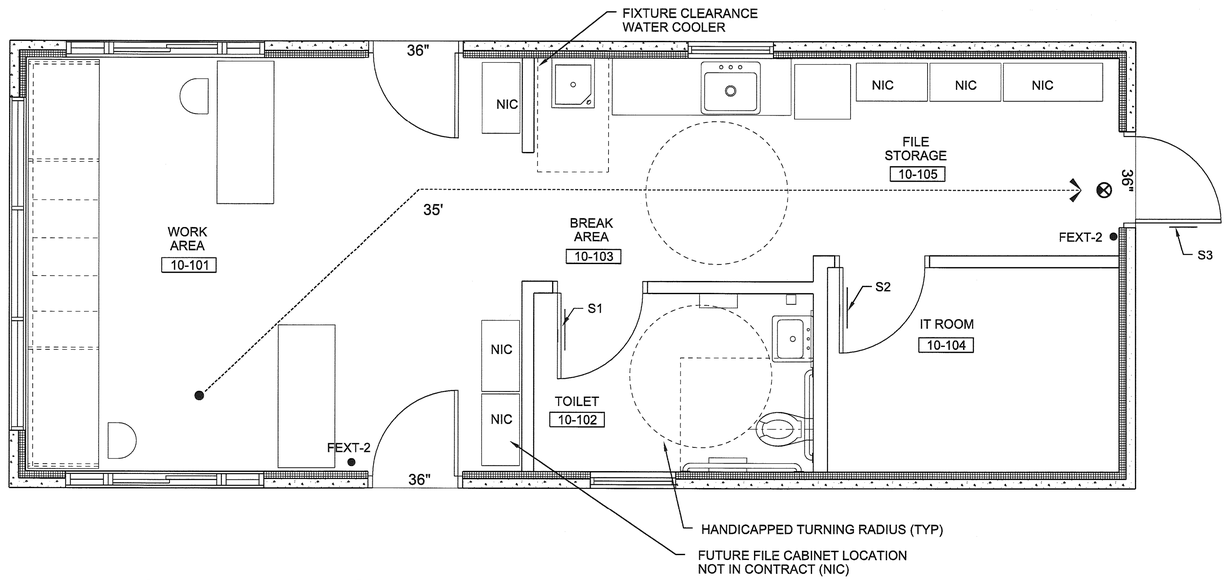

LIFE SAFETY PLAN

3/8"=1'-0"

N

0 1 2 3

3/8"=1'

GENERAL NOTES:

1. FOR SIGN INFORMATION AND TYPE DESCRIPTIONS SEE SPECIFICATIONS SECTION 10 14 00.
2. FOR ARCHITECTURAL LEGEND AND ADA FIXTURE AND ACCESSORY MOUNTING INFORMATION SEE SHEET 00-G-006.
3. FOR ABBREVIATIONS SEE SHEET 00-G-003.
4. FOR FIRE EXTINGUISHER INFORMATION SEE SPECIFICATIONS SECTION 10 44 00.
5. ALL DIMENSIONS ARE FROM FACE OF CONCRETE OR FINISH FACE OF STUD WALLS.

LEGEND

X'	TRAVEL DISTANCE (X = TOTAL DISTANCE TO EXIT IN FEET)
X"	EGRESS WIDTH (IN INCHES)
● F. EXT-1	FIRE EXTINGUISHER
● F. EXT-2	FIRE EXTINGUISHER
⊗	EXIT LIGHT, ONE SIDED
S1	SIGN CALL OUT

CODE DATA

2007 FLORIDA BUILDING CODE AS AMENDED BY LOCAL AGENCIES

SEE DRAWING 00-G-006 FOR APPLICABLE CODES.

BUILDING: WEST SCALEHOUSE

GENERAL INFORMATION

USE AND OCCUPANCY CLASSIFICATION (CHAPTER 3)	GROUP B BUSINESS
CONSTRUCTION CLASSIFICATION (CHAPTER 6)	IIB

AREA AND HEIGHT LIMITATIONS

MAXIMUM ALLOWABLE AREA (TABLE 503)		23,000 SF
ACTUAL AREA:		621 SF
ACTUAL PER FLOOR:	BASEMENT	N/A
	FIRST	621 SF
	SECOND	N/A
MAXIMUM ALLOWABLE STORIES (TABLE 503)		4
ACTUAL NUMBER OF STORIES		1
MAXIMUM ALLOWABLE HEIGHT (TABLE 503)		55 FT
ACTUAL HEIGHT:		12'-4"

OCCUPANCY / EGRESS INFORMATION

DESIGN OCCUPANCY (TABLE 1004.1.2)	1 PER 100 GROSS SF=6
ACTUAL NUMBER OF OCCUPANTS	2
EGRESS WIDTH BASED ON OCCUPANCY (TABLE 1005.1)	1.2 IN (36 IN PROVIDED)
ALLOWABLE DEAD END LENGTH (TABLE 1016.3)	20 FT
NUMBER OF EXITS	1
ALLOWABLE COMMON PATH OF TRAVEL (1013.3)	75 FT
MAX TRAVEL DISTANCE ALLOWED (TABLE 1015.1)	75 FT

REQUIRED FIRE RESISTANT RATINGS

BUILDING ELEMENTS (TABLE 601)	
STRUCTURAL FRAME	0 HR
EXTERIOR BEARING WALLS	0 HR
INTERIOR BEARING WALLS	0 HR
INTERIOR NON-BEARING WALLS	0 HR
FLOOR CONSTRUCTION	0 HR
ROOF CONSTRUCTION	0 HR
SHAFT ENCLOSURE (707.4)	N/A
STAIRWAY ENCLOSURE (1019.1)	N/A
CORRIDOR (TABLE 1016.1)	0 HR

OCCUPANCY SEPARATION (302.3.2)	N/A
INCIDENTAL USE AREAS (302.1.1)	N/A
FIRE SEPARATION DISTANCE (TABLE 602)	> 20 FT = 0 HR
DISTANCE FROM ADJACENT BUILDING OR PROPERTY LINE (TABLE 602)	> 20 FT = 0 HR

FIRE PROTECTION

SPRINKLERS	NOT REQUIRED, NOT PROVIDED
FIRE EXTINGUISHERS	PROVIDED
EXIT LIGHTING	PROVIDED

PLUMBING FIXTURES (FPC 403.1)

OCCUPANCY							
MINIMUM FIXTURE COUNT	WC		LAV		SHOWER 0	SINK 0
	M	F	M	F		
	1	1	1	1	DF 1	SS 1
ACTUAL FIXTURE COUNT	WC		LAV		SHOWER 0	SINK 1
	M	F	M	F		
	1		1		DF 1	SS 0
URINALS (FPC 419.2)	NOT MORE THAN 50% OF WC REQ.					

3011 SW WILLISTON RD
GAINESVILLE, FLORIDA 32608
EB0000072 AAC001992
Beth Trautwein AR 91388

SOLID WASTE SYSTEM
UPGRADE DESIGN
PASCO COUNTY
PASCO COUNTY, FLORIDA

CH2MHILL

ARCHITECTURAL
WEST PASCO SITE
SCALEHOUSE LIFE SAFETY PLAN
& CODE INFORMATION

FLORIDA DEPARTMENT OF ENVIRONMENTAL PROTECTION
FEB 07 2011
SOUTHWEST DISTRICT TAMPA

VERIFY SCALE
BAR IS ONE INCH ON ORIGINAL DRAWING.
0 1"

DATE	FEBRUARY 2011
PROJ	378217
DWG	10-A-101
SHEET	

NO	DATE	DSGN	DR	CHK	DESCRIPTION
		B TRAUTWEIN	A COULLIAS	T DODGE	REVISION

N	APVD	B TRAUTWEIN
APVR	BY	APVD

©CH2M HILL 2010. ALL RIGHTS RESERVED.
THIS DOCUMENT, AND THE IDEAS AND DESIGNS INCORPORATED HEREIN, AS AN INSTRUMENT OF PROFESSIONAL SERVICE, IS THE PROPERTY OF CH2M HILL AND IS NOT TO BE USED, IN WHOLE OR IN PART, FOR ANY OTHER PROJECT WITHOUT THE WRITTEN AUTHORIZATION OF CH2MHILL.
REUSE OF DOCUMENTS:

PERMITTING SUBMITTAL

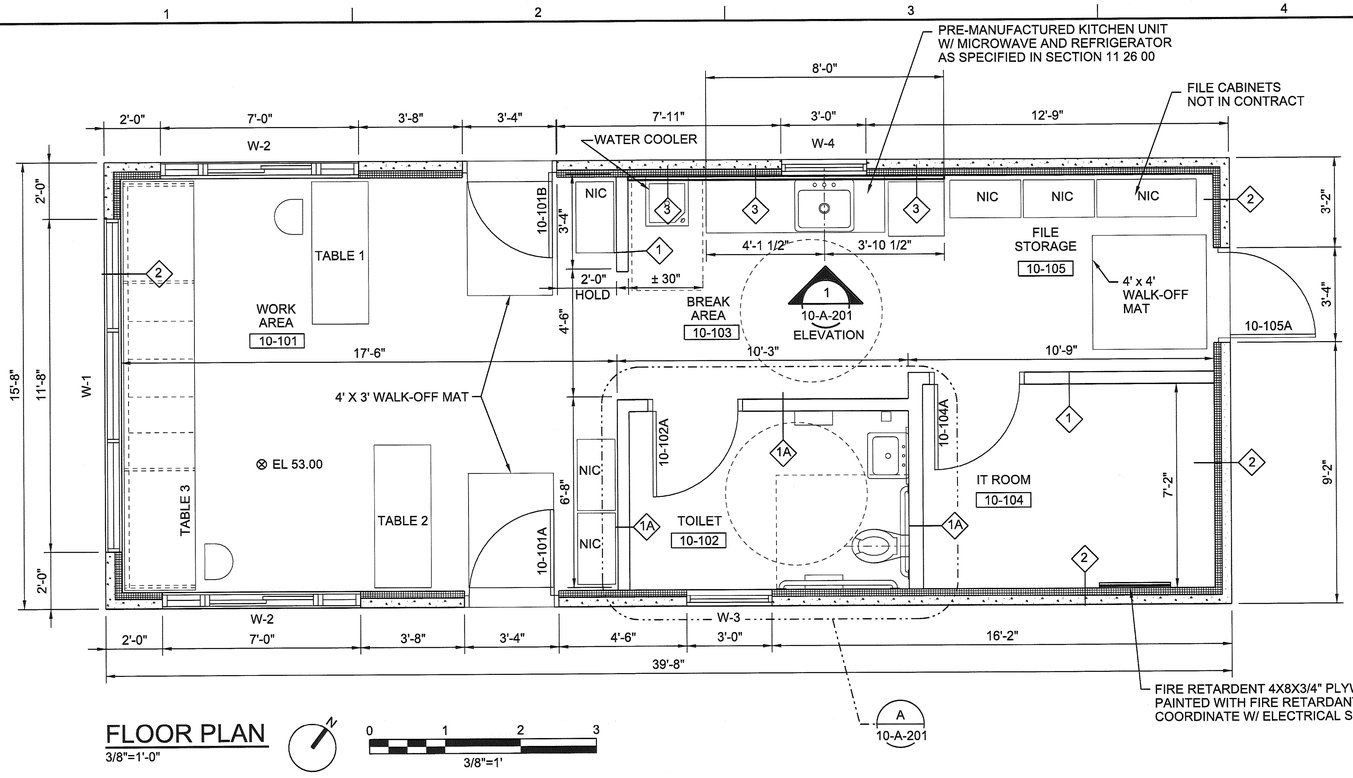

FLOOR PLAN
3/8"=1'-0"

0 1 2 3
3/8"=1'

NOTE: THIS STRUCTURE IS A PRE-ENGINEERED CONCRETE STRUCTURE.
AS SPECIFIED IN SECTION 13 34 23.

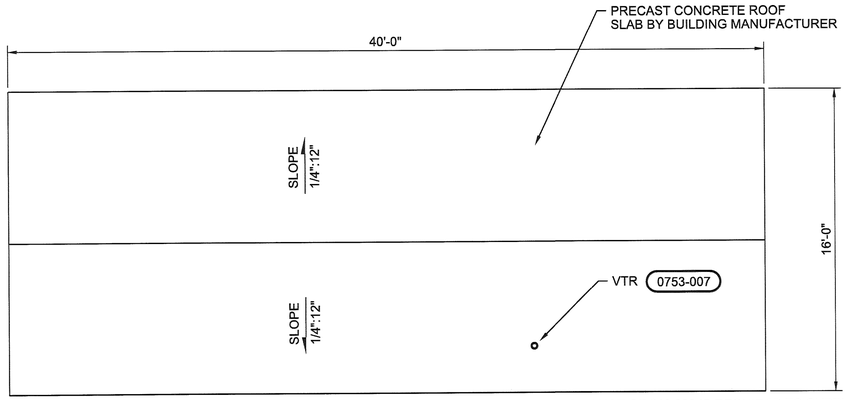

ROOF PLAN
1/4"=1'-0"

GENERAL NOTES:

1. FOR ARCHITECTURAL LEGEND SEE DRAWING 00-G-006.
2. FOR LIFE SAFETY PLAN, SEE DRAWING 10-A-101.
3. FOR DOOR AND HARDWARE DESCRIPTIONS SEE SPECIFICATION SECTION 08 71 00.
4. FOR WINDOW DESCRIPTIONS SEE SPECIFICATION SECTION 08 51 13.
5. FOR FINISH SCHEDULE SEE SPECIFICATION SECTION 09 06 00.
6. ALL INTERIOR HINGE SIDE OF DOORS IN GYP WALL BOARD WALL SHALL BE PLACED 3" FROM PERPENDICULAR WALL UNLESS OTHERWISE NOTED.
7. FOR ADA DESIGN REQUIREMENTS, SEE DRAWING 00-G-006.
8. FOR ADDTIONAL INFORMATION ON LABELED FURNITURE SHOWN ON THE FLOOR PLAN, SEE SPECIFICATION 06 40 00 ARCHITECTURAL WOODWORK.
9. AN ALLOWANCE OF $10,000 IS REQUIRED TO SUPPLEMENT THE SCOPE OF SPECIFICATION 06 40 00 ARCHITECTURAL WOODWORK FOR MANUFACTURED FURNITURE ITEMS FOR THE SCALEHOUSE.
10. FOR SIGN LOCATIONS SEE DRAWING 10-A-101.
11. FOR LOUVERS DESCRIPTION SEE SPECIFICATION SECTION 08 90 00.
12. NIC MEANS "NOT IN CONTRACT".
13. FOR GUARD POSTS LOCATIONS, SEE STRUCTURAL \ CIVIL DRAWINGS.
14. FOR INFORMATION ON VIDEO MONITORS. SEE CCTV BLOCK DIAGRAM ON ELECTRICAL DRAWINGS.
15. ALL INTERIOR DIMENSIONS ARE FROM THE FACE OF THE GYPSUM BOARD UNLESS OTHERWISE NOTED.
16. FOR FIRE PROTECTION FIRE EXTINGUISHER INFORMATION, SEE SPECIFICATION SECTION 10 44 00.
17. ALL FASTENERS USED TO CONNECT INTERIOR "BUILD-OUT" MEMBERS SHALL BE GALVANIZED CONCRETE SCREW ANCHORS AND SHALL BE PRE-DRILLED. COORDINATE WITH THE PRECAST BUILDING MANUFACTURER PRIOR TO PENETRATING CONCRETE WALLS, SLABS AND CEILINGS WITH ANY FASTENERS.

WALL TYPES

GENERAL WALL FRAMING NOTE:

GENERAL CONTRACTOR TO COORDINATE LOCATION OF EXTRA STUDS AS REQUIRED IN ALL WALL TYPES FOR SUPPORT AND/OR MOUNTING OF ELECTRICAL, PLUMBING OR HVAC EQUIPMENT AS SHOWN ON DRAWINGS.

1	0 HR	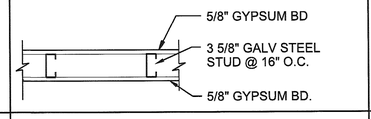	MIN 6" ABOVE CEILING HEIGHT
1A	0 HR	TYPE 1 W/ FULL THICK SOUND ATTENUATION BATT	FULL HEIGHT
2	0 HR	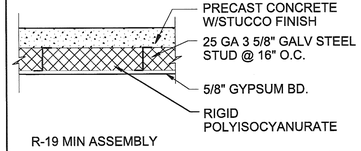 R-19 MIN ASSEMBLY	FULL HEIGHT
3	0 HR	SAME AS TYPE 2 BUT WITH 6" GALV STEEL C CHANNEL @ 16" SPACING TO SUPPORT WATER COOLER.	FULL HEIGHT

PRE-ENGINEERED BUILDINGS AND COMPONENTS IN FLORIDA

THE PRE-ENGINEERED BUILDING DRAWINGS AND SPECIFICATIONS INCLUDE CLADDING COMPONENTS SUCH AS WINDOWS, DOORS , FRAMES AND LOUVERS. SPECIFICATIONS SECTIONS QUALIFY EACH COMPONENTS AND DEVELOPED RESISTANT WIND PRESSURES ARE SHOWN ON THE DOOR AND HARDWARE SCHEDULE, THE WINDOW SCHEDULE AND THE LOUVER SCHEDULE.

THE PRE-ENGINEERED BUILDING MANUFACTURER MAY SUBMIT, AS PART OF THE SHOP DRAWINGS PROCESS, COMPONENTS TO BE SUPPLIED AND INSTALLED PROVIDING THIRD PARTY TESTING INFORMATION OR FLORIDA LICENSED ENGINEER CALCULATIONS ARE SUBMITTED FOR APPROVAL ESTABLISHING THE MANUFACTUER'S STANDARD COMPONENTS AS MEETING THE CRITERIA ESTABLISHED BY THE PROJECT SPECIFICATIONS FOR EACH CLADDING COMPONENT.

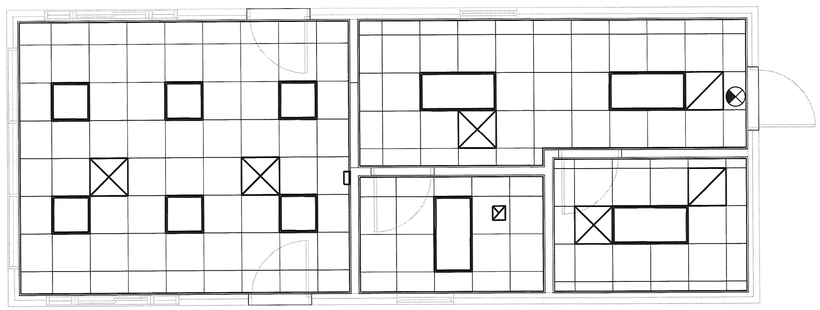

REFLECTED CEILING PLAN
1/4"=1'-0"

REFLECTED CEILING LEGEND:

- 5/8" GLASS MATT GYPSUM SHEATHING
- SUSPENDED ACOUSTICAL CEILING
- EXIT LIGHT FIXTURE
- 2'-0" X 4'-0" RECESSED MOUNTED FLUORESCENT LIGHT FIXTURE FLUSH MOUNTED
- 2'-0" X 2'-0" RECESSED MOUNTED FLUORESCENT LIGHT FIXTURE FLUSH MOUNTED
- 1'-0" X 1'-0" EXHAUST
- 2'-0" X 2'-0" RETURN
- 2'-0" X 2'-0" SUPPLY

FLORIDA DEPARTMENT OF ENVIRONMENTAL PROTECTION
FEB 07 2011
SOUTHWEST DISTRICT TAMPA

NO	DATE	DSGN	DR	CHK	DESCRIPTION
NO.	DATE	B TRAUTWEIN	A COULLIAS	T DODGE	REVISION

APVR N
BY APVD
APVD
B TRAUTWEIN

©CH2M HILL 2016. ALL RIGHTS RESERVED.
REUSE OF DOCUMENTS: THIS DOCUMENT, AND THE IDEAS AND DESIGNS INCORPORATED HEREIN, AS AN INSTRUMENT OF PROFESSIONAL SERVICE, IS THE PROPERTY OF CH2M HILL AND IS NOT TO BE USED, IN WHOLE OR IN PART, FOR ANY OTHER PROJECT WITHOUT THE WRITTEN AUTHORIZATION OF CH2MHILL.

3011 SW WILLISTON RD
GAINESVILLE, FLORIDA 32608
EB0000072 AAC001992
Beth Trautwein AR 91388

SOLID WASTE SYSTEM
UPGRADE DESIGN
PASCO COUNTY
PASCO COUNTY, FLORIDA

CH2MHILL

ARCHITECTURAL
WEST PASCO SITE
SCALEHOUSE FLOOR PLAN, ROOF PLAN & REFLECTED CEILING PLAN

VERIFY SCALE
BAR IS ONE INCH ON ORIGINAL DRAWING. 0 1"

DATE	FEBRUARY 2011
PROJ	378217
DWG	10-A-102
SHEET	

PERMITTING SUBMITTAL

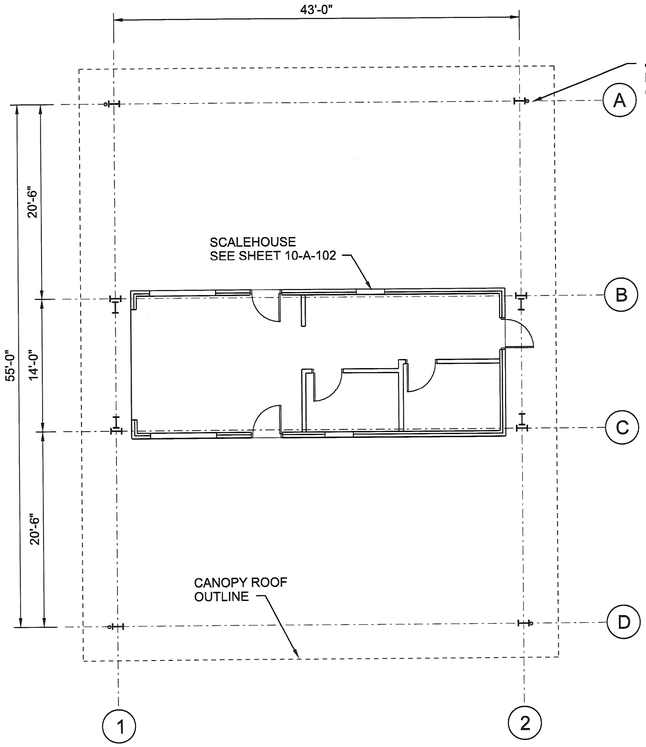

FLOOR PLAN

1/8"=1'-0"

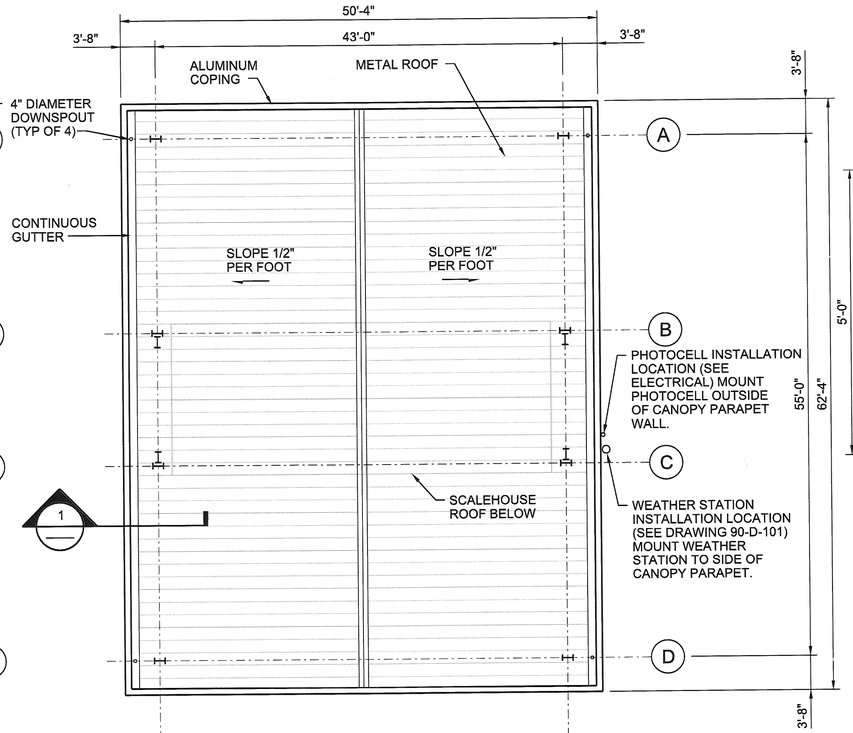

ROOF PLAN

1/8"=1'-0"

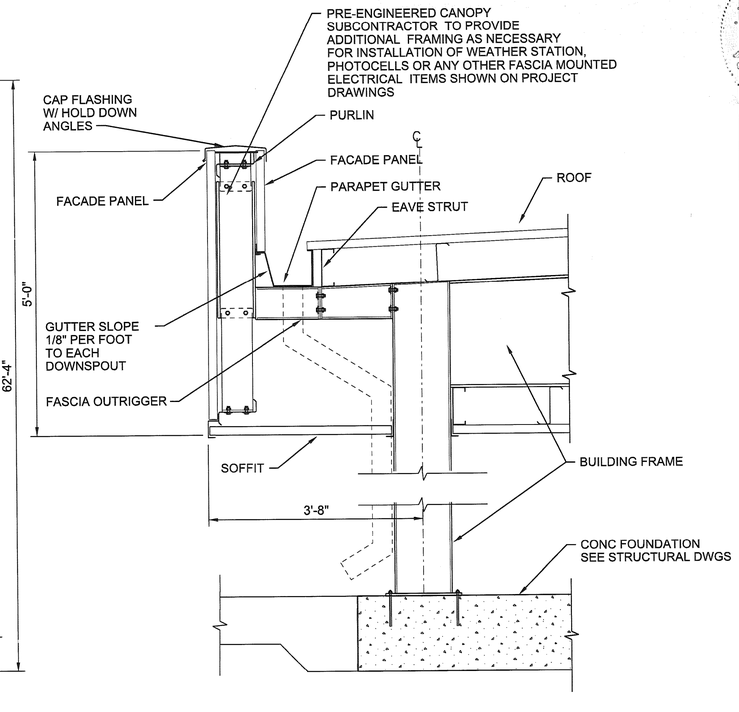

1 DETAIL

3/4"=1'-0"

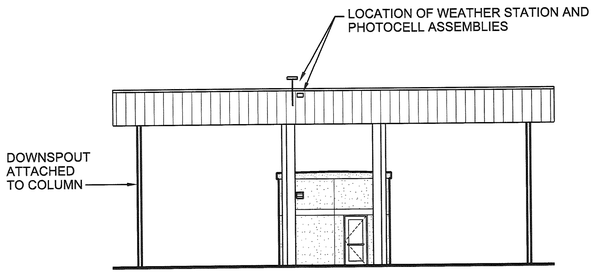

EAST ELEVATION

3/32"=1'-0"

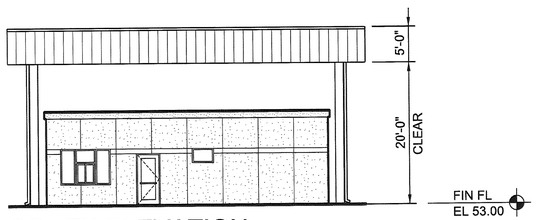

SOUTH ELEVATION

3/32"=1'-0"

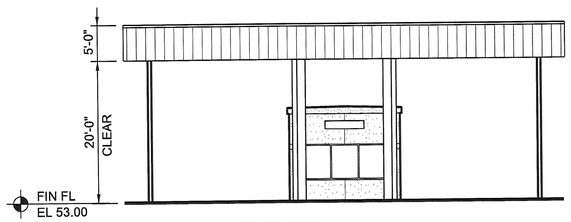

WEST ELEVATION

3/32"=1'-0"

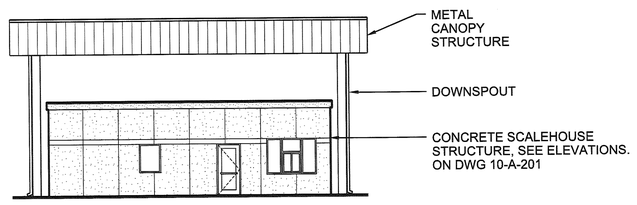

NORTH ELEVATION

3/32"=1'-0"

NOTE: THE CANOPY IS A PRE-ENGINEERED METAL STRUCTURE AS SPECIFIED IN SECTION 13 34 19

FLORIDA DEPARTMENT OF ENVIRONMENTAL PROTECTION
FEB 07 2011
SOUTHWEST DISTRICT TAMPA

NO	DATE	DSGN
		B TRAUTWEIN

DESCRIPTION	DR	CHK	APVD
REVISION	A COULLIAS	T DODGE	B TRAUTWEIN

APVR	BY	APVD
		N

3011 SW WILLISTON RD
GAINESVILLE, FLORIDA 32608
EB0000172 FL ACO01992
Beth Trautwein AR 91388

SOLID WASTE SYSTEM
UPGRADE DESIGN
PASCO COUNTY
PASCO COUNTY, FLORIDA

CH2MHILL

ARCHITECTURAL
WEST PASCO SITE
SCALEHOUSE CANOPY
FLOOR \ ROOF PLAN & DETAIL

VERIFY SCALE
BAR IS ONE INCH ON ORIGINAL DRAWING.
0 1"

DATE	FEBRUARY 2011
PROJ	378217
DWG	10-A-103
SHEET	

PERMITTING SUBMITTAL

©CH2M HILL 2010. ALL RIGHTS RESERVED.
REUSE OF DOCUMENTS: THIS DOCUMENT, AND THE IDEAS AND DESIGNS INCORPORATED HEREIN, AS AN INSTRUMENT OF PROFESSIONAL SERVICE, IS THE PROPERTY OF CH2M HILL AND IS NOT TO BE USED, IN WHOLE OR IN PART, FOR ANY OTHER PROJECT WITHOUT THE WRITTEN AUTHORIZATION OF CH2MHILL.

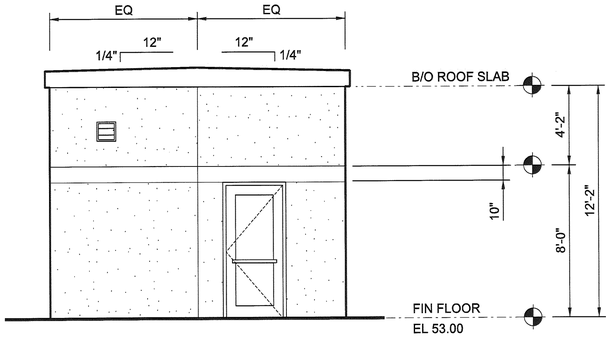

WEST ELEVATION
1/4"=1'-0"

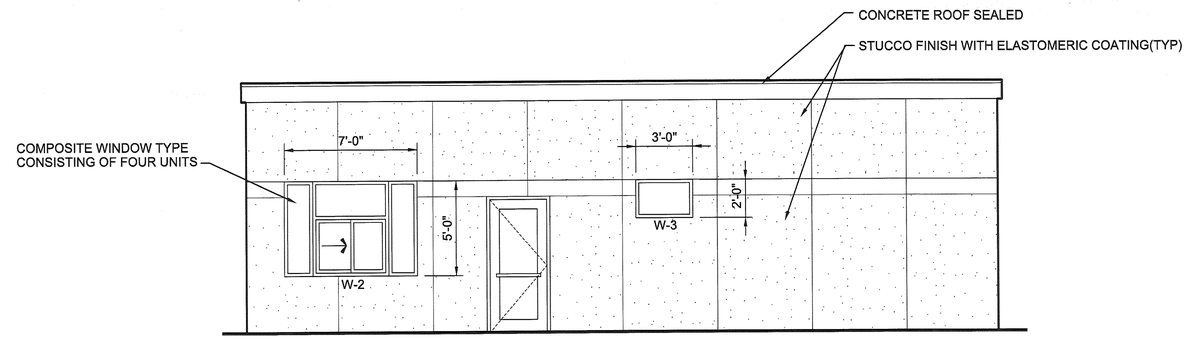

SOUTH ELEVATION
1/4"=1'-0"

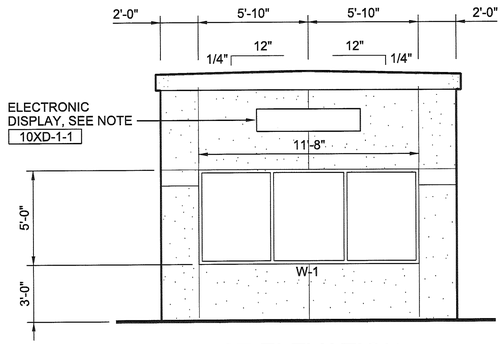

EAST ELEVATION
1/4"=1'-0"

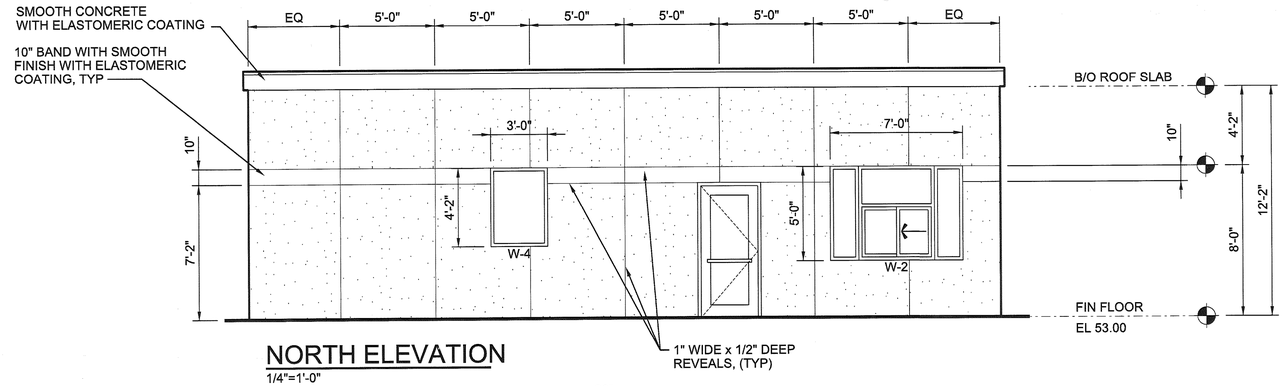

NORTH ELEVATION
1/4"=1'-0"

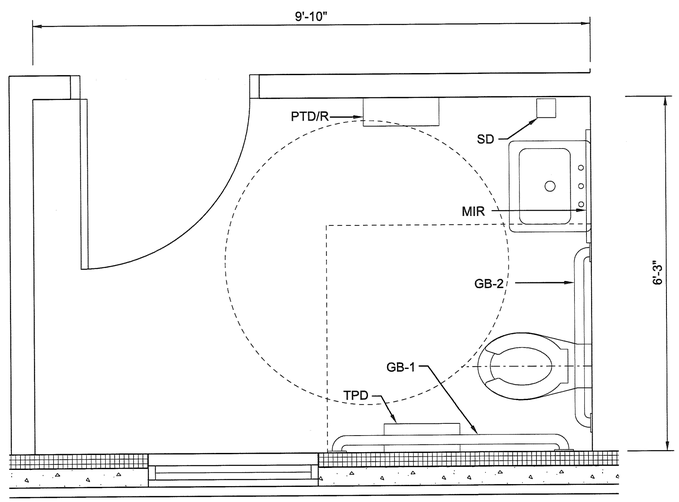

A ENLARGED PLAN
3/4"=1'-0"

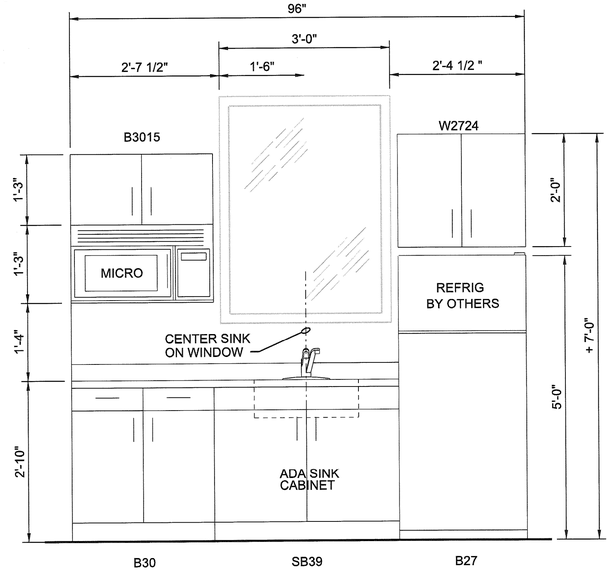

1 INTERIOR ELEVATION
3/4"=1'-0"

PRE-MANUFACTURED UNIT KITCHEN AS SPECIFIED
IN SECTION 11 26 00

NOTE:

1. FOR ELECTRONIC DISPLAY TAG INFORMATION SEE DRAWING 90-D-601

FLORIDA DEPARTMENT OF ENVIRONMENTAL PROTECTION
FEB 07 2011
SOUTHWEST DISTRICT TAMPA

NO	DATE	DESCRIPTION	CHK	APVD
DSGN	B TRAUTWEIN	DR	A COULLIAS	APVD	T DODGE	APVR	N
NO.	DATE	REVISION	BY	APVD	B TRAUTWEIN	BY	APVD

©CH2M HILL 2010. ALL RIGHTS RESERVED.

3011 SW WILLISTON RD
GAINESVILLE, FLORIDA 32608
EB0000072 AAC001992
Beth Trautwein AR 91388

SOLID WASTE SYSTEM
UPGRADE DESIGN
PASCO COUNTY
PASCO COUNTY, FLORIDA

REUSE OF DOCUMENTS: THIS DOCUMENT AND THE IDEAS AND DESIGNS INCORPORATED HEREIN, AS AN INSTRUMENT OF PROFESSIONAL SERVICE, IS THE PROPERTY OF CH2M HILL AND IS NOT TO BE USED, IN WHOLE OR IN PART, FOR ANY OTHER PROJECT WITHOUT THE WRITTEN AUTHORIZATION OF CH2MHILL.

CH2MHILL

ARCHITECTURAL
WEST PASCO SITE
SCALEHOUSE
ELEVATIONS

PERMITTING SUBMITTAL

VERIFY SCALE
BAR IS ONE INCH ON ORIGINAL DRAWING.
0 1"

DATE	FEBRUARY 2011
PROJ	378217
DWG	10-A-201
SHEET	

NDM SERVER: GNV FILENAME: dn10A201_378217.dgn PLOT DATE: 2/2/2011 PLOT TIME: 3:50:53 PM

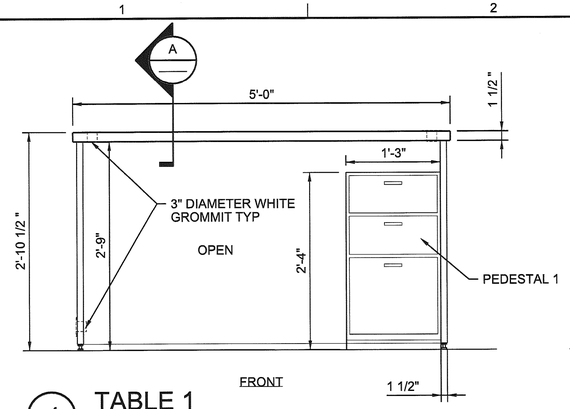

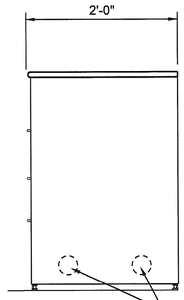

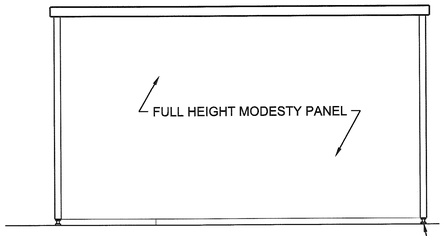

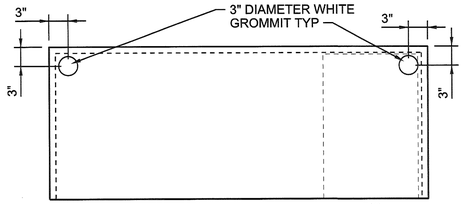

1 TABLE 1
1"=1'-0"

GENERAL NOTES:

1. ALL EXPOSED SURFACE INTERIOR & EXTERIOR (AS THOUGH THERE IS NO PEDESTALS) TO BE PLASTIC LAMINATE AS SCHEDULED IN COLOR LIST.
2. FOR ADDITIONAL INFORMATION, SEE ARCH WOODWORK SPEC 06 40 00

GENERAL ARCHITECTURAL MILLWORK NOTES:

METAL PEDESTALS:

PEDESTAL 1: 1 FILE DRAWER WITH LOCK MODEL # 36723R
2 BOX DRAWERS
22 7/8" DEEP x 15" WIDE X 28" HIGH
MANUFACTURED BY HON OR APPROVED EQUAL

PEDESTAL 2: 2 FILE DRAWERS WITH LOCK MODEL # 36823R
22 7/8" DEEP X 15" WIDE X 28" HIGH
MANUFACTURED BY HON OR APPROVED EQUAL

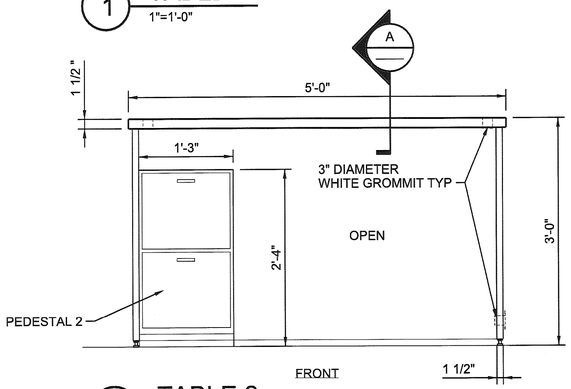

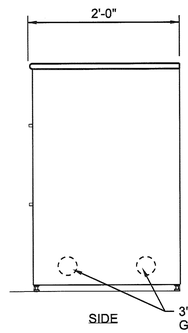

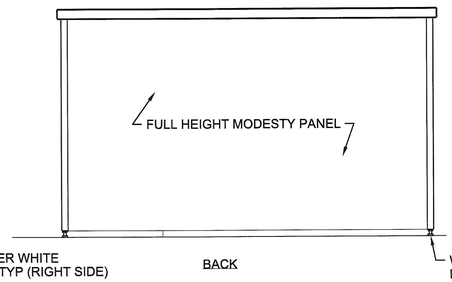

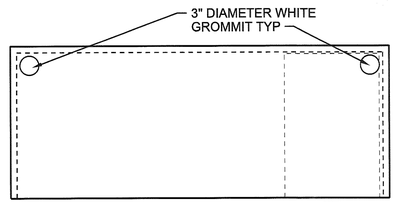

2 TABLE 2
1"=1'-0"

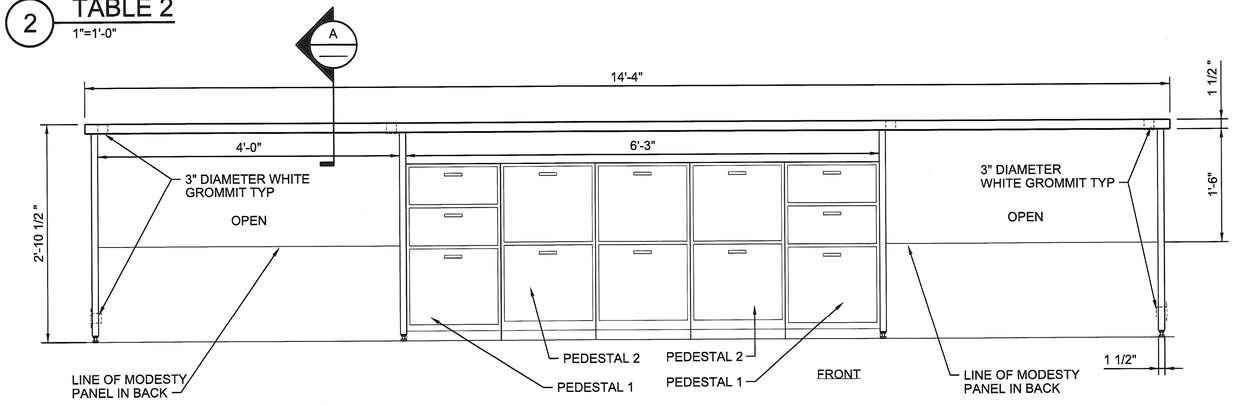

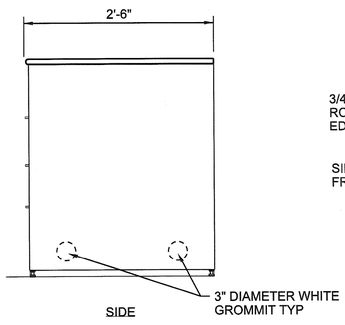

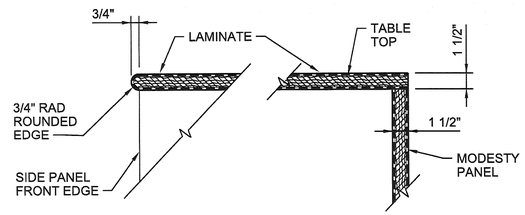

A DETAIL
3"=1"

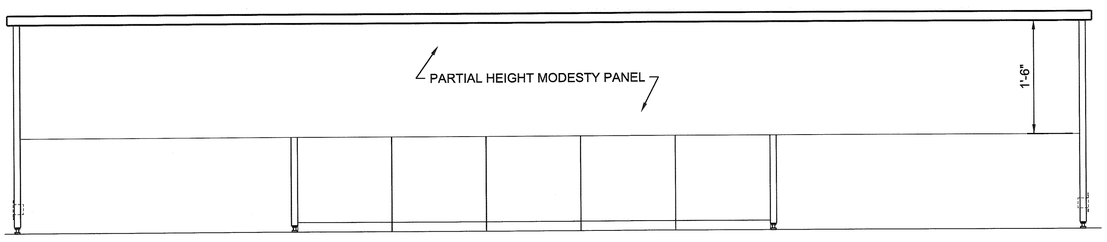

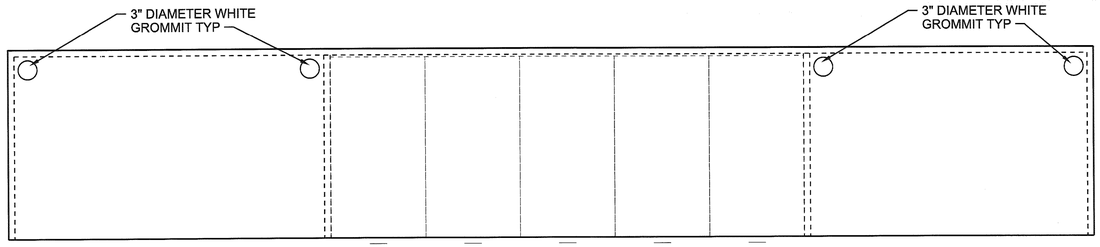

3 TABLE 3
1"=1'-0"

FLORIDA DEPARTMENT OF ENVIRONMENTAL PROTECTION
FEB 07 2011
SOUTHWEST DISTRICT
TAMPA

NO	DATE	DSGN
NO.	DATE	B TRAUTWEIN

DESCRIPTION	CHK	DR
REVISION	A COULLIAS	
APVD	T DODGE	APVD
APVR	BY	APVD
N		B TRAUTWEIN

©CH2M HILL 2010. ALL RIGHTS RESERVED.
THIS DOCUMENT, AND THE IDEAS AND DESIGNS INCORPORATED HEREIN, AS AN INSTRUMENT OF PROFESSIONAL SERVICE, IS THE PROPERTY OF CH2M HILL AND IS NOT TO BE USED, IN WHOLE OR IN PART, FOR ANY OTHER PROJECT WITHOUT THE WRITTEN AUTHORIZATION OF CH2MHILL.
REUSE OF DOCUMENTS:

3011 SW WILLISTON RD
GAINESVILLE, FLORIDA 32608
EB0000072 AAC001992
Beth Trautwein AR 91388

SOLID WASTE SYSTEM
UPGRADE DESIGN
PASCO COUNTY
PASCO COUNTY, FLORIDA

CH2MHILL

ARCHITECTURAL
WEST PASCO SITE
SCALEHOUSE
MILLWORK AND DETAILS

PERMITTING SUBMITTAL

VERIFY SCALE
BAR IS ONE INCH ON ORIGINAL DRAWING.
0 1"

DATE	FEBRUARY 2011
PROJ	378217
DWG	10-A-501
SHEET	

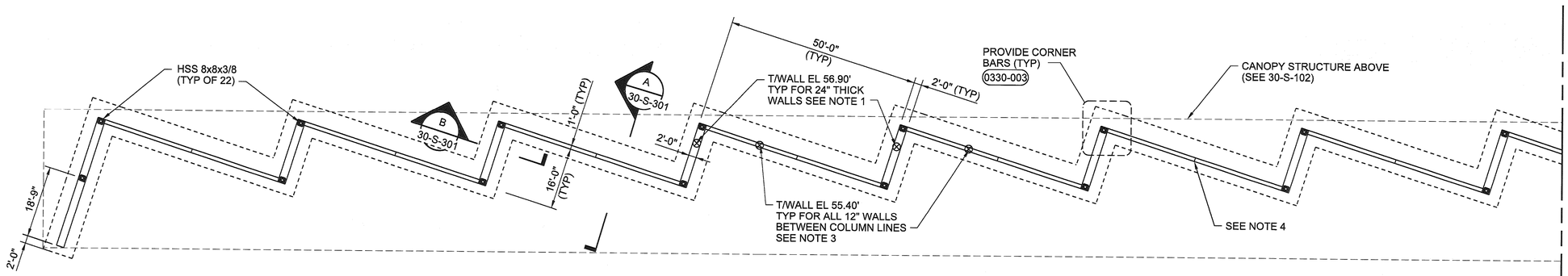

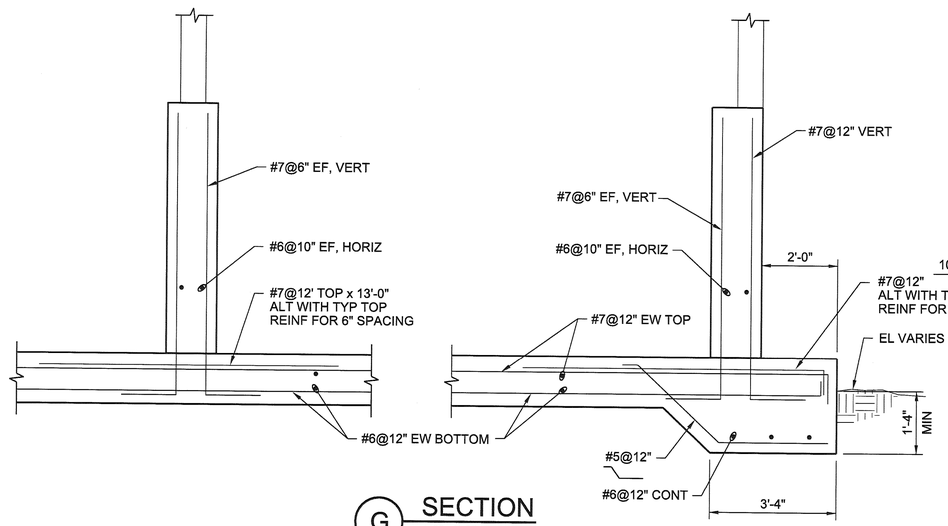

G SECTION
1/2"=1'-0"

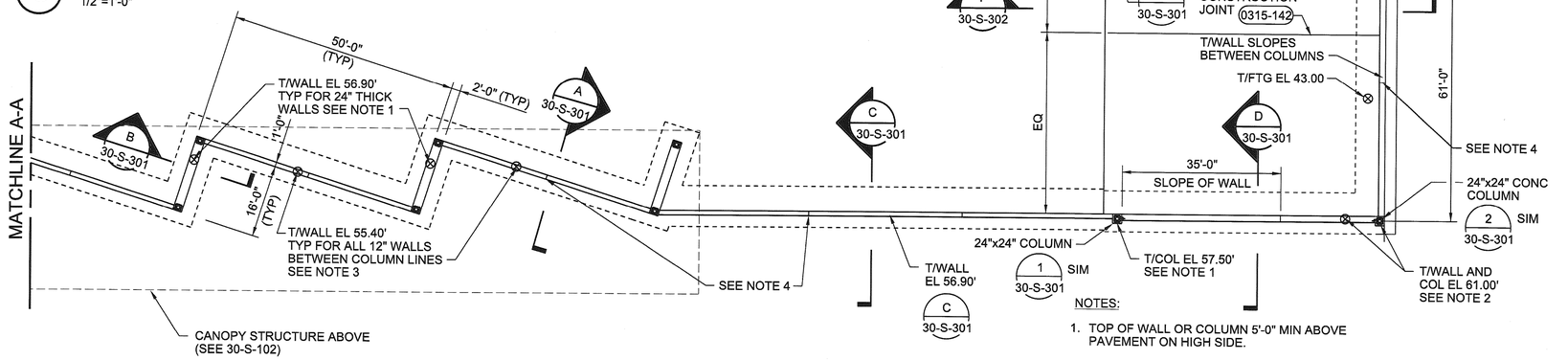

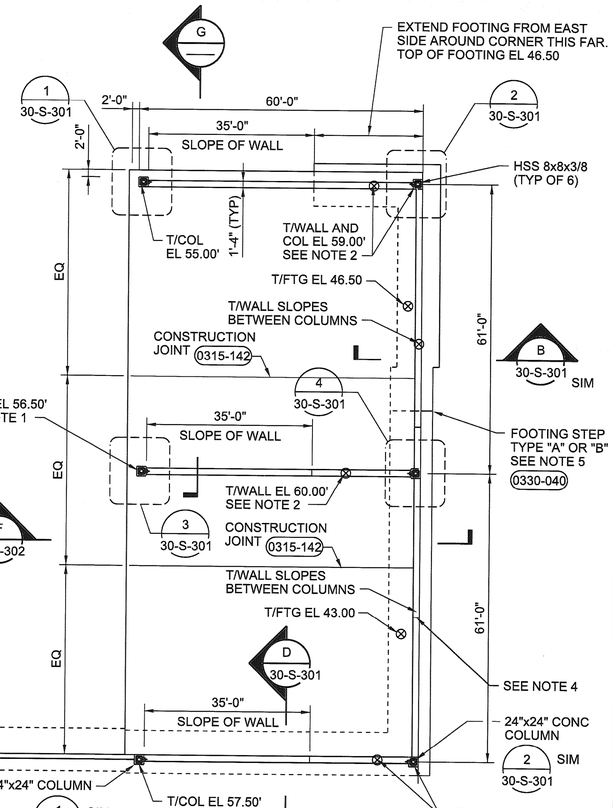

NOTES:

1. TOP OF WALL OR COLUMN 5'-0" MIN ABOVE PAVEMENT ON HIGH SIDE.
2. TOP OF WALL 8'-0" MIN ABOVE PAVEMENT ON HIGH SIDE.
3. TOP OF WALL 3'-6" MIN ABOVE PAVEMENT ON HIGH SIDE.
4. PROVIDE VERT CONTROL JOINTS 0315-201 IN WALLS AT 50' MAX SPACING. SUBMIT LAYOUT FOR REVIEW PRIOR TO CONSTRUCTION.
5. LOCATE STEP SO 1'-6" MIN OF SOIL IS OVER TOE OF FOOTING.

CITIZEN DROP OFF FOUNDATION PLAN
1/16"= 1'-0"

N
0 16 32 48

FLORIDA DEPARTMENT OF ENVIRONMENTAL PROTECTION
FEB 07 2011
SOUTHWEST DISTRICT
TAMPA

©CH2M HILL 2010. ALL RIGHTS RESERVED.
REUSE OF DOCUMENTS: THIS DOCUMENT, AND THE IDEAS AND DESIGNS INCORPORATED HEREIN, AS AN INSTRUMENT OF PROFESSIONAL SERVICE, IS THE PROPERTY OF CH2M HILL AND IS NOT TO BE USED, IN WHOLE OR IN PART, FOR ANY OTHER PROJECT WITHOUT THE WRITTEN AUTHORIZATION OF CH2MHILL.

NO	DATE	DSGN	M THUE
		DR	J PRUITT
		CHK	M CHRZANOWSKI
		APVD	
APVR		BY	M THUE
N		APVD	

DESCRIPTION
REVISION

CH2MHILL
3011 SW WILLISTON RD
GAINESVILLE, FLORIDA 32608
EB0000072 AAC001992
Monrad R Thue PE 32071

SOLID WASTE SYSTEM
UPGRADE DESIGN
PASCO COUNTY
PASCO COUNTY, FLORIDA

STRUCTURAL
WEST PASCO SITE
CITIZEN DROP OFF AREA
FOUNDATION PLAN

VERIFY SCALE
BAR IS ONE INCH ON ORIGINAL DRAWING.
0 1"

DATE	FEBRUARY 2011
PROJ	378217
DWG	30-S-101
SHEET	

PERMITTING SUBMITTAL

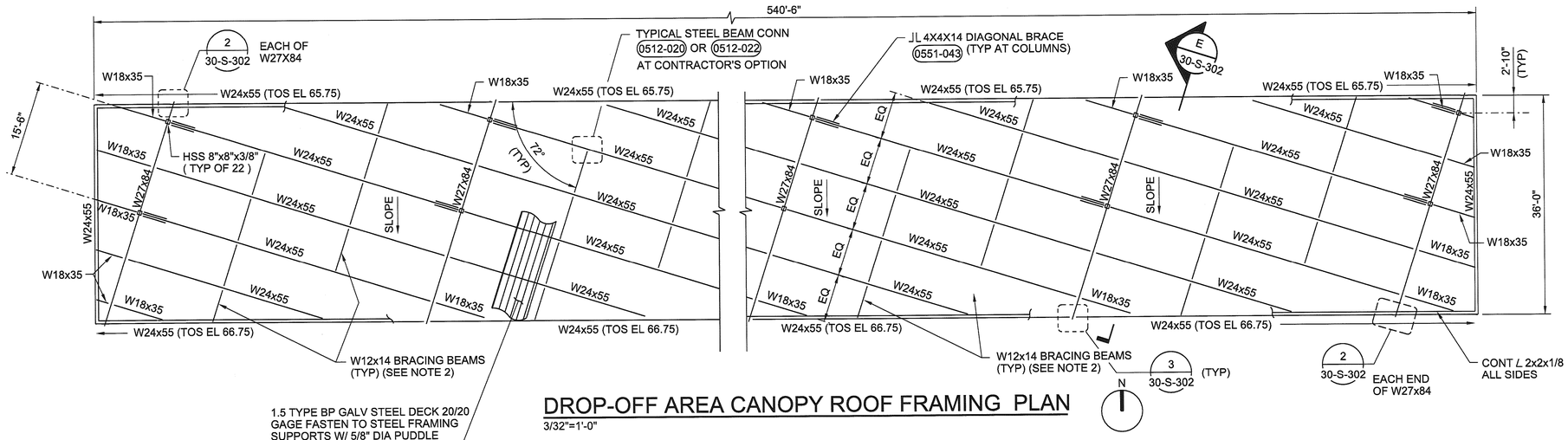

DROP-OFF AREA CANOPY ROOF FRAMING PLAN

3/32"=1'-0"

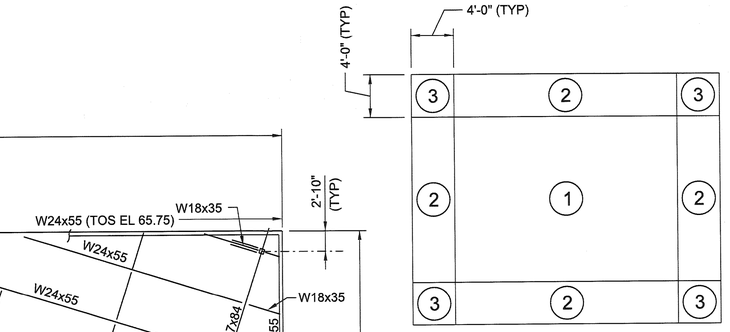

ZONE DIAGRAM FOR ROOF WIND PRESSURES

SEE LOAD TABLE ON 40-S-102

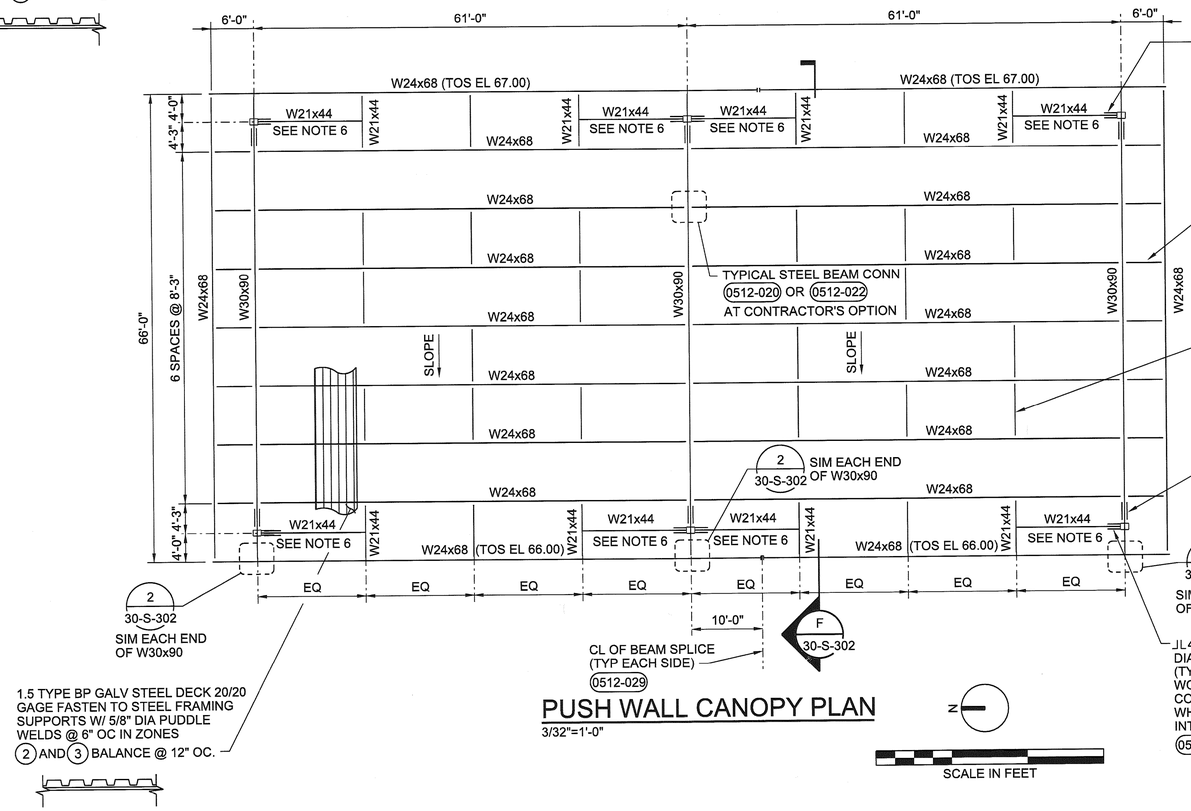

PUSH WALL CANOPY PLAN

3/32"=1'-0"

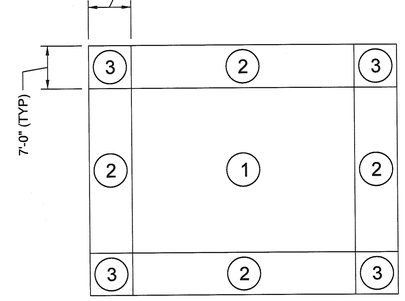

ZONE DIAGRAM FOR ROOF WIND PRESSURES

SEE LOAD TABLE ON 40-S-102

NOTES:

1. SEE ARCHITECTURAL ROOF PLAN FOR ROOF SLOPES CLEAR HEIGHT TO UNDERSIDE OF STEEL FRAMING SHALL NOT BE LESS THAN 12'-0" AT ANY LOCATION.
2. W12x14 BRACING MEMBER TO RUN PERPENDICULAR TO W24x55 BEAMS AT 1/3 POINTS BETWEEN COLUMNS AS SHOWN. BOTTOM OF BEAM ELEVATIONS TO MATCH ROOF SLOPES AND BE 3" ABOVE BOTTOM OF PERPENDICULAR SUPPORTING BEAMS. CONNECT BRACING MEMBERS EACH END PER 0512-022 SIMILAR.
3. CONNECT STEEL BEAMS TO SUPPORTING STEEL BEAMS PER 0512-020 WHERE SKEW IS GREATER THAN 45° USE SINGLE ANGLE 3/8" THICK BENT PLATE CONNECTION WITH 6 ROWS OF 3/4" DIA BOLTS.
4. ROOF FRAMING SLOPES FOR DROP-OFF AREA CANOPY FROM NORTH TO SOUTH WITH TOS ELEVATIONS AT NORTH AND SOUTH SIDES CALLED OUT ON FRAMING PLAN. BEAMS RUNNING EAST AND WEST TO BE TILTED TO MATCH ROOF SLOPE. ROOF FRAMING SLOPES FOR PUSH WALL CANOPY FROM EAST TO WEST WITH TOS ELEVATIONS AT NORTH AND SOUTH SIDES CALLED OUT ON FRAMING PLAN. BEAMS RUNNING EAST AND WEST TO BE TILTED TO MATCH ROOF SLOPE.
5. CONSTRUCT W24 AND W30 BEAMS WITH NATURAL CROWN UP.
6. CONNECT EACH END OF W21x44 TO FULL DEPTH 3/8" STIFFENER PLATES 0512-022 SIMILAR.

FLORIDA DEPARTMENT OF ENVIRONMENTAL PROTECTION
FEB 07 2011
SOUTHWEST DISTRICT
TAMPA

NO	DATE	DESCRIPTION	DR	CHK	APVD
DSGN	M THUE	REVISION	J PRUITT	M CHRZANOWSKI	M THUE

APVR N
BY APVD

©CH2M HILL 2010. ALL RIGHTS RESERVED.

3011 SW WILLISTON RD
GAINESVILLE, FLORIDA 32608
EB0000072 AAC001992
Monrad R Thue PE 32071

CH2MHILL

SOLID WASTE SYSTEM
UPGRADE DESIGN
PASCO COUNTY
PASCO COUNTY, FLORIDA

STRUCTURAL
WEST PASCO SITE
CITIZEN DROP OFF AREA
CANOPY ROOF PLAN

REUSE OF DOCUMENTS: THIS DOCUMENT, AND THE IDEAS AND DESIGNS INCORPORATED HEREIN AS AN INSTRUMENT OF PROFESSIONAL SERVICE, IS THE PROPERTY OF CH2M HILL AND IS NOT TO BE USED, IN WHOLE OR IN PART, FOR ANY OTHER PROJECT WITHOUT THE WRITTEN AUTHORIZATION OF CH2MHILL.

PERMITTING SUBMITTAL

VERIFY SCALE
BAR IS ONE INCH ON ORIGINAL DRAWING.
0 1"

DATE	FEBRUARY 2011
PROJ	378217
DWG	30-S-102
SHEET	

NDM SERVER: GNV FILENAME: dn30s102_378217.dgn PLOT DATE: 2/2/2011 PLOT TIME: 3:48:32 PM

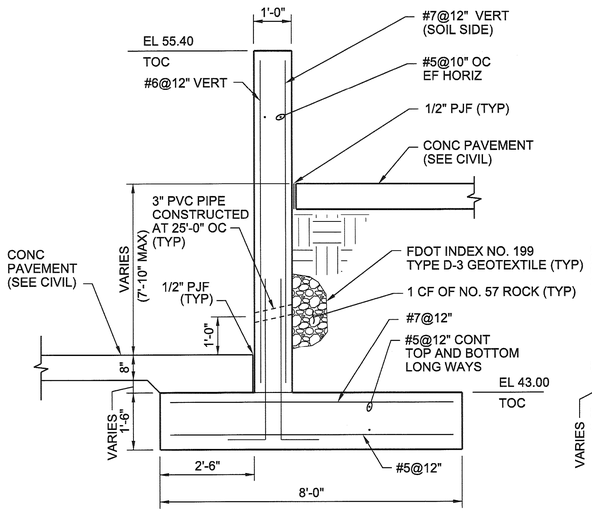

A SECTION
1/2"= 1'-0"

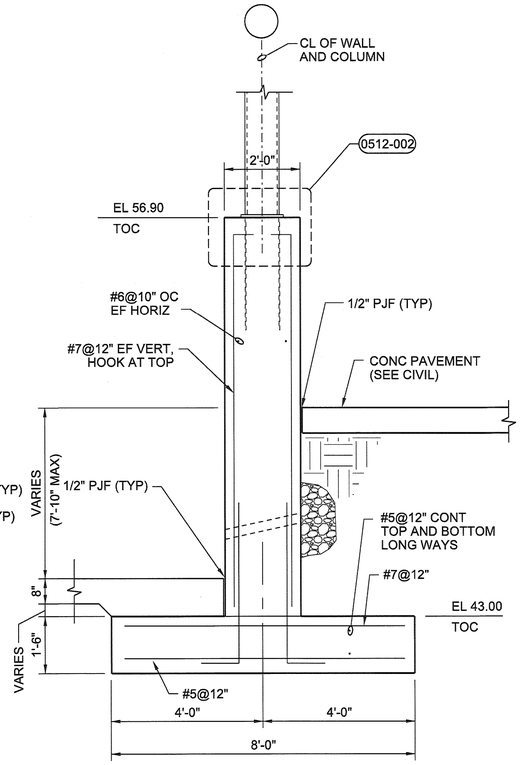

B SECTION
1/2"= 1'-0"

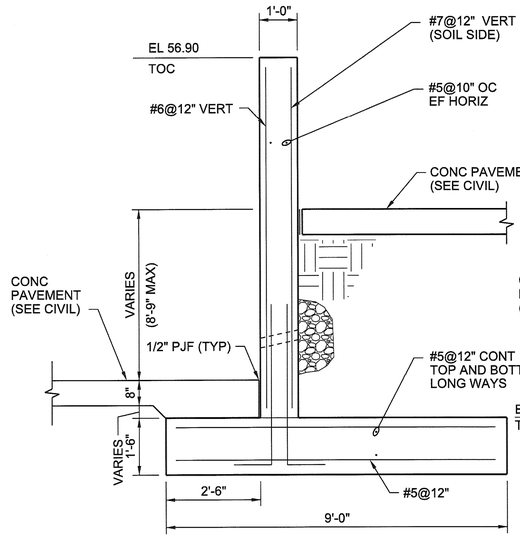

C SECTION
1/2"= 1'-0"

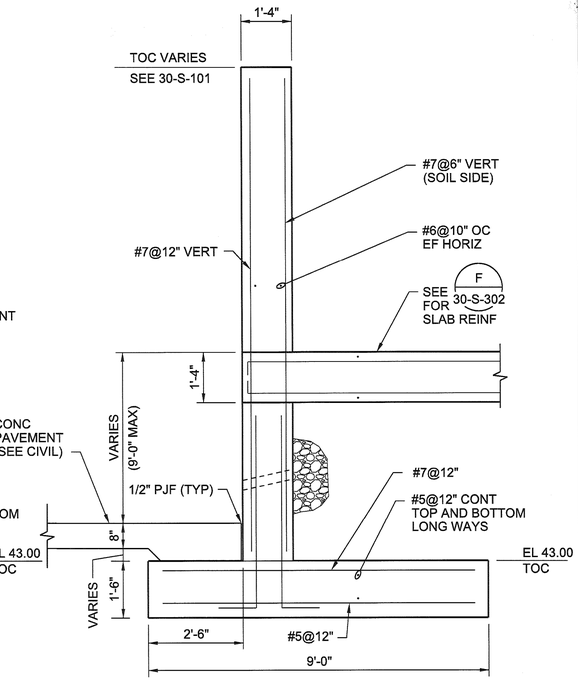

D SECTION
1/2"= 1'-0"

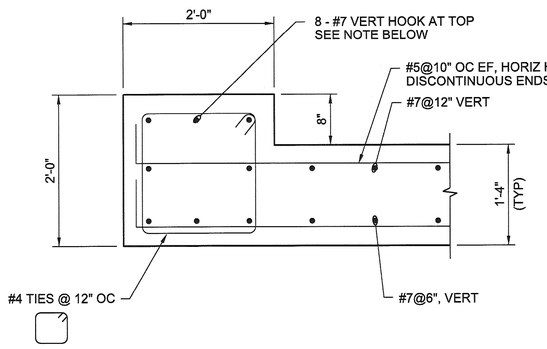

1 DETAIL
1"= 1'-0"

NOTE:

PROVIDE VERTICAL DOWELS TO MATCH VERTICAL REINFORCING AND HOOK DOWELS AT BOTTOM OF MAT FOOTING SEE SECTIONS G 30-S-302

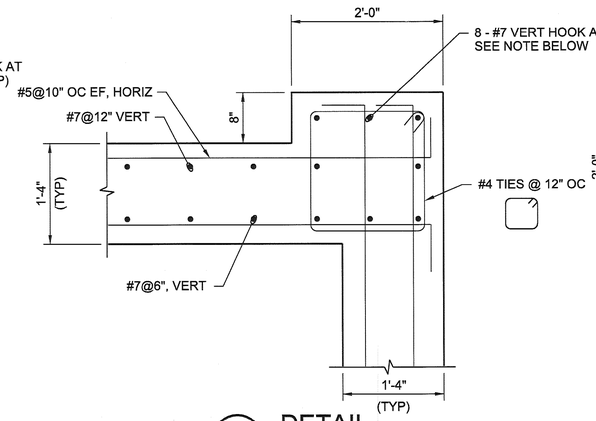

2 DETAIL
1"= 1'-0"

NOTE:

PROVIDE VERTICAL DOWELS TO MATCH VERTICAL REINFORCING AND HOOK DOWELS AT BOTTOM OF MAT FOOTING SEE SECTIONS F 30-S-302

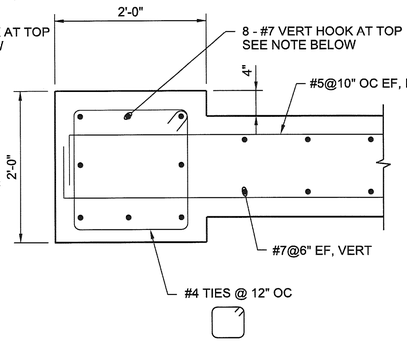

3 DETAIL
1"= 1'-0"

NOTE:

PROVIDE VERTICAL DOWELS TO MATCH VERTICAL REINFORCING AND HOOK DOWELS AT BOTTOM OF MAT FOOTING SEE SECTIONS G 30-S-302

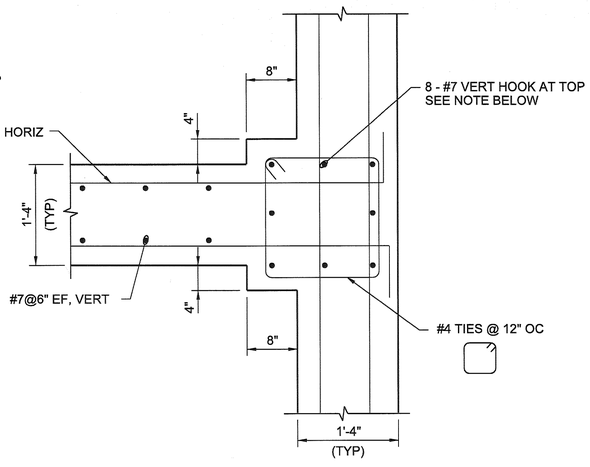

4 DETAIL
1"= 1'-0"

NOTE:

PROVIDE VERTICAL DOWELS TO MATCH VERTICAL REINFORCING AND HOOK DOWELS AT BOTTOM OF WALL FOOTING SEE SECTIONS F 30-S-302

FLORIDA DEPARTMENT OF ENVIRONMENTAL PROTECTION
FEB 07 2011
SOUTHWEST DISTRICT TAMPA

©Ch2M HILL 2010. ALL RIGHTS RESERVED.
REUSE OF DOCUMENTS: THIS DOCUMENT, AND THE IDEAS AND DESIGNS INCORPORATED HEREIN, AS AN INSTRUMENT OF PROFESSIONAL SERVICE, IS THE PROPERTY OF CH2M HILL AND IS NOT TO BE USED, IN WHOLE OR IN PART, FOR ANY OTHER PROJECT WITHOUT THE WRITTEN AUTHORIZATION OF CH2MHILL

NO	DATE	DSGN	M THUE
		DR	J PRUITT
		CHK	M CHRZANOWSKI
		APVD	
		APVR	
		BY	M THUE
		APVD	
		N	

DESCRIPTION
REVISION

3011 SW WILLISTON RD
GAINESVILLE, FLORIDA 32608
EB0000072 AAC001992
Monrad R Thue PE 32071

CH2MHILL

SOLID WASTE SYSTEM
UPGRADE DESIGN
PASCO COUNTY
PASCO COUNTY, FLORIDA

STRUCTURAL
WEST PASCO SITE
CITIZEN DROP OFF AREA
SECTIONS AND DETAILS

PERMITTING SUBMITTAL

VERIFY SCALE
BAR IS ONE INCH ON ORIGINAL DRAWING.
0 1"

DATE	FEBRUARY 2011
PROJ	378217
DWG	30-S-301
SHEET	

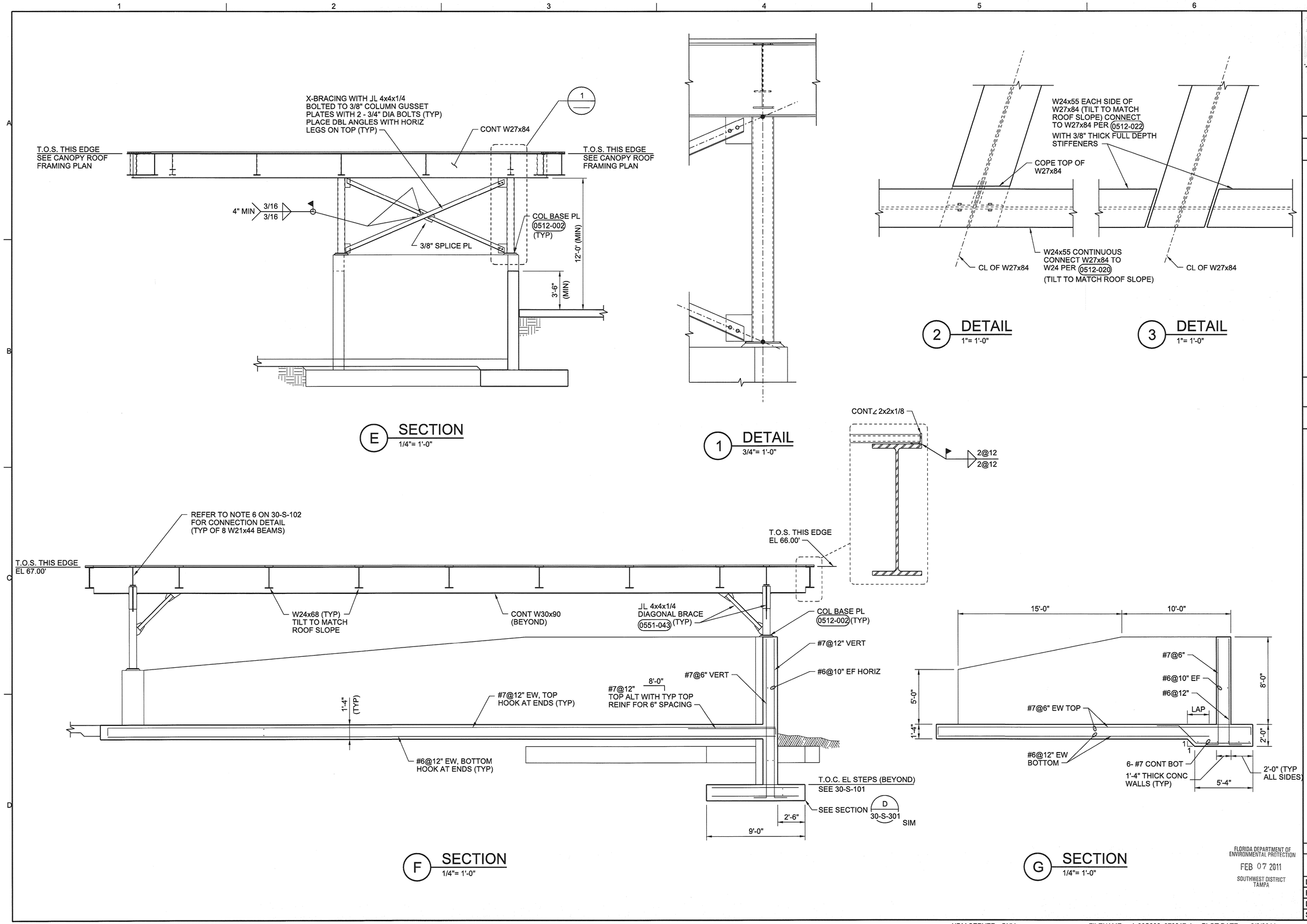

FLORIDA DEPARTMENT OF ENVIRONMENTAL PROTECTION
FEB 07 2011
SOUTHWEST DISTRICT TAMPA

NO	DATE	DESCRIPTION	APVR	N
NO.	DATE	REVISION	BY	APVD

DSGN M THUE | DR J PRUITT | CHK M CHRZANOWSKI | APVD M THUE

3011 SW WILLISTON RD
GAINESVILLE, FLORIDA 32608
EB0000072 AAC001992
Monrad R Thue PE 32071

SOLID WASTE SYSTEM
UPGRADE DESIGN
PASCO COUNTY
PASCO COUNTY, FLORIDA

CH2MHILL

STRUCTURAL
WEST PASCO SITE
CITIZEN DROP OFF AREA
SECTIONS AND DETAILS

VERIFY SCALE
BAR IS ONE INCH ON ORIGINAL DRAWING.
0 1"

DATE	FEBRUARY 2011
PROJ	378217
DWG	30-S-302
SHEET	

PERMITTING SUBMITTAL

REUSE OF DOCUMENTS: THIS DOCUMENT, AND THE IDEAS AND DESIGNS INCORPORATED HEREIN, AS AN INSTRUMENT OF PROFESSIONAL SERVICE, IS THE PROPERTY OF CH2M HILL AND IS NOT TO BE USED, IN WHOLE OR IN PART, FOR ANY OTHER PROJECT WITHOUT THE WRITTEN AUTHORIZATION OF CH2MHILL.
©CH2M HILL 2010. ALL RIGHTS RESERVED.

NDM SERVER: GNV FILENAME: dn30S302_378217.dgn PLOT DATE: 2/2/2011 PLOT TIME: 3:47:38 PM

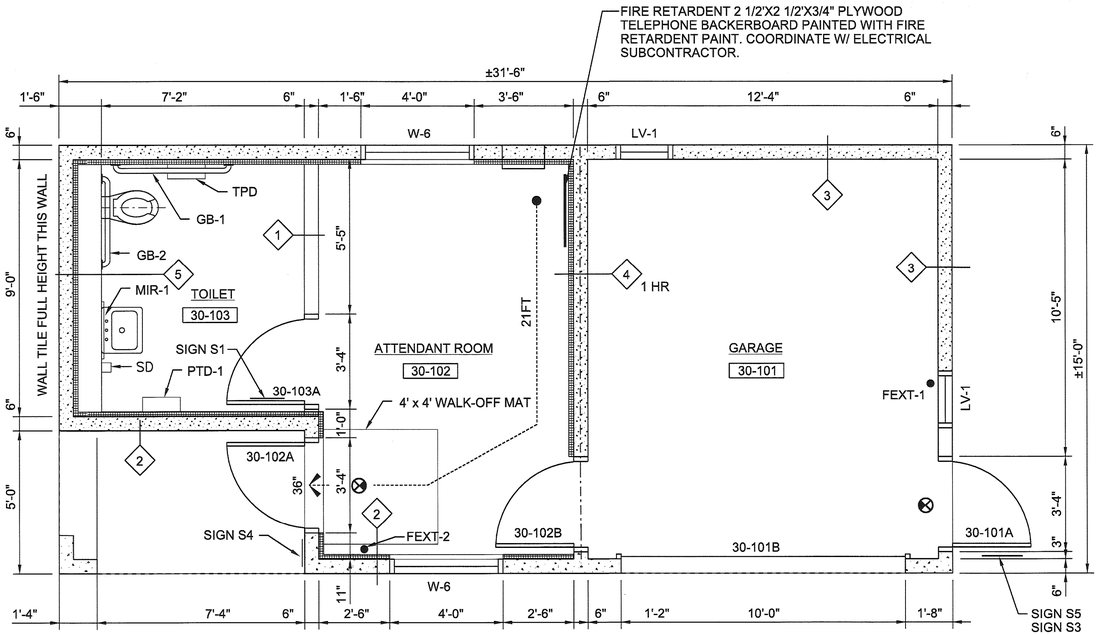

FLOOR PLAN/LIFE SAFETY PLAN

3/8"=1"

N

0 1 2 3

3/8"=1'

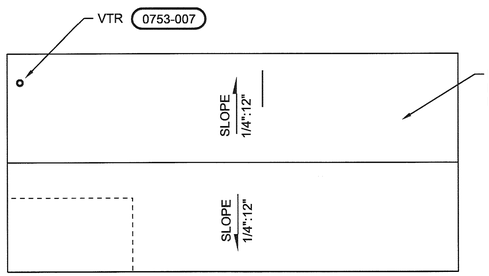

ROOF PLAN

3/16"=1"

N

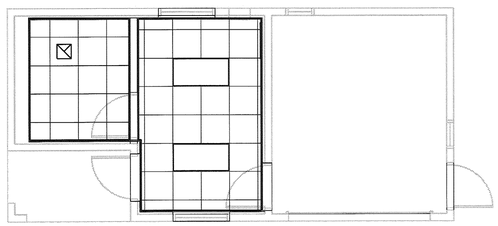

REFLECTED CEILING PLAN

3/16"=1"

N

GENERAL NOTES:

1. FOR SIGN INFORMATION AND TYPE DESCRIPTIONS SEE SPECIFICATIONS SECTION 10 14 00.
2. FOR ARCHITECTURAL LEGEND AND ADA FIXTURE AND ACCESSORY MOUNTING INFORMATION SEE SHEET 00-G-009.
3. FOR ABBREVIATIONS SEE SHEET 00-G-003.
4. FOR FIRE EXTINGUISHER INFORMATION SEE SPECIFICATIONS SECTION 10 44 00.
5. ALL DIMENSIONS ARE FROM FACE OF CONCRETE OR FINISH FACE OF STUD WALLS.
6. ALL FASTENERS USED TO CONNECT INTERIOR "BUILD-OUT" MEMBERS SHAL BE GALVANIZED CONCRETE SCREW ANCHORS AND SHALL BE PRE-DRILLED. COORDINATE WITH THE PRECAST BUILDING MANUFACTURER PRIOR TO PENETRATING CONCRETE WALLS, SLABS AND CEILINGS WITH ANY FASTENERS.

LEGEND

X'	TRAVEL DISTANCE (X = TOTAL DISTANCE TO EXIT IN FEET)
X"	EGRESS WIDTH (IN INCHES)
● F. EXT-1	FIRE EXTINGUISHER
● F. EXT-2	FIRE EXTINGUISHER
⊗	EXIT LIGHT, ONE SIDED
S1	SIGN CALL OUT
	1 HOUR RATED WALL

PRE-ENGINEERED BUILDINGS AND COMPONENTS IN FLORIDA

THE PRE-ENGINEERED BUILDING DRAWINGS AND SPECIFICATIONS INCLUDE CLADDING COMPONENTS SUCH AS WINDOWS, DOORS , FRAMES AND LOUVERS. SPECIFICATIONS SECTIONS QUALIFY EACH COMPONENTS AND DEVELOPED RESISTANT WIND PRESSURES ARE SHOWN ON THE DOOR AND HARDWARE SCHEDULE, THE WINDOW SCHEDULE AND THE LOUVER SCHEDULE.

THE PRE-ENGINEERED BUILDING MANUFACTURER MAY SUBMIT, AS PART OF THE SHOP DRAWINGS PROCESS, COMPONENTS TO BE SUPPLIED AND INSTALLED PROVIDING THIRD PARTY TESTING INFORMATION OR FLORIDA LICENSED ENGINEER CALCULATIONS ARE SUBMITTED FOR APPROVAL ESTABLISHING THE MANUFACTUER'S STANDARD COMPONENTS AS MEETING THE CRITERIA ESTABLISHED BY THE PROJECT SPECIFICATIONS FOR EACH CLADDING COMPONENT.

WALL TYPES

GENERAL WALL FRAMING NOTE:

GENERAL CONTRACTOR TO COORDINATE LOCATION OF EXTRA STUDS AS REQUIRED IN ALL WALL TYPES FOR SUPPORT AND/OR MOUNTING OF ELECTRICAL, PLUMBING OR HVAC EQUIPMENT AS SHOWN ON DRAWINGS.

1	0 HR	5/8" GYPSUM BD 3 5/8" GALV STEEL STUD @ 16" OC 5/8" GYPSUM BD. SOUND ATTENUATION INSULATION	FULL HEIGHT
2	0 HR	CONCRETE GALV Z-FURRING 5/8" GYPSUM BD. RIGID POLYISOCYANURATE R-19 MIN	FULL HEIGHT
3	0 HR	CONCRETE	FULL HEIGHT
4	1 HR	CONCRETE RIDGE POLYISOCYANURATE R-19 MIN 5/8" GYPSUM BD.	FULL HEIGHT
5	0 HR	CONCRETE RIDGE POLYISOCYANURATE R-19 MIN 8"min 5/8" CEMENTITIOUS BACKER BOARD GALV. "C" OR "Z" STUDS AS REQUIRED	FULL HEIGHT

CODE DATA

2007 FLORIDA BUILDING CODE AS AMENDED BY LOCAL AGENCIES

SEE DRAWING 00-G-006 FOR APPLICABLE CODES.

BUILDING: EAST CDA ATTENDANT BUILDING

GENERAL INFORMATION

USE AND OCCUPANCY CLASSIFICATION (CHAPTER 3)	GROUP B BUSINESS
CONSTRUCTION CLASSIFICATION (CHAPTER 6)	IIB

AREA AND HEIGHT LIMITATIONS

MAXIMUM ALLOWABLE AREA (TABLE 503)		23,000 SF
ACTUAL AREA:		488 SF
ACTUAL PER FLOOR:	BASEMENT	N/A
	FIRST	488 SF
	SECOND	N/A
MAXIMUM ALLOWABLE STORIES (TABLE 503)		4
ACTUAL NUMBER OF STORIES		1
MAXIMUM ALLOWABLE HEIGHT (TABLE 503)		55 FT
ACTUAL HEIGHT:		12'-4"

OCCUPANCY / EGRESS INFORMATION

DESIGN OCCUPANCY (TABLE 1004.1.2)	1 PER 100 GROSS SF= 2
ACTUAL NUMBER OF OCCUPANTS	1
EGRESS WIDTH BASED ON OCCUPANCY (TABLE 1005.1)	0.4 IN (36 IN PROVIDED)
ALLOWABLE DEAD END LENGTH (TABLE 1016.3)	20 FT
NUMBER OF EXITS	1
ALLOWABLE COMMON PATH OF TRAVEL (1013.3)	75 FT
MAX TRAVEL DISTANCE ALLOWED (TABLE 1015.1)	75 FT

REQUIRED FIRE RESISTANT RATINGS

BUILDING ELEMENTS (TABLE 601)	
STRUCTURAL FRAME	0 HR
EXTERIOR BEARING WALLS	0 HR
INTERIOR BEARING WALLS	0 HR
INTERIOR NON-BEARING WALLS	0 HR
FLOOR CONSTRUCTION	0 HR
ROOF CONSTRUCTION	0 HR
SHAFT ENCLOSURE (707.4)	N/A
STAIRWAY ENCLOSURE (1019.1)	N/A
CORRIDOR (TABLE 1016.1)	0 HR
OCCUPANCY SEPARATION (302.3.2)	N/A
INCIDENTAL USE AREAS (302.1.1)	N/A
FIRE SEPARATION DISTANCE (TABLE 602)	> 20 FT = 0 HR
DISTANCE FROM ADJACENT BUILDING OR PROPERTY LINE (TABLE 602)	> 20 FT = 0 HR

FIRE PROTECTION

SPRINKLERS	NOT REQUIRED, NOT PROVIDED
FIRE EXTINGUISHERS	PROVIDED
EXIT LIGHTING	PROVIDED

PLUMBING FIXTURES (FPC 403.1)

OCCUPANCY									
MINIMUM FIXTURE COUNT	WC		LAV		SHOWER	0	SINK	0
	M	F	M	F					
	1	1	1	1	DF	1	SS	1
ACTUAL FIXTURE COUNT	WC		LAV		SHOWER	0	SINK	1
	M	F	M	F					
	1		1		DF	0	SS	0
URINALS (FPC 419.2)	NOT MORE THAN 50% OF WC REQ.								

3011 SW WILLISTON RD
GAINESVILLE, FLORIDA 32608
EB0000072 AAC001992
Beth Trautwein AR 91388

SOLID WASTE SYSTEM
UPGRADE DESIGN
PASCO COUNTY
PASCO COUNTY, FLORIDA

CH2MHILL

ARCHITECTURAL
WEST PASCO SITE
CITIZEN DROP OFF ATTENDANT BUILDING
LIFE SAFETY & FLOOR PLAN

FLORIDA DEPARTMENT OF ENVIRONMENTAL PROTECTION
FEB 07 2011
SOUTHWEST DISTRICT TAMPA

VERIFY SCALE

BAR IS ONE INCH ON ORIGINAL DRAWING.
0 1"

DATE	FEBRUARY 2011
PROJ	378217
DWG	30-A-101
SHEET	

PERMITTING SUBMITTAL

NO.	DATE	DESCRIPTION	DR	CHK	APVD
DSGN	B TRAUTWEIN	REVISION	A COULLIAS	T DODGE	B TRAUTWEIN
NO.	DATE		DR	CHK	APVD
			APVR	BY	APVD
					N

REUSE OF DOCUMENTS: THIS DOCUMENT, AND THE IDEAS AND DESIGNS INCORPORATED HEREIN, AS AN INSTRUMENT OF PROFESSIONAL SERVICE, IS THE PROPERTY OF CH2M HILL AND IS NOT TO BE USED, IN WHOLE OR IN PART, FOR ANY OTHER PROJECT WITHOUT THE WRITTEN AUTHORIZATION OF CH2MHILL.
©CH2M HILL 2010. ALL RIGHTS RESERVED.

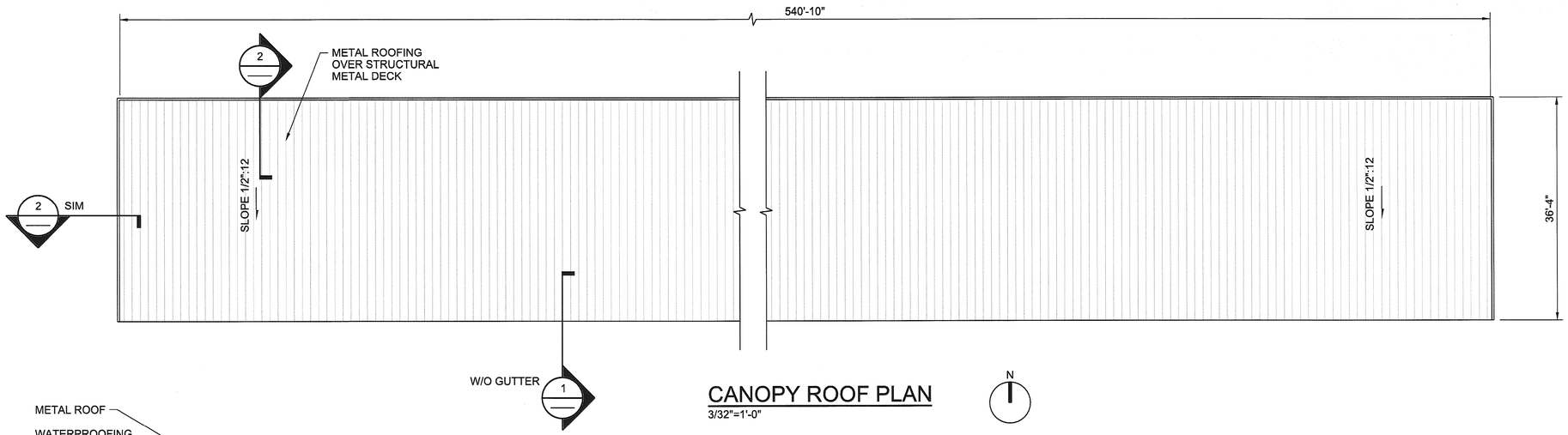

CANOPY ROOF PLAN

3/32"=1'-0"

N

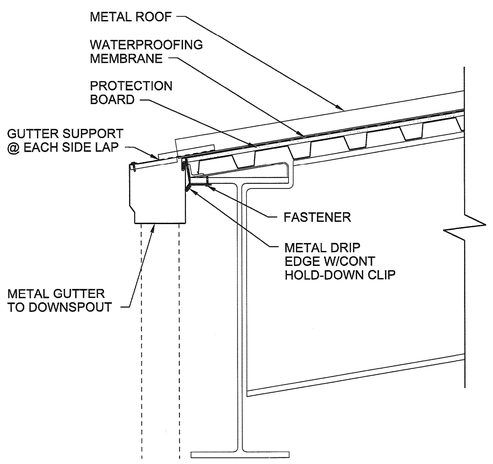

1 DETAIL

3/4"=1'-0"

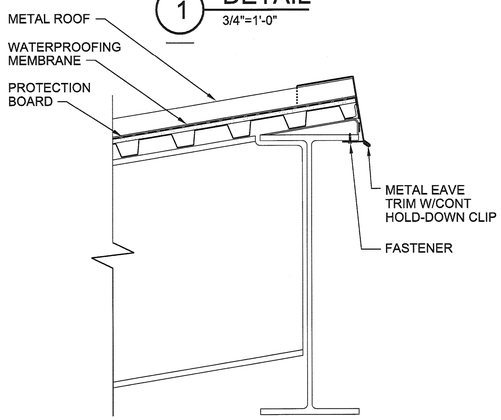

2 DETAIL

3/4"=1'-0"

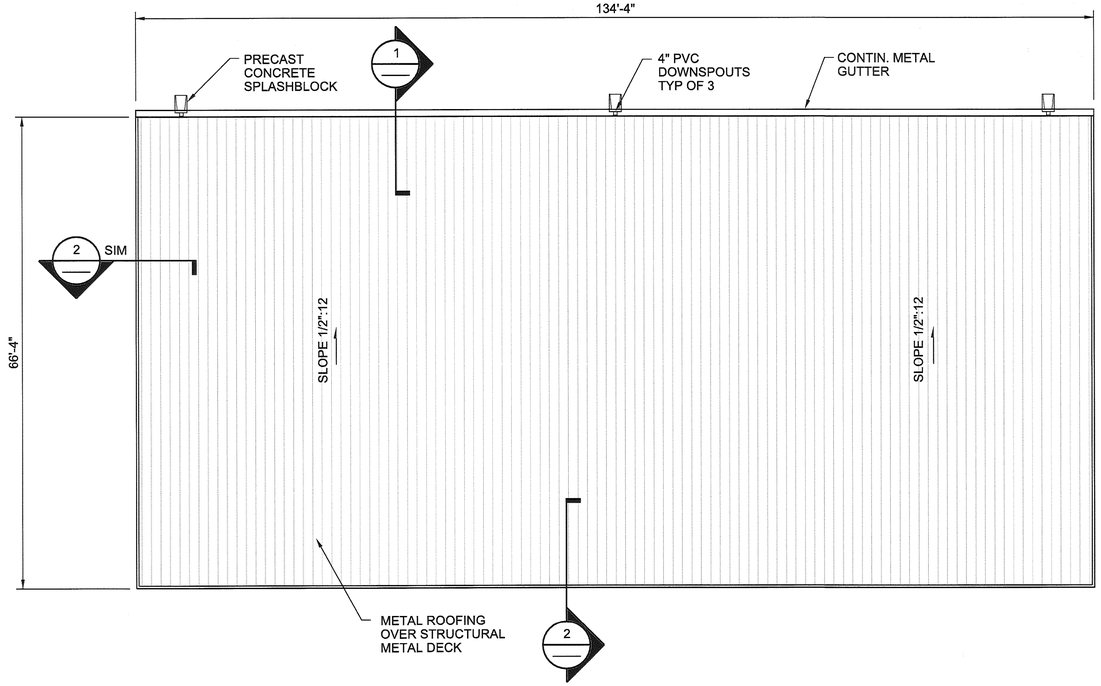

PUSH WALL CANOPY PLAN

3/32"=1'-0"

N

NOTE: LOCATE DOWNSPOUTS ON CENTERLINE OF STEEL COLUMNS AND PIPE TO PRECAST CONCRETE SPLASHBLOCKS ON GRADE

FLORIDA DEPARTMENT OF ENVIRONMENTAL PROTECTION
FEB 07 2011
SOUTHWEST DISTRICT
TAMPA

NO	DATE	DESCRIPTION	DR	CHK	APVD
DSGN	B TRAUTWEIN	B NARAMORE	T DODGE	B TRAUTWEIN	
NO.	DATE	REVISION		APVR	BY
				N	APVD

©CH2M HILL 2010. ALL RIGHTS RESERVED.
REUSE OF DOCUMENTS: THIS DOCUMENT, AND THE IDEAS AND DESIGNS INCORPORATED HEREIN, AS AN INSTRUMENT OF PROFESSIONAL SERVICE IS THE PROPERTY OF CH2M HILL AND IS NOT TO BE USED, IN WHOLE OR IN PART, FOR ANY OTHER PROJECT WITHOUT THE WRITTEN AUTHORIZATION OF CH2MHILL

CH2MHILL
3011 SW WILLISTON RD
GAINESVILLE, FLORIDA 32608
EB0000072 AAC001992
Beth Trautwein AR 91388

SOLID WASTE SYSTEM
UPGRADE DESIGN
PASCO COUNTY
PASCO COUNTY, FLORIDA

ARCHITECTURAL
WEST PASCO SITE
CITIZEN DROP OFF AREA
CANOPY ROOF PLANS

PERMITTING SUBMITTAL

VERIFY SCALE
BAR IS ONE INCH ON ORIGINAL DRAWING.
0 1"

DATE	FEBRUARY 2011
PROJ	378217
DWG	30-A-102
SHEET	

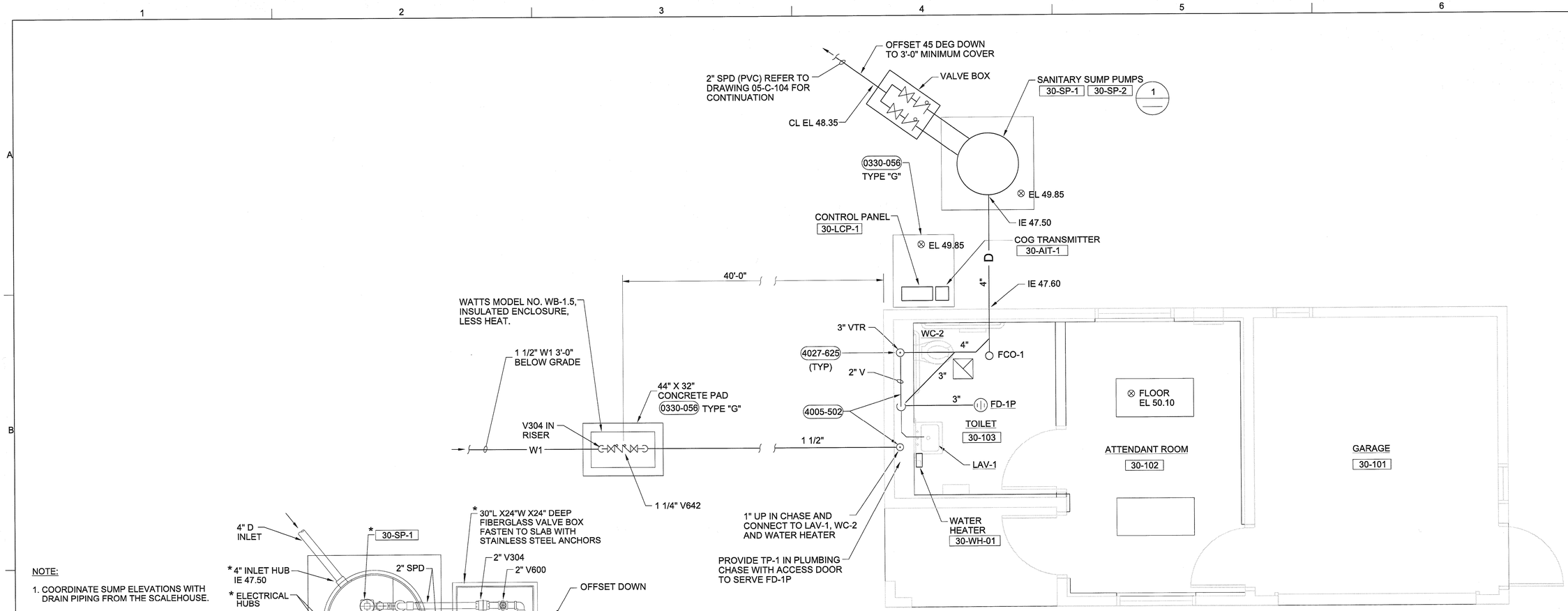

NOTE:

1. COORDINATE SUMP ELEVATIONS WITH DRAIN PIPING FROM THE SCALEHOUSE.
2. * INDICATES EQUIPMENT FURNISHED WITH THE SUMP PUMP PACKAGE SYSTEM.
3. GASKET SEALED ALUMINUM HATCH WITH LOCKING HASP.

PLAN

N

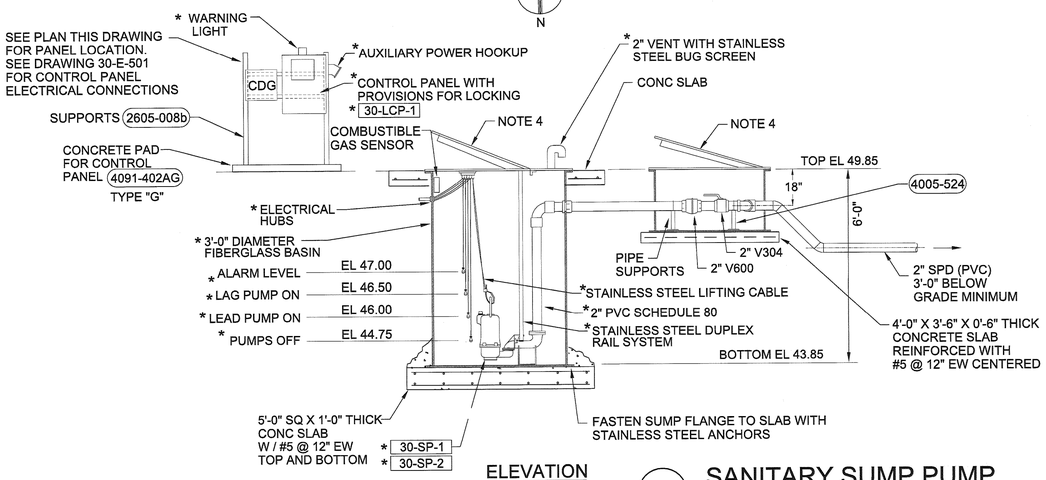

ELEVATION

1 SANITARY SUMP PUMP

NTS

NOTE:
REFER TO DRAWING 10-P-102
FOR FIXTURE SCHEDULE.

FLOOR PLAN

3/8"=1"

N

1 0 1 2 3 4 5 6 7

Scale: 3/8 INCH = 1 FOOT

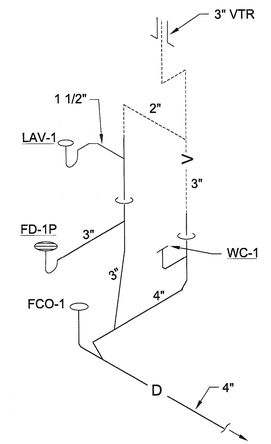

RISER DIAGRAM

3/8"=1"

FLORIDA DEPARTMENT OF ENVIRONMENTAL PROTECTION
FEB 07 2011
SOUTHWEST DISTRICT TAMPA

PERMITTING SUBMITTAL

REUSE OF DOCUMENTS: THIS DOCUMENT, AND THE IDEAS AND DESIGNS INCORPORATED HEREIN, AS AN INSTRUMENT OF PROFESSIONAL SERVICE, IS THE PROPERTY OF CH2M HILL AND IS NOT TO BE USED, IN WHOLE OR IN PART, FOR ANY OTHER PROJECT WITHOUT THE WRITTEN AUTHORIZATION OF CH2MHILL.

©CH2M HILL 2010. ALL RIGHTS RESERVED.

NO	DATE	DSGN
NO.	DATE	R BURNS

DESCRIPTION	CHK	APVD
REVISION	R BURNS	G SMARR

APVR	N
BY	APVD
C ANDERSON	

3011 SW WILLISTON RD
GAINESVILLE, FLORIDA 32608
EB00000072 AAC001992
Cassandra Jo Anderson PE 68461

SOLID WASTE SYSTEM
UPGRADE DESIGN
PASCO COUNTY
PASCO COUNTY, FLORIDA

CH2MHILL

PLUMBING
WEST PASCO SITE
CITIZEN DROP OFF ATTENDANT BUILDING
FLOOR PLAN

VERIFY SCALE
BAR IS ONE INCH ON ORIGINAL DRAWING.
0 1"

DATE	FEBRUARY 2011
PROJ	378217
DWG	30-P-101
SHEET	

NDM SERVER: GNV FILENAME: dn30P101_378217.dgn PLOT DATE: 2/2/2011 PLOT TIME: 4:34:02 PM

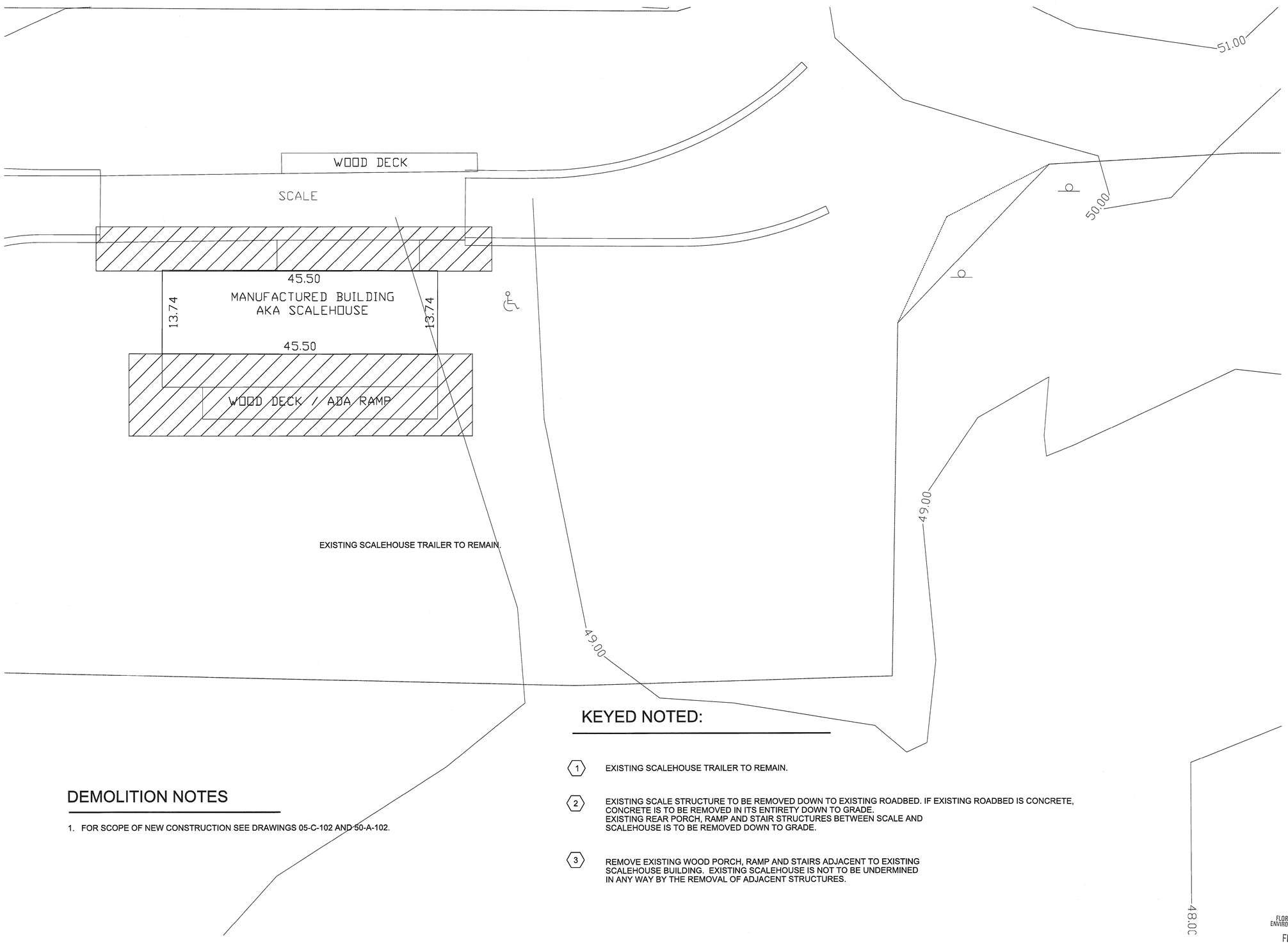

DEMOLITION NOTES

1. FOR SCOPE OF NEW CONSTRUCTION SEE DRAWINGS 05-C-102 AND 50-A-102.

KEYED NOTED:

1. EXISTING SCALEHOUSE TRAILER TO REMAIN.
2. EXISTING SCALE STRUCTURE TO BE REMOVED DOWN TO EXISTING ROADBED. IF EXISTING ROADBED IS CONCRETE, CONCRETE IS TO BE REMOVED IN ITS ENTIRETY DOWN TO GRADE. EXISTING REAR PORCH, RAMP AND STAIR STRUCTURES BETWEEN SCALE AND SCALEHOUSE IS TO BE REMOVED DOWN TO GRADE.
3. REMOVE EXISTING WOOD PORCH, RAMP AND STAIRS ADJACENT TO EXISTING SCALEHOUSE BUILDING. EXISTING SCALEHOUSE IS NOT TO BE UNDERMINED IN ANY WAY BY THE REMOVAL OF ADJACENT STRUCTURES.

FLORIDA DEPARTMENT OF ENVIRONMENTAL PROTECTION
FEB 07 2011
SOUTHWEST DISTRICT TAMPA

NO	DATE	DESCRIPTION	BY	APVD
NO.	DATE	REVISION	CHK	APVD
DSGN	B TRAUTWEIN	DR	A COULLIAS	T DODGE

APVR N
B TRAUTWEIN

©CH2M HILL 2010. ALL RIGHTS RESERVED.
REUSE OF DOCUMENTS: THIS DOCUMENT, AND THE IDEAS AND DESIGNS INCORPORATED HEREIN, AS AN INSTRUMENT OF PROFESSIONAL SERVICE, IS THE PROPERTY OF CH2M HILL AND IS NOT TO BE USED, IN WHOLE OR IN PART, FOR ANY OTHER PROJECT WITHOUT THE WRITTEN AUTHORIZATION OF CH2MHILL.

3011 SW WILLISTON RD
GAINESVILLE, FLORIDA 32608
EB0000072 AAC001992
Beth Trautwein AR 91388

SOLID WASTE SYSTEM
UPGRADE DESIGN
PASCO COUNTY
PASCO COUNTY, FLORIDA

CH2MHILL

ARCHITECTURAL
WEST PASCO SITE
OLD SCALEHOUSE RENOVATION
DEMOLITION PLAN

PERMITTING SUBMITTAL

VERIFY SCALE
BAR IS ONE INCH ON ORIGINAL DRAWING.
0 1"

DATE	FEBRUARY 2011
PROJ	378217
DWG	50-A-101
SHEET	

NDM SERVER: GNV FILENAME: dn50A102_378217.dgn PLOT DATE: 2/2/2011 PLOT TIME: 3:37:42 PM

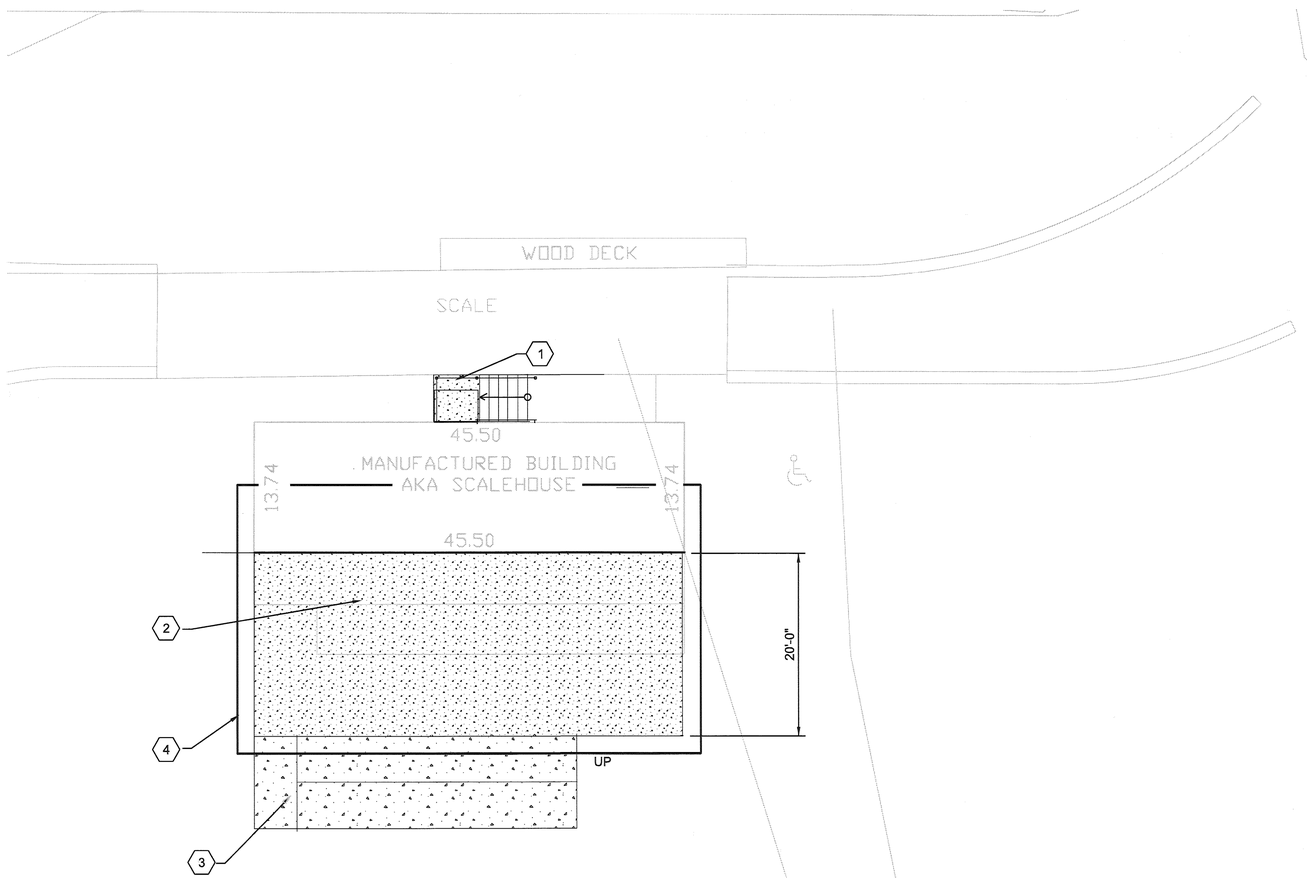

NEW CONSTRUCTION NOTES:

1. ALL DESIGN AND CONSTRUCTION TO BE PER FLORIDA BUILDING CODE 2007 AND OTHER LOCAL APPLICABLE CODES.
2. SEE 00-G-005 FOR ADDITIONAL DESIGN CRITERIA NOT CALLED OUT IN KEYED NOTES.

KEYED NOTED:

1. NEW STAIR AND CONCRETE STAIR LANDING, WITH ALUMINUM GUARDRAIL AND HANDRAIL TO SERVE EGRESS DOOR ON THE NORTH SIDE OF THE EXISTING SCALEHOUSE. DESIGN LIVE LOAD = 100 PSF.
2. NEW 20'-0" X +45'-0" CONCRETE PATIO DECK WHICH WILL BE AS LONG AS THE EXISTING SCALEHOUSE ,20'-0" WIDE AND AT ELEVATION EQUAL TO THE FINISH FLOOR OF THE EXISTING SCALEHOUSE. PROVIDE RETAINING WALLS OR SUPPORTING FOUNDATION FOR SLAB ON GRADE OR ELEVATED STRUCTURAL SLAB RESPECTIVELY. DESIGN LIVE LOAD = 100 PSF.
3. NEW HANDICAPPED RAMP FROM PARKING AREA TO LEVEL OF NEW CONCRETE PATIO DECK. HANDICAPPED RAMP SHALL BE CONCRETE WITH ALUMINUM HANDRAIL AND GUARDRAILS IN COMPLIANCE WITH CHAPTER 10 OF THE 2007 FLORIDA BUILDING CODE. DESIGN LIVE LOAD = 100 PSF.
4. NEW METAL STANDING SEAM ROOF CANOPY DESIGNED TO CREATE WATERTIGHT ROOF EXTENSION OVER NEW PATIO DECK ADJACENT TO EXISTING SCALEHOUSE. ROOF SHALL BE DETAILED TO CLOSE ALL OPENINGS BETWEEN SCALEHOUSE ROOF AND CANOPY ROOF. NEW CANOPY ROOF SHALL DRAIN USING GUTTERS, LEADERS AND CONCRETE SPLASH BLOCKS. STRUCTURAL CANOPY SUPPORT SYSTEM SHALL NOT INTRODUCE ANY LOAD ON THE EXISTING SCALEHOUSE STRUCTURE. DESIGN ROOF LIVE LOAD 20 PSF.

FLORIDA DEPARTMENT OF ENVIRONMENTAL PROTECTION
FEB 07 2011
SOUTHWEST DISTRICT TAMPA

NO	DATE	DESCRIPTION	DR	CHK	APVD
DSGN	B TRAUTWEIN	REVISION	A COULLIAS	T DODGE	B TRAUTWEIN
NO.	DATE		APVR	BY	APVD
					N

©Ch2M HILL 2010. ALL RIGHTS RESERVED.

3011 SW WILLISTON RD
GAINESVILLE, FLORIDA 32608
EB0000072 AAC001992
Beth Trautwein AR 91388

SOLID WASTE SYSTEM
UPGRADE DESIGN
PASCO COUNTY
PASCO COUNTY, FLORIDA

CH2MHILL

ARCHITECTURAL
WEST PASCO SITE
OLD SCALEHOUSE RENOVATION
NEW CONSTRUCTION PLAN

REUSE OF DOCUMENTS: THIS DOCUMENT, AND THE IDEAS AND DESIGNS INCORPORATED HEREIN, AS AN INSTRUMENT OF PROFESSIONAL SERVICE, IS THE PROPERTY OF CH2M HILL AND IS NOT TO BE USED, IN WHOLE OR IN PART, FOR ANY OTHER PROJECT WITHOUT THE WRITTEN AUTHORIZATION OF CH2MHILL.

PERMITTING SUBMITTAL

VERIFY SCALE
BAR IS ONE INCH ON ORIGINAL DRAWING.
0 1"

DATE	FEBRUARY 2011
PROJ	378217
DWG	50-A-102
SHEET	

NDM SERVER: GNV FILENAME: dn50A101_378217.dgn PLOT DATE: 2/2/2011 PLOT TIME: 3:34:40 PM