Environmental Consultants
and Contractors

4041 Park Oaks Boulevard
Suite 100
Tampa, FL 33610

813 621-0080
FAX 813 623-6757
www.scsengineers.com

SCS ENGINEERS

February 22, 2011
File No. 09207049.06

Dept. Of Environmental Protection
FEB 22 2011
Southwest District

Mr. Steve Morgan
Florida Department of Environmental Protection
Southwest District
13051 N. Telecom Parkway
Temple Terrace, Florida 33637-0926

Subject: Citrus County Central Landfill
Request for Minor Modification – Phase 1/1A Leachate Riser Rehabilitation Pump
Permit No. 21375-018-SO/01

THIS WAS YOUR ORIGINAL LETTER. THANKS

Dear Mr. Morgan:

In response to the Florida Department of Environmental Protection item 1 of the request for additional information (RAI) No. 1 dated February 7, 2011, for the Phase 1/1A Leachate Riser Rehabilitation - Final Report, SCS Engineers (SCS) is submitting this minor permit modification. This letter request is to modify the pumps in all the rehabilitated risers located in the Phases 1 and 1A cells.

The permitted leachate pumping system station consists of two equal leachate collection pumps handling flow from the primary leachate collection system and two leachate detection pumps for handling flow from the secondary leachate detection system. The leachate collection pump controls automatically alternate the operation of the two pumps, with only one pump required to handle normal flows. The second pump will automatically start when water levels in the sump exceed a pre-set level. The leachate detection system is intended to collect only the leachate which passes or leaks through the first liner; thus, required capacity is minimal.

SCS reviewed the historical leachate generation quantities for Phase 1 and 1A and determined that approximately 6,000 gallons per day (gpd) of leachate is being generated from this area. The reported pumping rate from the operators' observations of the flow meter at the master lift station indicates that one of the permitted EPG (model WSDPT 30-5) pump pumps about 50 gallons per minute (gpm) for 2 hours per day and the other permitted EPG pump only produces about 16 gpm. Please see the attached EPG pump curve included in Attachment A.

The County installed a DAB pump model S16/10 in one of the primary riser and reused the existing permitted detection pump in the detection riser. The second primary riser and the second detection riser are no longer in use and now serve as a 6" conduit for the transducers. As noted by the HELP model, which determines the amount of leachate generated and head over the leachate collection and detection systems throughout the life of the landfill cell, as cell waste volume increases the leachate flow begins to drop. Based upon a TDH of 160 ft, the new primary DAB pump would have a pumping rate of approximately 20 gpm (see Attachment B for

manufacturing details including pump curve). The new pump will need to run for approximately 5 hours per day to remove the historical flow of 6,000 gpd and approximately 10 hours per day to remove the historical high flow of 12,000 gpd. This pump is a better match than the original permitted pump due to lower leachate flows than when permitted and provides adequate running time for the pump to remove the leachate flows. Please refer to Attachment 1 for the supporting calculations demonstrating that the replacement pump is of sufficient size and capacity to adequately remove the quantities of leachate generated in Phase 1 and 1A.

The County has purchased a spare DAB S16/10 pump which will be kept on site for use when necessary.

As discussed in our phone conversation the minor permit modification application fee of $250 is waived as we will be including this permit modification letter with the request for the leachate effluent regulatory level change submitted on January 20, 2011.

If you have any questions regarding this report, please contact the undersigned at (813) 621-0080.

Sincerely,

Dominique H. Bramlett, P.E.
Senior Project Engineer
SCS ENGINEERS

C. Ed Hilton, P.E.
Vice President
SCS ENGINEERS

DHB/CEH:dhb

cc: Casey Stephens – Citrus County

Attachments

ATTACHMENT 1

CALCULATIONS

SCS ENGINEERS

SHEET 1 of 1

CLIENT	PROJECT	JOB NO.
Citrus County	Phase 1 and 1A Rehabilitation Pumps	09207049.06

SUBJECT	BY	DATE
Replacement Pumps Phases 1 and 1A	DHB	2/21/2011
	CHECKED CEW	DATE 2/22/11

Objective:
1) Verify and provide supporting documentation that the new permanet pumps will be the same size, type, and capacity as the replaced permitted leachate pumps.
2) If replacement pumps are of a different type, size, or capacity, provide supporting informaiton and calculations that demonstrate the replacement pumps are of sufficieint size and capacity to adequately remove the quantities of leachate generated in Phases 1 and 1A.

Given:
The primary collection pump that got stuck is the EPG WSDPT 30-5. Citrus County utilities staff reports it was pumping about 50 gpm, which on the pump curve would put the TDH at 250 ft. (see Attachment A)

EXISTING PUMP EPG WSDPT 30-5
Q = 50 gpm, TDH = 250 ft

Per historical flow data it looks like 6,000 gpd is a fairly consistent daily total. Based upon the pumping rate, the pump runs approximately 2 hours per day.

EXISTING PUMP EPG WSDPT 30-5
Pumps 50 gpm or about 2 hours per day

Replacement pump is the DAB pump (Grundfos) S16/10. At a TDH of 160 ft on the pump curve the replacement pump has a flow rate of approximately 20 gpm. (see Attachment B)

REPLACEMENT PUMP DAB S16/10
Q = 20 gpm, TDH = 160 ft

Approach:
Verify if replacement pump is the same size, type and capacity.
Verify that the replacement pump can handle the flow.

The replacement pump has a new pumping rate of 20 gpm at a TDH of 160 ft, therefore, the new pump will need to run for 300 minutes a day (i.e. 5 hours) to remove the average historical flow of 6,000 gpd and 10 hours to remove the average high historical flow of 12,000 gpd.

Conclusion:
The replacement pump is adequately sized to handle the historical flow rate of 6,000 gpd. It will take 5 hours a day to remove the historical average flow and 10 hours to remove the average high historical flow of 12,000 gpd.

ATTACHMENT A

EXISTING PERMITTED PUMPS

SERIES 30 SurePump™

Flow Range 50-200 GPM

60 Hz

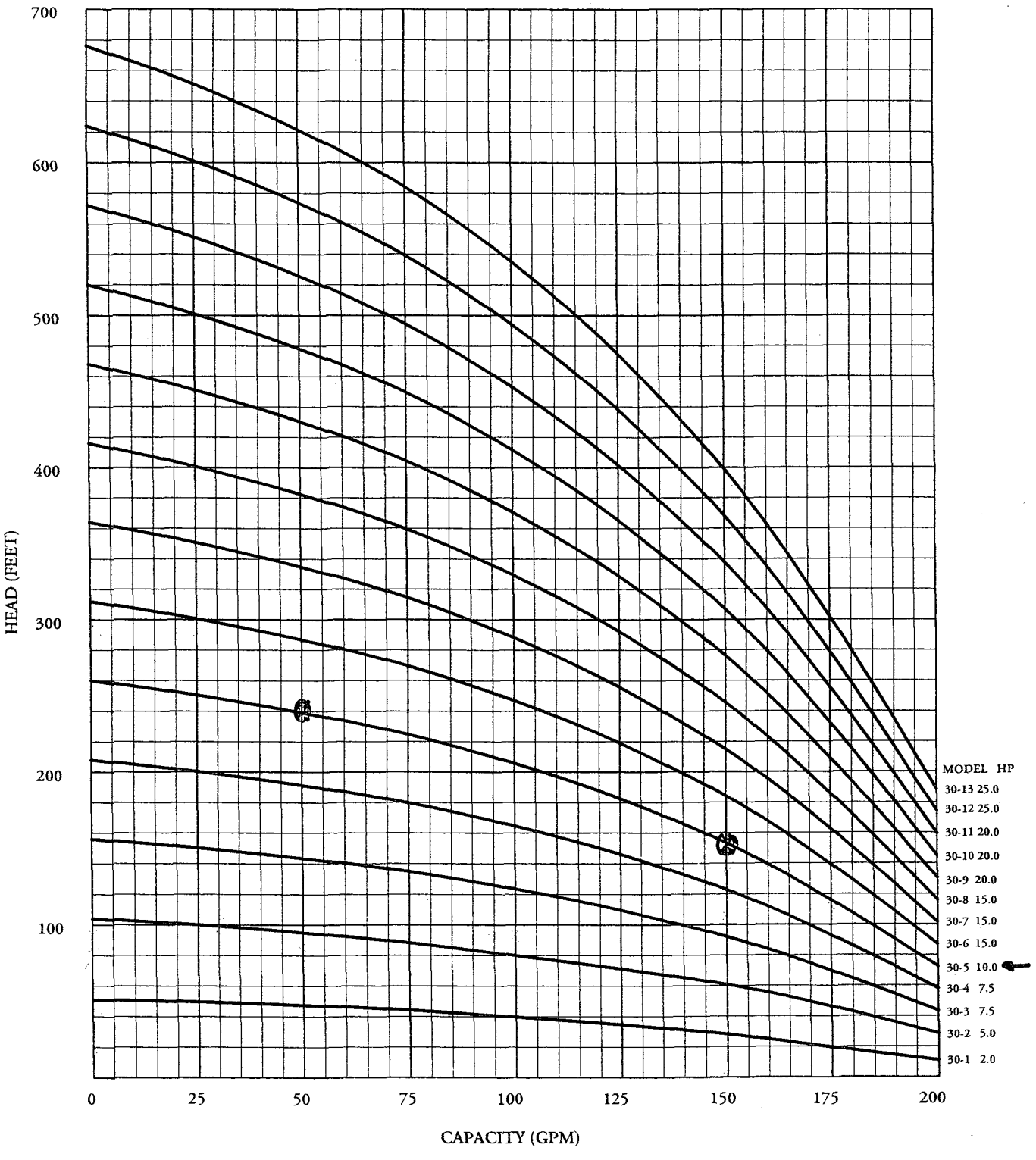

DATA SUBJECT TO CHANGE WITHOUT NOTICE

© 2003 EPG Companies Inc.
SurePump is a Reg. TM of EPG Companies Inc.

ATTACHMENT B

REPLACEMENT PUMPS

S

4" SUBMERSIBLE PUMPS

DAB PUMP PERFORMANCE

Tesla Submersible motors

GENERAL DATA

Applications

Submersible pumps for 4" wells or larger generate a wide range of heads and flow rates. Units may used in a variety of water lifting and presurizing applications in domestic, irrigation and light industrial installations.

Construction features of the pump

Multi-stage, centrifugal pump with radial or semi-axial impellers. Pump and motor connect with a rigid coupling. Technopolymer impellers with wear parts in stainless steel, operate on floating adjustment rings in abrasion resistant material, technopolymer diffusers provide resistance to heavy wear. Pump jacket and shaft constructed of stainless steel. Suction interconnector and discharge head with check valve constructed of stainless steel.

Construction features of the motor
DAB motor by Tesla

Submerged asynchronous 2-pole electric motor made entirely of AISI 304 stainless steel, with flange according to NEMA-4".
Developed using a technology based on the use of inert gases (ARGON base) in filling the stator, in order to disperse the heat produced and avoid any type of dilation inside the motor.
This characteristic ensures that the product is "environmentally" friendly, since no toxic or harmful substances are used. The PSC (Permanent Split Capacitor) single-phase motors guarantee excellent performance under most operating conditions. The stator is encapsulated in a sealed AISI 304 stainless steel casing.
Insulation class: F
Starts/hour: 40
Supply voltage: single phase 115 V 60 Hz –230 V 60 Hz
three phase 230 V 60 Hz –460 V 60 Hz

S

DAB PUMP PERFORMANCE Tesla Submersible motors

4" SUBMERSIBLE PUMPS

Technical Data

N.	PARTS	MATERIALS
3	SUCTION INTERCONNECTOR	PRECISION CAST AISI 304 STEEL
4	IMPELLER	TECHNOPOLYMER A WITH STEEL SHIM STAINLESS STEEL AISI 304 X5CrNi1810 - UNI 6900/71
6	DIFFUSER	NORYL®
7	SHAFT WITH COUPLING	STAINLESS STEEL AISI 304 X5CrNi1810 - UNI 6900/71
18	IMPELLER LOCK NUT	STAINLESS STEEL
39	CABLE GUARD	STAINLESS STEEL AISI 304 X5CrNi1810 - UNI 6900/71
42	STRAINER	STAINLESS STEEL
49	CHECK VALVE	STAINLESS STEEL AISI 304 X5CrNi1810 - UNI 6900/71
54	MOTOR	STAINLESS STEEL AISI 304 X5CrNi1810 - UNI 6900/71
55	SPACER BUSHING	NORYL®
57	SUPPORT	NORYL®
58	INTERMEDIATE BUSHING	STAINLESS STEEL AISI 304 X5CrNi1810 - UNI 6900/71
69	PUMP LINING	STAINLESS STEEL AISI 304 X5CrNi1810 - UNI 6900/71
98	DIFFUSER BODY	NORYL®
117	DISCHARGE HEAD	PRECISION CAST AISI 304 STEEL
191	FRONT ADJUSTMENT RING	ABRASION-PROOF SYNTHETIC MATERIAL
192	REAR ADJUSTMENT RING	ABRASION-PROOF SYNTHETIC MATERIAL
270	UPPER SHAFT GUIDE BUSHING	RUBBER
271	INTERMEDIATE SHAFT GUIDE BUSHING	ABRASION-PROOF SYNTHETIC MATERIAL

NORYL® is a registred trademark of General Electric Company

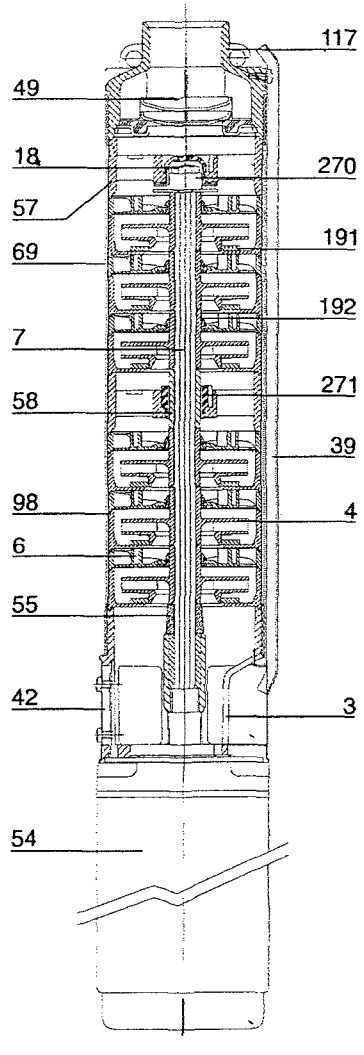

S

S
4" SUBMERSIBLE PUMPS

Technical Data

- Operating range:	from 1.6 to122 US G.P.M. (from 0.36 to 28 m3/h) with heads up to 1030 feet;
- Liquid requirements:	Free from solids or abrasive substances, not viscous, *non aggressive, non crystallized, chemically neutral, close to* the characteristics of water.
- Liquid temperature range:	32°F to 104°F
- Installation:	in 4" wells or biggers tanks and cisterns, in a vertical position.
- Max spherical solid:	Ø 1/16"
- Ph level:	6 - 9

Model number definition:

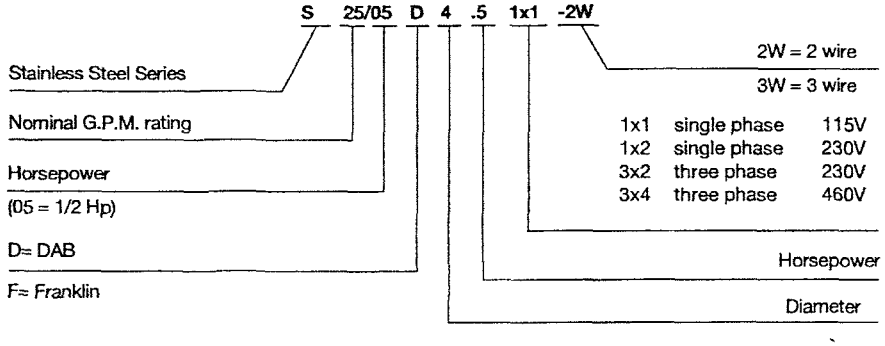

S16

DAB PUMP PERFORMANCE tesla SUBMERSIBLE MOTORS

Curve tolerance according to ISO 9906. Liquid temperature range: from 32°F to 104°F

CAPACITIES IN U.S. GALLONS PER MINUTE - DEPTH TO PUMPING WATER LEVEL (LIFT) IN FEET						
PUMP MODEL	PSI	20	40	60	80	100
S16/03	0		23.6	20.0	14.0	6.0
	20	19.0	13.0	1.0		
	30	9.0	0.5			
	Shut-off PSI	39.0	30.3	21.6	13.0	4.3

CAPACITIES IN U.S. GALLONS PER MINUTE - DEPTH TO PUMPING WATER LEVEL (LIFT) IN FEET								
PUMP MODEL	PSI	20	40	60	80	100	120	140
S16/05	0				22.0	20.0	15.0	10.0
	20	23.5	22.0	18.4	15.0	9.0		
	30	20.0	17.4	12.0	5.0			
	40	17.0	11.9	2.3				
	50	10.6						
	Shut-off PSI	58.4	49.8	41.1	32.5	23.8	15.2	6.5

CAPACITIES IN U.S. GALLONS PER MINUTE - DEPTH TO PUMPING WATER LEVEL (LIFT) IN FEET											
PUMP MODEL	PSI	20	40	60	80	100	120	140	160	180	200
S16/07	0					22.5	20.5	18.0	15.0	11.5	6.0
	20		23.5	22.2	20.0	17.6	14.0	10.0	6.0		
	30	23.0	22.0	20.0	17.0	13.0	8.0	1.3			
	40	22.0	20.0	17.0	13.0	8.0					
	50	18.6	15.6	12.0	8.0						
	60	15.0	11.5	7.0							
	Shut-off PSI	82.3	73.6	64.9	56.3	47.6	39.0	30.3	21.5	13.0	4.3

CAPACITIES IN U.S. GALLONS PER MINUTE - DEPTH TO PUMPING WATER LEVEL (LIFT) IN FEET													
PUMP MODEL	PSI	20	40	60	80	100	120	140	160	180	200	220	240	260
S16/10	0								23.4	17.5	15.0	12.0	8.6	3.0
	20						19.0	17.6	15.0	12.0	8.0			
	30					18.0	16.0	13.7	10.5	6.0				
	40				18.0	15.9	13.6	10.4	5.9					
	50			18.1	13.9	13.0	9.0	6.0						
	60		17.5	15.0	13.0	8.9	3.0							
	Shut-off PSI	106.1	97.4	88.7	80.1	71.4	62.8	54.1	45.5	36.8	28.1	19.5	10.8	2.2

CAPACITIES IN U.S. GALLONS PER MINUTE - DEPTH TO PUMPING WATER LEVEL (LIFT) IN FEET																
PUMP MODEL	PSI	20	40	60	80	100	120	140	160	180	200	220	240	260	280	300	340
S16/15	0								23.4	22.3	21.3	20.0	17.6	17.2	15.7	13.6	8.6
	20						23.0	22.0	21.0	19.8	18.3	16.8	15.7	13.5	11.0	8.0	
	30					22.8	21.6	20.5	19.2	17.8	16.2	14.4	12.4	9.5	6.0	0.2	
	40			23.5	22.8	21.6	20.5	19.2	17.8	16.2	14.4	12.4	9.5	6.0			
	50		23.5	22.5	21.5	20.3	19.2	18.0	16.0	14.5	12.0	9.5	6.0				
	60	23.4	22.3	21.3	20.0	17.6	17.2	15.7	13.6	11.6	8.6	4.9					
	Shut-off PSI	151.5	142.9	134.2	125.5	116.9	108.2	99.6	90.9	82.3	73.6	64.9	56.3	47.6	39.0	30.3	13.0

CAPACITIES IN U.S. GALLONS PER MINUTE - DEPTH TO PUMPING WATER LEVEL (LIFT) IN FEET																		
PUMP MODEL	PSI	20	40	60	80	100	120	140	160	180	200	220	240	260	280	300	340	400	460
S16/20	0										23.6	22.8	22.0	21.0	20.0	19.0	17.0	12.6	6.0
	20								23.4	22.5	21.6	20.8	19.8	18.6	17.6	16.2	13.7	8.0	
	30							23.2	22.2	21.2	20.5	19.5	18.4	17.2	16.0	14.6	11.7	4.0	
	40						23.2	22.2	21.2	20.5	19.5	18.4	17.2	16.0	14.6	13.0	10.0		
	50					23.0	22.1	21.1	20.4	19.4	18.3	17.1	15.9	14.5	12.9	11.2	6.7		
	60				22.8	22.0	21.0	20.0	19.0	18.0	17.0	15.5	14.0	12.5	11.0	8.7			
	Shut-off PSI	197.0	188.3	179.7	171.0	162.3	153.7	145.0	136.4	127.7	119.0	110.4	101.7	93.1	84.4	75.8	58.4	32.5	6.5

CAPACITIES IN U.S. GALLONS PER MINUTE - DEPTH TO PUMPING WATER LEVEL (LIFT) IN FEET																					
PUMP MODEL	PSI	20	40	60	80	100	120	140	160	180	200	220	240	260	280	300	340	400	460	520	600
S16/30	0														23.4	23.0	21.6	19.7	17.6	14.8	10.0
	20												23.2	22.6	22.3	21.5	20.2	18.0	15.5	12.3	5.6
	30											23.0	22.5	22.0	21.3	20.6	19.5	17.5	14.4	10.6	
	40										23.0	22.5	22.0	21.3	20.6	20.0	18.6	16.2	13.2	9.0	
	50								23.6	23.0	22.5	21.8	21.3	20.5	19.7	19.2	17.8	15.2	11.5	6.8	
	60							23.4	23.0	22.6	21.6	21.0	20.5	19.7	19.0	18.2	16.7	13.6	10.0	2.0	
	Shut-off PSI	277.1	268.4	259.7	251.1	242.4	233.8	225.1	216.5	207.8	199.1	190.5	181.8	173.2	164.5	155.8	138.5	112.6	86.6	60.8	26.0

CAPACITIES IN U.S. GALLONS PER MINUTE - DEPTH TO PUMPING WATER LEVEL (LIFT) IN FEET																						
PUMP MODEL	PSI	20	40	60	80	100	120	140	160	180	200	220	240	260	280	300	340	400	460	520	600	700	800
S16/50	0																	22.5	21.3	19.6	17.3	13.5	7.5
	20																23.0	21.5	20.0	18.0	15.5	11.2	
	30															23.5	23.3	22.2	21.0	19.3	17.5	14.5	10.0
	40													23.5	23.2	22.9	22.0	20.5	18.6	16.9	13.8	8.1	
	50												23.5	23.2	22.5	22.2	21.4	19.8	18.0	16.0	12.5	6.0	
	60											23.5	23.2	22.5	22.1	21.5	20.5	19.1	17.3	15.2	11.6	2.0	
	Shut-off PSI	355.8	347.2	338.5	329.9	321.2	312.6	303.9	295.2	286.6	277.9	269.3	260.6	251.9	243.3	234.6	217.3	191.3	165.4	139.4	104.8	61.5	18.2

CAPACITIES IN U.S. GALLONS PER MINUTE - DEPTH TO PUMPING WATER LEVEL (LIFT) IN FEET																							
PUMP MODEL	PSI	20	40	60	80	100	120	140	160	180	200	220	240	260	280	300	340	400	460	520	600	700	800	900	1000
S16/50P	0																		23.2	22.0	20.3	18.0	15.3	11.6	6.0
	20																	23.5	22.2	21.0	19.2	16.6	13.8	9.6	
	30																	22.7	21.5	20.5	18.6	16.0	13.0	8.4	
	40																23.4	22.5	21.4	20.0	18.2	15.5	12.2	6.6	
	50																23.2	22.1	20.9	19.5	17.6	14.6	11.0	4.0	
	60															23.5	22.6	21.5	20.4	19.0	17.0	14.0	10.0		
	Shut-off PSI	435.1	426.4	417.7	409.1	400.4	391.8	383.1	374.5	365.8	357.1	348.5	339.8	331.2	322.5	313.9	296.5	270.6	244.6	218.6	184.0	140.7	97.4	54.1	10.8

S16

Curve tolerance according to ISO 9906. Liquid temperature range: from 32°F to 104°F

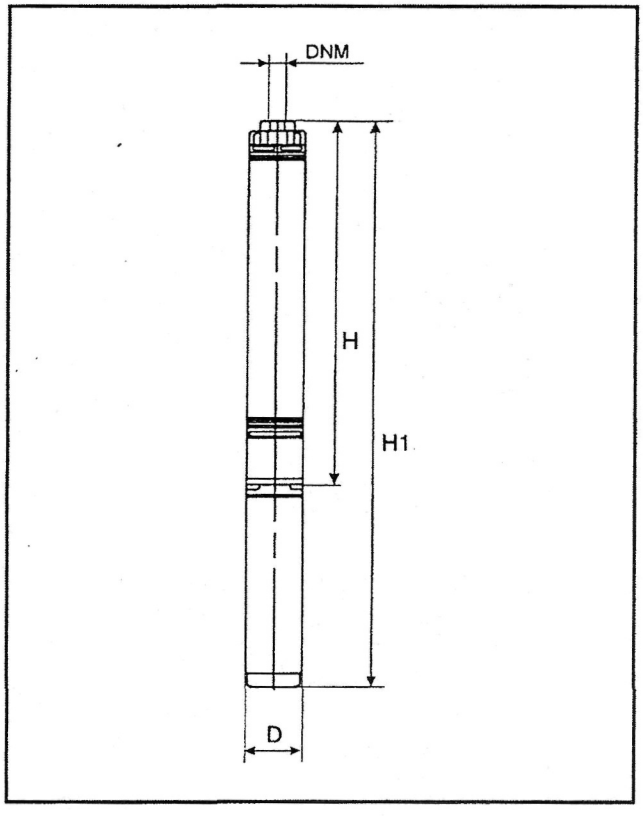

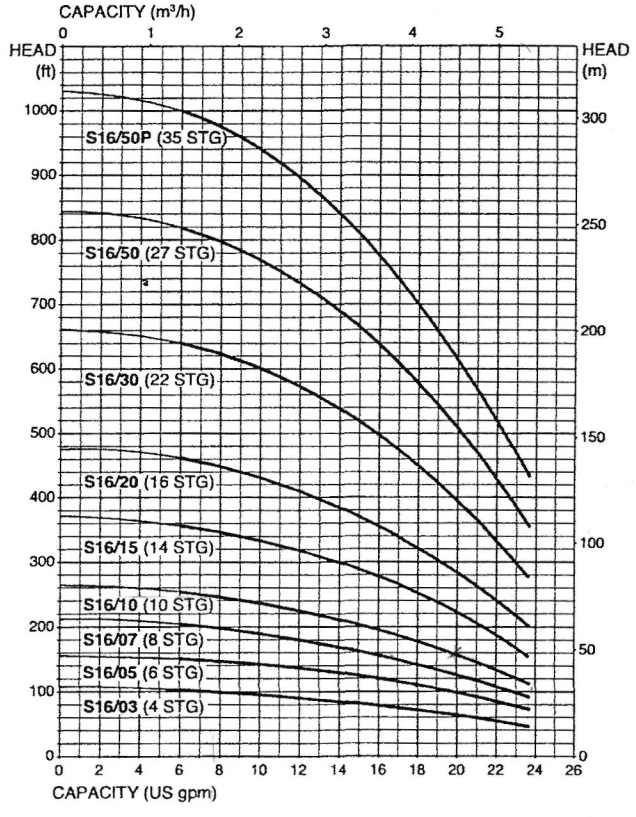

MODEL	Stages	ELECTRICAL DATA HP	KW	Service Factor	D (in.)	DNM (in.)	WEIGHT Pump only lb	Pump only H (in)
S16/03	4	1/3	0.44	1.75	3.82	1 1/4" NPT	7.05	12.2
S16/05	6	1/2	0.59	1.6	3.82	1 1/4" NPT	8.15	14.7
S16/07	8	3/4	0.83	1.5	3.82	1 1/4" NPT	9.25	17.3
* **S16/10**	10	1	1	1.4	3.82	1 1/4" NPT	10.13	19.8
S16/15	14	1 1/2	1.4	1.3	3.82	1 1/4" NPT	11.01	25.0
S16/20	18	2	1.8	1.25	3.82	1 1/4" NPT	13	30.1
S16/30	25	3	2.5	1.15	3.82	1 1/4" NPT	15.85	39.0
S16/50	32	5	4.2	1.15	3.82	1 1/4" NPT	17.82	49.3
S16/50P	39	5	4.2	1.15	3.82	1 1/4" NPT	24.23	58.2