HDR | ONE COMPANY *Many Solutions*℠

Transmittal

Attention: Mr. Steve Morgan Date: September 20, 2011 Job No: 153175

To: Florida Department of Environmental Protection
Southwest District
13051 N. Telecom Parkway
Temple Terrace, FL 33637

Phone: 813-632-7600

Regarding: Central County Solid Waste Disposal Complex (CCSWDC)
Phase I Closure and Landfill Gas Collection System
Permit No. 130542-014-SF/01 - Specific Condition No. B.4.a

We are sending you:

☒ **Attached** ☐ **Under separate cover via _____ the following items**

☐ Shop drawings ☐ Prints ☐ Plans ☐ Samples ☐ Specifications
☐ Copy of letter ☐ Change Order ☒ Other See Below

Copies	Date	No.	Description
1			Binder with 11x17 Drawings, Conformed Specifications and CQA Plans
1			Set of Full Size Drawings

Dept. Of Environmental Protection
SEP 21 2011
Southwest District

Dept. Of Environmental Protection
SEP 21 2011
Southwest District

These are transmitted as checked below:

☒ For approval ☐ Approved as submitted ☐ Resubmit _____ copies for approval
☒ For your use ☐ Approved as noted ☐ Submit _____ copies for distribution
☐ As requested ☐ Returned for corrections ☐ Return _____ corrected prints
☐ For review/comment ☐ Other _____
☐ For bids due _____ ☐ Prints returned after loan to us

Remarks

Copy to File

Signed Jason Timmons, PE

If enclosures are not as noted, please notify us at once

Sarasota County

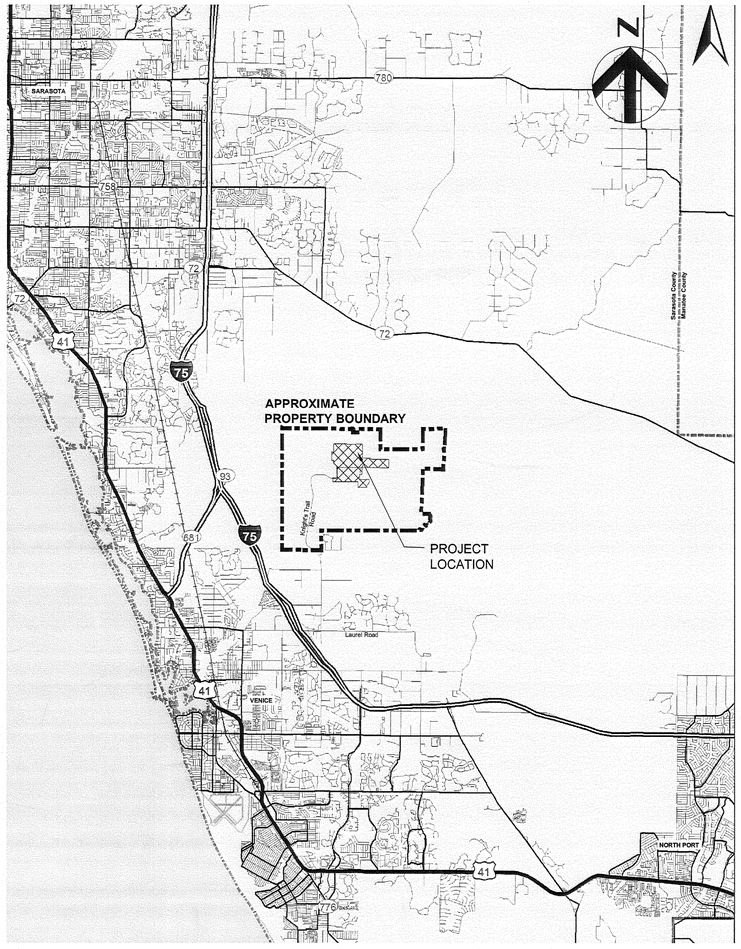

sunshine state ONE CALL of florida

Always call 811 before you dig.
www.callsunshine.com

PHASE I CLASS I LANDFILL CLOSURE AND LANDFILL GAS COLLECTION SYSTEM CONSTRUCTION DRAWINGS

ADDRESS: 4000 KNIGHTS TRAIL ROAD
NOKOMIS, FLORIDA 34275

PROJECT NO. 00096-130530-005

SARASOTA COUNTY, FLORIDA

CIP NO. 95206

BID NO. 111383CS

ISSUED FOR CONSTRUCTION

OCTOBER 2011

HDR

HDR Engineering, Inc.
2621 Cattlemen Road, Suite 106
Sarasota, FL 34232-62121
(941) 342-2700
CA00004213

INDEX OF DRAWINGS
PHASE I CLASS I LANDFILL CLOSURE AND LANDFILL GAS COLLECTION SYSTEM DRAWINGS

Sheet Number	Sheet Title
G–01	COVER SHEET
G–02	GENERAL NOTES LEGEND AND ABBREVIATIONS
C–01	OVERALL SITE PLAN
C–02	BORROW AREA MAP
C–03	BORROW AREA MAP (2 OF 2)
C–04	INTERMEDIATE COVER GRADES AND EXISTING GAS COLLECTION SYSTEM
C–05	PHASE I FINAL BUILDOUT GRADING PLAN
C–05A	PHASE I CLOSURE FINAL SITE PLAN
C–06	PHASE I CLOSURE COVER KEY SHEET
C–07	PLAN AND PROFILE PHASE I ACCESS ROAD
C–08	FULL BUILDOUT SECTIONS
C–09	PHASE I CLOSURE DETAILS
C–10	PHASE I CLOSURE DETAILS
C–10A	PHASE I CLOSURE DETAILS
C–11	PHASE I CLOSURE DETAILS
C–12	PHASE I CLOSURE DETAILS
C–12A	PHASE I CLOSURE DETAILS
C–13	PHASE I TEMPORARY FINAL COVER LAYOUT AND ANCHOR TRENCH PLAN
C–14	PHASE I TEMPORARY FINAL COVER ANCHOR TRENCH SECTIONS AND DETAILS
C–15	PHASE I TEMPORARY FINAL COVER ANCHOR TRENCH SECTIONS AND DETAILS
C–16	PHASE I TEMPORARY FINAL COVER ANCHOR TRENCH SECTIONS AND DETAILS
C–17	PHASE I TEMPORARY FINAL COVER CLOSURE DETAILS
C–18	PHASE I TEMPORARY FINAL COVER CLOSURE DETAILS
C–19	PHASE I TEMPORARY FINAL COVER CLOSURE DETAILS
C–20	PHASE I TEMPORARY FINAL COVER CLOSURE DETAILS
C–21	SEDIMENTATION AND EROSION CONTROL PLAN
C–22	SEDIMENTATION AND EROSION CONTROL DETAILS
LFG–01	LANDFILL GAS GENERAL NOTES
LFG–02	PHASE I GAS SYSTEM LAYOUT – EXISTING CONDITIONS
LFG–03	PHASE I SEQUENCE 2 GAS SYSTEM LAYOUT
LFG–04	EXTRACTION WELL DETAILS AND WELL SCHEDULE
LFG–05	WELLHEAD AND CONFIGURATION DETAILS
LFG–5A	WELLHEAD AND CONFIGURATION DETAILS
LFG–06	GENERAL LFG DETAILS
LFG–07	VALVE PIT DETAILS
LFG–08	GENERAL LFG DETAILS

CCSWDC BORROW FACILITY PHASE IV DRAWINGS

1	COVER SHEET
2	GENERAL NOTES
3	OVERALL SITE PLAN
4	SITE/DRAINAGE PLAN – BORROW AREA A
5	SITE/DRAINAGE PLAN – BORROW AREA B
6	SITE/DRAINAGE PLAN – BORROW AREA C
7	CROSS SECTIONS
8	EROSION AND SEDIMENT CONTROL

CCSWDC BORROW FACILITY PHASE V DRAWINGS

1	COVER SHEET
2	GENERAL NOTES
3	OVERALL SITE PLAN & KEY SHEET
4	SITE/DRAINAGE PLAN – BORROW AREA A
5	SITE/DRAINAGE PLAN – BORROW AREA B
6	SITE/DRAINAGE PLAN – BORROW AREA C
7	SITE/DRAINAGE PLAN – BORROW AREA D
8	CROSS SECTIONS
9	EROSION & SEDIMENT CONTROL

FLORIDA DEPARTMENT OF ENVIRONMENTAL PROTECTION
SEP 21 2011
SOUTHWEST DISTRICT TAMPA

SHEET
G-01

C:\pwworking\tpa\d0318297\G01.dwg, Plot, 9/20/2011 11:14:41 AM, BradJohn

ENGINEERING SYMBOLOGY

- EMBANKMENT SLOPE
- VEGETATION (SIZE)
- CO — CLEANOUT
- MH — MANHOLE
- MW — GROUNDWATER MONITORING WELL
- P — PIEZOMETER
- WATER SUPPLY WELL
- C-1/ P2-1 — LEACHATE MONITORING POINT
- STW — STORMWATER MONITORING STATION
- GP — GAS PROBE
- UV — UTILITY VAULT
- PP — POWER POLE
- TP — TELEPHONE POLE
- FH — FIRE HYDRANT
- YH-X — YARD HYDRANT
- X 75.5 — EXISTING SPOT ELEVATION
- 75.8 — FINISHED SPOT ELEVATION
- HORIZONTAL CONTROL POINT OR BENCHMARK
- DOWNGUY
- SWAMP OR WETLANDS
- B4-R — SURFACE WATER MONITORING STATION

NOTES:

1. UTILITIES THAT ARE SUSPENDED ABOVE GRADE ARE DESIGNATED BY THE PREFIX "OH" (OVERHEAD).

- ---T---- TELEPHONE LINE
- ---E---- ELECTRIC LINE
- PIPELINE
- DRAINAGE FLOW
- NATURAL WATERWAY
- —X—X— CHAIN LINK FENCE
- --X---X-- FIELD FENCE
- PROPERTY BOUNDARY
- CENTERLINE
- ---RB--- ROCK BERM
- SILT FENCE
- LIMITS OF CONSTRUCTION
- WATERWAY
- LIMITS OF EASEMENT
- EASEMENT CENTERLINE
- CONSTRUCTION TRAFFIC ROUTE
- EXISTING ROADWAY
- PHASE LIMITS
- ANCHOR TRENCH – TYPE 1
- ANCHOR TRENCH – TYPE 2
- ANCHOR TRENCH – TYPE 3

- 30 — EXISTING ELEVATION CONTOUR
- 30 — PROPOSED ELEVATION CONTOUR
- LIMITS OF PROPOSED LINER
- APPROXIMATE LIMITS OF EXISTING LINER
- ASPHALT (PLAN OR SMALL-SCALE SECTION)
- ASPHALT (LARGE-SCALE SECTION)
- PROTECTIVE COVER SOIL
- INITIAL COVER
- INTERMEDIATE COVER
- STRUCTURAL FILL
- CONCRETE (PLAN AND/OR SECTION)
- CONCRETE MASONRY (PLAN AND/OR SECTION)
- SOLID WASTE (SECTION)
- FABRIC-FORMED CONCRETE (PLAN)
- FABRIC-FORMED CONCRETE (SECTION)
- GRANULAR FILL (SECTION)
- GRATING (PLAN)
- GROUT (SECTION)
- PRECAST CONCRETE (PLAN AND/OR SECTION)
- RIPRAP OR RUBBLE (PLAN AND/OR SECTION)
- DRAINAGE STONE (SECTION)
- PROTECTIVE COVER DRAINAGE LAYER (SECTION)
- VEGETATIVE COVER (SECTION)
- SOD (SECTION)
- WOOD – CONTINUOUS (SECTION)
- WOOD BLOCKING (SECTION)
- DRAINAGE GEOCOMPOSITE (SECTION)
- GEOTEXTILE (SECTION)
- 20 MIL POLYETHYLENE RAIN COVER
- 40 MIL GEOMEMBRANE (LLDPE TEXTURED/SMOOTH)
- 60 MIL GEOMEMBRANE (HDPE TEXTURED)
- 60 MIL TPO
- LEACHATE FORCEMAIN

GENERAL SYMBOLOGY

ARROW INDICATES DIRECTION OF PLAN NORTH — N

PLAN
1/4" = 1'-0"
PLAN TITLE

SECTION LETTER
FLAG INDICATES DIRECTION OF SECTION CUT
X / XXX
SHEET WHERE SECTION IS LOCATED *
SECTION CUT MARKER

SECTION
3/8" = 1'-0"
SECTION LETTER
SHEET WHERE SECTION VIEW IS FIRST CUT *
SECTION TITLE

DETAIL NUMBER
/ XXX
SHEET WHERE DETAIL IS LOCATED *
DETAIL MARKER
FOR REFERENCING DETAILS INCLUDED IN DRAWING SET.

XXXXXXXXX
DETAIL MARKER
FOR REFERENCING DETAILS BOUND IN SPECIFICATIONS OR SEPARATE VOLUME.

DETAIL
3" = 1'-0"
DETAIL NUMBER
SHEET WHERE DETAIL WAS CALLED OUT
DETAIL TITLE

* FOR COMMON DETAILS AND SECTIONS OR DETAILS THAT ARE CUT OR CALLED OUT ON MULTIPLE SHEETS, THE SHEET NUMBER IS REPLACED BY A DASH (–).

ELEVATION NUMBER
ARROW INDICATES POINT OF VIEW
SHEET WHERE ELEVATION IS LOCATED *
SINGLE ELEVATION OR PHOTO MARKER

ELEVATION NUMBER
ARROW INDICATES POINT OF VIEW ELEVATION
INDICATES SHEET WHERE ELEVATION IS LOCATED
A B C D
MULTIPLE ELEVATION OR PHOTO MARKER

ELEVATION
3" = 1'-0"
ELEVATION IDENTIFICATION NUMBER
SHEET WHERE POINT OF VIEW MARKER CAN BE FOUND *
ELEVATION TITLE

ABBREVIATIONS

APPROX – APPROXIMATE, APPROXIMATELY
BLDG – BUILDING
BTM – BOTTOM
CB – CATCH BASIN
CM – CONCRETE MONUMENT
CMP – CORRUGATED METAL PIPE
CONC – CONCRETE
CONT – CONTINUOUS
CORR – CORRUGATED
DET – DETAIL
DIA – DIAMETER
DIM – DIMENSION
DWG – DRAWING
EA – EACH
EOL – EDGE OF LINER
ETC – ET CETERA
ENCL – ENCLOSE, ENCLOSURE
EL – ELEVATION
EQUIP – EQUIPMENT
EXIST – EXISTING
FDEP – FLORIDA DEPARTMENT OF ENVIRONMENTAL PROTECTION
FDOT – FLORIDA DEPARTMENT OF TRANSPORTATION
FES – FLARED END SECTION
FIN – FINISHED
FM – FORCE MAIN
GALV – GALVANIZED
GCL – GEOSYNTHETIC CLAY LINER
GFFR – GROUT FILLED FIBER REVETMENT
GR – GRADE
GDL – GEOSYNTHETIC DRAINAGE LINER
GM – GAS MONITORING LOCATION
GP – GAS PROBE
HDPE – HIGH DENSITY POLYETHYLENE
HP – HIGH POINT
ID – INSIDE DIAMETER
IE – INVERT ELEVATION
LF – LINEAL FEET
LFG – LANDFILL GAS
LLDPE – LINEAR LOW DENSITY POLYETHYLENE
LP – LOW POINT
MES – MITRED END SECTION
MAX – MAXIMUM
MFR – MANUFACTURER
MH – MANHOLE
MIN – MINIMUM
MISC – MISCELLANEOUS
MSL – (ABOVE) MEAN SEAL LEVEL
MT – MOUNT
MW – GROUNDWATER MONITORING WELL
N/A – NOT APPLICABLE
N/AVAIL – NOT AVAILABLE
NGVD – NATIONAL GEODETIC VERTICAL DATUM
NIC – NOT IN CONTRACT
No – NUMBER
NP – NONPERFORATED – PIEZOMETER
NTS – NOT TO SCALE
OC – ON CENTER
OD – OUTSIDE DIAMETER
OSHA – OCCUPATIONAL SAFETY & HEALTH ADMINISTRATION
P – PIEZOMETER
PLS – PROFESSIONAL LAND SURVEYOR
PS – PUMP STATION
R – RADIUS
RCP – REINFORCED CONCRETE PIPE
REF – REFERENCE
REQD – REQUIRED
SL-SLOPE
SCH – SCHEDULE
SDR – STANDARD DIMENSION RATIO
SHT – SHEET
SIM – SIMILAR
SS – STAINLESS STEEL
STD – STANDARD
STL – STEEL
STW – STORMWATER MONITORING STATION
TPO – THERMOPLASTIC POLYOLEFIN
TYP – TYPICAL
USC&GS – UNITED STATES COASTAL AND GEODETIC SURVEY
USGS – UNITED STATES GEOLOGICAL SURVEY
WGT – WEIGHT
W.E. – WATER ELEVATION
WWTP – WASTE WATER TREATMENT PLANT

GENERAL NOTES

1. THIS IS A STANDARD SHEET SHOWING COMMON SYMBOLOGY. ALL SYMBOLS ARE NOT NECESSARILY USED ON THIS PROJECT. REFER TO THE LEGEND PROVIDED ON EACH SHEET FOR SPECIFIC SHEET SYMBOLOGY.
2. SCREENING OR SHADING OF WORK IS USED TO INDICATE EXISTING COMPONENTS OR TO DE-EMPHASIZE PROPOSED IMPROVEMENTS TO HIGHLIGHT SELECTED TRADE WORK. REFER TO CONTEXT OF EACH SHEET FOR USAGE.
3. EXISTING TOPOGRAPHY WITHIN PHASES I THROUGH IV AREAS COMPILED BY KUCERA INTERNATIONAL INC. OF WILLOUGHBY, OHIO USING PHOTOGRAMMETRIC METHODS FROM AERIAL PHOTOGRAPHS DATED JUNE 2, 2010.
4. EXISTING TOPOGRAPHY WITHIN THE FUTURE USE AREAS COMPILED FROM THE CDM CONSTRUCTION PLANS DATED APRIL 1998 AND BY PBS&J LEACHATE FORCEMAIN AND PUMP STATION DRAWING SET DATED JULY 2005.
5. LOCATIONS OF EXISTING PIEZOMETERS, MONITORING WELLS AND STAFF GAUGES OBTAINED FROM SPECIFIC PURPOSE SURVEY BY SARASOTA COUNTY, MARCH 2008. VERIFY LOCATIONS IN FIELD.
6. EXISTING UNDERGROUND FACILITIES, STRUCTURES, AND UTILITIES HAVE BEEN LOCATED FROM THE BEST AVAILABLE SURVEY DATA AND RECORDS AND THEIR LOCATIONS MUST ONLY BE CONSIDERED AS APPROXIMATE. IT SHALL BE THE CONTRACTOR'S RESPONSIBILITY TO VERIFY THE EXACT LOCATION OF ALL EXISTING UTILITIES SHOWN ON THE PLANS AND ANY OTHER UTILITIES WHICH MAY NOT BE SHOWN ON THE PLANS. THE CONTRACTOR SHALL NOTIFY ALL UTILITY COMPANIES IN THE AREA AT LEAST 72 HOURS PRIOR TO BEGINNING CONSTRUCTION. CALL FLORIDA SUNSHINE STATE ONE CALL CENTER AT 811. ALL COORDINATION AND REQUIRED UTILITY COMPANY TEMPORARY PROTECTION SHALL BE AT THE CONTRACTOR'S EXPENSE. IT IS THE CONTRACTOR'S RESPONSIBILITY TO ENSURE NO INTERRUPTION OF SERVICE AND REPLACEMENT OF DAMAGED UTILITIES.
7. THE CONTRACTOR SHALL RESTORE TO THE OWNER'S SATISFACTION ALL AREAS DISTURBED BY CONSTRUCTION; INCLUDING PERIMETER ROADWAY SURFACES, ROADWAY SHOULDERS AND DITCHES, DRAINAGE STRUCTURES AND OTHER EXISTING FEATURES.
8. HORIZONTAL DATUM IS BASED ON THE FLORIDA STATE PLANE COORDINATE SYSTEM-WEST ZONE (NAD 83). VERTICAL DATUM IS BASED ON THE NATIONAL GEODETIC VERTICAL DATUM (NGVD 29).
9. THE CONTRACTOR SHALL OBTAIN ALL PERMITS AND APPROVALS PRIOR TO COMMENCING WORK.
10. THE CONTRACTOR SHALL BE RESPONSIBLE FOR MEETING ALL CONDITIONS AND REQUIREMENTS OF ALL PERMITS AND ALL GOVERNING FEDERAL, STATE, AND LOCAL AGENCIES.
11. THESE PLANS ACCOMPANY AND ARE PART OF THE TECHNICAL SPECIFICATIONS. WHEN THESE DRAWINGS AND/OR TECHNICAL SPECIFICATIONS LACK SPECIFICITY, CONSULT THE DESIGN ENGINEER (HDR ENGINEERING, INC.).
12. ANY CONFLICTS BETWEEN THESE PLANS AND THE SPECIFICATION SHOULD BE BROUGHT TO THE ATTENTION OF THE DESIGN ENGINEER (HDR ENGINEERING, INC.).
13. THE CONTRACTOR IS RESPONSIBLE FOR DEWATERING (IF REQUIRED) ALL EXCAVATIONS, FILL AREAS, ETC. IN ORDER TO WORK IN DRY CONDITIONS. REFER TO THE SPECIFICATIONS FOR ADDITIONAL INFORMATION.
14. ATTENTION IS DIRECTED TO THE FACT THAT AN ACTIVE LANDFILL AND OTHER FACILITIES WILL BE IN OPERATION DURING THE CONSTRUCTION PERIOD. WASTE HAULING TRUCKS WILL BE ACTIVE DURING NORMAL BUSINESS HOURS. THE CONTRACTOR SHALL NOT BLOCK WASTE HAULING OR OTHER LANDFILL ACTIVITIES WITHOUT PRIOR WRITTEN APPROVAL FROM THE OWNER. IF NECESSARY, CONTRACTOR SHALL PROVIDE TRAFFIC CONTROL TO MAINTAIN LANDFILL ACTIVITIES. THE CONTRACTOR IS ADVISED THAT SCALE RECORDS ARE AVAILABLE, UPON REQUEST FROM THE OWNER, WHICH INDICATE HISTORICAL DELIVERIES, BOTH DAILY AND HOURLY, OF WASTE TO THE LANDFILL.
15. THE CONTRACTOR IS SOLELY RESPONSIBLE FOR SITE SAFETY ASSOCIATED WITH THE WORK UNDER THIS CONTRACT AND FOR COMPLIANCE WITH ALL FEDERAL, STATE AND LOCAL HEALTH AND SAFETY LAWS, CODES, REGULATIONS AND ORDINANCES INCLUDING BUT NOT LIMITED TO THOSE MANDATED BY OSHA AND THE FLORIDA TRENCH SAFETY ACT. CONTRACTOR SHALL ALSO COORDINATE A SITE SAFETY PLAN WITH COUNTY PERSONNEL. THE CONTRACTOR SHALL INCLUDE IN THE TOTAL BID PRICE ALL COSTS FOR COMPLIANCE WITH THESE REGULATIONS.
16. THE CONTRACTOR IS RESPONSIBLE FOR DEVELOPING AND MAINTAINING A SITE AND PERSONNEL SAFETY PROGRAM TO ADDRESS MONITORING OF THE WORK WITHIN AND ADJACENT TO THE EXISTING LANDFILL. REFER TO TECHNICAL SPECIFICATIONS FOR ENVIRONMENTAL CONTROL PROGRAM REQUIREMENTS FOR FURTHER INFORMATION.
17. THE CONTRACTOR IS RESPONSIBLE FOR VERIFYING THE LOCATION AND ELEVATION OF ALL EXISTING BENCHMARKS. FURTHER, THE CONTRACTOR WILL NEED TO EMPLOY A LICENSED SURVEYOR FOR EXTENDING BOTH HORIZONTAL AND VERTICAL CONTROLS AS NECESSARY TO PERFORM THE WORK UNDER THIS CONTRACT.
18. THE CONTRACTOR SHALL BE RESPONSIBLE FOR ANY DAMAGE TO EXISTING FACILITIES, STRUCTURES, OR UTILITIES ABOVE OR BELOW GROUND, CAUSED BY CONSTRUCTION OPERATIONS WHICH HAVE BEEN PREVIOUSLY LOCATED BY THEIR RESPECTIVE OWNERS.
19. THE CONTRACTOR SHALL PROVIDE PROPER WARNING SIGNS, BARRICADES, TEMPORARY FENCING AND OTHER APPROPRIATE SAFETY DEVICES DURING THE EXECUTION OF THE WORK TO PROVIDE PUBLIC PROTECTION AND SAFETY.
20. THE CONTRACTOR SHALL PROVIDE ACCESS FOR TRAFFIC AT ALL TIMES DURING CONSTRUCTION.

SHEET NAMING CONVENTION

G	GENERAL
V	SURVEYING/MAPPING
X	DEMOLITION
C	CIVIL
U	MULTI-DISCIPLINE
S	STRUCTURAL
A	ARCHITECTURAL
D	PROCESS
M	MECHANICAL (HVAC)
P	PLUMBING
E	ELECTRICAL
Y	INSTRUMENTATION
LFG	LANDFILL GAS

FLORIDA DEPARTMENT OF ENVIRONMENTAL PROTECTION
SEP 21 2011
SOUTHWEST DISTRICT TAMPA

D C B A

HDR Engineering, Inc.
2621 Cattlemen Rd., Ste. 106
Sarasota, Fl 34232-6212
(941) 342-2700
CA00004213

ISSUE	DATE	DESCRIPTION
0	10/2011	ISSUED FOR CONSTRUCTION

PROJECT MANAGER	R. SIEMERING
REVIEWED BY	J. TIMMONS, R. SIEMERING
CIVIL DESIGN	C. RESTREPO, T. YANOSCHACK
DRAWN BY	B. JOHNSON
PROJECT NUMBER	00096-130530-005

THOMAS M. YANOSCHAK LICENSE No. 44200 STATE OF FLORIDA PROFESSIONAL ENGINEER
THOMAS M. YANOSCHAK, P. E.
CERTIFICATE NO. 44200

SARASOTA COUNTY

Central County Solid Waste Disposal Complex
PHASE I CLASS I LANDFILL CLOSURE AND LANDFILL GAS COLLECTION SYSTEM CONSTRUCTION DRAWINGS
FLORIDA

GENERAL NOTES LEGEND AND ABBREVIATIONS

0 1" 2"

FILENAME	00G-02.DWG
SCALE	AS SHOWN

SHEET **G-02**

c:\pwworking\tpa\d0318297\00G-02.dwg, Plot, 9/16/2011 10:52:20 AM, BradJohn

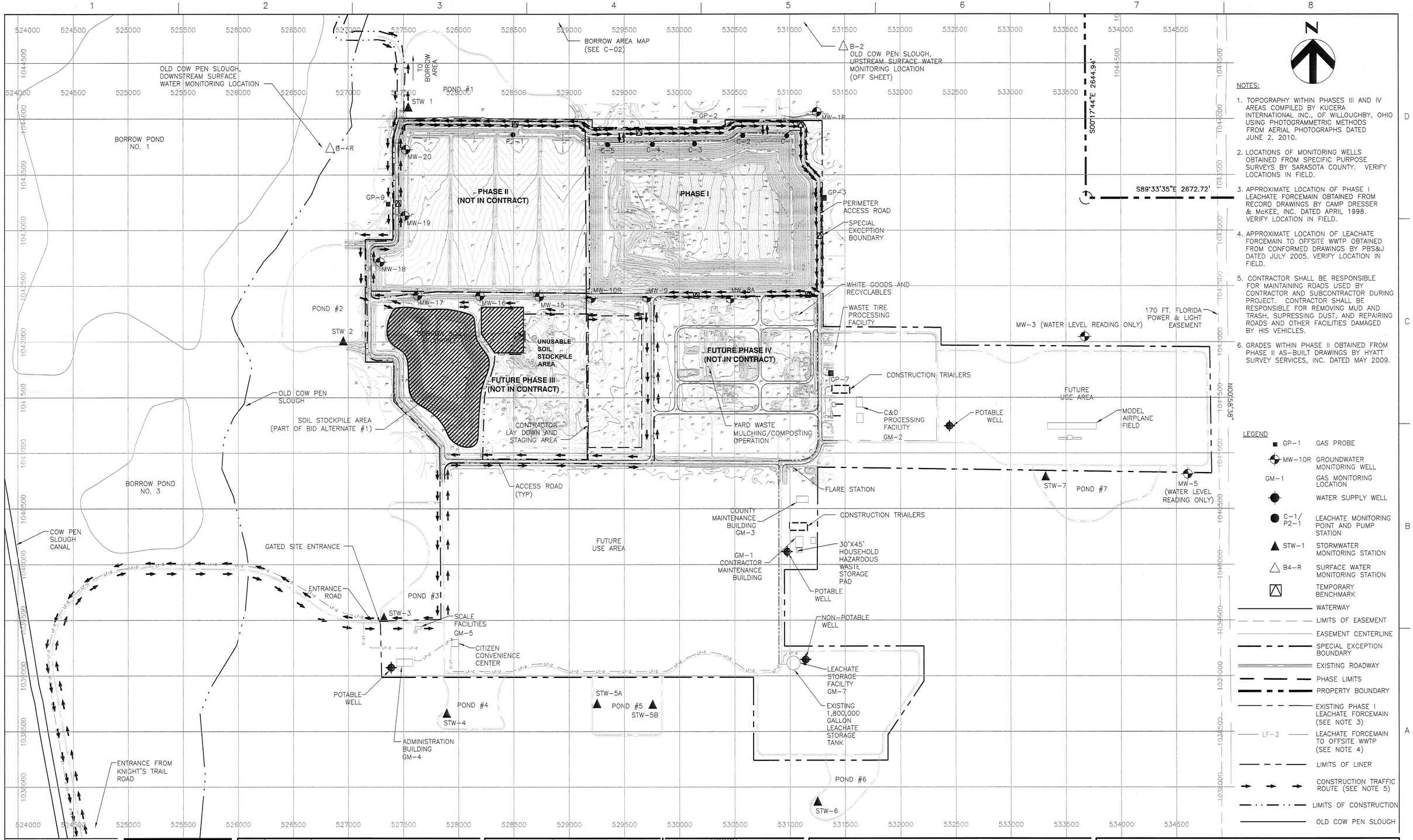

NOTES:

1. TOPOGRAPHY WITHIN PHASES III AND IV AREAS COMPILED BY KUCERA INTERNATIONAL INC., OF WILLOUGHBY, OHIO USING PHOTOGRAMMETRIC METHODS FROM AERIAL PHOTOGRAPHS DATED JUNE 2, 2010.
2. LOCATIONS OF MONITORING WELLS OBTAINED FROM SPECIFIC PURPOSE SURVEYS BY SARASOTA COUNTY. VERIFY LOCATIONS IN FIELD.
3. APPROXIMATE LOCATION OF PHASE I LEACHATE FORCEMAIN OBTAINED FROM RECORD DRAWINGS BY CAMP DRESSER & McKEE, INC. DATED APRIL 1998. VERIFY LOCATION IN FIELD.
4. APPROXIMATE LOCATION OF LEACHATE FORCEMAIN TO OFFSITE WWTP OBTAINED FROM CONFORMED DRAWINGS BY PBS&J DATED JULY 2005. VERIFY LOCATION IN FIELD.
5. CONTRACTOR SHALL BE RESPONSIBLE FOR MAINTAINING ROADS USED BY CONTRACTOR AND SUBCONTRACTOR DURING PROJECT. CONTRACTOR SHALL BE RESPONSIBLE FOR REMOVING MUD AND TRASH, SUPRESSING DUST, AND REPAIRING ROADS AND OTHER FACILITIES DAMAGED BY HIS VEHICLES.
6. GRADES WITHIN PHASE II OBTAINED FROM PHASE II AS-BUILT DRAWINGS BY HYATT SURVEY SERVICES, INC. DATED MAY 2009.

LEGEND

- GP-1 GAS PROBE
- MW-10R GROUNDWATER MONITORING WELL
- GM-1 GAS MONITORING LOCATION
- WATER SUPPLY WELL
- C-1/P2-1 LEACHATE MONITORING POINT AND PUMP STATION
- STW-1 STORMWATER MONITORING STATION
- B4-R SURFACE WATER MONITORING STATION
- TEMPORARY BENCHMARK
- WATERWAY
- LIMITS OF EASEMENT
- EASEMENT CENTERLINE
- SPECIAL EXCEPTION BOUNDARY
- EXISTING ROADWAY
- PHASE LIMITS
- PROPERTY BOUNDARY
- EXISTING PHASE I LEACHATE FORCEMAIN (SEE NOTE 3)
- LF-2 LEACHATE FORCEMAIN TO OFFSITE WWTP (SEE NOTE 4)
- LIMITS OF LINER
- CONSTRUCTION TRAFFIC ROUTE (SEE NOTE 5)
- LIMITS OF CONSTRUCTION
- OLD COW PEN SLOUGH

HDR Engineering, Inc.
2621 Cattlemen Rd., Ste. 106
Sarasota, Fl 34232-6212
(941) 342-2700
CA00004213

ISSUE	DATE	DESCRIPTION
0	10/2011	ISSUED FOR CONSTRUCTION

PROJECT MANAGER	R. SIEMERING
REVIEWED BY	J. TIMMONS, R. SIEMERING
CIVIL DESIGN	C. RESTREPO, T. YANOSCHACK
DRAWN BY	B. JOHNSON
PROJECT NUMBER	00096-130530-005

THOMAS M. YANOSCHAK, P. E.
CERTIFICATE NO. 44200

SARASOTA COUNTY

Central County Solid Waste Disposal Complex

PHASE I CLASS I LANDFILL CLOSURE AND LANDFILL GAS COLLECTION SYSTEM CONSTRUCTION DRAWINGS

SARASOTA COUNTY FLORIDA

OVERALL SITE PLAN

FLORIDA DEPARTMENT OF ENVIRONMENTAL PROTECTION
SEP 21 2011
SOUTHWEST DISTRICT TAMPA

0 1" 2"

FILENAME	00C-01.DWG
SCALE	1"=400'

SHEET C-01

c:\pwworkingdset\d0318297\00C-01.dwg, Plot, 9/16/2011 10:52:27 AM, Braddon

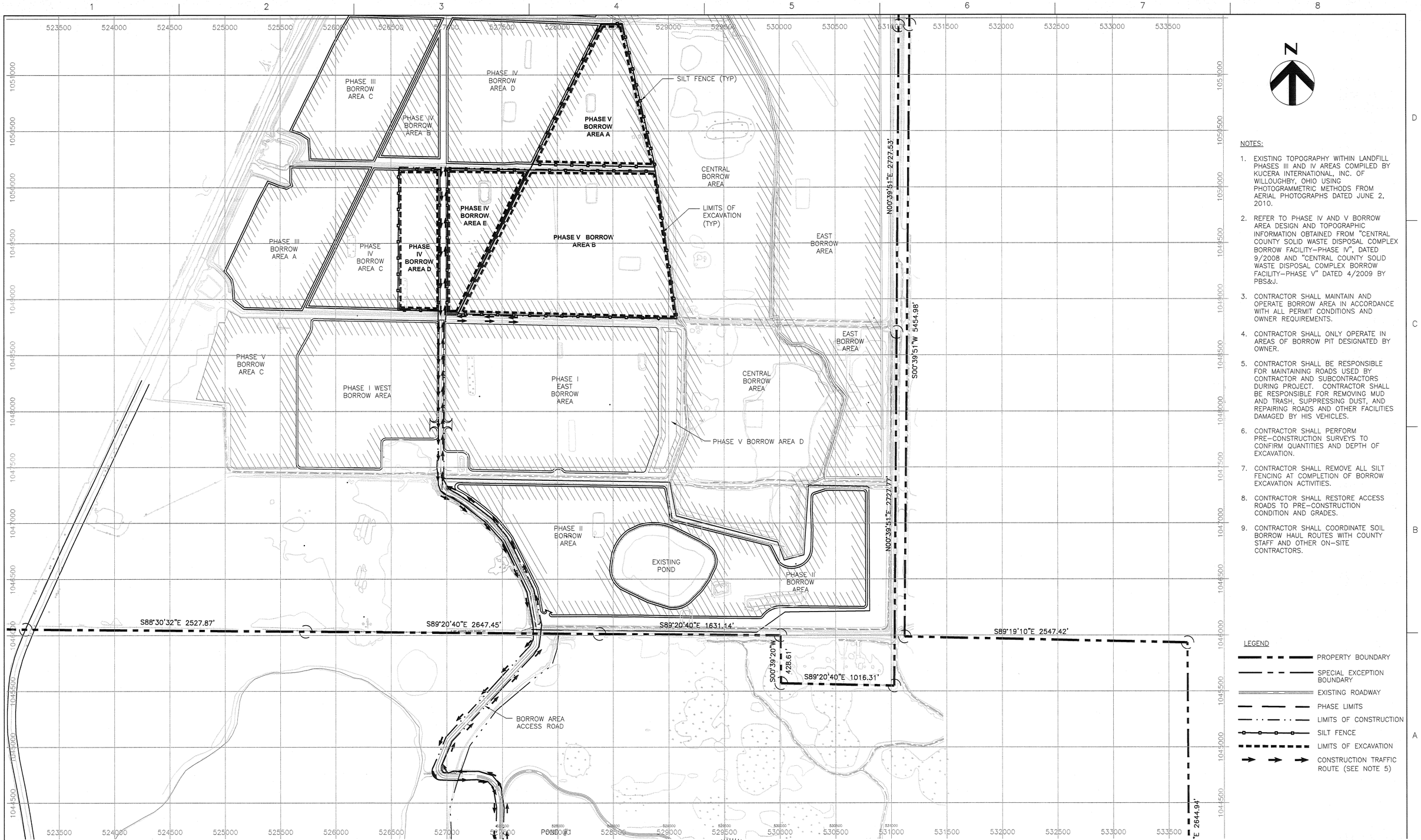

NOTES:

1. EXISTING TOPOGRAPHY WITHIN LANDFILL PHASES III AND IV AREAS COMPILED BY KUCERA INTERNATIONAL, INC. OF WILLOUGHBY, OHIO USING PHOTOGRAMMETRIC METHODS FROM AERIAL PHOTOGRAPHS DATED JUNE 2, 2010.
2. REFER TO PHASE IV AND V BORROW AREA DESIGN AND TOPOGRAPHIC INFORMATION OBTAINED FROM "CENTRAL COUNTY SOLID WASTE DISPOSAL COMPLEX BORROW FACILITY–PHASE IV", DATED 9/2008 AND "CENTRAL COUNTY SOLID WASTE DISPOSAL COMPLEX BORROW FACILITY–PHASE V" DATED 4/2009 BY PBS&J.
3. CONTRACTOR SHALL MAINTAIN AND OPERATE BORROW AREA IN ACCORDANCE WITH ALL PERMIT CONDITIONS AND OWNER REQUIREMENTS.
4. CONTRACTOR SHALL ONLY OPERATE IN AREAS OF BORROW PIT DESIGNATED BY OWNER.
5. CONTRACTOR SHALL BE RESPONSIBLE FOR MAINTAINING ROADS USED BY CONTRACTOR AND SUBCONTRACTORS DURING PROJECT. CONTRACTOR SHALL BE RESPONSIBLE FOR REMOVING MUD AND TRASH, SUPPRESSING DUST, AND REPAIRING ROADS AND OTHER FACILITIES DAMAGED BY HIS VEHICLES.
6. CONTRACTOR SHALL PERFORM PRE–CONSTRUCTION SURVEYS TO CONFIRM QUANTITIES AND DEPTH OF EXCAVATION.
7. CONTRACTOR SHALL REMOVE ALL SILT FENCING AT COMPLETION OF BORROW EXCAVATION ACTIVITIES.
8. CONTRACTOR SHALL RESTORE ACCESS ROADS TO PRE–CONSTRUCTION CONDITION AND GRADES.
9. CONTRACTOR SHALL COORDINATE SOIL BORROW HAUL ROUTES WITH COUNTY STAFF AND OTHER ON–SITE CONTRACTORS.

LEGEND

- PROPERTY BOUNDARY
- SPECIAL EXCEPTION BOUNDARY
- EXISTING ROADWAY
- PHASE LIMITS
- LIMITS OF CONSTRUCTION
- SILT FENCE
- LIMITS OF EXCAVATION
- CONSTRUCTION TRAFFIC ROUTE (SEE NOTE 5)

HDR Engineering, Inc.
2621 Cattlemen Rd., Ste. 106
Sarasota, Fl 34232-6212
(941) 342-2700
CA00004213

ISSUE	DATE	DESCRIPTION
0	10/2011	ISSUED FOR CONSTRUCTION

PROJECT MANAGER	R. SIEMERING
REVIEWED BY	J. TIMMONS, R. SIEMERING
CIVIL DESIGN	C. RESTREPO, T. YANOSCHACK
DRAWN BY	B. JOHNSON
PROJECT NUMBER	00096–130530–005

THOMAS M. YANOSCHAK, P. E.
CERTIFICATE NO. 44200

SARASOTA COUNTY

Central County Solid Waste Disposal Complex

PHASE I CLASS I LANDFILL CLOSURE AND LANDFILL GAS COLLECTION SYSTEM CONSTRUCTION DRAWINGS

SARASOTA COUNTY FLORIDA

FLORIDA DEPARTMENT OF ENVIRONMENTAL PROTECTION
SEP 21 2011
SOUTHWEST DISTRICT TAMPA

BORROW AREA MAP

0 1" 2"

FILENAME	00C–02.DWG
SCALE	1"=400'

SHEET C-02

c:\pwworking\tpab\d0318270\00C-02.dwg, Plot, 9/16/2011 10:52:37 AM, BradJohn

SHEET NOT USED

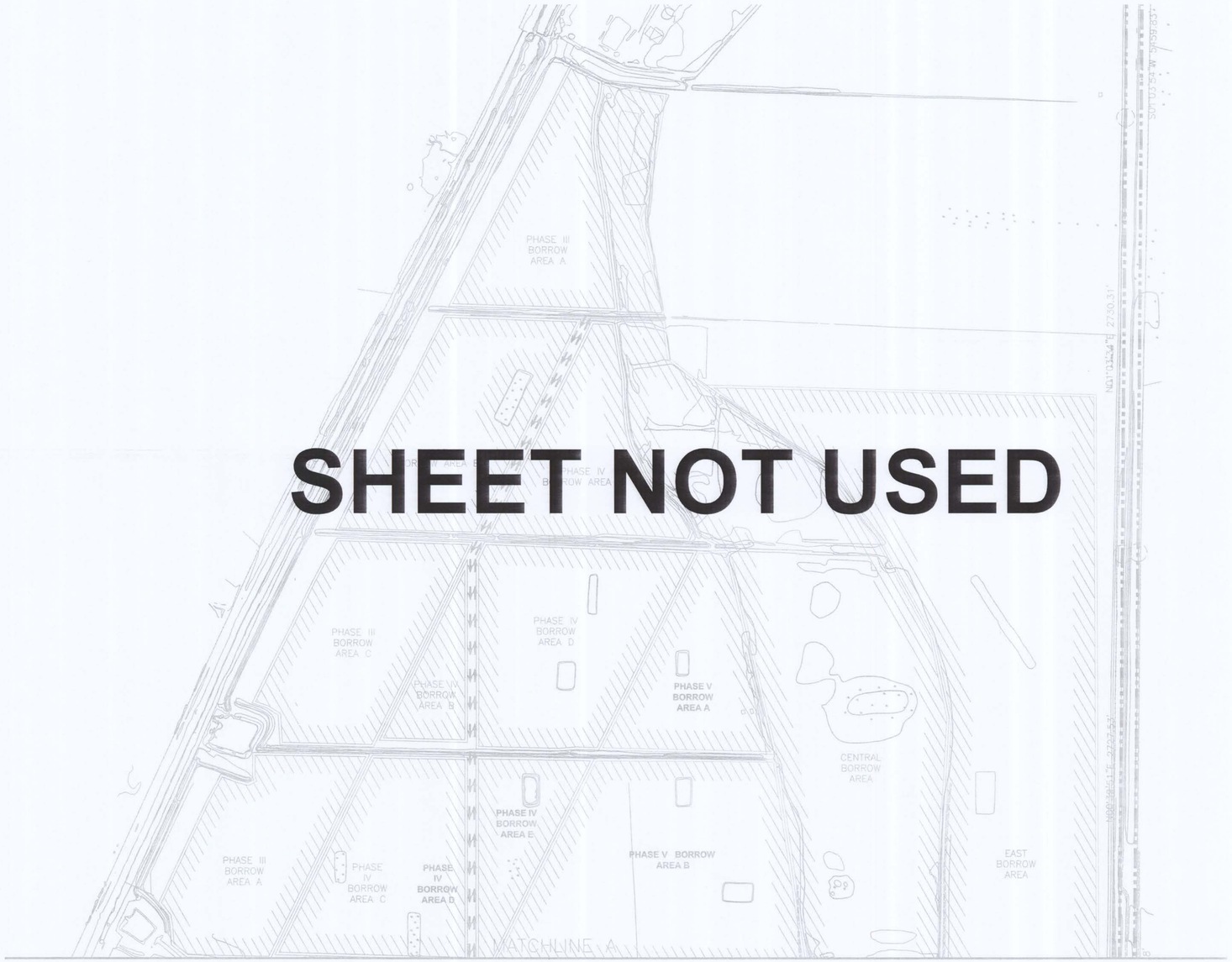

N

NOTES:

1. EXISTING TOPOGRAPHY WITHIN LANDFILL PHASES III AND IV AREAS COMPILED BY KUCERA INTERNATIONAL, INC. OF WILLOUGHBY, OHIO USING PHOTOGRAMMETRIC METHODS FROM AERIAL PHOTOGRAPHS DATED JUNE 1, 2009.
2. PHASE I AND II BORROW AREA DESIGN AND TOPOGRAPHIC INFORMATION OBTAINED FROM "CONSTRUCTION PLANS FOR CENTRAL COUNTY SOLID WASTE DISPOSAL CENTER ALBRITION BORROW FACILITY, PHASE 2" BY PBS&J, JULY 2006
3. PHASE III BORROW AREA DESIGN AND TOPOGRAPHIC INFORMATION OBTAINED FROM "CONSTRUCTION PLANS FOR CENTRAL COUNTY SOLID WASTE DISPOSAL COMPLEX BORROW FACILITY – PHASE III" BY PBS&J, OCTOBER 2007.
4. PHASE IV BORROW AREA DESIGN AND TOPOGRAPHIC INFORMATION OBTAINED FROM "CONSTRUCTION PLANS FOR CENTRAL COUNTY SOLID WASTE DISPOSAL COMPLEX BORROW FACILITY – PHASE IV" BY PBS&J, SEPTEMBER 2008.
5. CONTRACTOR SHALL MAINTAIN AND OPERATE BORROW AREA IN ACCORDANCE WITH ALL PERMIT CONDITIONS AND OWNER REQUIREMENTS.
6. CONTRACTOR SHALL ONLY OPERATE IN AREAS OF BORROW PIT DESIGNATED BY OWNER.
7. CONTRACTOR SHALL BE RESPONSIBLE FOR MAINTAINING ROADS USED BY CONTRACTOR AND SUBCONTRACTORS DURING PROJECT. CONTRACTOR SHALL BE RESPONSIBLE FOR REMOVING MUD AND TRASH, SUPRESSING DUST, AND REPAIRING ROADS AND OTHER FACILITIES DAMAGED BY HIS VEHICLES.

LEGEND

- PROPERTY BOUNDARY
- SPECIAL EXCEPTION BOUNDARY
- EXISTING ROADWAY
- PHASE LIMITS
- CONSTRUCTION TRAFFIC ROUTE (SEE NOTE 6)

FLORIDA DEPARTMENT OF ENVIRONMENTAL PROTECTION
SEP 21 2011
SOUTHWEST DISTRICT TAMPA

HDR
HDR Engineering, Inc.
2621 Cattlemen Rd., Ste. 106
Sarasota, Fl 34232-6212
(941) 342-2700
CA00004213

ISSUE	DATE	DESCRIPTION
0	10/2011	ISSUED FOR CONSTRUCTION

PROJECT MANAGER	R. SIEMERING
REVIEWED BY	J. TIMMONS, R. SIEMERING
CIVIL DESIGN	C. RESTREPO, T. YANOSCHACK
DRAWN BY	B. JOHNSON
PROJECT NUMBER	00096-130530-005

THOMAS M. YANOSCHAK, P. E.
CERTIFICATE NO. 44200

SARASOTA COUNTY

Central County Solid Waste Disposal Complex

PHASE I CLASS I LANDFILL CLOSURE AND LANDFILL GAS COLLECTION SYSTEM CONSTRUCTION DRAWINGS

SARASOTA COUNTY FLORIDA

BORROW AREA MAP (2 OF 2)

0 1" 2"

FILENAME	00C-03.DWG
SCALE	1"=400'

SHEET C-03

c:\pwworking\tpad\d0118297000-03.dwg, Plot, 9/19/2011 09:52:46 AM, BradJohn

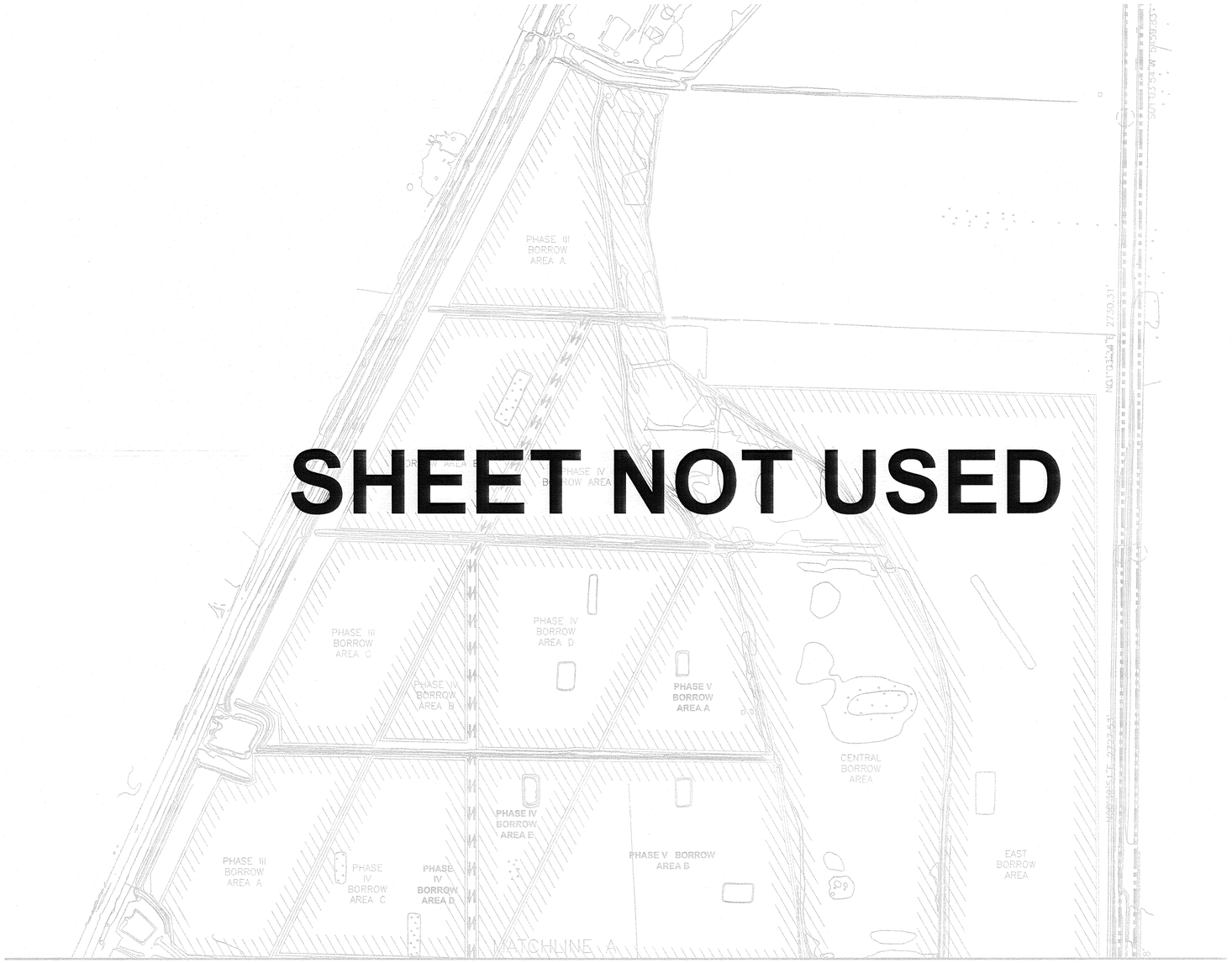

SHEET NOT USED

N

NOTES:

1. EXISTING TOPOGRAPHY WITHIN LANDFILL PHASES III AND IV AREAS COMPILED BY KUCERA INTERNATIONAL, INC. OF WILLOUGHBY, OHIO USING PHOTOGRAMMETRIC METHODS FROM AERIAL PHOTOGRAPHS DATED JUNE 1, 2009.
2. PHASE I AND II BORROW AREA DESIGN AND TOPOGRAPHIC INFORMATION OBTAINED FROM "CONSTRUCTION PLANS FOR CENTRAL COUNTY SOLID WASTE DISPOSAL CENTER ALBRITION BORROW FACILITY, PHASE 2" BY PBS&J, JULY 2006
3. PHASE III BORROW AREA DESIGN AND TOPOGRAPHIC INFORMATION OBTAINED FROM "CONSTRUCTION PLANS FOR CENTRAL COUNTY SOLID WASTE DISPOSAL COMPLEX BORROW FACILITY – PHASE III" BY PBS&J, OCTOBER 2007.
4. PHASE IV BORROW AREA DESIGN AND TOPOGRAPHIC INFORMATION OBTAINED FROM "CONSTRUCTION PLANS FOR CENTRAL COUNTY SOLID WASTE DISPOSAL COMPLEX BORROW FACILITY – PHASE IV" BY PBS&J, SEPTEMBER 2008.
5. CONTRACTOR SHALL MAINTAIN AND OPERATE BORROW AREA IN ACCORDANCE WITH ALL PERMIT CONDITIONS AND OWNER REQUIREMENTS.
6. CONTRACTOR SHALL ONLY OPERATE IN AREAS OF BORROW PIT DESIGNATED BY OWNER.
7. CONTRACTOR SHALL BE RESPONSIBLE FOR MAINTAINING ROADS USED BY CONTRACTOR AND SUBCONTRACTORS DURING PROJECT. CONTRACTOR SHALL BE RESPONSIBLE FOR REMOVING MUD AND TRASH, SUPRESSING DUST, AND REPAIRING ROADS AND OTHER FACILITIES DAMAGED BY HIS VEHICLES.

LEGEND

- PROPERTY BOUNDARY
- SPECIAL EXCEPTION BOUNDARY
- EXISTING ROADWAY
- PHASE LIMITS
- CONSTRUCTION TRAFFIC ROUTE (SEE NOTE 6)

FLORIDA DEPARTMENT OF ENVIRONMENTAL PROTECTION
SEP 21 2011
SOUTHWEST DISTRICT TAMPA

HDR

HDR Engineering, Inc.
2621 Cattlemen Rd., Ste. 106
Sarasota, Fl 34232-6212
(941) 342-2700
CA00004213

ISSUE	DATE	DESCRIPTION
0	10/2011	ISSUED FOR CONSTRUCTION

PROJECT MANAGER	R. SIEMERING
REVIEWED BY	J. TIMMONS, R. SIEMERING
CIVIL DESIGN	C. RESTREPO, T. YANOSCHACK
DRAWN BY	B. JOHNSON
PROJECT NUMBER	00096-130530-005

THOMAS M. YANOSCHAK, P. E.
CERTIFICATE NO. 44200

SARASOTA COUNTY

Central County Solid Waste Disposal Complex
PHASE I CLASS I LANDFILL CLOSURE AND LANDFILL GAS COLLECTION SYSTEM CONSTRUCTION DRAWINGS

SARASOTA COUNTY FLORIDA

BORROW AREA MAP (2 OF 2)

0 1" 2"

FILENAME	00C-03.DWG
SCALE	1"=400'

SHEET C-03

c:\pwworking\gis\d0318297\00C-03.dwg, Plot, 9/16/2011 10:52:46 AM, Brad.John

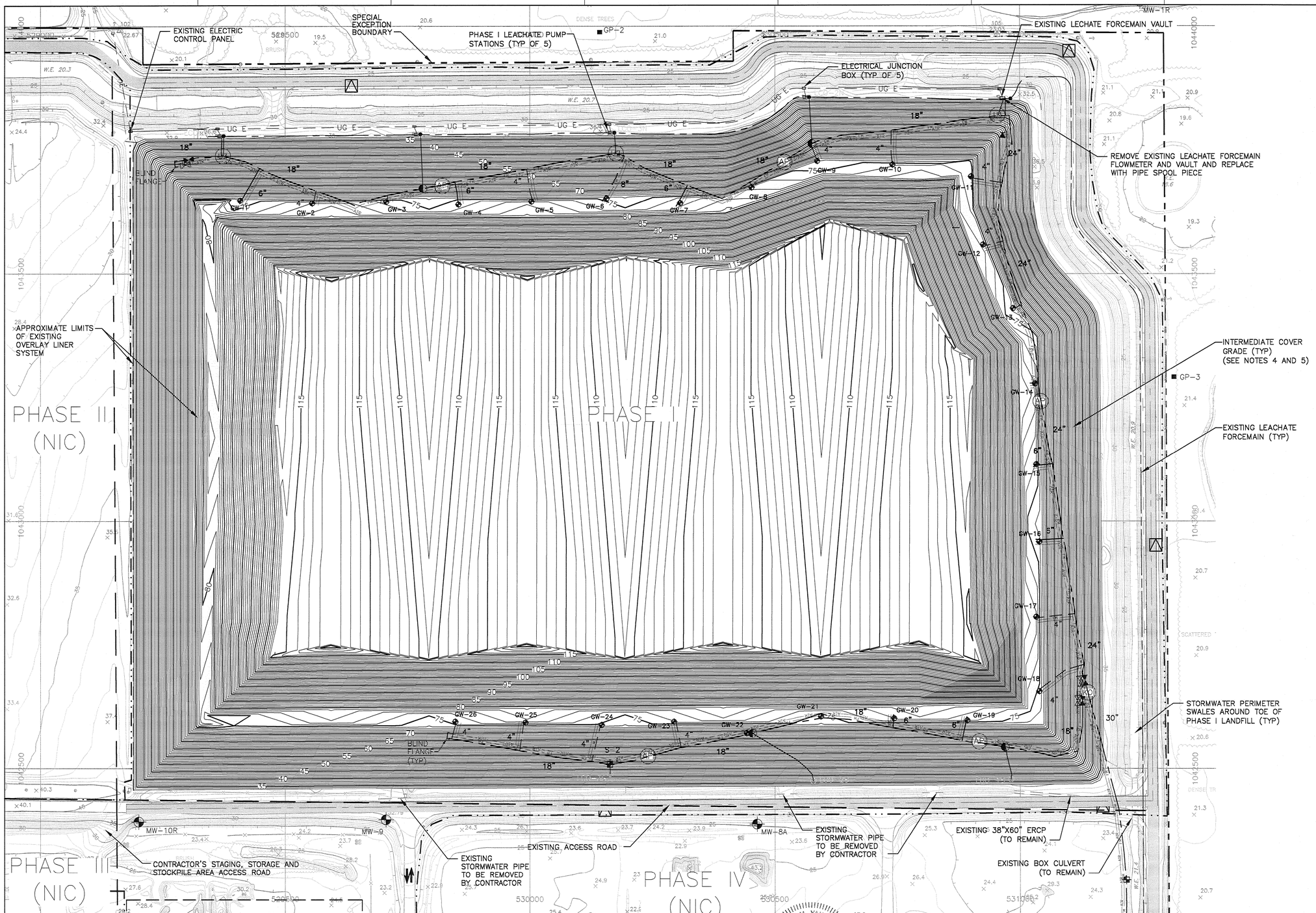

N

NOTES:

1. TOPOGRAPHY WITHIN PHASES I, III, AND IV AREAS COMPILED BY KUCERA INTERNATIONAL INC., OF WILLOUGHBY, OHIO USING PHOTOGRAMMETRIC METHODS FROM AERIAL PHOTOGRAPHS DATED JUNE 2, 2010.
2. LOCATIONS OF MONITORING WELLS OBTAINED FROM SPECIFIC PURPOSE SURVEYS BY SARASOTA COUNTY. VERIFY LOCATIONS IN THE FIELD.
3. APPROXIMATE LOCATION OF PHASE I LEACHATE FORCEMAIN OBTAINED FROM RECORD DRAWINGS BY CAMP DRESSER & McKEE, INC. DATED APRIL 1998. VERIFY LOCATION IN FIELD.
4. PHASE I GRADES REPRESENT MAXIMUM PROPOSED GRADES AT TIME OF CLOSURE. ACTUAL GRADES AT TIME OF CLOSURE CONSTRUCTION WILL NOT EXCEED THE ELEVATIONS SHOWN.
5. CONTRACTOR SHALL CUT/FILL EXISTING GRADES TO ACHIEVE INTERMEDIATE COVER GRADES AS SHOWN ON THIS SHEET.
6. CONTRACTOR TO REMOVE EXISTING BOLLARDS AND STOCKPILE FOR REUSE AS DIRECTED BY OWNER AND ENGINEER.
7. LOCATIONS OF EXISTING GAS COLLECTION SYSTEM OBTAINED FROM SURVEY BY HYATT SURVEY SERVICES, INC. DATED AUGUST 2, 2010. VERIFY LOCATIONS IN FIELD.

LEGEND

- GP-1 GAS PROBE
- MW-10R GROUNDWATER MONITORING WELL
- GM-1 GAS MONITORING LOCATION
- WATER SUPPLY WELL
- STW-1 STORMWATER MONITORING STATION
- B4-R SURFACE WATER MONITORING STATION
- LEACHATE PUMP STATION
- TEMPORARY BENCH MARK
- WATERWAY
- LIMITS OF EASEMENT
- EASEMENT CENTERLINE
- SPECIAL EXCEPTION BOUNDARY
- EXISTING ROADWAY
- PHASE BOUNDARY
- CHAIN LINK FENCE
- APPROX. LOCATION OF PHASE I LEACHATE FORCEMAIN (SEE NOTE 3)
- OHE OVERHEAD ELECTIC LINE
- UG E UNDERGROUND ELECTRIC LINE
- GW-60 EXISTING LFG WELLS
- AIR FM EXISTING LFG PIPE

FLORIDA DEPARTMENT OF ENVIRONMENTAL PROTECTION
SEP 21 2011
SOUTHWEST DISTRICT TAMPA

HDR

HDR Engineering, Inc.
2621 Cattlemen Rd., Ste. 106
Sarasota, Fl 34232-6212
(941) 342-2700
CA00004213

ISSUE	DATE	DESCRIPTION
0	10/2011	ISSUED FOR CONSTRUCTION

PROJECT MANAGER	R. SIEMERING
REVIEWED BY	J. TIMMONS, R. SIEMERING
CIVIL DESIGN	C. RESTREPO, T. YANOSCHACK
DRAWN BY	B. JOHNSON
PROJECT NUMBER	00096-130530-005

THOMAS M. YANOSCHAK LICENSE No. 44200 STATE OF FLORIDA PROFESSIONAL ENGINEER
9/18/11
THOMAS M. YANOSCHAK, P. E.
CERTIFICATE NO. 44200

SARASOTA COUNTY

Central County Solid Waste Disposal Complex
PHASE I CLASS I LANDFILL CLOSURE AND LANDFILL GAS COLLECTION SYSTEM CONSTRUCTION DRAWINGS

SARASOTA COUNTY FLORIDA

INTERMEDIATE COVER GRADES AND EXISTING GAS COLLECTION SYSTEM

0 1" 2"

FILENAME	00C-04.DWG
SCALE	1"=100'

SHEET C-04

c:\owworking\tpa\d0318297\00C-04.dwg, Plot, 9/16/2011 10:53:02 AM, BradJohn

POND #1

PHASE II (NIC)

PHASE III (NIC)

PHASE IV (NIC)

CELL I

PHASE I

ENERGY DISSIPATOR NORTH SLOPE (TYP) 3 C-11

STORMWATER DOWNDRAIN PIPE (TYP)

MEET AND MATCH EXISTING PAVEMENT (TYP)

EXISTING LEACHATE PUMP STATION (TYP) 1 C-12A

PROPOSED LEACHATE PUMP STATION (TYP) 2 C-12A

DOWNDRAIN TRENCH (TYP) 5 C-12

PROPOSED LEACHATE PUMP STATION ACCESS ROAD

FINAL COVER TIE IN (TYP) 2 C-11

FDOT NO. 4 STONE (TYP)

PROPOSED OUTER SIDESLOPE CONTOURS REPRESENT TOP OF FINAL COVER (TYP.)

EXISTING PHASE I/II OVERLAY LINER

TRANSITION FINAL COVER (SIDESLOPE) TO PHASE I/II OVERLAY LINER SYSTEM 3 C-10

TRANSITION FINAL COVER (SIDESLOPE) TO PHASE I/II OVERLAY LINER SYSTEM 3 C-10A

PROPOSED PHASE I/II OVERLAY LINER SYSTEM 3 C-12

SLOPE TO DRAIN

A C-08

NEW PHASE I/II OVERLAY LINER

EXISTING OVERLAY LINER TO NEW OVERLAY LINER TIE-IN 5 C-10A

LIMITS OF EXISTING PHASE I/II OVERLAY LINER SYSTEM

TRANSITION PHASE I/II OVERLAY LINER TO TEMPORARY FINAL COVER 3 C-17

6 C-12 DOWNDRAIN TRENCH (TYP) SOUTH SLOPE

1 C-10A STORMWATER DOWNDRAIN DISCHARGE AT ROAD CROSSING (TYP OF 2)

REGRADE SOUTH SWALE AS REQUIRED AND REMOVE EXISTING CROSSINGS AND STORMWATER PIPE

CONTRACTOR STAGING, STORAGE AND STOCKPILE AREA ACCESS ROAD

EXISTING PAVED ACCESS ROAD

24" MES (IE 25.00) EL 25.00

1 C-09 DOWNDRAIN AT TOP OF LANDFILL (TYP)

2 C-09 TERRACE/DOWNDRAIN INTERSECTION (TYP)

TRANSITION FINAL COVER (TOPSLOPE) TO PHASE I/II OVERLAY LINER SYSTEM 4 C-10

BERM ON TOP OF LANDFILL (TYP) 1 C-10

FINAL COVER PROFILE (TYP) 2 C-12

FINAL COVER PROFILE (TYP) 2 C-12

RIDGE EL. 121

TERRACE/DOWNDRAIN INTERSECTION SOUTH SLOPE 1 C-18

ACCESS ROAD 2 C-07

LIMITS OF TPO

TRANSITION FINAL COVER (TOPSLOPE) TO TEMPORARY FINAL COVER 2 C-17

TPO CONNECTION TO DITCH BOTTOM INLET 4 C-10A

TYPE J DITCH BOTTOM INLET WITH GRATE EL= 30.00

24" RCP (IE (N) 25.50, IE (S) 24.30)

36" RCP

MW-8A

CW-8A

EXISTING MONITORING WELLS (TO BE EXTENDED)

36" MES EL 23.84

36" MES EL 23.60

24" MES EL 23.20

24" MES (IE 23.60)

36" MES EL 22.95

36" RCP

EL 31.50

EL 31.30

EL 30.90

EL 30.50

EL 30.10

EL 29.70

LP EL. 107

LP EL. 113

LP EL. 114

LP EL. 116

LP EL. 111

2% (MIN)

2% (TYP)

3:1 (TYP)

2.1 (TYP)

0.5% TYP.

5% (TYP.)

TYPICAL DRAINAGE TERRACE 2 C-10

APPROXIMATE LOCATION OF EXISTING LEACHATE FORCEMAIN (TYP)

TOE DRAIN TIE-IN TO 24" DOWNDRAIN 7 C-12

8" DIA. ADS N-12 PERFORATED TOE DRAIN

ENERGY DISSIPATOR (TYP) EAST SLOPE 1 C-11

SCATTERED TREES AND BRUSH

TRANSITION FINAL COVER (SIDESLOPE) TO TEMPORARY FINAL COVER 1 C-17

FABRIC FORMED CONCRETE LINING OR FDOT DITCH LINING (RIP RAP)

EXISTING 38"X60" ERCP (TO REMAIN)

EXISTING BOX CULVERT (TO REMAIN)

MATCH EXISTING (EL 21.40)

FDOT DITCH LINING (RIP RAP)

EXISTING STORMWATER PERIMETER SWALES

LIMITS OF CONSTRUCTION

N

NOTES:

1. TOPOGRAPHY WITHIN PHASES III AND IV AREAS COMPILED BY KUCERA INTERNATIONAL INC., OF WILLOUGHBY, OHIO USING PHOTOGRAMMETRIC METHODS FROM AERIAL PHOTOGRAPHS DATED JUNE 2, 2010.
2. CONTOURS WITHIN PHASE I CLOSURE AREA REPRESENT PROPOSED TOP OF FINAL COVER.
3. OPERATIONAL AND FINAL WASTE GRADES SHALL NOT BE GREATER THAN 3:1.
4. APPROXIMATE LOCATION OF PHASE I LEACHATE FORCEMAIN OBTAINED FROM RECORD DRAWINGS BY CAMP DRESSER & McKEE, INC. DATED APRIL 1998. VERIFY LOCATION IN FIELD.
5. CONTRACTOR SHALL BE RESPONSIBLE FOR MAINTAINING ROADS USED BY CONTRACTOR AND SUBCONTRACTORS DURING PROJECT. CONTRACTOR SHALL BE RESPONSIBLE FOR REMOVING MUD AND TRASH, SUPPRESSING DUST, AND REPAIRING ROADS AND OTHER FACILITIES DAMAGED BY HIS VEHICLES.
6. LFG WELLS NOT SHOWN FOR CLARITY.

LEGEND

- EXISTING CONTOUR
- PROPOSED ELEVATION
- SPECIAL BOUNDARY
- EXISTING ROADWAY
- LIMITS OF CONSTRUCTION
- APPROX. LOCATION OF PHASE I LEACHATE FORCEMAIN (SEE NOTE 4)
- TOE DRAIN
- LP LOW POINT
- HP HIGH POINT
- TERRACE/DOWNDRAIN INTERSECTION
- PHASE I LEACHATE PUMP STATIONS
- CONSTRUCTION TRAFFIC ROUTE (SEE NOTE 5)
- STORMWATER FLOW DIRECTION
- FABRIC FORMED CONCRETE LINING
- VAULT BOX
- LEACHATE PUMP STATION STABILIZED ACCESS ROAD

FLORIDA DEPARTMENT OF ENVIRONMENTAL PROTECTION
SEP 21 2011
SOUTHWEST DISTRICT TAMPA

HDR

HDR Engineering, Inc.
2621 Cattlemen Rd., Ste. 106
Sarasota, Fl 34232-6212
(941) 342-2700
CA00004213

ISSUE	DATE	DESCRIPTION
0	10/2011	ISSUED FOR CONSTRUCTION

PROJECT MANAGER	R. SIEMERING
REVIEWED BY	J. TIMMONS, R. SIEMERING
CIVIL DESIGN	C. RESTREPO, T. YANOSCHACK
DRAWN BY	B. JOHNSON
PROJECT NUMBER	00096-130530-005

THOMAS M. YANOSCHAK LICENSE No. 44200 STATE OF FLORIDA PROFESSIONAL ENGINEER

THOMAS M. YANOSCHAK, P. E.
CERTIFICATE NO. 44200

SARASOTA COUNTY

Central County Solid Waste Disposal Complex

PHASE I CLASS I LANDFILL CLOSURE AND LANDFILL GAS COLLECTION SYSTEM CONSTRUCTION DRAWINGS

SARASOTA COUNTY FLORIDA

PHASE I FINAL BUILDOUT GRADING PLAN

0 1" 2"

FILENAME	00C-05.DWG
SCALE	1"=100'

SHEET C-05

c:\pwworking\tpa\d0313029\00C-05.dwg, Plot, 9/16/2011 10:53:46 AM, BradJohn

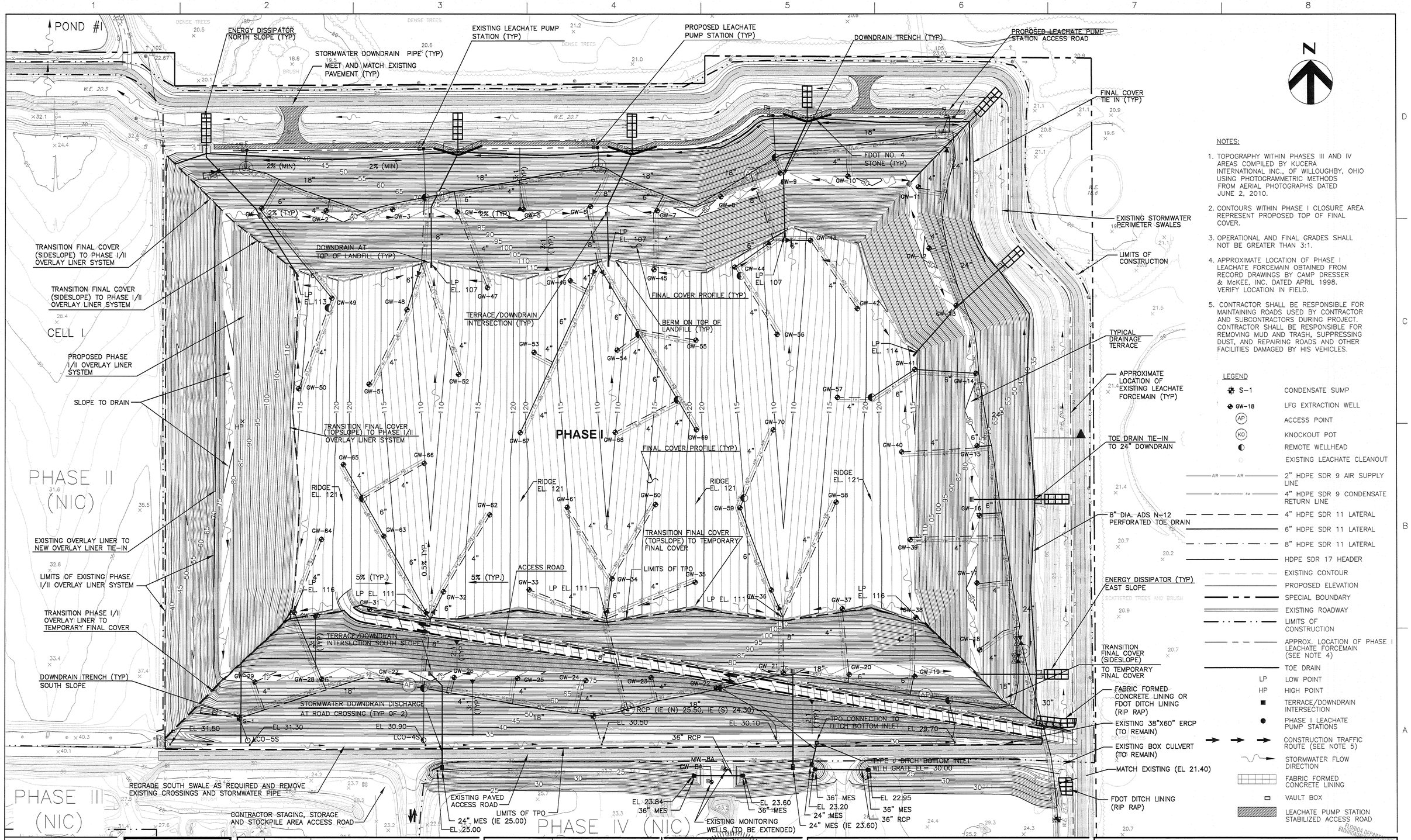

NOTES:

1. TOPOGRAPHY WITHIN PHASES III AND IV AREAS COMPILED BY KUCERA INTERNATIONAL INC., OF WILLOUGHBY, OHIO USING PHOTOGRAMMETRIC METHODS FROM AERIAL PHOTOGRAPHS DATED JUNE 2, 2010.
2. CONTOURS WITHIN PHASE I CLOSURE AREA REPRESENT PROPOSED TOP OF FINAL COVER.
3. OPERATIONAL AND FINAL GRADES SHALL NOT BE GREATER THAN 3:1.
4. APPROXIMATE LOCATION OF PHASE I LEACHATE FORCEMAIN OBTAINED FROM RECORD DRAWINGS BY CAMP DRESSER & McKEE, INC. DATED APRIL 1998. VERIFY LOCATION IN FIELD.
5. CONTRACTOR SHALL BE RESPONSIBLE FOR MAINTAINING ROADS USED BY CONTRACTOR AND SUBCONTRACTORS DURING PROJECT. CONTRACTOR SHALL BE RESPONSIBLE FOR REMOVING MUD AND TRASH, SUPPRESSING DUST, AND REPAIRING ROADS AND OTHER FACILITIES DAMAGED BY HIS VEHICLES.

LEGEND

S-1	CONDENSATE SUMP
GW-18	LFG EXTRACTION WELL
AP	ACCESS POINT
KO	KNOCKOUT POT
	REMOTE WELLHEAD
	EXISTING LEACHATE CLEANOUT
AIR AIR	2" HDPE SDR 9 AIR SUPPLY LINE
FM FM	4" HDPE SDR 9 CONDENSATE RETURN LINE
	4" HDPE SDR 11 LATERAL
	6" HDPE SDR 11 LATERAL
	8" HDPE SDR 11 LATERAL
	HDPE SDR 17 HEADER
	EXISTING CONTOUR
	PROPOSED ELEVATION
	SPECIAL BOUNDARY
	EXISTING ROADWAY
	LIMITS OF CONSTRUCTION
	APPROX. LOCATION OF PHASE I LEACHATE FORCEMAIN (SEE NOTE 4)
	TOE DRAIN
LP	LOW POINT
HP	HIGH POINT
	TERRACE/DOWNDRAIN INTERSECTION
	PHASE I LEACHATE PUMP STATIONS
	CONSTRUCTION TRAFFIC ROUTE (SEE NOTE 5)
	STORMWATER FLOW DIRECTION
	FABRIC FORMED CONCRETE LINING
	VAULT BOX
	LEACHATE PUMP STATION STABILIZED ACCESS ROAD

HDR

HDR Engineering, Inc.
2621 Cattlemen Rd., Ste. 106
Sarasota, Fl 34232-6212
(941) 342-2700
CA00004213

ISSUE	DATE	DESCRIPTION
0	10/2011	ISSUED FOR CONSTRUCTION

PROJECT MANAGER	R. SIEMERING
REVIEWED BY	J. TIMMONS, R. SIEMERING
CIVIL DESIGN	C. RESTREPO, T. YANOSCHACK
DRAWN BY	B. JOHNSON
PROJECT NUMBER	00096-130530-005

THOMAS M. YANOSCHAK, P. E.
CERTIFICATE NO. 44200

SARASOTA COUNTY

Central County Solid Waste Disposal Complex

PHASE I CLASS I LANDFILL CLOSURE AND LANDFILL GAS COLLECTION SYSTEM CONSTRUCTION DRAWINGS

SARASOTA COUNTY FLORIDA

FLORIDA DEPARTMENT OF ENVIRONMENTAL PROTECTION
SEP 21 2011
SOUTHWEST DISTRICT
TAMPA

PHASE I CLOSURE FINAL SITE PLAN

0 1" 2"

FILENAME	00C-05A.DWG
SCALE	1"=100'
SHEET	C-05A

c:\pwworking\tpa\d0315297000c-05A.dwg, Plot, 9/19/2011 10:54:08 AM, BradJonn

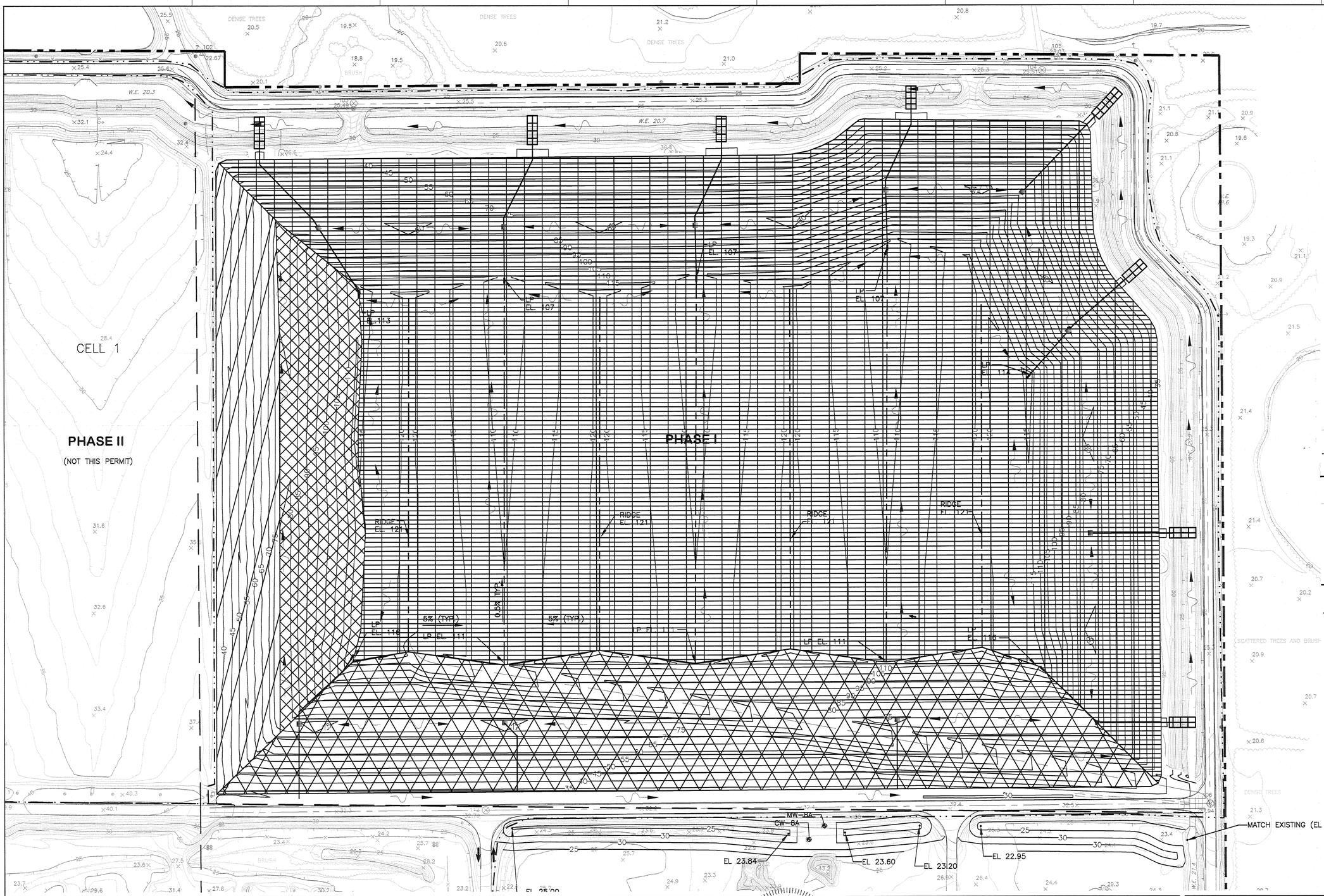

NOTES:

1. TOPOGRAPHY WITHIN PHASES III AND IV AREAS COMPILED BY KUCERA INTERNATIONAL INC., OF WILLOUGHBY, OHIO USING PHOTOGRAMMETRIC METHODS FROM AERIAL PHOTOGRAPHS DATED JUNE 1, 2009.
2. CONTOURS WITHIN PHASE I CLOSURE AREA REPRESENT PROPOSED TOP OF FINAL COVER.
3. OPERATIONAL AND FINAL GRADES SHALL NOT BE GREATER THAN 3:1.
4. CONTRACTOR SHALL BE RESPONSIBLE FOR MAINTAINING ROADS USED BY CONTRACTOR AND SUBCONTRACTOR DURING PROJECT. CONTRACTOR SHALL BE RESPONSIBLE FOR REMOVING MUD AND TRASH, SUPPRESSING DUST, AND REPAIRING ROADS AND OTHER FACILITIES DAMAGED BY HIS VEHICLES.

LEGEND

- EXISTING CONTOUR
- PROPOSED ELEVATION
- SPECIAL EXCEPTION BOUNDARY
- APPROX. LIMITS OF EXISTING LINER
- STORMWATER FLOW DIRECTION
- FABRIC-FORMED CONCRETE APRON
- LIMITS OF CONSTRUCTION
- PHASE LIMITS
- LP LOW POINT
- TERRACE/DOWNDRAIN INTERSECTION
- CONSTRUCTION TRAFFIC ROUTE (SEE NOTE 4)
- EXISTING PHASE I/II OVERLAY LINER
- TEMPORARY FINAL COVER
- FINAL CLOSURE COVER
- NEW PHASE I/II OVERLAY LINER

FLORIDA DEPARTMENT OF ENVIRONMENTAL PROTECTION
SEP 21 2011
SOUTHWEST DISTRICT TAMPA

HDR

HDR Engineering, Inc.
2621 Cattlemen Rd., Ste. 106
Sarasota, Fl 34232-6212
(941) 342-2700
CA00004213

ISSUE	DATE	DESCRIPTION
0	10/2011	ISSUED FOR CONSTRUCTION

PROJECT MANAGER	R. SIEMERING
REVIEWED BY	J. TIMMONS, R. SIEMERING
CIVIL DESIGN	C. RESTREPO, T. YANOSCHACK
DRAWN BY	B. JOHNSON
PROJECT NUMBER	00096-130530-005

THOMAS M. YANOSCHAK, P. E.
CERTIFICATE NO. 44200

SARASOTA COUNTY

Central County Solid Waste Disposal Complex

PHASE I CLASS I LANDFILL CLOSURE AND LANDFILL GAS COLLECTION SYSTEM CONSTRUCTION DRAWINGS

SARASOTA COUNTY FLORIDA

PHASE I CLOSURE COVER KEY SHEET

0 1" 2"

FILENAME	00C-09_KEY.DWG
SCALE	1"=100'

SHEET C-06

c:\pwworking\tpa\d0318297\00C-09_Key.DWG, Plot, 9/16/2011 10:54:25 AM, BradJohn

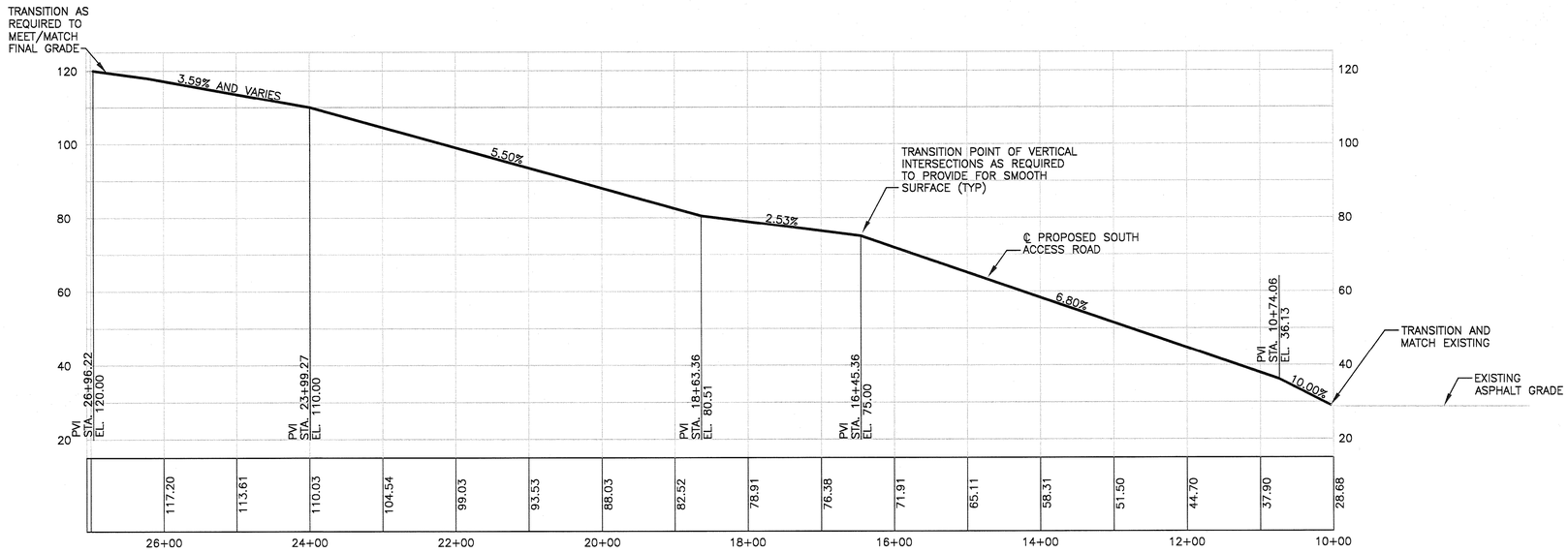

ACCESS ROAD PROFILE

1" = 100' HORIZ. 1" = 20' VERT. (1 / C-07)

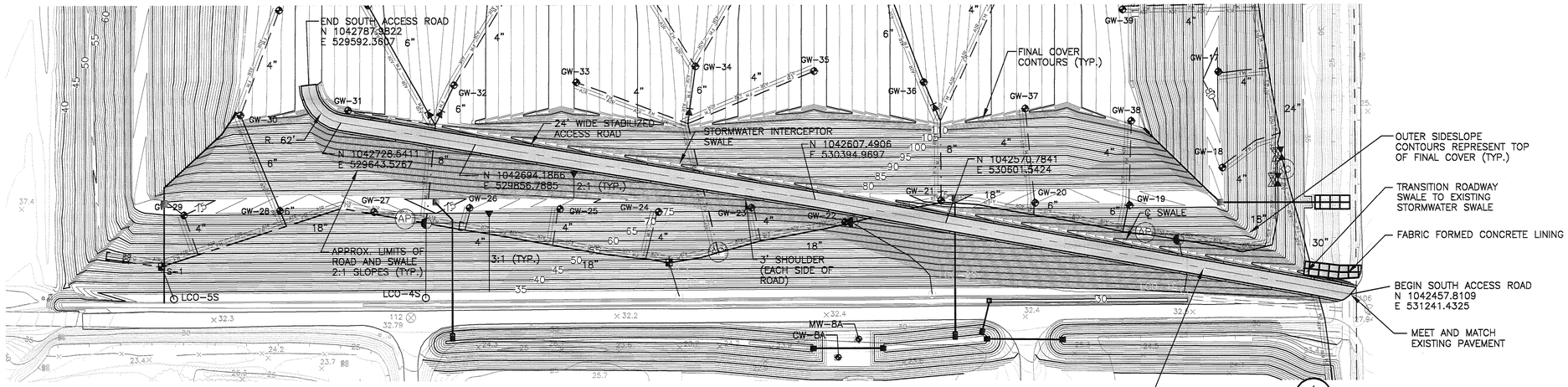

ACCESS ROAD PLAN

SCALE 1" = 100' HORIZ. (2 / C-05)

N

GRAPHIC SCALE

0 50 100 200

SCALE IN FEET
1" = 100'
AND AS SHOWN

NOTE

1. LANDFILL GAS COLLECTION SYSTEM AND STORMWATER FEATURES SHOWN TO PROVIDE CLARITY FOR CONSTRUCTION OF ROADWAY.

FLORIDA DEPARTMENT OF ENVIRONMENTAL PROTECTION
SEP 21 2011
SOUTHWEST DISTRICT
TAMPA

HDR
HDR Engineering, Inc.
2621 Cattlemen Rd., Ste. 106
Sarasota, Fl 34232-6212
(941) 342-2700
CA00004213

ISSUE	DATE	DESCRIPTION
0	10/2011	ISSUED FOR CONSTRUCTION

PROJECT MANAGER	R. SIEMERING
REVIEWED BY	J. TIMMONS, R. SIEMERING
CIVIL DESIGN	C. RESTREPO, T. YANOSCHACK
DRAWN BY	B. JOHNSON
PROJECT NUMBER	00096-130530-005

THOMAS M. YANOSCHAK, LICENSE No. 44200 * STATE OF FLORIDA * PROFESSIONAL ENGINEER

THOMAS M. YANOSCHAK, P. E.
CERTIFICATE NO. 44200

SARASOTA COUNTY

Central County Solid Waste Disposal Complex

PHASE I CLASS I LANDFILL CLOSURE AND LANDFILL GAS COLLECTION SYSTEM CONSTRUCTION DRAWINGS

SARASOTA COUNTY FLORIDA

PLAN AND PROFILE PHASE I ACCESS ROAD

0 1" 2"

FILENAME	00C-06.DWG
SCALE	AS SHOWN

SHEET C-07

c:\pwworking\tandd\31829700C-06.dwg, Plot, 9/16/2011 10:54:39 AM, Braddon

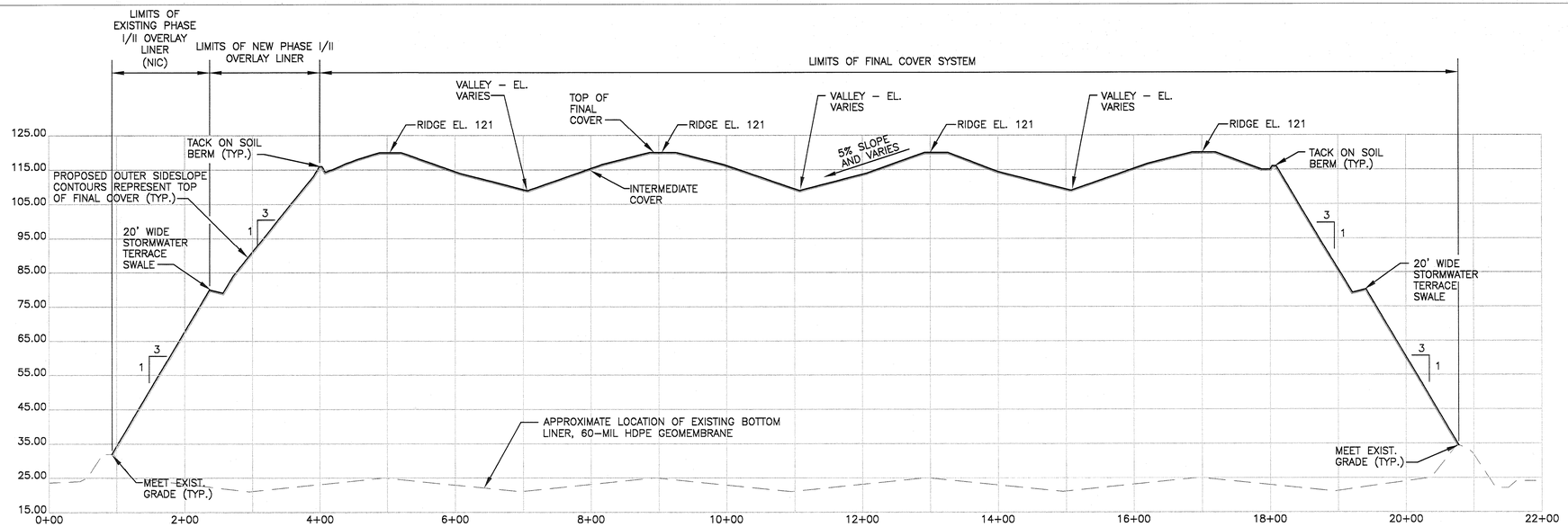

SECTION A (A / C-05)
1" = 100' HORIZ. 1" = 10' VERT.

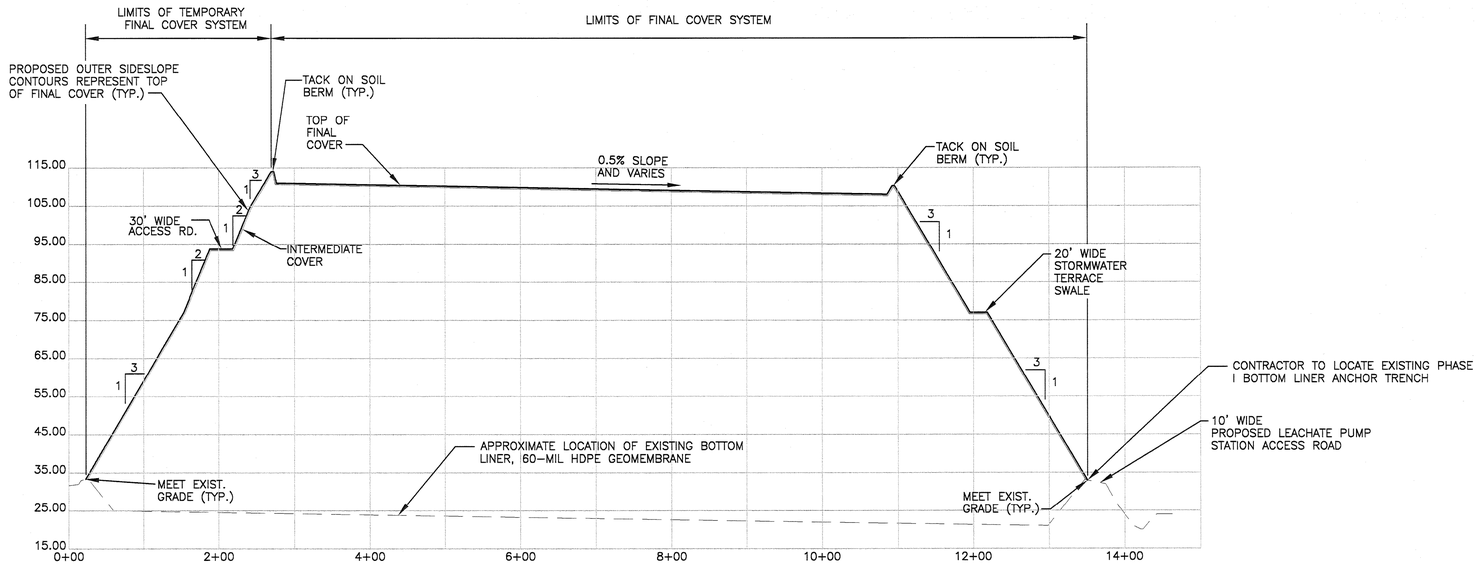

SECTION B (B / C-05)
1" = 100' HORIZ. 1" = 10' VERT.

NOTES

1. FILLING GRADES AND ELEVATIONS ARE APPROXIMATE, SEE PERMITTED FILLING PLAN PREPARE BY HDR ENGINEERING, INC. DATED JANUARY 2008, FOR GRADES AND ELEVATIONS.
2. OPERATIONAL AND FINAL WASTE GRADES SHALL NOT BE GREATER THAN 3:1.
3. MAINTAIN OPERATION BERMS AT ALL ACTIVE WORKING FACES TO CONTAIN ALL STORMWATER COMMINGLED WITH WASTE.
4. MAINTAIN POSITIVE DRAINAGE AT ALL TIMES.

HDR
HDR Engineering, Inc.
2621 Cattlemen Rd., Ste. 106
Sarasota, Fl 34232-6212
(941) 342-2700
CA00004213

ISSUE	DATE	DESCRIPTION
0	10/2011	ISSUED FOR CONSTRUCTION

PROJECT MANAGER	R. SIEMERING
REVIEWED BY	J. TIMMONS, R. SIEMERING
CIVIL DESIGN	C. RESTREPO, T. YANOSCHACK
DRAWN BY	B. JOHNSON
PROJECT NUMBER	00096-130530-005

THOMAS M. YANOSCHAK, P. E.
CERTIFICATE NO. 44200

SARASOTA COUNTY

Central County Solid Waste Disposal Complex

PHASE I CLASS I LANDFILL CLOSURE AND LANDFILL GAS COLLECTION SYSTEM CONSTRUCTION DRAWINGS

SARASOTA COUNTY FLORIDA

FULL BUILDOUT SECTIONS

FLORIDA DEPARTMENT OF ENVIRONMENTAL PROTECTION
SEP 21 2011
SOUTHWEST DISTRICT TAMPA

0 1" 2"

FILENAME	00C-07.DWG
SCALE	AS SHOWN

SHEET C-08

c:\pwworking\tpa\d0318297\00C-07.dwg, FULL BUILDOUT SECTIONS, 9/16/2011 10:54:46 AM, BradJohn

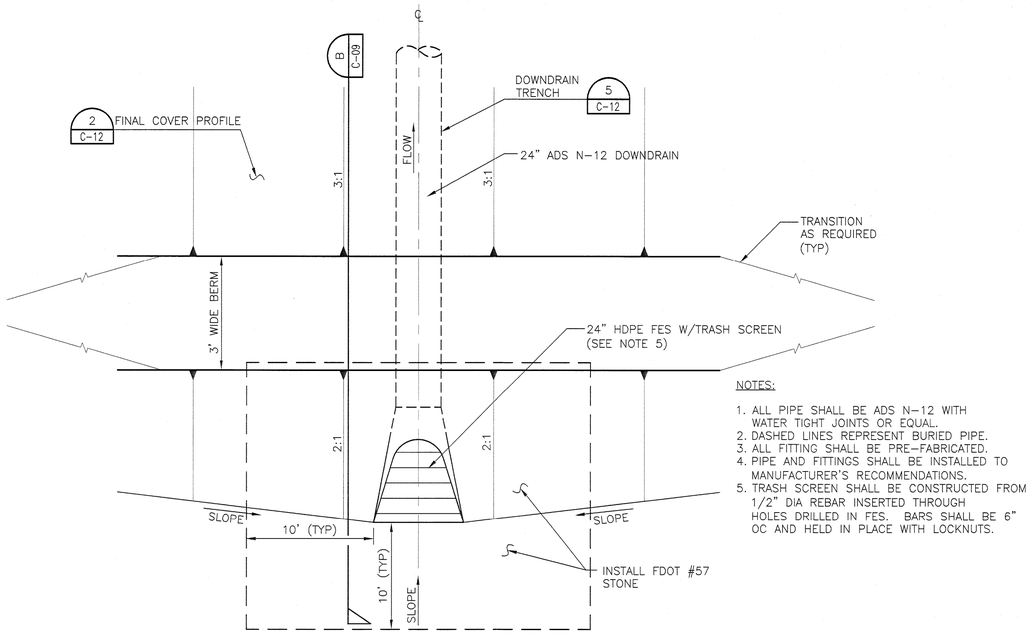

NOTES:

1. ALL PIPE SHALL BE ADS N-12 WITH WATER TIGHT JOINTS OR EQUAL.
2. DASHED LINES REPRESENT BURIED PIPE.
3. ALL FITTING SHALL BE PRE-FABRICATED.
4. PIPE AND FITTINGS SHALL BE INSTALLED TO MANUFACTURER'S RECOMMENDATIONS.
5. TRASH SCREEN SHALL BE CONSTRUCTED FROM 1/2" DIA REBAR INSERTED THROUGH HOLES DRILLED IN FES. BARS SHALL BE 6" OC AND HELD IN PLACE WITH LOCKNUTS.

PLAN VIEW

DOWNDRAIN AT TOP OF LANDFILL

1 C-05

NOT TO SCALE

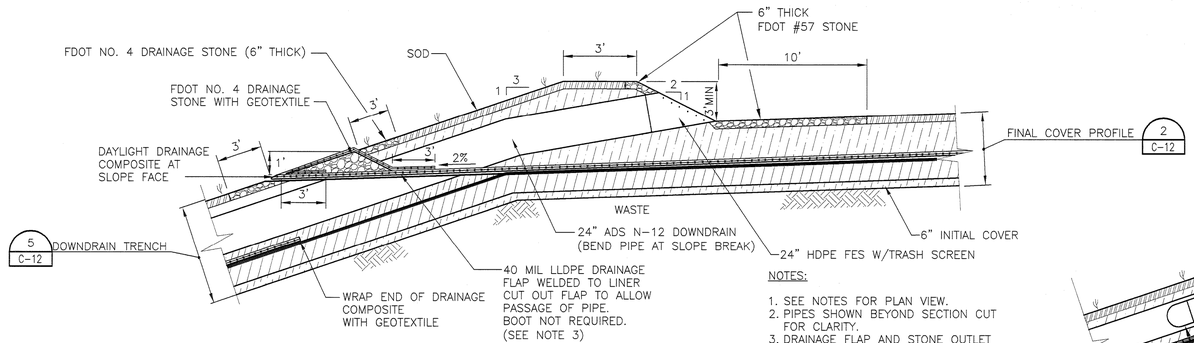

NOTES:

1. SEE NOTES FOR PLAN VIEW.
2. PIPES SHOWN BEYOND SECTION CUT FOR CLARITY.
3. DRAINAGE FLAP AND STONE OUTLET REQUIRED WHEREVER BERMS ARE REQUIRED AT THE TOP OF THE LANDFILL (SEE SHEET C-05)

SECTION B

B C-09

NOT TO SCALE

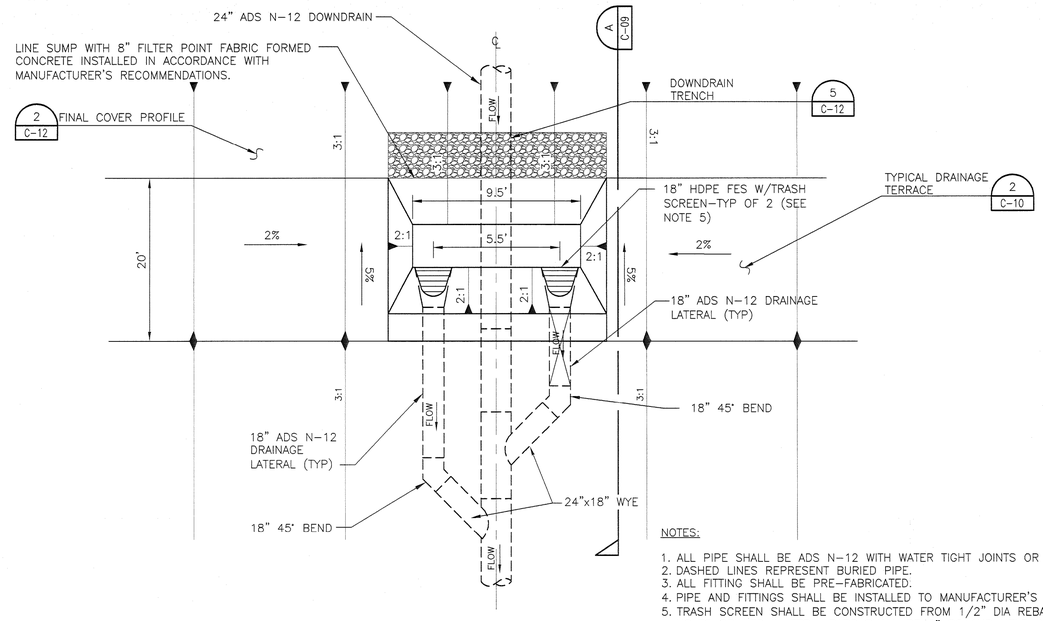

NOTES:

1. ALL PIPE SHALL BE ADS N-12 WITH WATER TIGHT JOINTS OR EQUAL.
2. DASHED LINES REPRESENT BURIED PIPE.
3. ALL FITTING SHALL BE PRE-FABRICATED.
4. PIPE AND FITTINGS SHALL BE INSTALLED TO MANUFACTURER'S RECOMMENDATIONS.
5. TRASH SCREEN SHALL BE CONSTRUCTED FROM 1/2" DIA REBAR INSERTED THROUGH HOLES DRILLED IN FES. BARS SHALL BE 6" OC AND HELD IN PLACE WITH LOCKNUTS.
6. SEE DETAIL 1, SHEET C-18 FOR TYPICAL TEMPORARY FINAL COVER INSTALLATION FOR SOUTH SLOPE.

PLAN VIEW

TERRACE / DOWNDRAIN INTERSECTION (NORTH AND EAST SLOPES)

2 C-05

NOT TO SCALE

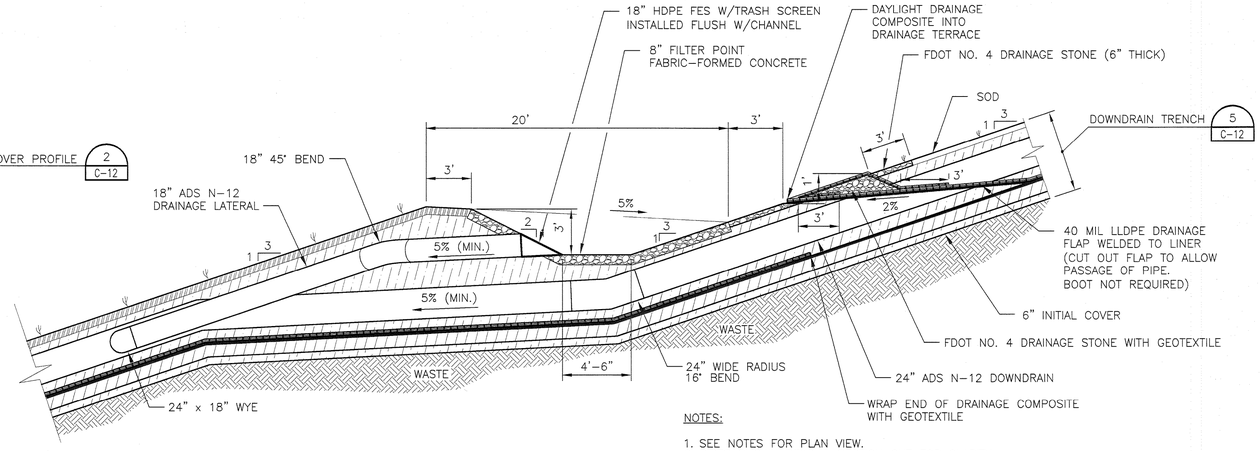

NOTES:

1. SEE NOTES FOR PLAN VIEW.
2. PIPES SHOWN BEYOND SECTION CUT FOR CLARITY.
3. EXCAVATE WASTE AS NEEDED TO ALLOW PLACEMENT OF 24" DOWNDRAIN.

SECTION A

A C-09

NOT TO SCALE

HDR
HDR Engineering, Inc.
2621 Cattlemen Rd., Ste. 106
Sarasota, Fl 34232-6212
(941) 342-2700
CA00004213

ISSUE	DATE	DESCRIPTION
0	10/2011	ISSUED FOR CONSTRUCTION

PROJECT MANAGER	R. SIEMERING
REVIEWED BY	J. TIMMONS, R. SIEMERING
CIVIL DESIGN	C. RESTREPO, T. YANOSCHACK
DRAWN BY	B. JOHNSON
PROJECT NUMBER	00096-130530-005

THOMAS M. YANOSCHAK, P. E.
CERTIFICATE NO. 44200

SARASOTA COUNTY

Central County Solid Waste Disposal Complex

PHASE I CLASS I LANDFILL CLOSURE AND LANDFILL GAS COLLECTION SYSTEM CONSTRUCTION DRAWINGS

FLORIDA

PHASE I CLOSURE DETAILS

FLORIDA DEPARTMENT OF ENVIRONMENTAL PROTECTION SEP 21 2011 SOUTHWEST DISTRICT TAMPA

0 1" 2"

FILENAME	00D-01.DWG
SCALE	AS SHOWN

SHEET C-09

C:\pwworking\tpa\d0313270\00D-01.dwg, Plot, 9/16/2011 10:55:57 AM, BradJohn

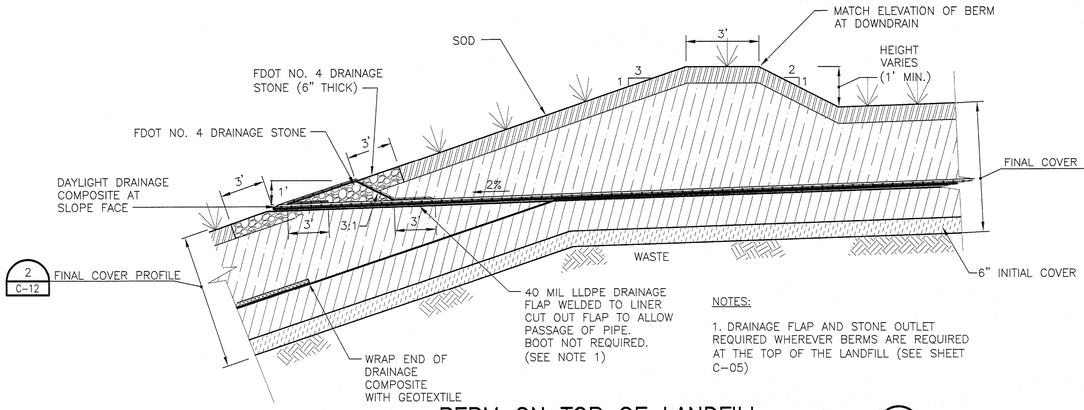

NOTES:

1. DRAINAGE FLAP AND STONE OUTLET REQUIRED WHEREVER BERMS ARE REQUIRED AT THE TOP OF THE LANDFILL (SEE SHEET C-05)

BERM ON TOP OF LANDFILL

NOT TO SCALE

1 C-05

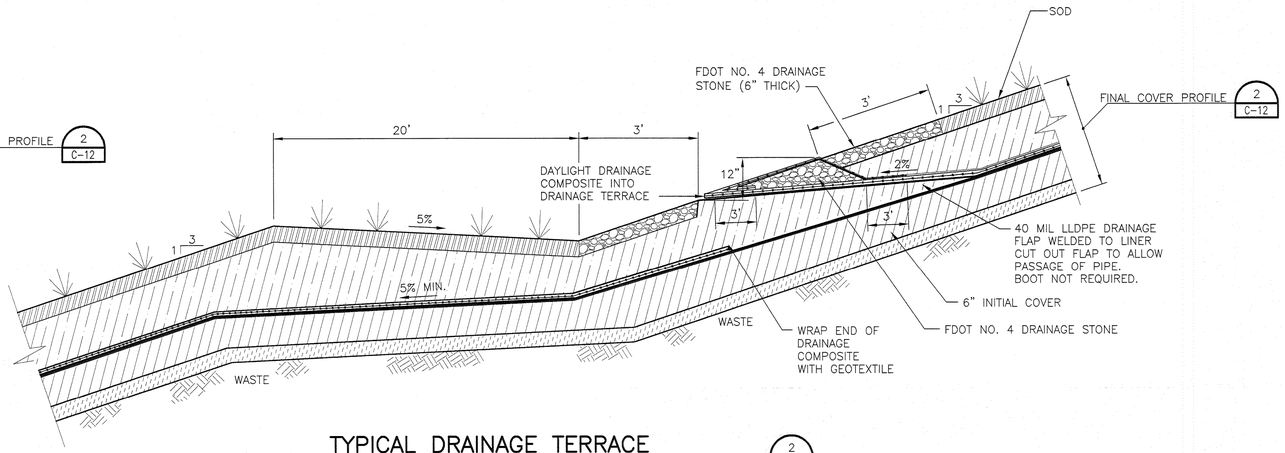

TYPICAL DRAINAGE TERRACE

NOT TO SCALE

2 C-05 C-09 C-18

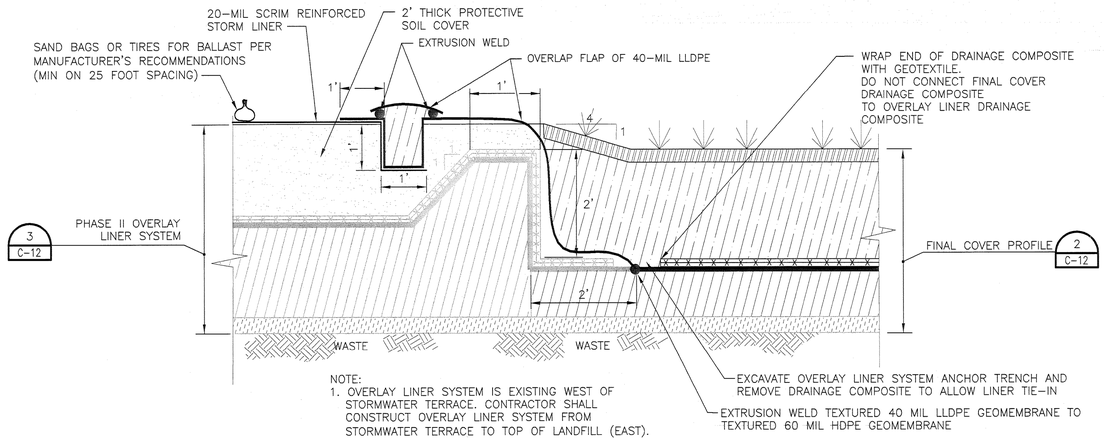

NOTE:

1. OVERLAY LINER SYSTEM IS EXISTING WEST OF STORMWATER TERRACE. CONTRACTOR SHALL CONSTRUCT OVERLAY LINER SYSTEM FROM STORMWATER TERRACE TO TOP OF LANDFILL (EAST).

TRANSITION FINAL COVER (SIDE SLOPE) TO PHASE I/II OVERLAY LINER SYSTEM

NOT TO SCALE

3 C-05

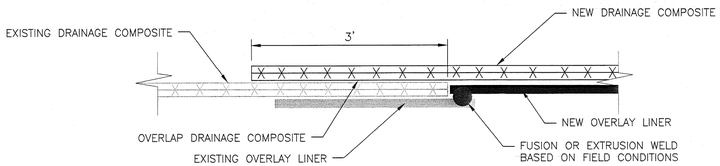

EXISTING OVERLAY LINER TO NEW OVERLAY LINER TIE-IN

NOT TO SCALE

5 C-05

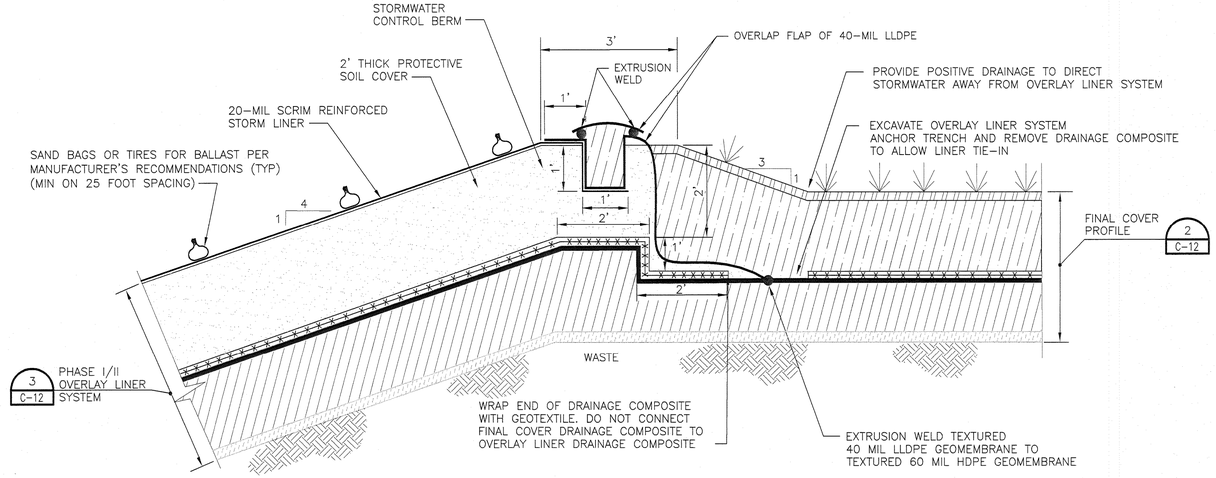

TRANSITION FINAL COVER (TOP SLOPE) TO PHASE I/II OVERLAY LINER SYSTEM

NOT TO SCALE

4 C-05

HDR
HDR Engineering, Inc.
2621 Cattlemen Rd., Ste. 106
Sarasota, Fl 34232-6212
(941) 342-2700
CA00004213

ISSUE	DATE	DESCRIPTION
0	10/2011	ISSUED FOR CONSTRUCTION

PROJECT MANAGER	R. SIEMERING
REVIEWED BY	J. TIMMONS, R. SIEMERING
CIVIL DESIGN	C. RESTREPO, T. YANOSCHACK
DRAWN BY	B. JOHNSON
PROJECT NUMBER	00096-130530-005

THOMAS M. YANOSCHAK, P. E.
CERTIFICATE NO. 44200

SARASOTA COUNTY

Central County Solid Waste Disposal Complex

PHASE I CLASS I LANDFILL CLOSURE AND LANDFILL GAS COLLECTION SYSTEM CONSTRUCTION DRAWINGS

SARASOTA COUNTY FLORIDA

PHASE I CLOSURE DETAILS

FLORIDA DEPARTMENT OF ENVIRONMENTAL PROTECTION
SEP 21 2011
SOUTHWEST DISTRICT TAMPA

0 1" 2"

FILENAME	00D-02.DWG
SCALE	AS SHOWN

SHEET C-10

C:\pwworking\tpa\d0315297\00D-02.dwg, Pcd, 9/16/2011 10:58:07 AM, Braddonn

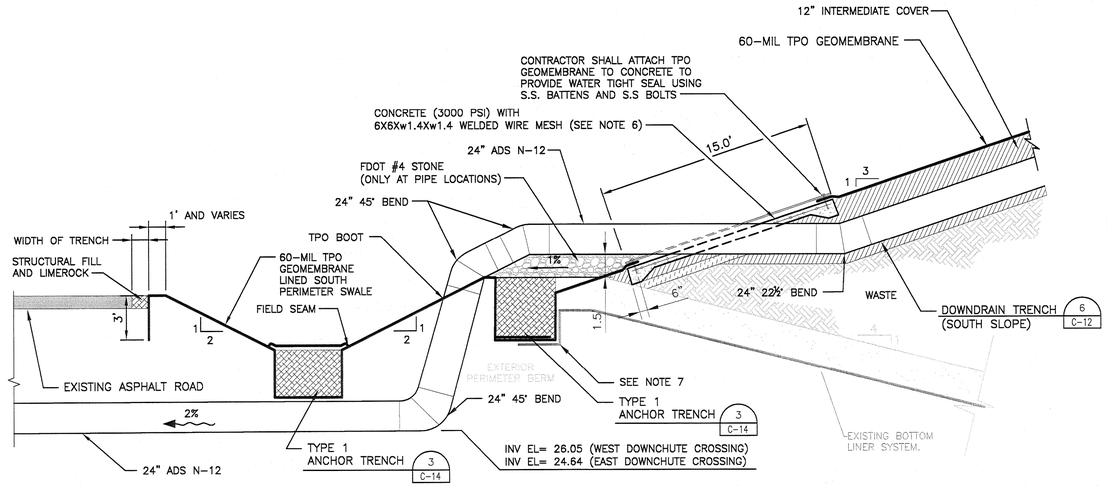

STORMWATER DOWNDRAIN DISCHARGE AT ROAD CROSSING

1 C-05 C-10A

NOT TO SCALE

NOTES:

1. ALL PIPE SHALL BE ADS N-12 WITH WATER TIGHT JOINTS OR EQUAL.
2. ALL PIPE FITTINGS SHALL BE PREFABRICATED AND SHALL BE INSTALLED PER MANUFACTURER'S RECOMMENDATIONS.
3. CAREFULLY EXPOSE EXISTING BOTTOM LINER AND PLACE TPO GEOMEMBRANE ON TOP.
4. DO NOT WELD TPO GEOMEMBRANE TO EXISTING BOTTOM LINER.
5. ANNULAR SPACE BETWEEN CONCRETE AND PIPE SHALL BE FILLED WITH WEATHER RESISTANT SEALANT OR APPROVED EQUAL.
6. CONCRETE PAD SHALL BE LENGTH SHOWN AND WIDTH BASED ON FDOT INDEX 273 FOR MITERED END SECTION FOR 24" PIPE.
7. CONTRACTOR TO LOCATE EXISTING PHASE I BOTTOM LINER ANCHOR TRENCH.

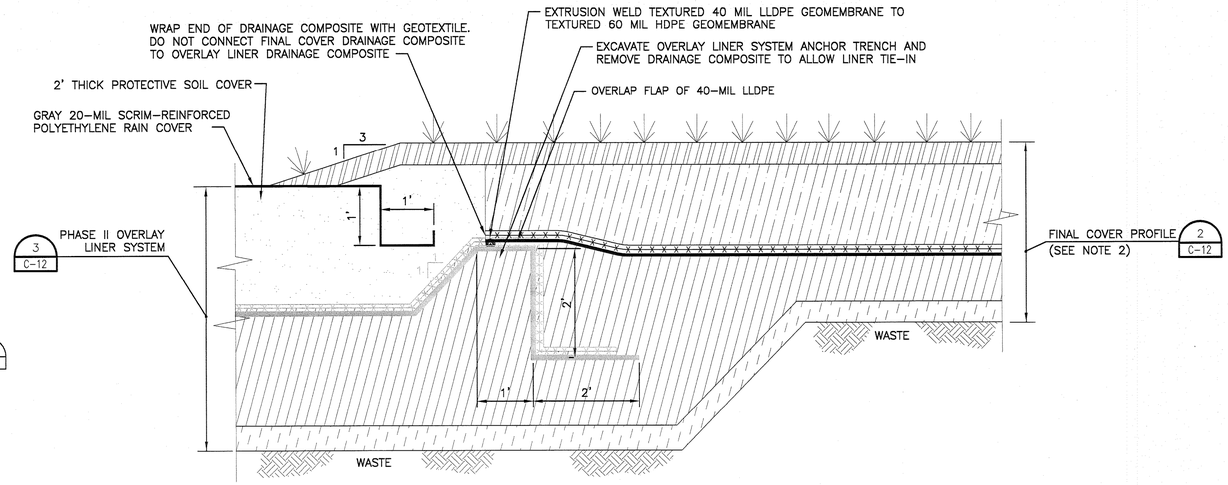

NOTE:
1. OVERLAY LINER SYSTEM IS EXISTING WEST OF STORMWATER TERRACE. CONTRACTOR SHALL CONSTRUCT OVERLAY LINER SYSTEM FROM STORMWATER TERRACE TO TOP OF LANDFILL (EAST).
2. THICKNESS OF INTERMEDIATE COVER VARIES. MINIMUM 1 FOOT.

TRANSITION FINAL COVER (SIDE SLOPE) TO PHASE I/II OVERLAY LINER SYSTEM

3 C-05

NOT TO SCALE

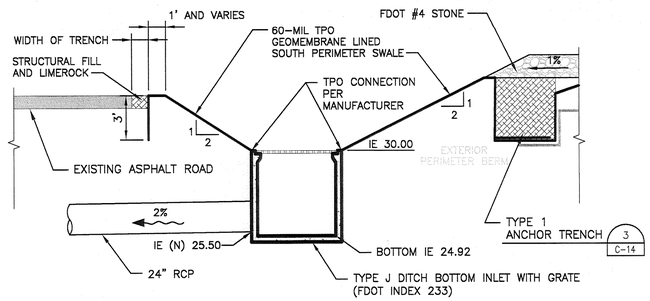

TPO CONNECTION TO DITCH BOTTOM INLET

4 C-05

NOT TO SCALE

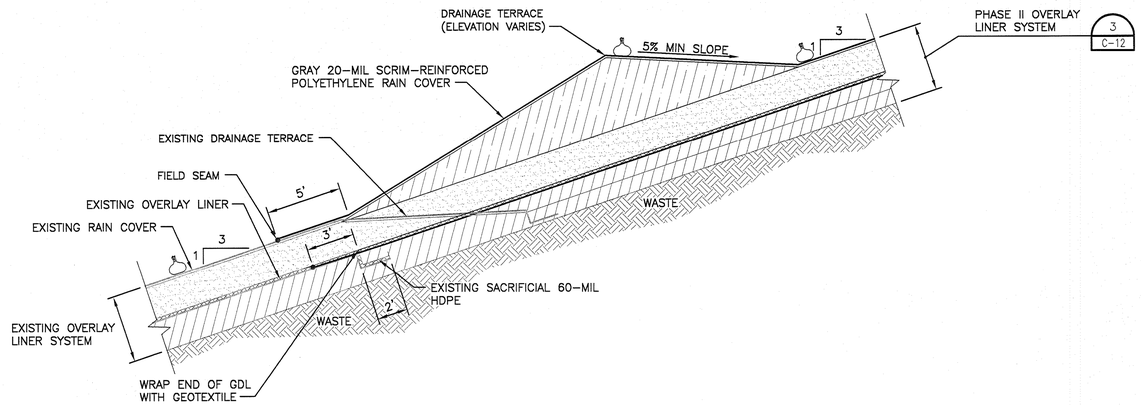

TRANSITION EXISTING OVERLAY LINER TO PROPOSED OVERLAY LINER

2 C-05

NOT TO SCALE

HDR Engineering, Inc.
2621 Cattlemen Rd., Ste. 106
Sarasota, Fl 34232-6212
(941) 342-2700
CA00004213

ISSUE	DATE	DESCRIPTION
0	10/2011	ISSUED FOR CONSTRUCTION

PROJECT MANAGER	R. SIEMERING
REVIEWED BY	J. TIMMONS, R. SIEMERING
CIVIL DESIGN	C. RESTREPO, T. YANOSCHACK
DRAWN BY	B. JOHNSON
PROJECT NUMBER	00096-130530-005

THOMAS M. YANOSCHAK, LICENSE No. 44200 STATE OF FLORIDA PROFESSIONAL ENGINEER

THOMAS M. YANOSCHAK, P. E.
CERTIFICATE NO. 44200

SARASOTA COUNTY

Central County Solid Waste Disposal Complex

PHASE I CLASS I LANDFILL CLOSURE AND LANDFILL GAS COLLECTION SYSTEM CONSTRUCTION DRAWINGS

SARASOTA COUNTY FLORIDA

FLORIDA DEPARTMENT OF ENVIRONMENTAL PROTECTION SEP 21 2011 SOUTHWEST DISTRICT TAMPA

PHASE I CLOSURE DETAILS

0 1" 2"

FILENAME	00D-02A.DWG
SCALE	AS SHOWN

SHEET C-10A

c:\pwworking\tpa\d0313527\00D-02A.dwg, Plot, 9/19/2011 16:56:17 AM, Braddon

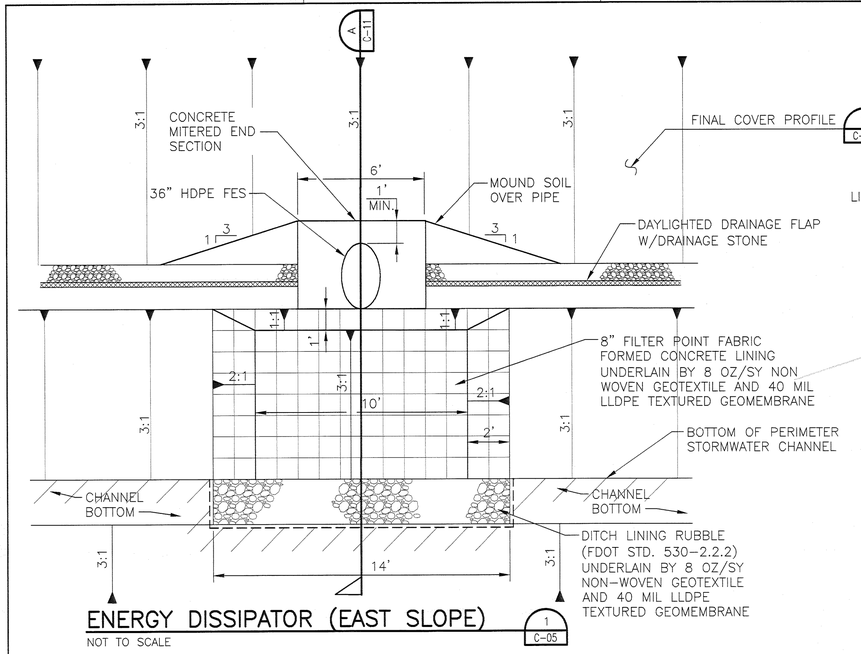

ENERGY DISSIPATOR (EAST SLOPE)

1 C-05

NOT TO SCALE

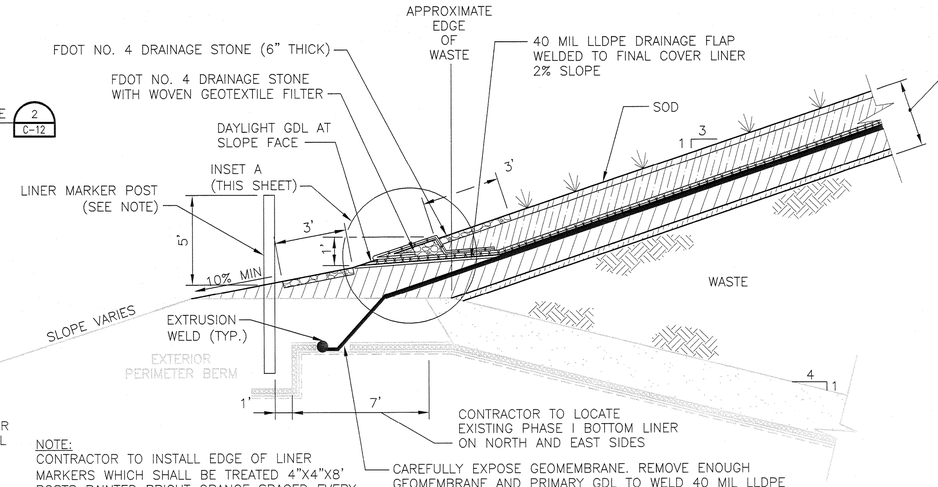

NOTE:
CONTRACTOR TO INSTALL EDGE OF LINER MARKERS WHICH SHALL BE TREATED 4"X4"X8' POSTS PAINTED BRIGHT ORANGE SPACED EVERY 100-FEET ALONG PHASE I ANCHOR TRENCH EXCEPT ON SOUTH SIDE.

FINAL COVER TIE-IN

2 C-05

NOT TO SCALE

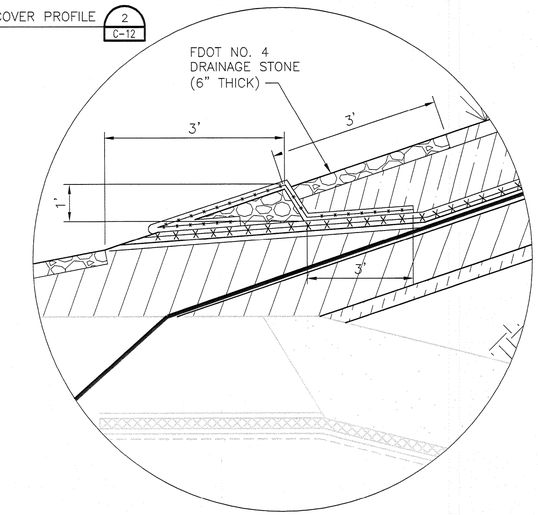

INSET A

SCALE: NOT TO SCALE

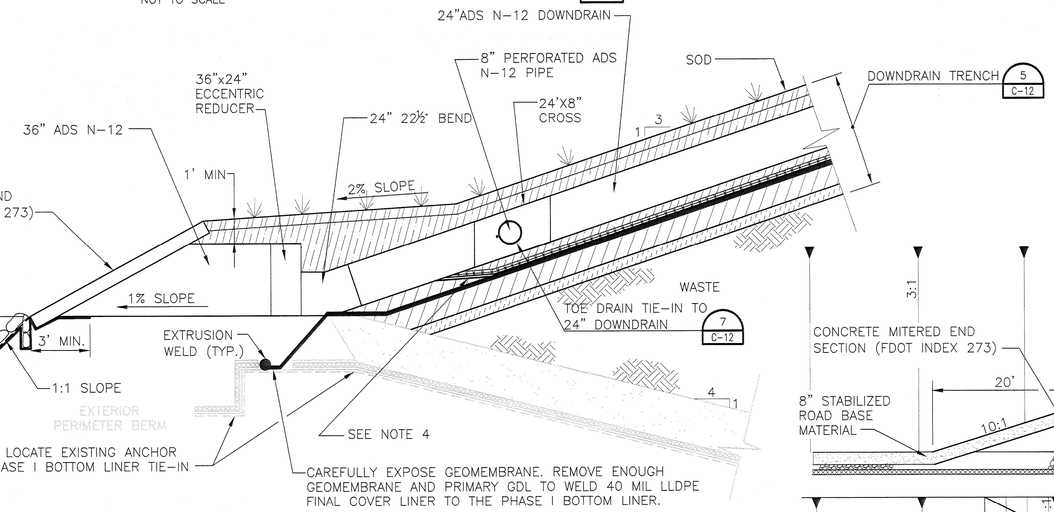

NOTES:

1. ALL PIPE SHALL BE ADS N-12 WITH WATER TIGHT JOINTS OR EQUAL.
2. ALL PIPE FITTINGS SHALL BE PREFABRICATED.
3. PIPE, FITTINGS, AND FABRIC FORMED CONCRETE LINING SHALL BE INSTALLED PER MANUFACTURER'S RECOMMENDATIONS.
4. DRAINAGE FLAP AND DRAINAGE STONE NOT SHOWN FOR CLARITY. SEE DETAIL 2 THIS SHEET FOR TYPICAL FLAP CONSTRUCTION AT TOE OF SLOPE.

SECTION A

A C-11

NOT TO SCALE

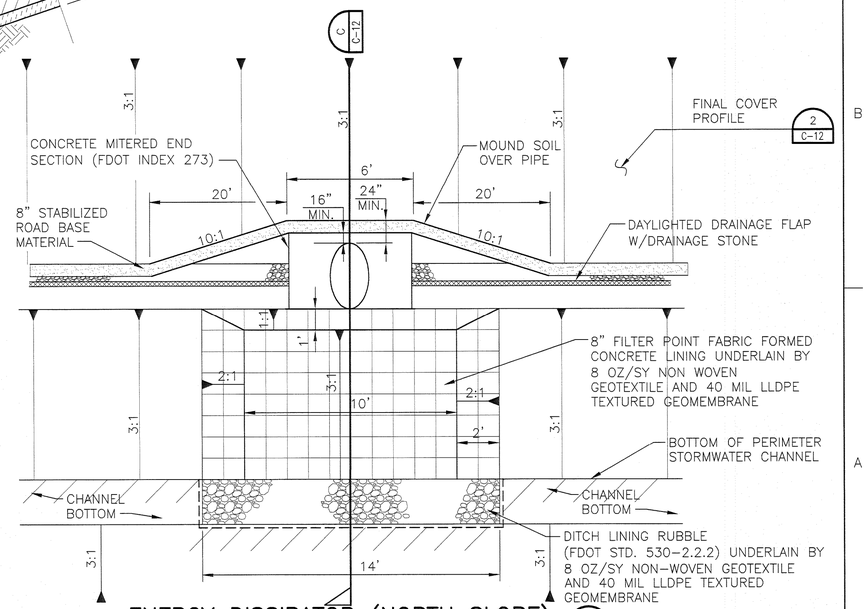

ENERGY DISSIPATOR (NORTH SLOPE)

3 C-05

NOT TO SCALE

HDR
HDR Engineering, Inc.
2621 Cattlemen Rd., Ste. 106
Sarasota, Fl 34232-6212
(941) 342-2700
CA00004213

ISSUE	DATE	DESCRIPTION
0	10/2011	ISSUED FOR CONSTRUCTION

PROJECT MANAGER	R. SIEMERING
REVIEWED BY	J. TIMMONS, R. SIEMERING
CIVIL DESIGN	C. RESTREPO, T. YANOSCHACK
DRAWN BY	B. JOHNSON
PROJECT NUMBER	00096-130530-005

THOMAS M. YANOSCHAK, P. E.
CERTIFICATE NO. 44200

SARASOTA COUNTY

Central County Solid Waste Disposal Complex

PHASE I CLASS I LANDFILL CLOSURE AND LANDFILL GAS COLLECTION SYSTEM CONSTRUCTION DRAWINGS

SARASOTA COUNTY FLORIDA

FLORIDA DEPARTMENT OF ENVIRONMENTAL PROTECTION
SEP 21 2011
SOUTHWEST DISTRICT TAMPA

PHASE I CLOSURE DETAILS

0 1" 2"

FILENAME	00D-03.DWG
SCALE	AS SHOWN

SHEET C-11

c:\pwworking\tpa\d0318237\00D-03.DWG, Plot: 9/16/2011 10:56:24 AM, BradJohn

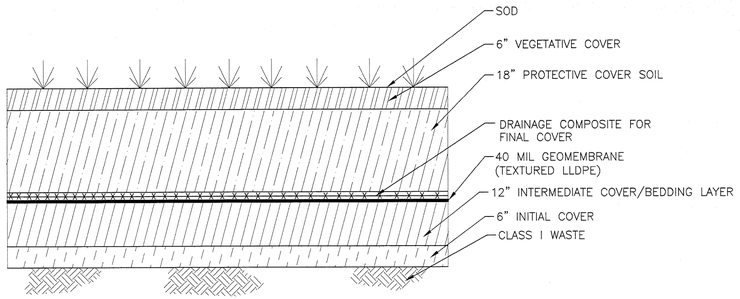

FINAL COVER PROFILE

NOT TO SCALE

2 | C-05 | C-09 | C-10 | C-11 | C-17

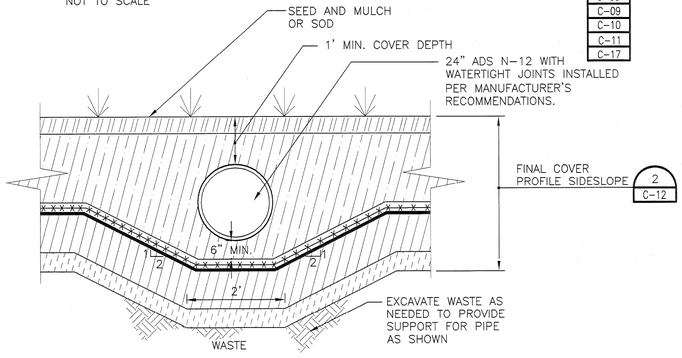

DOWN DRAIN TRENCH (NORTH, EAST SLOPES)

NOT TO SCALE

5 | C-05 | C-09 | C-11

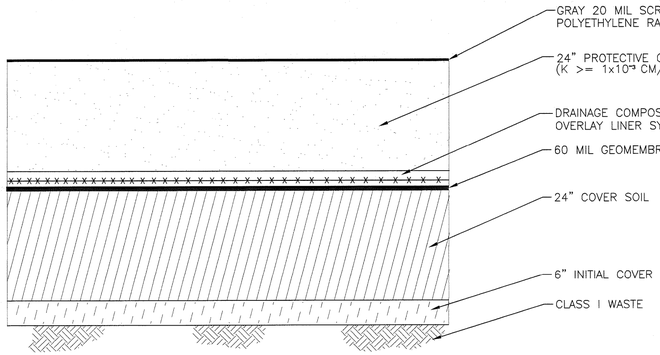

PHASE I/II OVERLAY LINER SYSTEM

NOT TO SCALE

3 | C-05 | C-10 | C-17

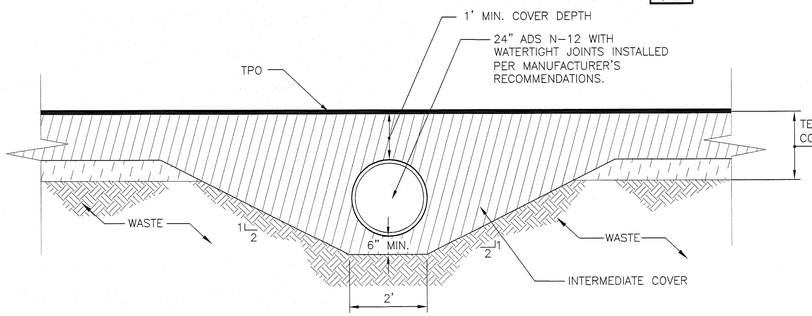

DOWNDRAIN TRENCH (SOUTH SLOPE)

NOT TO SCALE

6 | C-05 | C-18 | C-19

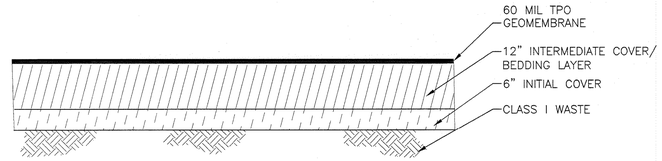

TEMPORARY FINAL COVER (SOUTH SLOPE)

NOT TO SCALE

4 | C-14 | C-15 | C-17 | C-18

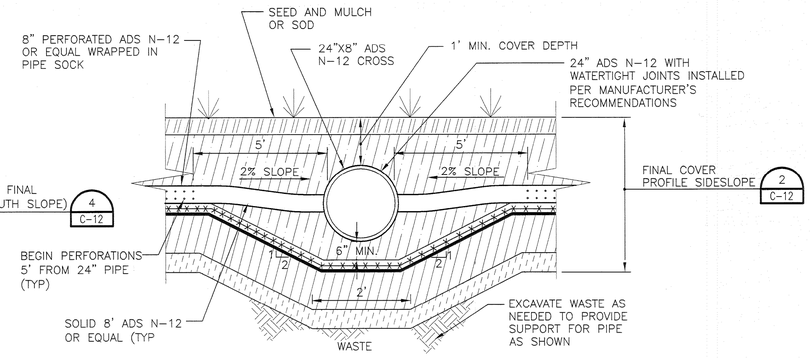

TOE DRAIN TIE-IN TO 24" DOWNDRAIN

NOT TO SCALE

7 | C-05 | C-11

NOTES:

1. ALL PIPE SHALL BE ADS N-12 WITH WATER TIGHT JOINTS OR EQUAL.
2. ALL PIPE FITTINGS SHALL BE PREFABRICATED.
3. PIPE, FITTINGS, AND FABRIC FORMED CONCRETE LINING SHALL BE INSTALLED PER MANUFACTURER'S RECOMMENDATIONS.
4. DRAINAGE FLAP AND DRAINAGE STONE NOT SHOWN FOR CLARITY. SEE DETAIL 2 ON SHEET C-11 FOR TYPICAL FLAP CONSTRUCTION AT TOE OF SLOPE.
5. BEGIN PERFORATIONS 5 FEET FROM 24" PIPE.

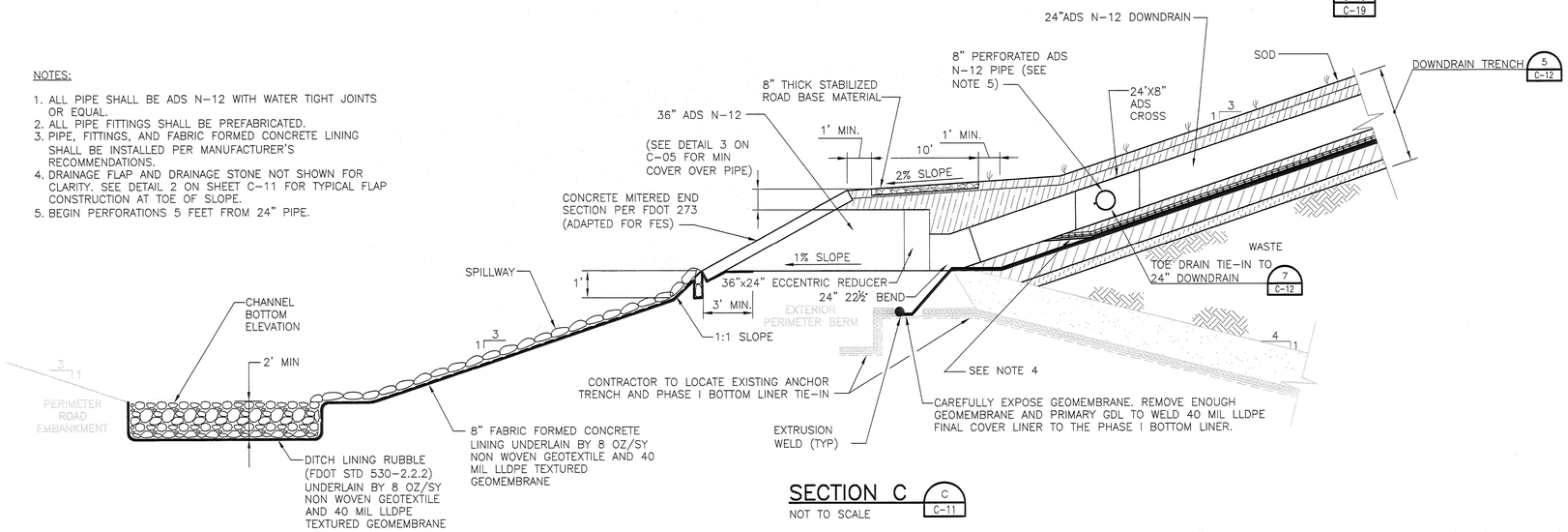

SECTION C

NOT TO SCALE

C | C-11

FLORIDA DEPARTMENT OF ENVIRONMENTAL PROTECTION
SEP 21 2011
SOUTHWEST DISTRICT TAMPA

HDR Engineering, Inc.
2621 Cattlemen Rd., Ste. 106
Sarasota, Fl 34232-6212
(941) 342-2700
CA00004213

ISSUE	DATE	DESCRIPTION
0	10/2011	ISSUED FOR CONSTRUCTION

PROJECT MANAGER	R. SIEMERING
REVIEWED BY	J. TIMMONS, R. SIEMERING
CIVIL DESIGN	C. RESTREPO, T. YANOSCHACK
DRAWN BY	B. JOHNSON
PROJECT NUMBER	00096-130530-005

THOMAS M. YANOSCHAK, P. E.
CERTIFICATE NO. 44200

SARASOTA COUNTY

Central County Solid Waste Disposal Complex

PHASE I CLASS I LANDFILL CLOSURE AND LANDFILL GAS COLLECTION SYSTEM CONSTRUCTION DRAWINGS

SARASOTA COUNTY FLORIDA

PHASE I CLOSURE DETAILS

0 1" 2"

FILENAME	00D-04.DWG
SCALE	AS SHOWN

SHEET C-12

c:\pwworking\tpa\d0313529700D-04.dwg, Plot, 9/16/2011 10:56:29 AM, BradJohn

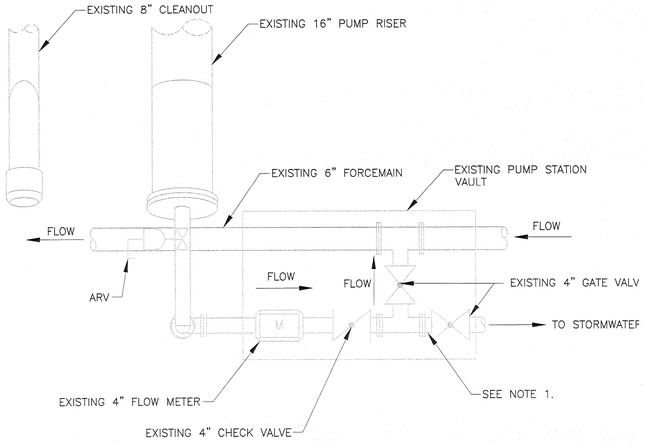

NOTE 1: CONTRACTOR SHALL REMOVE PIPING FROM VAULT TO STORMWATER.

PLAN VIEW

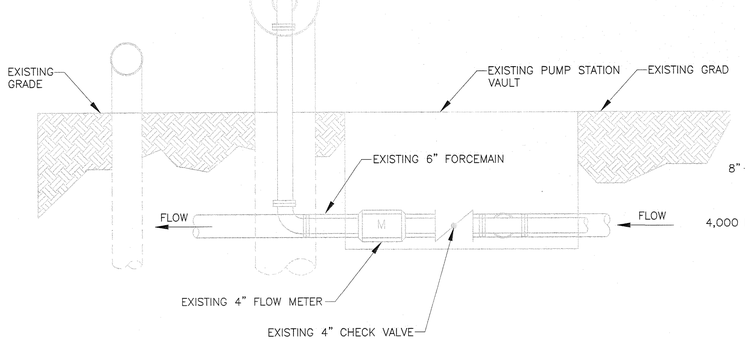

EXISTING LEACHATE PUMP STATION (TYP.) 1 C-05

NOT TO SCALE

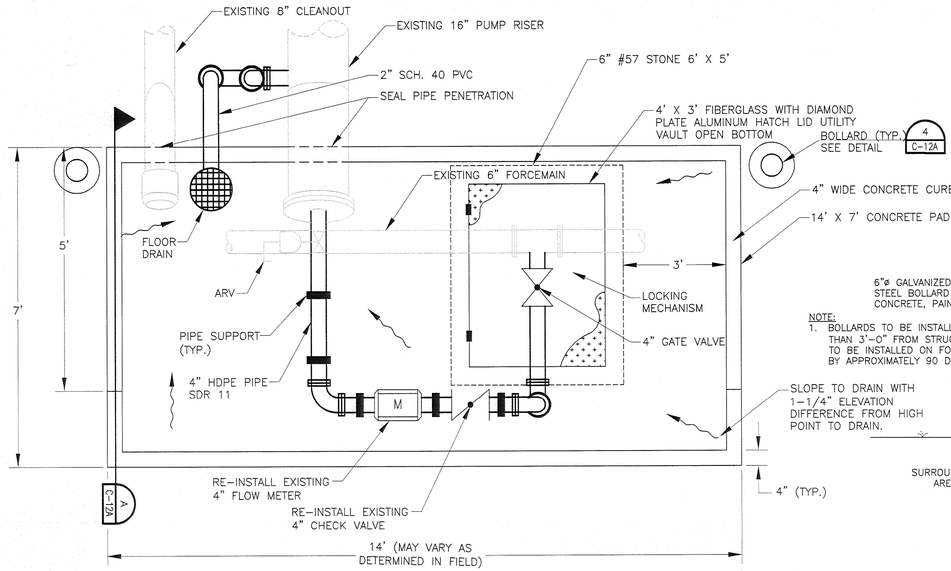

PLAN VIEW

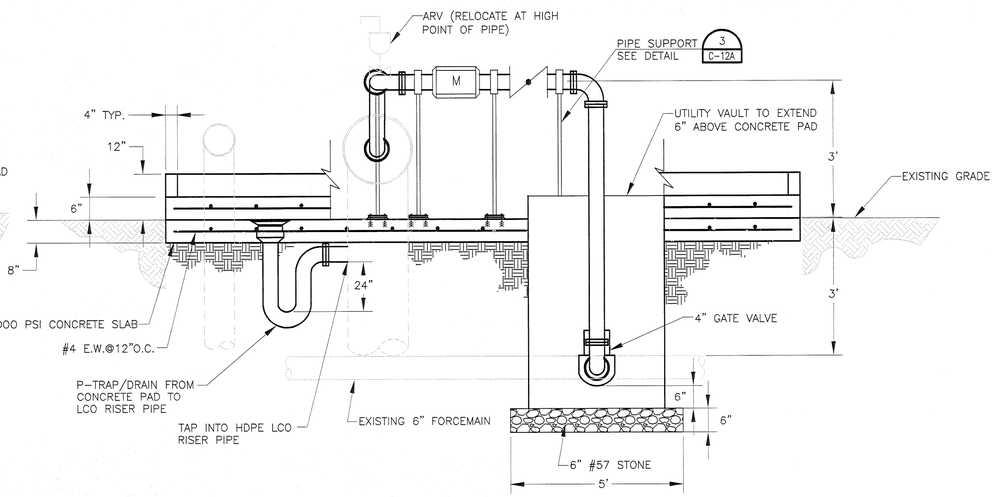

PROPOSED LEACHATE PUMP STATION (TYP.) 2 C-05

NOT TO SCALE

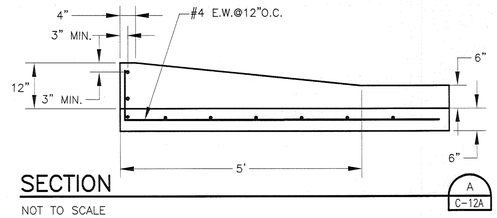

SECTION A C-12A

NOT TO SCALE

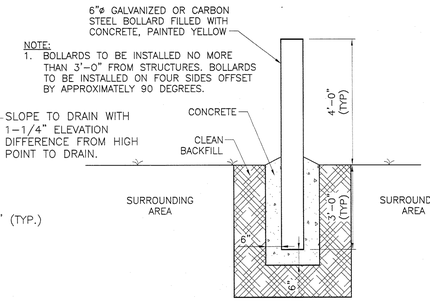

BOLLARD (TYP) 4 C-12A

NOT TO SCALE

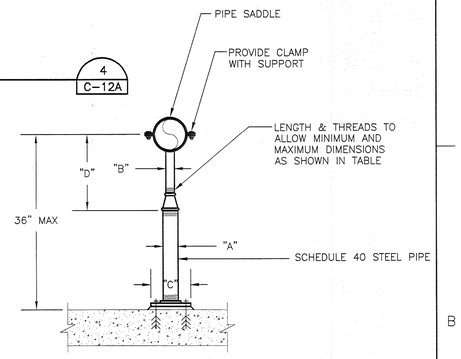

PIPE SUPPORT DETAIL 3 C-12A

NOT TO SCALE

FLOOR PIPE SUPPORT SCHEDULE
DIMENSIONS IN INCHES

PIPE SIZE	"A"	"B"	"C"	"D"		ANCHORS	
				MINIMUM	MAXIMUM	DIA	EMBED
≤ 2 1/2	2 1/2	1 1/2	9	8	13	5/8	5
3	2 1/2	1 1/2	9	8 1/2	13 1/2	5/8	5
3 1/2	2 1/2	1 1/2	9	8 1/2	13 1/2	5/8	5
4	3	2 1/2	9	9 1/2	14	5/8	5
6	3	2 1/2	9	10 1/2	15 1/2	5/8	5
8	3	2 1/2	9	11 1/2	16 1/2	5/8	5
10	3	2 1/2	9	13 1/2	18 1/2	5/8	5
12	3	2 1/2	9	15	19 1/2	5/8	5
14	4	3	11	16 1/2	20 1/2	3/4	6 5/8
16	4	3	11	17 1/2	22 1/2	3/4	6 5/8
18	6	3 1/2	13 1/2	19 1/2	24	3/4	6 5/8
20	6	3 1/2	13 1/2	21	25 1/2	3/4	6 5/8
24	6	4	13 1/2	23 1/2	28 1/2	3/4	6 5/8
30	6	4	13 1/2	27	31 1/2	3/4	6 5/8
32	6	4	13 1/2	28 1/2	32 1/2	3/4	6 5/8
36	6	4	13 1/2	30 1/2	34 1/2	3/4	6 5/8

HDR
HDR Engineering, Inc.
2621 Cattlemen Rd., Ste. 106
Sarasota, Fl 34232-6212
(941) 342-2700
CA0004213

ISSUE	DATE	DESCRIPTION
0	10/2011	ISSUED FOR CONSTRUCTION

PROJECT MANAGER	R. SIEMERING
REVIEWED BY	J. TIMMONS, R. SIEMERING
CIVIL DESIGN	C. RESTREPO, T. YANOSCHACK
DRAWN BY	B. JOHNSON
PROJECT NUMBER	00096-130530-005

THOMAS M. YANOSCHAK, P. E.
CERTIFICATE NO. 44200

SARASOTA COUNTY

Central County Solid Waste Disposal Complex

PHASE I CLASS I LANDFILL CLOSURE AND LANDFILL GAS COLLECTION SYSTEM CONSTRUCTION DRAWINGS

SARASOTA COUNTY FLORIDA

FLORIDA DEPARTMENT OF ENVIRONMENTAL PROTECTION
SEP 21 2011
SOUTHWEST DISTRICT TAMPA

PHASE I CLOSURE DETAILS

0 1" 2"

FILENAME	00D-12A.DWG
SCALE	AS SHOWN

SHEET C-12A

c:\pwworking\tpa\d0318297000\D-12a.DWG, Plot, 9/16/2011 10:56:34 AM, BradJohn

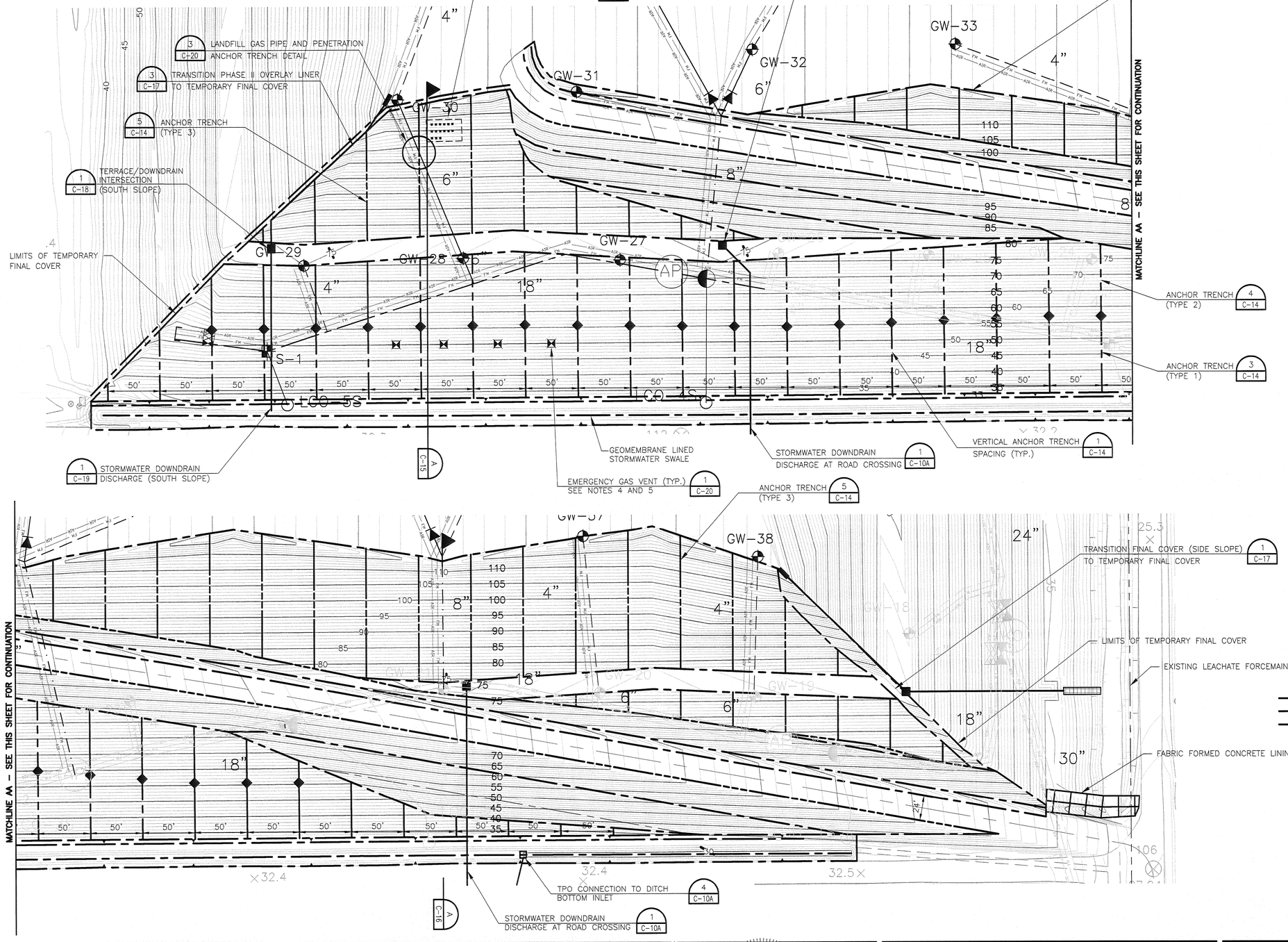

NOTES:

1. TOPOGRAPHY WITHIN PHASES I THROUGH IV AREAS COMPILED BY KUCERA INTERNATIONAL, INC., OF WILLOUGHBY, OHIO USING PHOTOGRAMMETRIC METHODS FROM AERIAL PHOTOGRAPHS DATED JUNE 2, 2010.
2. LOCATION OF ANCHOR TRENCHES SHALL BE ADJUSTED IN THE FIELD BASED ON ACTUAL LOCATION OF GAS WELLS AND LFG ACCESS POINTS.
3. THE ANCHOR TRENCH LOCATIONS SHOWN ARE CONCEPTUAL AND SUBJECT TO CHANGE BASED ON CONTRACTORS APPROVED PANEL LAYOUT.
4. THE CONTRACTOR SHALL INSTALL EMERGENCY GAS VENTS FOR EACH PANEL. PLEASE NOTE THAT NOT ALL VENTS ARE SHOWN ON THIS DRAWING. A PANEL IS DEFINED AS A SECTION OF TPO BETWEEN ANCHOR TRENCHES.
5. THE EMERGENCY GAS VENTS ARE GENERALLY CLOSED WITH A CAM GROOVE FITTING WHICH WILL BE OPENED MANUALLY IN THE EVENT OF PRESSURE BUILD UP. THE ACTIVE GAS COLLECTION SYSTEM MAY BE CONNECTED TO THESE VENTS IF DEEMED NECESSARY IN THE FUTURE FOR CONTINUOUS GAS EXTRACTION.
6. FIFTEEN 60-MIL TPO GEOMEMBRANE TEST PANELS TO BE PROVIDED IN DESIGNATED LOCATION.

LEGEND

- GW-38 PROPOSED LFG WELLS
- GW-58 EXISTING LFG WELLS
- ℄ ANCHOR TRENCH (TYPE 3)
- ℄ ANCHOR TRENCH (TYPE 2)
- ℄ ANCHOR TRENCH (TYPE 1)
- EXISTING LFG ACCESS POINT
- PROPOSED LFG ACCESS POINT
- REMOTE WELLHEAD
- PROPOSED GAS VENT
- ANCHOR TRENCH TYPE TRANSITION POINT

FLORIDA DEPARTMENT OF ENVIRONMENTAL PROTECTION
SEP 21 2011
SOUTHWEST DISTRICT TAMPA

HDR
HDR Engineering, Inc.
2621 Cattlemen Rd., Ste. 106
Sarasota, Fl 34232-6212
(941) 342-2700
CA00004213

ISSUE	DATE	DESCRIPTION
0	10/2011	ISSUED FOR CONSTRUCTION

PROJECT MANAGER	R. SIEMERING
REVIEWED BY	M. ROBERTS
CIVIL DESIGN	K. PERERA
DRAWN BY	L. KARSHNER
PROJECT NUMBER	00096-130530-005

THOMAS M. YANOSCHAK, P. E.
CERTIFICATE NO. 44200

SARASOTA COUNTY

Central County Solid Waste Disposal Complex

PHASE I CLASS I LANDFILL CLOSURE AND LANDFILL GAS COLLECTION SYSTEM CONSTRUCTION DRAWINGS

SARASOTA COUNTY FLORIDA

PHASE I TEMPORARY FINAL COVER LAYOUT AND ANCHOR TRENCH PLAN

0 1" 2"

FILENAME	00D-05.DWG
SCALE	1"=50'

SHEET C-13

c:\pwworking\fsdet\d0315297\00D-05.dwg, Plot, 9/19/2011 10:56:47 AM, Bradshm

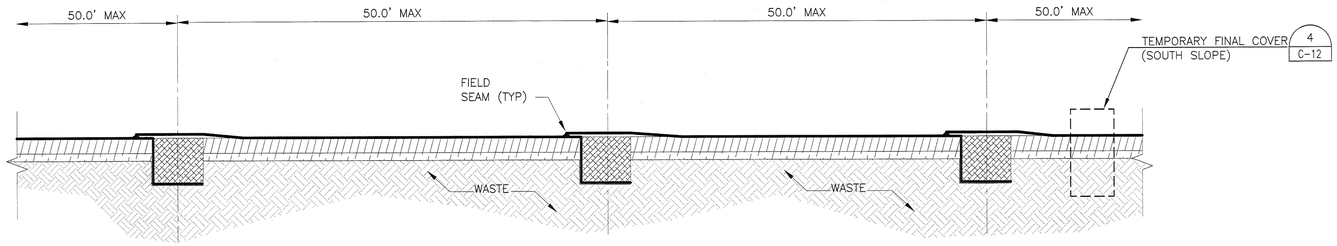

VERTICAL ANCHOR TRENCH SPACING

1 C-13 C-14

NOT TO SCALE

NOTES:

1. MAXIMUM CENTER TO CENTER DISTANCE OF VERTICAL ANCHOR TRENCHES SHALL NOT EXCEED 50 FT. ON 3:1 SIDESLOPES. HORIZONTAL ANCHOR TRENCHES SHOWN IN THE 2:1 SIDESLOPES SHALL NOT EXCEED 25 FT IN THE UPPER 1/3 OF SIDESLOPE AND 32 FT BELOW THE UPPER 1/3 OF THE SIDESLOPE.
2. THE CENTER TO CENTER DIMENSIONS SHOWN ARE CONCEPTUAL AND SUBJECT TO CHANGE BASED ON CONTRACTORS APPROVED PANEL LAYOUT.
3. DURING INSTALLATION OF TEMPORARY FINAL COVER (INCLUDING HORIZONTAL AND VERTICAL TRENCHES) THE CONTRACTOR SHALL MINIMIZE THE AMOUNT OF OPEN TRENCHES FOR ODOR AND STORMWATER CONTROL.
4. CONSTRUCTION ACTIVITIES SHALL BE SEQUENCED TO ALLOW GEOMEMBRANE TO BE PLACED IN THE ANCHOR TRENCH IMMEDIATELY FOLLOWING THE EXCAVATION OF THE ANCHOR TRENCH.
5. AS SOON AS CONSTRUCTION QUALITY ASSURANCE (CQA) PERSONNEL HAVE APPROVED THE DIMENSIONS, ALL OPEN TRENCHES SHALL BE BACKFILLED WITH SOIL AT THE END OF THE DAY.
6. CONTRACTOR SHALL USE CLEAN BACKFILL FOR ANCHORS. ANY SOLID WASTE REMOVED DURING EXCAVATION MUST BE PROPERLY DISPOSED OF IN ADJACENT ACTIVE LANDFILL CELL.
7. WEDGE WELD END OF GEOMEMBRANE PANEL TO BEGINNING OF NEW GEOMEMBRANE PANEL AND CONTINUE DOWNSLOPE. FLAP OF WEDGE WELD TO BE ON TOP IN THE DOWNSLOPE DIRECTION.
8. WELDS CONNECTING DOWNSLOPE SHEETS SHALL BE DOUBLE WEDGE WELDS, AND SHALL HAVE A MINIMUM 10 FT. VERTICAL OFFSET BETWEEN ADJACENT PANEL WELDS.
9. HOT ARC WELDS SHALL BE USED ONLY WHEN WEDGE WELDS ARE NOT FEASIBLE.
10. SEE SHEET 00C-13 FOR PLACEMENT OF TYPE 1, 2, AND 3 ANCHOR TRENCHES FOR VERTICAL ANCHOR TRENCHES.

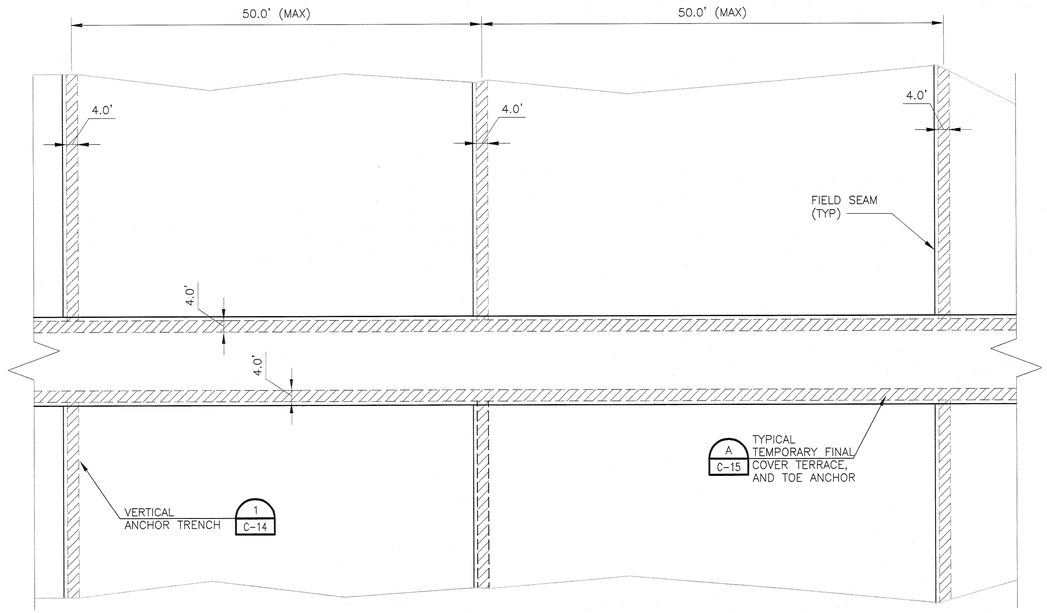

TYPICAL ANCHORING PLAN

2 C-14

NOT TO SCALE

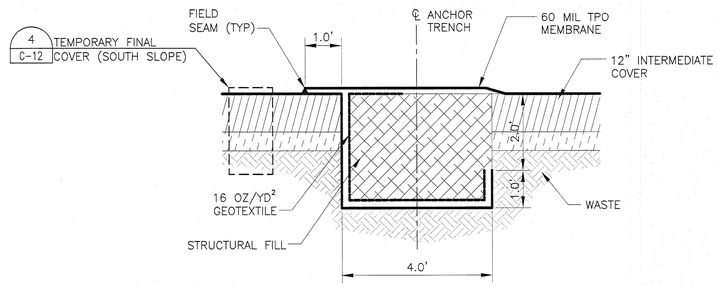

ANCHOR TRENCH (TYPE 1) – 3–FT DEPTH

3 C-13 C-15 C-16 C-17 C-18

NOT TO SCALE

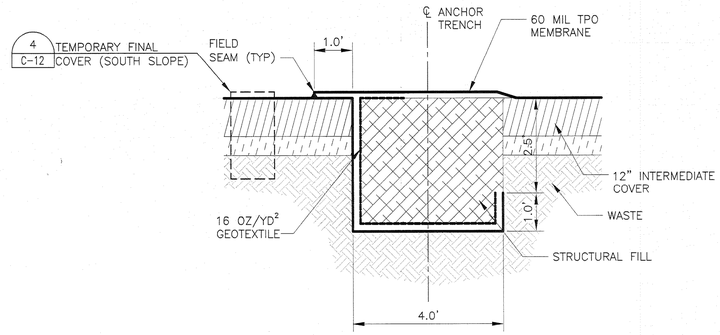

ANCHOR TRENCH (TYPE 2) – 3.5–FT DEPTH

4 C-13

NOT TO SCALE

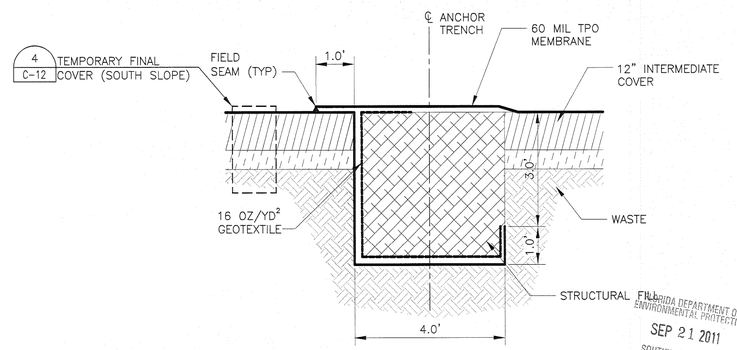

ANCHOR TRENCH (TYPE 3) – 4–FT DEPTH

5 C-13 C-16

NOT TO SCALE

FLORIDA DEPARTMENT OF ENVIRONMENTAL PROTECTION
SEP 21 2011
SOUTHWEST DISTRICT TAMPA

HDR Engineering, Inc.
2621 Cattlemen Rd., Ste. 106
Sarasota, Fl 34232-6212
(941) 342-2700
CA00004213

ISSUE	DATE	DESCRIPTION
0	10/2011	ISSUED FOR CONSTRUCTION

PROJECT MANAGER	R. SIEMERING
REVIEWED BY	M. ROBERTS
CIVIL DESIGN	K. PERERA
DRAWN BY	L. KARSHNER
PROJECT NUMBER	00096–130530–005

THOMAS M. YANOSCHAK, P. E.
CERTIFICATE NO. 44200

SARASOTA COUNTY

Central County Solid Waste Disposal Complex

PHASE I CLASS I LANDFILL CLOSURE AND LANDFILL GAS COLLECTION SYSTEM CONSTRUCTION DRAWINGS

SARASOTA COUNTY FLORIDA

PHASE I TEMPORARY FINAL COVER ANCHOR TRENCH SECTIONS AND DETAILS

0 1" 2"

FILENAME	00D–06.DWG
SCALE	AS SHOWN

SHEET C-14

c:\pwwork\rgilpin\d0331629\700D-06.dwg, Plot, 9/16/2011 10:56:54 AM, Brad.John

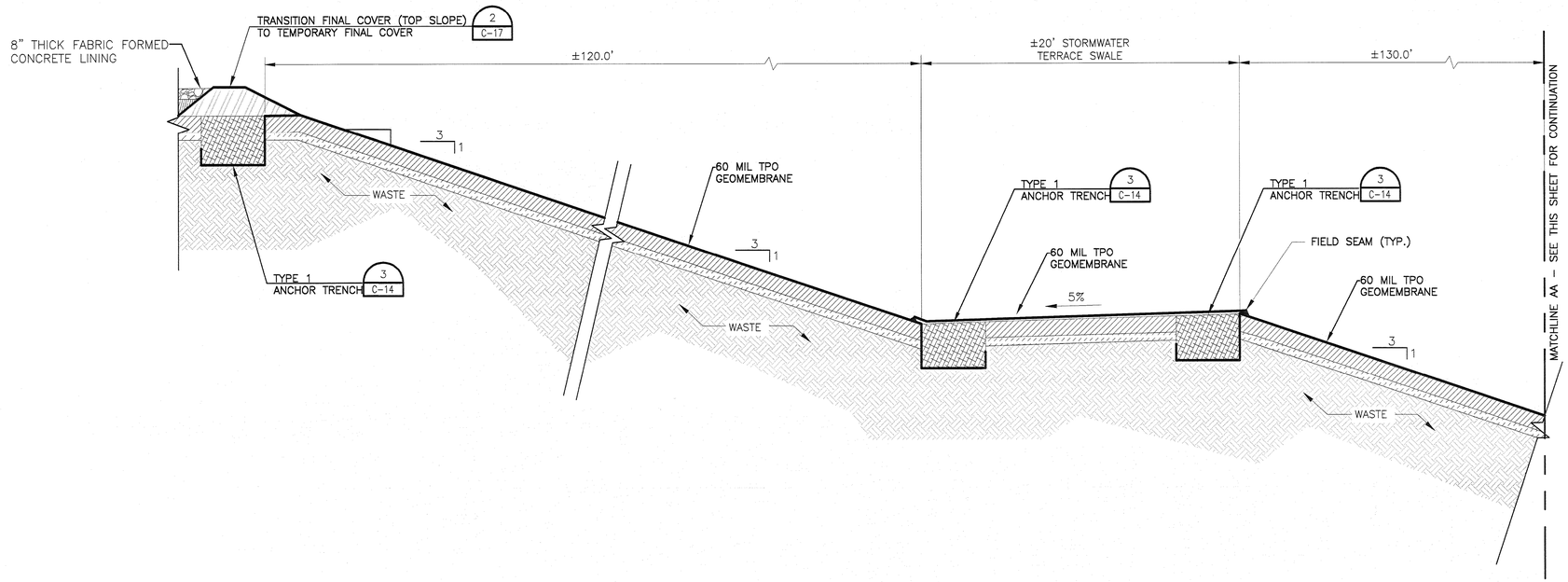

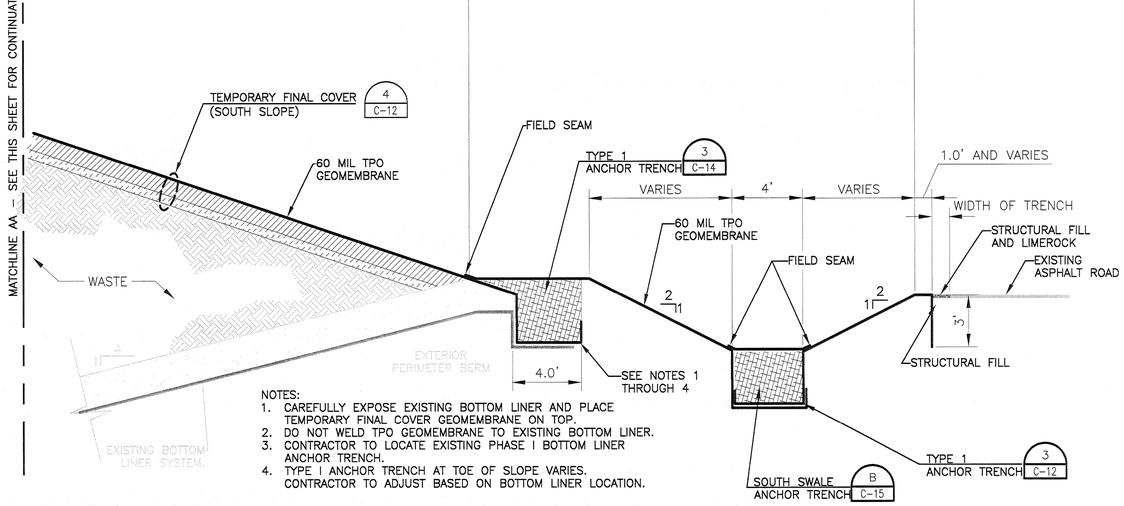

NOTES:
1. CAREFULLY EXPOSE EXISTING BOTTOM LINER AND PLACE TEMPORARY FINAL COVER GEOMEMBRANE ON TOP.
2. DO NOT WELD TPO GEOMEMBRANE TO EXISTING BOTTOM LINER.
3. CONTRACTOR TO LOCATE EXISTING PHASE I BOTTOM LINER ANCHOR TRENCH.
4. TYPE I ANCHOR TRENCH AT TOE OF SLOPE VARIES. CONTRACTOR TO ADJUST BASED ON BOTTOM LINER LOCATION.

TYPICAL TEMPORARY FINAL COVER TERRACE AND TOE ANCHOR

NOT TO SCALE

A C-13

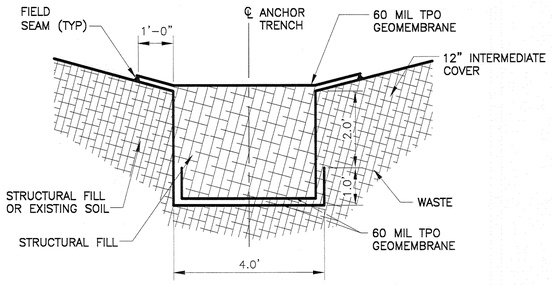

SOUTH SWALE ANCHOR TRENCH

NOT TO SCALE

B C-15 C-16

FLORIDA DEPARTMENT OF ENVIRONMENTAL PROTECTION
SEP 21 2011
SOUTHWEST DISTRICT TAMPA

HDR
HDR Engineering, Inc.
2621 Cattlemen Rd., Ste. 106
Sarasota, Fl 34232-6212
(941) 342-2700
CA00004213

ISSUE	DATE	DESCRIPTION
0	10/2011	ISSUED FOR CONSTRUCTION

PROJECT MANAGER	R. SIEMERING
REVIEWED BY	M. ROBERTS
CIVIL DESIGN	K. PERERA
DRAWN BY	L. KARSHNER
PROJECT NUMBER	00096-130530-005

THOMAS M. YANOSCHAK, P. E.
CERTIFICATE NO. 44200

SARASOTA COUNTY

Central County Solid Waste Disposal Complex

PHASE I CLASS I LANDFILL CLOSURE AND LANDFILL GAS COLLECTION SYSTEM CONSTRUCTION DRAWINGS

SARASOTA COUNTY FLORIDA

PHASE I TEMPORARY FINAL COVER ANCHOR TRENCH SECTIONS AND DETAILS

0 1" 2"

FILENAME	00D-07.DWG
SCALE	AS SHOWN

SHEET C-15

c:\pwworking\tpa\d0313\i2979\00D-07.dwg, Plot, 9/16/2011 10:57:04 AM, BradJohn

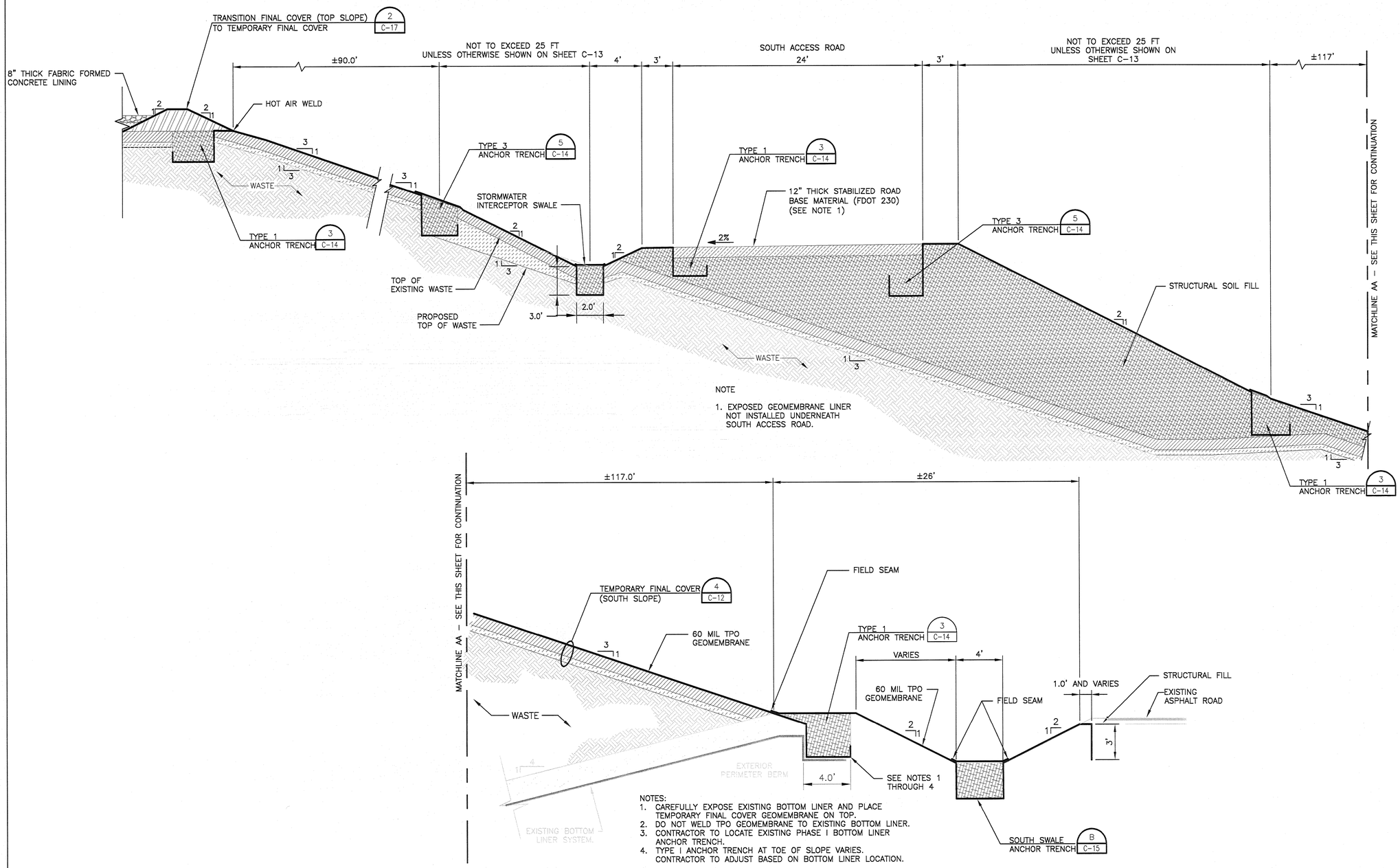

TYPICAL TEMPORARY FINAL COVER ALONG SOUTH ROAD SIDE SLOPE

A C-13

N.T.S.

FLORIDA DEPARTMENT OF ENVIRONMENTAL PROTECTION
SEP 21 2011
SOUTHWEST DISTRICT TAMPA

HDR Engineering, Inc.
2621 Cattlemen Rd., Ste. 106
Sarasota, Fl 34232-6212
(941) 342-2700
CA00004213

ISSUE	DATE	DESCRIPTION
0	10/2011	ISSUED FOR CONSTRUCTION

PROJECT MANAGER	R. SIEMERING
REVIEWED BY	M. ROBERTS
CIVIL DESIGN	K. PERERA
DRAWN BY	L. KARSHNER
PROJECT NUMBER	00096-130530-005

THOMAS M. YANOSCHAK, P. E.
CERTIFICATE NO. 44200

SARASOTA COUNTY

Central County Solid Waste Disposal Complex

PHASE I CLASS I LANDFILL CLOSURE AND LANDFILL GAS COLLECTION SYSTEM CONSTRUCTION DRAWINGS

SARASOTA COUNTY FLORIDA

PHASE I TEMPORARY FINAL COVER ANCHOR TRENCH SECTIONS AND DETAILS

0 1" 2"

FILENAME	00D-08.DWG
SCALE	AS SHOWN

SHEET C-16

C:\pwworking\tampa\d0318297000-08.dwg, Plot: 9/16/2011 10:57:08 AM, BradJohn

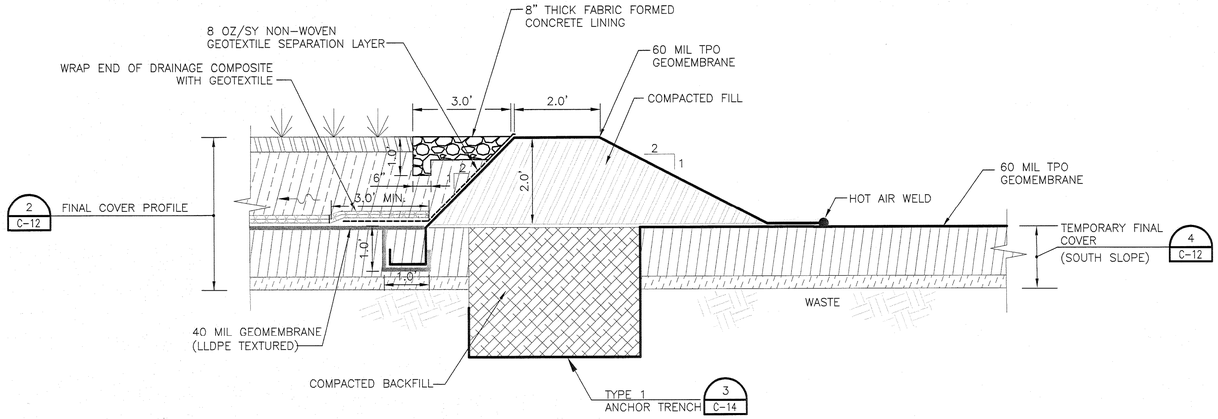

TRANSITION FINAL COVER (SIDESLOPE) TO TEMPORARY FINAL COVER

NOT TO SCALE

1 C-05 C-13

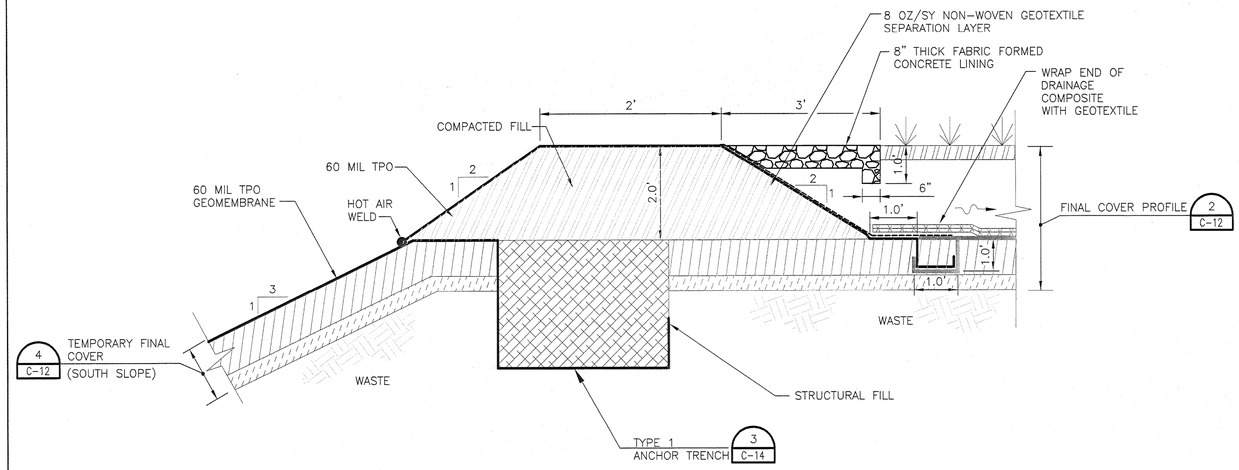

TRANSITION FINAL COVER (TOPSLOPE) TO TEMPORARY FINAL COVER

NOT TO SCALE

2 C-05 C-13 C-15

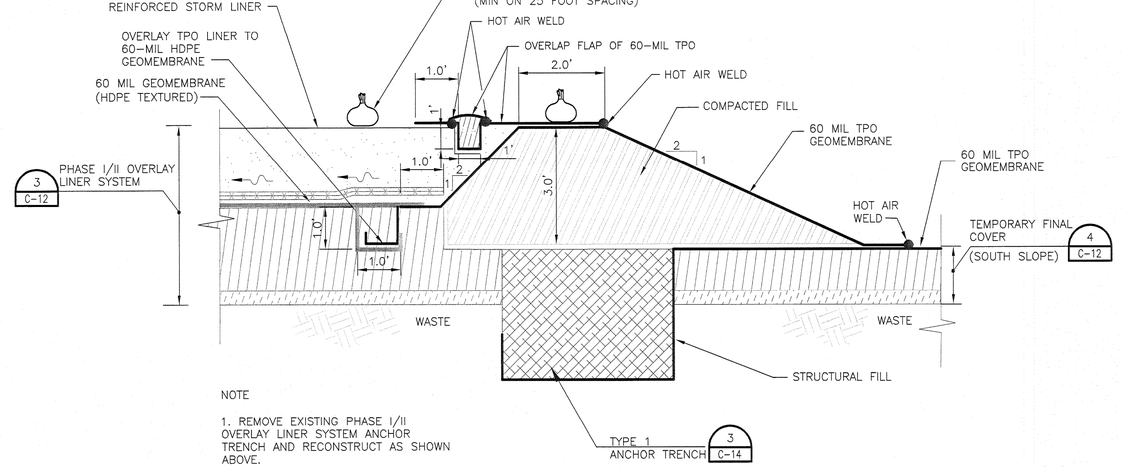

NOTE

1. REMOVE EXISTING PHASE I/II OVERLAY LINER SYSTEM ANCHOR TRENCH AND RECONSTRUCT AS SHOWN ABOVE.

TRANSITION PHASE I/II OVERLAY LINER TO TEMPORARY FINAL COVER

NOT TO SCALE

3 C-05 C-13

FLORIDA DEPARTMENT OF ENVIRONMENTAL PROTECTION
SEP 21 2011
SOUTHWEST DISTRICT TAMPA

HDR

HDR Engineering, Inc.
2621 Cattlemen Rd., Ste. 106
Sarasota, Fl 34232-6212
(941) 342-2700
CA00004213

ISSUE	DATE	DESCRIPTION
0	10/2011	ISSUED FOR CONSTRUCTION

PROJECT MANAGER	R. SIEMERING
REVIEWED BY	M. ROBERTS
CIVIL DESIGN	K. PERERA
DRAWN BY	L. KARSHNER
PROJECT NUMBER	00096-130530-005

THOMAS M. YANOSCHAK, P. E.
CERTIFICATE NO. 44200

SARASOTA COUNTY

Central County Solid Waste Disposal Complex
PHASE I CLASS I LANDFILL CLOSURE AND LANDFILL GAS COLLECTION SYSTEM CONSTRUCTION DRAWINGS

SARASOTA COUNTY FLORIDA

PHASE I TEMPORARY FINAL COVER CLOSURE DETAILS

0 1" 2"

FILENAME	00D-09.DWG
SCALE	AS SHOWN

SHEET C-17

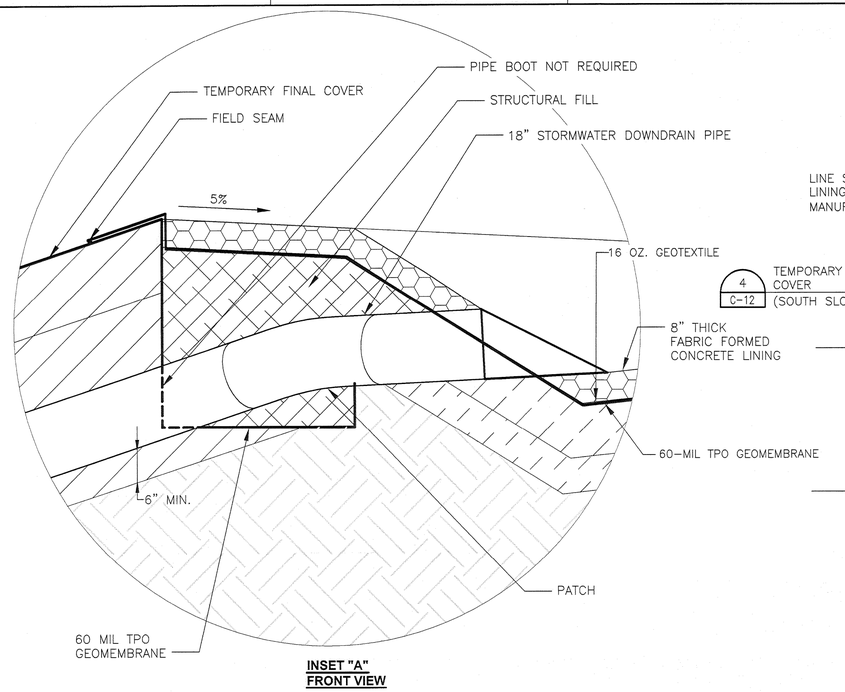

INSET "A" FRONT VIEW

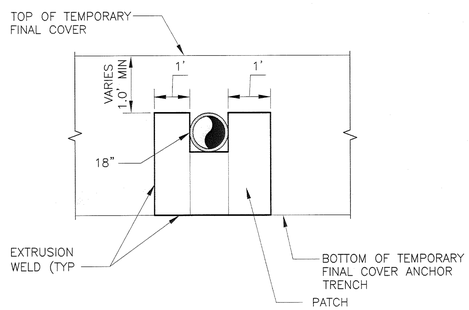

SIDE

NOTES:

1. CONTRACTOR TO USE CAUTION WHEN EXCAVATING AROUND EXISTING UNDERGROUND PIPING SYSTEM.
2. CUT GEOMEMBRANE AROUND EXISTING PIPE.
3. PLACE GEOMEMBRANE PATCH AROUND PIPE PENETRATION, OVERLAP MIN. 1' ON EACH SIDE AND EXTRUSION WELD ALL SEAMS.

TYPICAL TEMPORARY FINAL COVER ANCHOR TRENCH PENETRATION DETAIL

NOT TO SCALE — 2 / C-18 / C-19

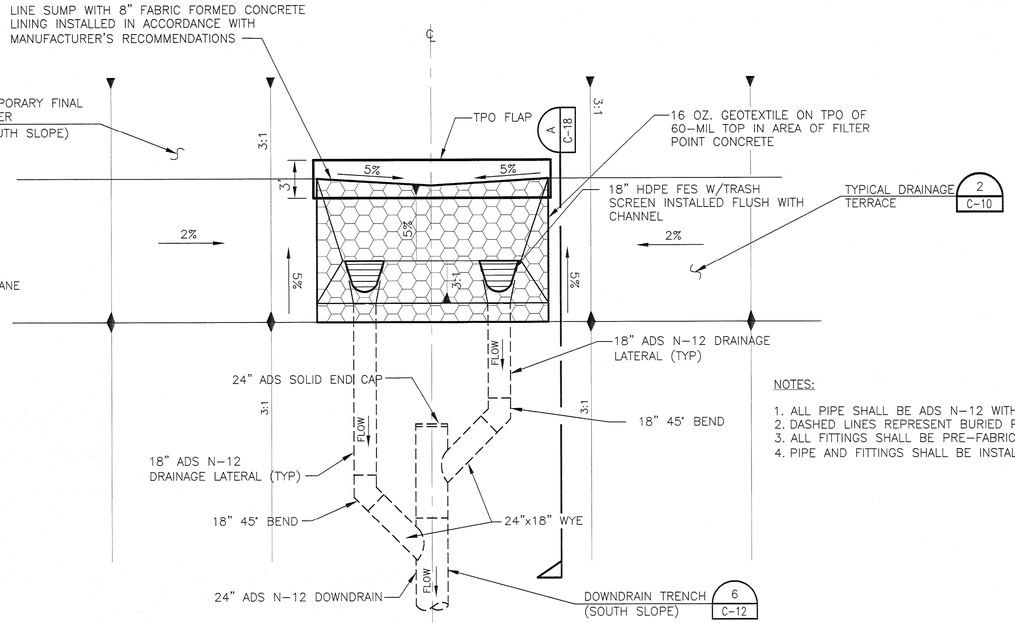

PLAN VIEW

NOTES:

1. ALL PIPE SHALL BE ADS N-12 WITH WATER TIGHT JOINTS.
2. DASHED LINES REPRESENT BURIED PIPE.
3. ALL FITTINGS SHALL BE PRE-FABRICATED.
4. PIPE AND FITTINGS SHALL BE INSTALLED TO MANUFACTURER'S RECOMMENDATIONS.

TERRACE/DOWNDRAIN INTERSECTION (SOUTH SLOPE)

NOT TO SCALE — 1 / C-05 / C-13

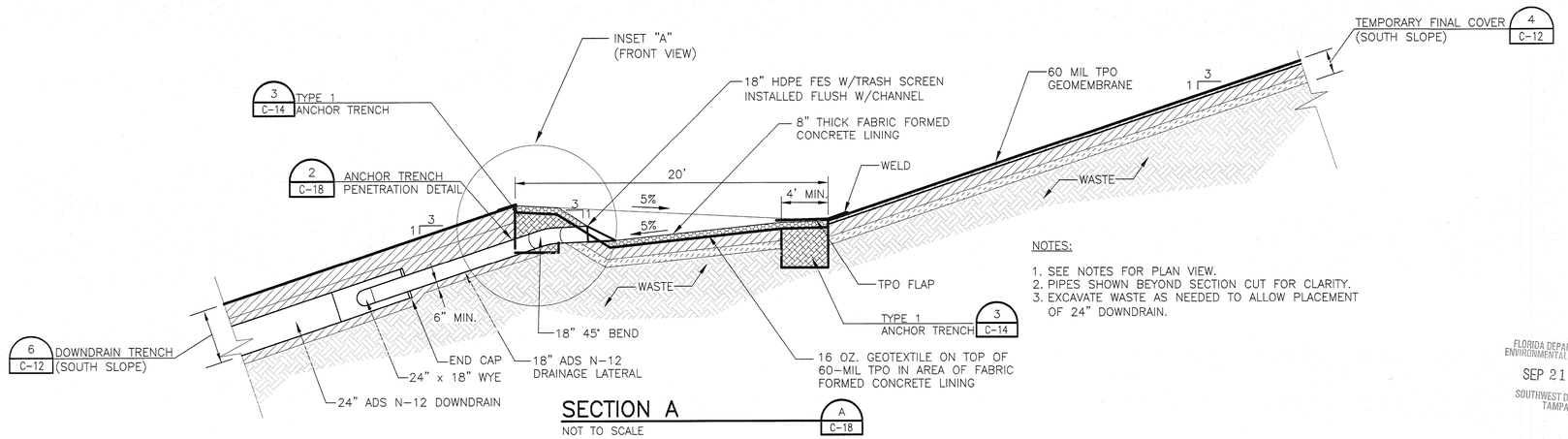

NOTES:

1. SEE NOTES FOR PLAN VIEW.
2. PIPES SHOWN BEYOND SECTION CUT FOR CLARITY.
3. EXCAVATE WASTE AS NEEDED TO ALLOW PLACEMENT OF 24" DOWNDRAIN.

SECTION A

NOT TO SCALE — A / C-18

FLORIDA DEPARTMENT OF ENVIRONMENTAL PROTECTION
SEP 21 2011
SOUTHWEST DISTRICT TAMPA

HDR Engineering, Inc.
2621 Cattlemen Rd., Ste. 106
Sarasota, Fl 34232-6212
(941) 342-2700
CA00004213

ISSUE	DATE	DESCRIPTION
0	10/2011	ISSUED FOR CONSTRUCTION

PROJECT MANAGER	R. SIEMERING
REVIEWED BY	M. ROBERTS
CIVIL DESIGN	K. PERERA
DRAWN BY	L. KARSHNER
PROJECT NUMBER	00096-130530-005

THOMAS M. YANOSCHAK, P. E.
CERTIFICATE NO. 44200

SARASOTA COUNTY

Central County Solid Waste Disposal Complex

PHASE I CLASS I LANDFILL CLOSURE AND LANDFILL GAS COLLECTION SYSTEM CONSTRUCTION DRAWINGS

SARASOTA COUNTY FLORIDA

PHASE I TEMPORARY FINAL COVER CLOSURE DETAILS

0 1" 2"

FILENAME	00D-10.DWG
SCALE	AS SHOWN

SHEET C-18

c:\pwworking\tamd051\d0378300\D-10.dwg, Plot, 9/16/2011 10:57:16 AM, BradJohn

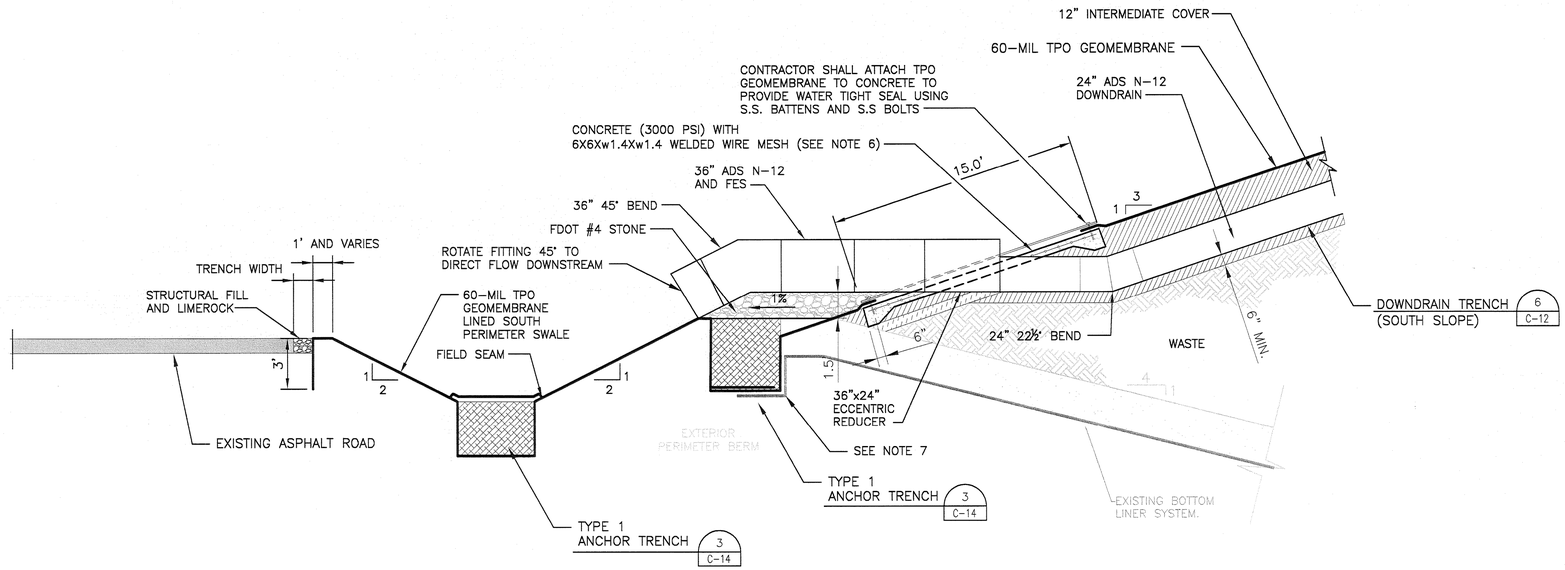

NOTES:

1. ALL PIPE SHALL BE ADS N-12 WITH WATER TIGHT JOINTS OR EQUAL.
2. ALL PIPE FITTINGS SHALL BE PREFABRICATED AND SHALL BE INSTALLED PER MANUFACTURER'S RECOMMENDATIONS.
3. CAREFULLY EXPOSE EXISTING BOTTOM LINER AND PLACE TPO GEOMEMBRANE ON TOP.
4. DO NOT WELD TPO GEOMEMBRANE TO EXISTING BOTTOM LINER.
5. ANNULAR SPACE BETWEEN CONCRETE AND PIPE SHALL BE FILLED WITH LINK SEAL OR APPROVED EQUAL.
6. CONCRETE PAD SHALL BE LENGTH SHOWN AND WIDTH BASED ON FDOT INDEX 273 FOR MITERED END SECTION FOR 36" PIPE.
7. CONTRACTOR TO LOCATE EXISTING PHASE I BOTTOM LINER ANCHOR TRENCH.

STORMWATER DOWNDRAIN DISCHARGE (SOUTH SLOPE) 1 C-13

NOT TO SCALE

FLORIDA DEPARTMENT OF ENVIRONMENTAL PROTECTION
SEP 21 2011
SOUTHWEST DISTRICT TAMPA

HDR
HDR Engineering, Inc.
2621 Cattlemen Rd., Ste. 106
Sarasota, Fl 34232-6212
(941) 342-2700
CA00004213

ISSUE	DATE	DESCRIPTION
0	10/2011	ISSUED FOR CONSTRUCTION

PROJECT MANAGER	R. SIEMERING
REVIEWED BY	M. ROBERTS
CIVIL DESIGN	K. PERERA
DRAWN BY	L. KARSHNER
PROJECT NUMBER	00096-130530-005

THOMAS M. YANOSCHAK, P. E.
CERTIFICATE NO. 44200

SARASOTA COUNTY

Central County Solid Waste Disposal Complex

PHASE I CLASS I LANDFILL CLOSURE AND LANDFILL GAS COLLECTION SYSTEM CONSTRUCTION DRAWINGS

SARASOTA COUNTY FLORIDA

PHASE I TEMPORARY FINAL COVER CLOSURE DETAILS

0 1" 2"

FILENAME	00D-11.DWG
SCALE	AS SHOWN

SHEET C-19

c:\pwworking\tpa\d0318297900-11.DWG, Plot, 9/16/2011 10:57:23 AM, BradJohn

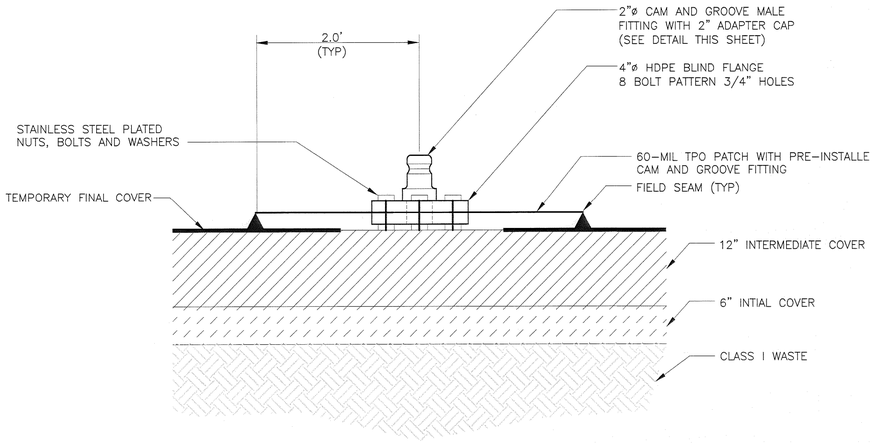

EMERGENCY GAS VENT

NOT TO SCALE

1 / C-13

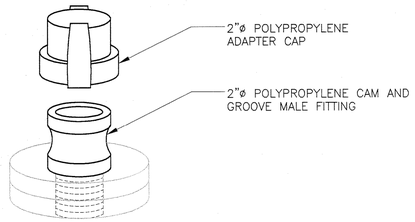

CAM AND GROOVE FITTING DETAIL

NOT TO SCALE

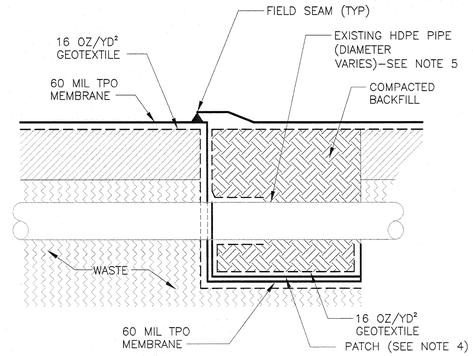

SIDE

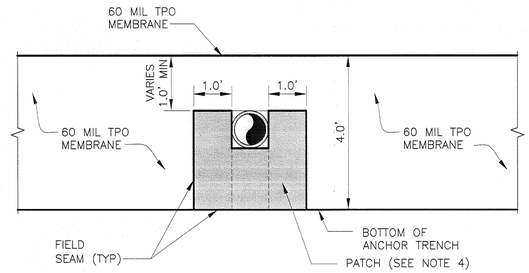

FRONT

NOTES:

1. CONTRACTOR TO USE CAUTION WHEN EXCAVATING AROUND EXISTING UNDERGROUND PIPING SYSTEM.
2. CUT GEOMEMBRANE AROUND EXISTING PIPE.
3. PLACE GEOMEMBRANE PATCH AROUND PIPE PENETRATION, OVERLAP MIN 1' ON EACH SIDE AND FIELD SEAM AS SHOWN.
4. PATCH WILL CONSIST OF A 60 MIL TPO WELDED TO SEC AS SHOWN TO STRENGTHEN THE GEOMEMBRANE UNDERNEATH THE HEADER.
5. FOR LANDFILL GAS PIPING, PENETRATION WOULD BE REQUIRED FOR LATERAL OR HEADER, AIRLINE, AND FORCEMAIN, UP TO 3 PIPES AT EACH CROSSING.

LANDFILL GAS PIPE AND ANCHOR TRENCH PENETRATION

N.T.S.

3 / C-13

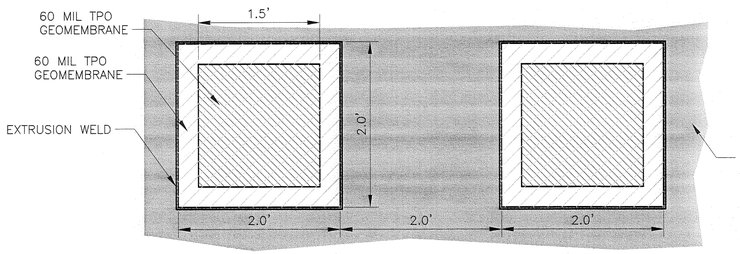

PLAN

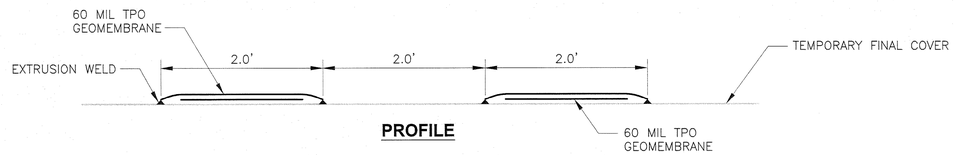

PROFILE

GEOMEMBRANE TEST PANELS

NOT TO SCALE

2 / C-13

FLORIDA DEPARTMENT OF ENVIRONMENTAL PROTECTION
SEP 21 2011
SOUTHWEST DISTRICT TAMPA

HDR
HDR Engineering, Inc.
2621 Cattlemen Rd., Ste. 105
Sarasota, Fl 34232-6212
(941) 342-2700
CA00004213

ISSUE	DATE	DESCRIPTION
0	10/2011	ISSUED FOR CONSTRUCTION

PROJECT MANAGER	R. SIEMERING
REVIEWED BY	M. ROBERTS
CIVIL DESIGN	K. PERERA
DRAWN BY	L. KARSHNER
PROJECT NUMBER	00096-130530-005

THOMAS M. YANOSCHAK, LICENSE No. 44200 * STATE OF FLORIDA * PROFESSIONAL ENGINEER

THOMAS M. YANOSCHAK, P. E.
CERTIFICATE NO. 44200

SARASOTA COUNTY

Central County Solid Waste Disposal Complex

PHASE I CLASS I LANDFILL CLOSURE AND LANDFILL GAS COLLECTION SYSTEM CONSTRUCTION DRAWINGS

SARASOTA COUNTY FLORIDA

PHASE I TEMPORARY FINAL COVER CLOSURE DETAILS

0 1" 2"

FILENAME	00D-12.DWG
SCALE	AS SHOWN

SHEET C-20

C:\pwworking\tpa\d0018237\00D-12.DWG, Plot, 9/16/2011 10:57:27 AM, BradJan

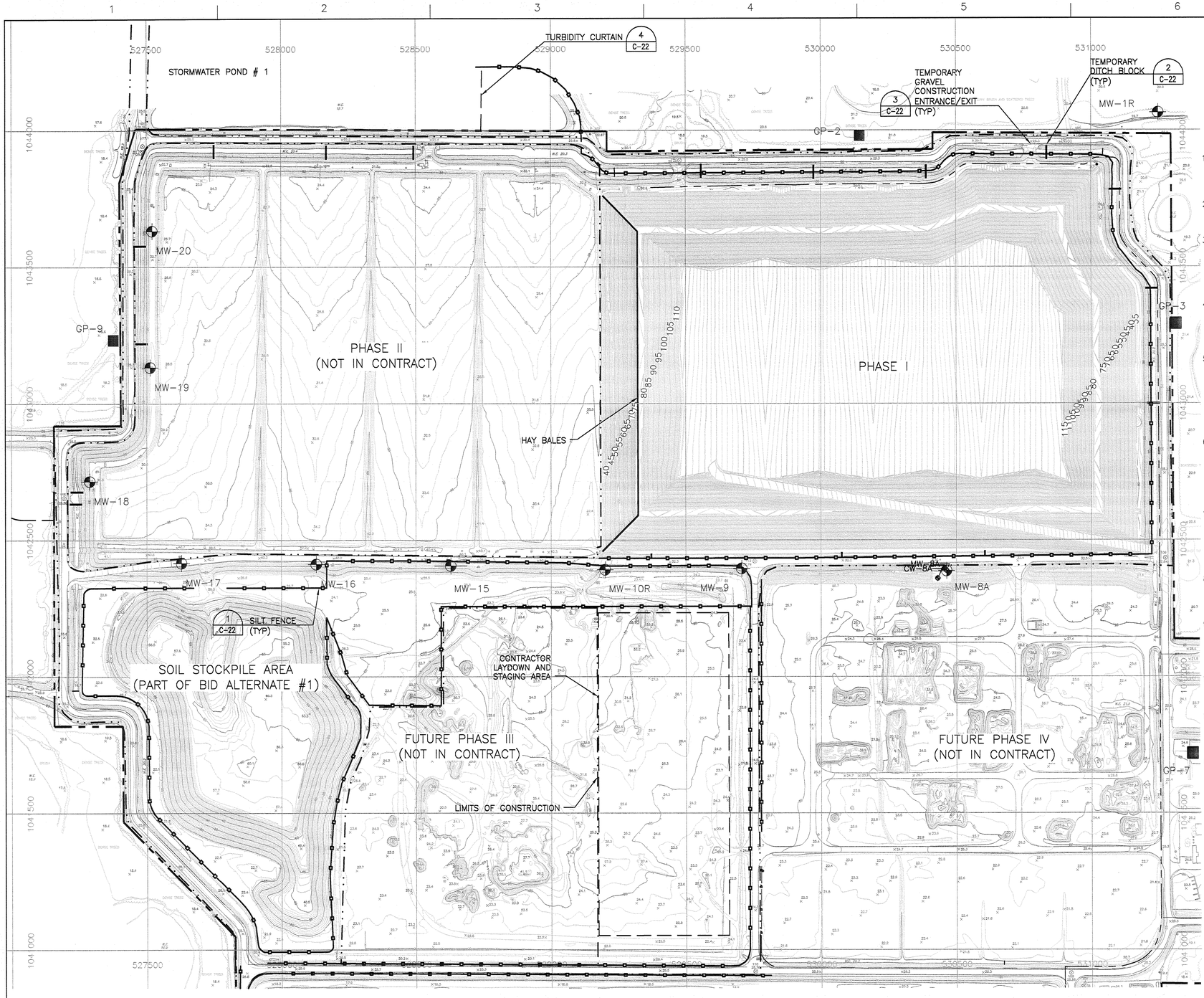

N

SEDIMENT AND EROSION CONTROL NOTES

1. SOIL EROSION AND SEDIMENTATION CONTROL MEASURES SHALL BE INSTALLED IN STRICT ACCORDANCE WITH STANDARDS IN THE CONSTRUCTION DOCUMENTS AND APPLICABLE ENVIRONMENTAL REGULATIONS.
2. ALL STORM WATER MANAGEMENT AND EROSION CONTROL MEASURES SHALL BE INSTALLED AND MADE OPERATIONAL PRIOR TO COMMENCEMENT OF EARTHWORK ACTIVITIES.
3. CONTRACTOR, OWNER AND ENGINEER WILL EVALUATE THE EXISTING CONDITION OF THE PERIMETER DRAINAGE CHANNELS AT START OF WORK. CONTRACTOR WILL BE RESPONSIBLE FOR MAINTAINING THE CHANNEL AND PONDS AND RESTORING THEM TO THE ORIGINAL CONDITION AT START OF WORK PRIOR TO DEMOBILIZING.
4. EROSION CONTROL MEASURES SHALL BE INSTALLED AND MAINTAINED TO THE SATISFACTION OF THE ENGINEER. FAILURE TO DO SO WILL RESULT IN STOPPAGE OF ALL OTHER WORK UNTIL SAID MEASURES COMPLY WITH ACCEPTABLE STANDARDS.
5. STABILIZATION MEASURES SHALL BE INITIATED AS SOON AS PRACTICABLE IN PORTIONS OF THE SITE WHERE CONSTRUCTION ACTIVITIES HAVE TEMPORARILY OR PERMANENTLY CEASED, BUT IN NO CASE MORE THAN 6 WEEKS AFTER THE CONSTRUCTION ACTIVITY IN THAT PORTION OF THE SITE HAS TEMPORARILY OR PERMANENTLY CEASED, UNLESS ACTIVITY IN THAT PORTION OF THE SITE WILL RESUME WITHIN 8 WEEKS.
6. ADDITIONAL TEMPORARY DITCHES AND/OR DIVERSIONS MAY BE REQUIRED TO PERFORM CONSTRUCTION. WHERE SUCH MEASURES ARE REQUIRED, THEY SHALL BE CONSTRUCTED SO AS TO DIRECT RUNOFF FROM DISTURBED AREAS TO APPROPRIATE TEMPORARY CONTROL FEATURES. NO ADDITIONAL PAYMENT SHALL BE MADE FOR ADDITIONAL MEASURES REQUIRED TO CONTROL EROSION.
7. ALL SEDIMENT CONTROL MEASURES SHALL BE INSPECTED AT LEAST ONCE EVERY SEVEN CALENDAR DAYS AND AFTER ANY STORM EVENT OF GREATER THAN ONE-HALF INCH OF PRECIPITATION DURING ANY 24 HOUR PERIOD. ALL SEDIMENT CONTROL FEATURES SHALL BE MAINTAINED UNTIL FINAL STABILIZATION HAS BEEN OBTAINED.
8. RESTORE AND STABILIZE ALL DISTURBED AREAS INCLUDING STOCKPILES AND STORAGE AREAS. PERFORM PERMANENT SEEDING IN ACCORDANCE WITH THE PROJECT SPECIFICATIONS.
9. BETWEEN SUBSTANTIAL COMPLETION AND FINAL COMPLETION OF THE WORK, THE CONTRACTOR SHALL REMOVE ALL SEDIMENT FROM THE EROSION CONTROL MEASURES THAT RECEIVED DRAINAGE DURING CONSTRUCTION UNLESS OTHERWISE DIRECTED BY OWNER.
10. ANY ERODED MATERIALS SHALL BE PROMPTLY REMOVED FROM ROADWAYS, DRIVES, WALKS, DITCHES, WATER COURSES, DRAINAGE CULVERTS, AND/OR STRUCTURES.
11. SILT FENCE, STRAW BALE BARRIERS, ETC. SHALL BE CHECKED REGULARLY FOR UNDERMINING OR DETERIORATION. CONTRACTOR SHALL REPLACE AS REQUIRED.
12. ALL TEMPORARY EROSION CONTROL AND SEDIMENT CONTROL MEASURES SHALL BE REMOVED UPON SATISFACTORY COMPLETION OF WORK AND SITE STABILIZATION.

GENERAL NOTES

1. TOPOGRAPHY WITHIN PHASES I THROUGH IV AREAS COMPILED BY KUCERA INTERNATIONAL, INC. OF WILLOUGHBY, OHIO USING PHOTOGRAMMETRIC METHODS FROM AERIAL PHOTOGRAPHS DATED JUNE 2, 2010.
2. APPROXIMATE LOCATION OF PHASE I LEACHATE FORCEMAIN OBTAINED FROM RECORD DRAWINGS BY CAMP DRESSER & McKEE, INC. DATED APRIL 1998. VERIFY LOCATION IN FIELD.
3. CONTOURS WITHIN PHASE I CLOSURE AREA REPRESENT PROPOSED TOP OF FINAL COVER.

LEGEND

- GP-1 GAS PROBE
- MW-10R GROUNDWATER MONITORING WELL
- VEGETATION
- WATERWAY
- SPECIAL EXCEPTION BOUNDARY
- EXISTING ROADWAY
- PHASE BOUNDARY
- SILT FENCE
- EXISTING PHASE I LEACHATE FORCEMAIN (SEE GENERAL NOTE 2)
- LIMITS OF CONSTRUCTION
- HAY BALES

FLORIDA DEPARTMENT OF ENVIRONMENTAL PROTECTION
SEP 21 2011
SOUTHWEST DISTRICT TAMPA

HDR Engineering, Inc.
2621 Cattlemen Rd., Ste. 106
Sarasota, Fl 34232-6212
(941) 342-2700
CA00004213

ISSUE	DATE	DESCRIPTION
0	10/2011	ISSUED FOR CONSTRUCTION

PROJECT MANAGER	R. SIEMERING
REVIEWED BY	J. TIMMONS, R. SIEMERING
CIVIL DESIGN	C. RESTREPO, T. YANOSCHACK
DRAWN BY	B. JOHNSON
PROJECT NUMBER	00096-130530-005

THOMAS M. YANOSCHAK, P. E.
CERTIFICATE NO. 44200

SARASOTA COUNTY

Central County Solid Waste Disposal Complex

PHASE I CLASS I LANDFILL CLOSURE AND LANDFILL GAS COLLECTION SYSTEM CONSTRUCTION DRAWINGS

SARASOTA COUNTY FLORIDA

SEDIMENTATION AND EROSION CONTROL PLAN

0 1" 2"

FILENAME	00D-13.DWG
SCALE	1"=200'

SHEET C-21

C:\pwworking\tpa\d0311829\700D-13.dwg, Plot, 9/16/2011 10:57:36 AM, BradJohn

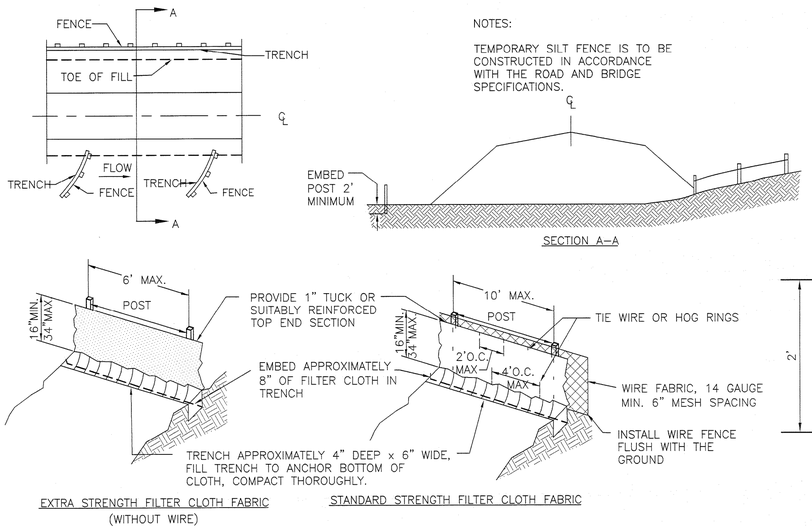

SILT FENCE

NOT TO SCALE

1 C-21

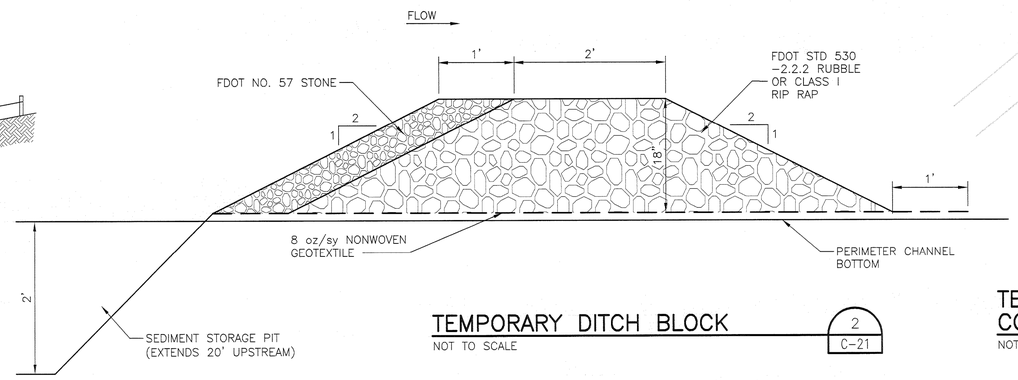

TEMPORARY DITCH BLOCK

NOT TO SCALE

2 C-21

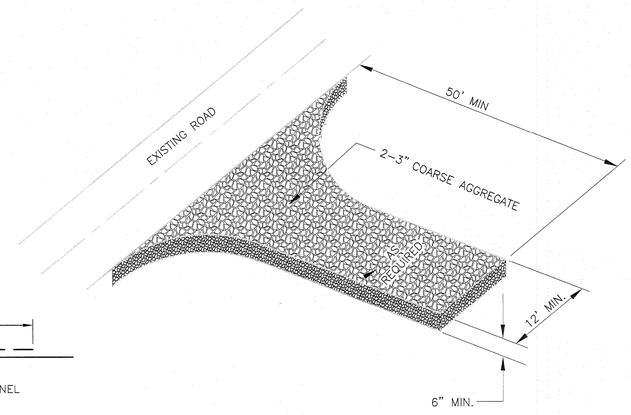

TEMPORARY GRAVEL CONSTRUCTION ENTRANCE/EXIT

NOT TO SCALE

3 C-21

CONSTRUCTION SPECIFICATIONS

MATERIALS

1. SYNTHETIC FILTER FABRIC SHALL BE A PERVIOUS SHEET OF POLYPROPYLENE, NYLON PLOYESTER, OR ETHYLENE YARN AND SHALL BE CERTIFIED BY THE MANUFACTURER OR SUPPLIER AS CONFORMING TO THE FOLLOWING REQUIREMENTS:

PHYSICAL PROPERTY	TEST	REQUIREMENTS
FILTERING EFFICIENCY	ASTM D–5141	75% (MIN)
TENSILE STRENGTH AT 20% (MAX.) ELONGATION*	VTM–52	EXTRA STRENGTH– 50 LBS./LIN. IN. (MIN.) STANDARD STRENGTH– 30 LBS./LIN. IN. (MIN.)
FLOW RATE	ASTM D–5141	0.3 GAL./SQ. FT./MIN.
ULTRAVIOLET RADIATION	ASTM D–4355 AND G–28	90% (MIN.)

* REQUIREMENTS REDUCED BY 50% AFTER 6 MONTHS OF INSTALLATION.

2. SYNTHETIC FILTER FABRIC SHALL CONTAIN ULTRAVIOLET RAY INHIBITORS AND STABILIZERS TO PROVIDE A MINIMUM OF 6 MONTHS OF EXPECTED USABLE CONSTRUCTION LIFE AT A TEMPERATURE RANGE OF 0 F TO 120 F.

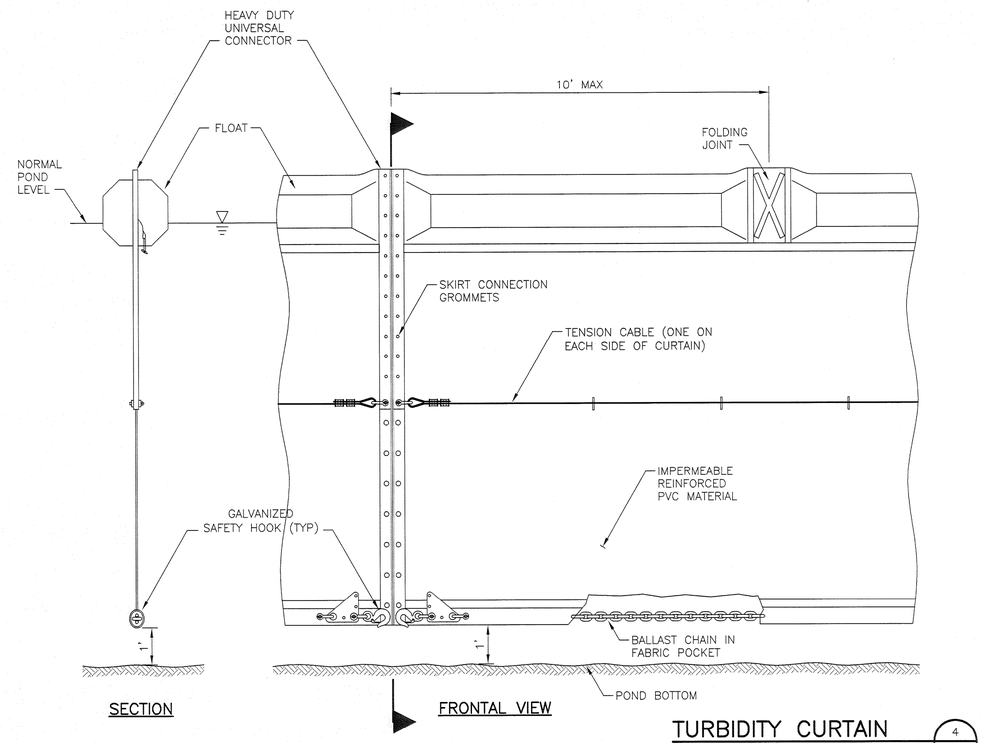

TURBIDITY CURTAIN

NOT TO SCALE

4 C-21

NOTES

1. CONTRACTOR SHALL INSPECT TURBIDITY CURTAIN ACCORDING TO INSPECTION SCHEDULE AND REPAIR ANY OBSERVED DAMAGE.
2. CONTRACTOR SHALL MEASURE SEDIMENT LEVELS IMMEDIATELY UPSTREAM OF CURTAIN AFTER ANY STORM EVENT OF GREATER THAN ONE–HALF INCH OF PRECIPITATION DURING ANY 24 HUOR PERIOD. SEDIMENT SHALL BE REMOVED OR CURTAIN MOVED FURTHER DOWNSTREAM IF SEDIMENT LEVEL REACHES BOTTOM OF CURTAIN.

TURBIDITY CURTAIN SPECIFICATIONS

CURTAIN MATERIAL: IMPERMEABLE REINFORCED PVC
MIN. TENSILE STRENGTH – 300 LB/IN
MIN. FABRIC WT. – 13 OZ./SY
TEAR STRENGTH – 80 LBS
TENSILE STRENGTH AFTER ABRASION – 200 LB/IN
RESISTANT TO MARINE GROWTH, ULTRA VIOLET LIGHT, AND MILDEW
ALL FABRIC SHALL BE HEAT SEALED.

FLOATS: SOLID, CLOSED–CELL, PLASTIC FOAM SEALED IN FABRIC POCKET. PROVIDE BUOYANT RATIO > 5
MAX. LENGTH 10'

BALLST CHAIN: NON–CORROSIVE
2 LB/IN WEIGHT

TENSION CABLE: GALVANIZED OR STAINLESS STEEL WIRE ROPE

MOORING: AS RECOMMENDED BY MANUFACTURER FOR PROPOSED APPLICATION

FLORIDA DEPARTMENT OF ENVIRONMENTAL PROTECTION
SEP 21 2011
SOUTHWEST DISTRICT TAMPA

HDR
HDR Engineering, Inc.
2521 Cattlemen Rd., Ste. 106
Sarasota, Fl 34232-6212
(941) 342-2700
CA00004213

ISSUE	DATE	DESCRIPTION
0	10/2011	ISSUED FOR CONSTRUCTION

PROJECT MANAGER	R. SIEMERING
REVIEWED BY	J. TIMMONS, R. SIEMERING
CIVIL DESIGN	C. RESTREPO, T. YANOSCHACK
DRAWN BY	B. JOHNSON
PROJECT NUMBER	00096–130530–005

THOMAS M. YANOSCHAK, P. E.
CERTIFICATE NO. 44200

SARASOTA COUNTY

Central County Solid Waste Disposal Complex

PHASE I CLASS I LANDFILL CLOSURE AND LANDFILL GAS COLLECTION SYSTEM CONSTRUCTION DRAWINGS

SARASOTA COUNTY FLORIDA

SEDIMENTATION AND EROSION CONTROL DETAILS

0 1" 2"

FILENAME	00D–14.DWG
SCALE	AS SHOWN

SHEET C-22

c:\pwworking\tpa\d03\825270\00D-14.dwg, Plot, 9/16/2011 10:57:43 AM, tbradohn

ENGINEERING SYMBOLOGY

HP	HIGH POINT
LP	LOW POINT
S-1	PROPOSED CONDENSATE SUMP
GW-49	PROPOSED LFG EXTRACTION WELL
AP	PROPOSED ACCESS POINT
KO	PROPOSED KNOCKOUT POT
U1	PROPOSED U-TRAP
	PROPOSED REMOTE WELLHEAD
	EXISTING LEACHATE SUMP
	EXISTING LEACHATE CLEANOUT
	PROPOSED AIRLINE/FORCE MAIN VALVE PIT
	PROPOSED HEADER ISOLATION VALVE PIT
	PROPOSED ECCENTRIC REDUCER
	PROPOSED STRAW BALE BARRIER
	PROPOSED TEMPORARY DITCH BLOCK
	EXISTING SOLAR FLARE
GP-7	EXISTING GAS PROBE
MW-14	EXISTING GROUNDWATER MONITORING WELL
	EXISTING WATER SUPPLY WELL
	PROPOSED ELECTRICAL HOUSING
	PROPOSED SILT FENCE
	PROPOSED 2" HDPE SDR 9 AIR SUPPLY LINE
	PROPOSED 4" HDPE SDR 9 CONDENSATE RETURN LINE
	PROPOSED 4" HDPE SDR 11 LATERAL
	PROPOSED 6" HDPE SDR 11 LATERAL
	PROPOSED 8" HDPE SDR 11 LATERAL
	PROPOSED HDPE SDR 17 HEADER
	EXISTING MAJOR/MINOR CONTOURS
40	PROPOSED MAJOR/MINOR CONTOURS
	PHASE LIMITS
	CELL LIMITS
	PROPERTY LINE
	EXISTING 6" LEACHATE FORCEMAIN
	PROPOSED CHAIN LINK FENCE
	EXISTING CHAIN LINK FENCE
	LIMITS OF CONSTRUCTION
UGE	PROPOSED UNDERGROUND ELECTRIC CONDUIT
UGT	PROPOSED UNDERGROUND TELEPHONE CONDUIT

DETAILS LEGEND OF PATTERNS

CLEAN BACKFILL	
PIPE BEDDING (DEFINED AS FIELD COMPACTED AND LEVELED BACKFILL OR EQ.)	
INTERMEDIATE COVER	
WASTE	
BENTONITE SEAL	
EXISTING GROUND	
STONE	
ONSITE SOIL	
CONCRETE	
ASPHALT	

NOTE
SYMBOLOGY IS REPRESENTATIVE OF MAJOR LANDFILL GAS COMPONENTS.

GENERAL SYMBOLOGY

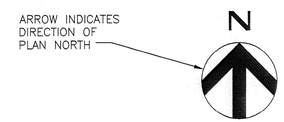

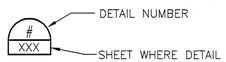

DETAIL MARKER

FOR REFERENCING DETAILS INCLUDED IN DRAWING SET.

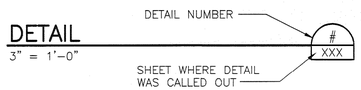

DETAIL TITLE

GENERAL NOTES

SURVEY AND MAP REPORT:

1. TOPOGRAPHY WITHIN PHASES I THROUGH IV AREAS COMPILED BY KUCERA INTERNATIONAL INC., OF WILLOUGHBY, OHIO USING PHOTOGRAMMETRIC METHODS FROM AERIAL PHOTOGRAPHS DATED JUNE 2010.

SPECIFIC NOTES:

1. 2 WEEKS PRIOR TO INITIATING WORK, THE CONTRACTOR WILL SUBMIT FOR APPROVAL A SCHEDULE TO THE ENGINEER, FOR COMPLETION OF THE PROJECT.
2. ALL EXCAVATION AND DRILLING WITHIN THE LANDFILL LIMITS SHALL CEASE PRIOR TO 3:00 PM. ALL WASTE EXCAVATED SHALL BE DELIVERED TO THE ACTIVE FACE OF THE LANDFILL DAILY BY 5:00 PM. WASTE NOT TAKEN TO WORKING FACE SHALL BE CONVERED OR CONTAINERIZED. CHANGES IN WORK HOURS ARE BASED UPON OWNER'S APPROVAL.
3. HOURS FOR CONSTRUCTION: 7:00 AM TO 7:00 PM MONDAY THRU SATURDAY, NO WORK ALLOWED ON SUNDAY UNLESS OTHERWISE APPROVED BY OWNER AND PERMIT WITH A MAXIMUM OF 60 HOURS PER WEEK.
4. CONTRACTOR MAY CONTAINERIZE WASTE AND TARP OVERNIGHT BASED ON OWNER APPROVAL.

EROSION AND SEDIMENT CONTROL:

1. CONTRACTOR WILL ADD EROSION AND SEDIMENT CONTROL AS NECESSARY TO PREVENT SEDIMENTATION AND DAMAGE TO ADJACENT AREAS AND AS DIRECTED BY THE OWNER'S REPRESENTATIVE.
2. CONTRACTOR WILL INSPECT AND REPAIR, AS NECESSARY, ANY EROSION AND SEDIMENT CONTROL DAILY AND FOLLOWING EACH RAIN.
3. EROSION AND SEDIMENT CONTROL WILL BE INSTALLED PRIOR TO CONSTRUCTION AND SHALL BE MAINTAINED UNTIL PERMANENT GROUND COVER IS ESTABLISHED.
4. CONTRACTOR IS RESPONSIBLE FOR MONITORING DOWNSTREAM CONDITIONS THROUGHOUT THE CONSTRUCTION PERIOD AND CLEARING ANY DEBRIS AND SEDIMENT RESULTING FROM CONSTRUCTION.
5. EROSION CONTROL FENCING MUST MEET THE REQUIREMENT OF THE DEPARTMENT OF TRANSPORTATION, STATE OF FLORIDA STANDARD SPECIFICATIONS. EROSION CONTROL MEASURES WILL BE MAINTAINED AT ALL TIMES.
6. ADDITIONAL EROSION AND SEDIMENT CONTROL MEASURES WILL BE INSTALLED IF DEEMED NECESSARY BY ON-SITE INSPECTION.

EARTHWORK:

1. EXCAVATION IS UNCLASSIFIED AND INCLUDES REMOVAL OF EARTH FILLS, RUBBLE, TRASH, AND OTHER MATERIALS ENCOUNTERED IN EXCAVATION AND GRADING OPERATIONS TO DEPTH AND EXTENT SHOWN ON DRAWINGS OR SPECIFIED. THE OWNER'S REPRESENTATIVE SHALL BE THE FINAL AUTHORITY AND SHALL MAKE THE FINAL DECISION DURING CONSTRUCTION AS TO THE DEPTH AND EXTENT TO WHICH MATERIALS MUST BE REMOVED AND REPLACED.
2. SURVEY BENCHMARKS, MONUMENTS AND OTHER REFERENCE POINTS WILL BE PROTECTED FROM DAMAGE AND DISPLACEMENT. IF DISTURBED OR DESTROYED, THEY WILL BE REPLACED AT THE CONTRACTOR'S EXPENSE.
3. CONTRACTOR SHALL KEEP DIRT, DUST, NOISE AND OTHER OBJECTIONABLE NUISANCES TO A MINIMUM.
4. ALL FILL AREAS ARE TO BE COMPACTED AS DEFINED IN THE SPECIFICATIONS AND DRAWINGS.
5. CUT AND FILL SLOPES FOR STRUCTURAL EMBANKMENTS SHALL NOT EXCEED 3 HORIZONTAL TO 1 VERTICAL.

UTILITIES:

1. THERE MAY BE OTHER UTILITIES NOT SHOWN ON THESE PLANS. THE ENGINEER ASSUMES NO RESPONSIBILITY FOR LOCATIONS SHOWN AND IT SHALL BE THE RESPONSIBILITY OF THE CONTRACTOR TO VERIFY THE LOCATIONS OF ALL UTILITIES WITHIN THE LIMITS OF THE WORK PRIOR TO CONSTRUCTION. ALL DAMAGE MADE TO EXISTING UTILITIES SHALL BE THE SOLE RESPONSIBILITY OF THE CONTRACTOR. THE CONTRACTOR SHALL NOTIFY ALL UTILITY COMPANIES IN THE AREA AT LEAST 72 HOURS PRIOR TO BEGINNING CONSTRUCTION. CALL FLORIDA SUNSHINE STATE ONE CALL CENTER AT 1-800-432-4770. ALL COORDINATION AND REQUIRED UTILITY COMPANY TEMPORARY PROTECTION SHALL BE AT THE CONTRACTOR'S EXPENSE. IT IS THE CONTRACTOR'S RESPONSIBILITY TO ENSURE UNINTERRUPTION OF SERVICE AND REPLACEMENT OF DAMAGED UTILITIES.

AS-BUILT SURVEY DATA:

1. CONTRACTOR SHALL BE RESPONSIBLE FOR MINIMIZING LANDFILL GAS EMISSIONS FROM SURVEY TUBES (E.G. SEAL TOP OF SURVEY TUBES).
2. THE CONTRACTOR SHALL PROVIDE SURVEY DATA TO THE ENGINEER SHOWING THE LANDFILL GAS SYSTEM HAS BEEN PROPERLY CONSTRUCTED AND MEETS THE MINIMUM SLOPES REQUIRED AS SHOWN ON THE DRAWINGS.
3. THE SURVEY DATA SUBMITTED TO THE ENGINEER SHALL BE GROUND SURFACE ELEVATIONS AND TOP OF PIPE ELEVATIONS AT 50 FOOT INTERVALS ON CENTER AND AT EACH FITTING, LATERAL CONNECTION, VALVE, BENDS AND OTHER SIGNIFICANT FEATURES
4. ALL REQUESTED SURVEY DATA MUST BE PROVIDED TO OWNER'S REPRESENTATIVE IN FLORIDA STATE PLANE COORDINATES AND BE PERFORMED BY A STATE OF FLORIDA CERTIFIED SURVEYOR.

GENERAL NOTES:

1. THE CONTRACTOR IS ADVISED THAT NO ACTIVITIES MAY INTERFERE, DISRUPT, BLOCK, OR OTHERWISE CONFLICT WITH LANDFILL OPERATIONS. IF CONFLICTS ARE ANTICIPATED THEY SHALL BE COORDINATED AND APPROVED BY THE OWNER AND ENGINEER PRIOR TO DISRUPTION.
2. PROJECT SITE IS A SOLID WASTE LANDFILL, AS SUCH, CONDITIONS ARE SUBJECT TO CHANGE WITH TIME. CONTROLS, IN PARTICULAR VERTICAL CONTROL, SHOULD BE EXPECTED (AND ANTICIPATED) TO VARY FROM THOSE SHOWN ON THESE DRAWINGS DUE TO ONGOING SUBSIDENCE RESULTING FROM REFUSE DECOMPOSITION. RELATIVE ELEVATION DIFFERENCES IN EXISTING AND PROPOSED ELEVATIONS SHOWN ON THE DRAWINGS SHALL BE ADJUSTED ACCORDINGLY. LOCATION OF STRUCTURES SHALL BE PLACED IN ACCORDANCE WITH HORIZONTAL CONTROLS. VERTICAL PLACEMENT OF STRUCTURES SHALL BE IN ACCORDANCE WITH CONSTRUCTION DOCUMENTS, OR AS APPROVED BY THE ENGINEER.
3. CONSTRUCTION OF LANDFILL GAS COLLECTION SYSTEM WILL INVOLVE REFUSE EXCAVATION. THE CONTRACTOR SHALL MAKE ALL SAFETY AND ENVIRONMENTAL PRECAUTIONS TO PROTECT ITS WORKERS AND SUBCONTRACTORS, AT NO ADDITIONAL COST TO THE OWNER. ALL EXCAVATED WASTES SHALL BE PLACED AT THE WORKING FACE. CONTRACTOR IS ADVISED THAT THE POTENTIAL FOR ENCOUNTERING ASBESTOS CONTAINING MATERIAL EXISTS. SHOULD SUSPECT ASBESTOS-CONTAINING MATERIAL BE ENCOUNTERED, IT SHALL BE MAINTAINED IN A MOIST CONDITION DURING THE REMOVAL AND TRANSFER PROCESS TO MINIMIZE/PREVENT EMISSIONS FROM SUCH. DISTURBED REFUSE (INCLUDING ANY SUSPECT ASBESTOS-CONTAINING MATERIAL) WILL BE TRANSPORTED TO THE WORKING FACE OF THE CENTRAL COUNTY SOLID WASTE DISPOSAL COMPLEX BY THE END OF EACH WORKING DAY FOR PROPER DISPOSAL AND BURIED WITH A MINIMUM OF SIX (6) INCHES OF SOIL COVER.
4. ANY AND ALL FINES IMPOSED ON THE OWNER BY ANY REGULATORY AGENCY DUE TO ACTIONS OF THE CONTRACTOR SHALL BE PAID BY THE CONTRACTOR.
5. INSPECTION: EXAMINE AREAS FOR CONDITIONS UNDER WHICH WORK IS TO BE PERFORMED. REPORT IN WRITING TO OWNER'S REPRESENTATIVE ALL CONDITIONS CONTRARY TO THOSE SHOWN ON THE DRAWINGS OR SPECIFIED HEREIN AND ALL OTHER CONDITIONS THAT WILL AFFECT SATISFACTORY EXECUTION OF WORK. DO NOT PROCEED WITH WORK UNTIL UNSATISFACTORY CONDITIONS HAVE BEEN CORRECTED. STARTING WORK CONSTITUTES ACCEPTANCE OF THE CONDITIONS UNDER WHICH WORK IS TO BE PERFORMED. AFTER SUCH ACCEPTANCE, THE CONTRACTOR SHALL, AT CONTRACTORS EXPENSE, BE RESPONSIBLE FOR CORRECTING ALL UNSATISFACTORY AND DEFECTIVE WORK RESULTING FROM SUCH UNSATISFACTORY CONDITIONS.
6. PROTECTIONS: INSTALL TEMPORARY BARRIERS, FENCES, BARRICADES, LIGHTS, WARNING SIGNS AND OTHER DEVICES NECESSARY TO PROTECT STRUCTURES, UTILITIES, LANDSCAPING, EXCAVATIONS, AND OTHER ITEMS AS NECESSARY. PROTECT SURVEY BENCHMARKS AND MONUMENTS FROM DISPLACEMENT.
7. ALL WORK SHALL BE PERFORMED IN A QUALITY WORKMANLIKE MANNER.
8. DEVIATIONS FROM THESE PLANS AND SPECIFICATIONS WITHOUT PRIOR WRITTEN CONSENT OF THE ENGINEER OR OWNER MAY CAUSE THE WORK TO BE UNACCEPTABLE AND WILL BE ADJUSTED OR REPAIRED AT THE CONTRACTOR'S EXPENSE.
9. THE CONTRACTOR SHALL OBTAIN AND PAY FOR ALL NECESSARY LICENSES AND PERMITS ASSOCIATED WITH THE CONSTRUCTION OF THIS PROJECT UNLESS NOTIFIED OTHERWISE IN WRITING BY THE OWNER.
10. LATERAL PIPING ALIGNMENTS ARE APPROXIMATE. CONTRACTOR TO FIELD VERIFY TO ASSURE REQUIRED SLOPE AND DIRECTION OF GAS AND CONDENSATE FLOW.
11. SUGGESTED INSTALLATION SEQUENCE: THE FOLLOWING INSTALLATION SEQUENCE HAS BEEN ASSUMED IN THE ENGINEER CALCULATIONS.
    - (A.) DRILL ALL VERTICAL WELLS, INSTALLING AND COMPLETING WELL COMPONENTS AS PROCEEDING.
    - (B.) TRENCH LATERAL PIPING FROM THE WELLS TO CONNECTION POINT IN THE ACTIVE GAS COLLECTION SYSTEM.
    - (C.) CONNECT ALL LATERALS TO ACTIVE GAS COLLECTION SYSTEM.
    - (D.) INSTALL FORCEMAIN AND AIR LINE PIPING
    - (E.) INSTALL PNEUMATIC PUMPS AT WELLS DESIGNATED BY ENGINEER.
    - (F.) COMPLETE WELLHEAD INSTALLATION AND PNEUMATIC PUMP CONNECTIONS.
12. PRIOR TO INSTALLATION OF GAS COLLECTION SYSTEM, ENGINEER TO BE PROVIDED WITH THE FINAL GRADING PLAN TO CONFIRM LAYOUT AND MINIMUM SLOPES.
13. ALL WORK SHALL HAVE A WARRANTY AS SPECIFIED IN THE CONTRACT DOCUMENTS.
14. ALL BORE HOLES THAT ARE NOT COMPLETED AT THE END OF THE DAY ARE TO BE COVERED WITH A METAL WELL COVER CAPABLE OF PREVENTING ANY PERSONS FROM FALLING INTO THE HOLE. THE HOLE MUST THEN BE COVERED WITH A PIECE OF PLYWOOD TO SUBSTANTIALLY COVER THE ENTIRE HOLE. SOIL MUST BE PLACED ON TOP OF THE PLYWOOD TO COMPLETELY COVER THE PLYWOOD TO FURTHER PREVENT GAS EMISSIONS. SUBSTITUTE SAFETY MEASURES MAY BE USED IF APPROVED BY ENGINEER.
15. ALL HDPE PIPES SHALL BE PRESSURE TESTED AFTER FUSION FOR LEAKS. THE STANDARD PRESSURE TEST SHALL BE 10 PSI FOR 1 HOUR WITH A MAXIMUM OF 5% LOSS.
16. CONTRACTOR SHALL BE RESPONSIBLE FOR THE REMOVAL OF ALL SURVEY TUBES AT THE END OF THE PROJECT, UNLESS INSTRUCTED OTHERWISE BY OWNER OR ENGINEER.
17. ACTUAL DIMENSIONS AND LOCATIONS MAY VARY BASED ON FIELD LOCATIONS.
18. TERMS "OWNER'S REPRESENTATIVE" AND "ENGINEER" ARE INTERCHANGEABLE.
19. CONTRACTOR TO PROVIDE SHOP DRAWINGS TO ENGINEER FOR APPROVAL.
20. THE CONTRACTOR IS ADVISED THAT THE LANDFILL CONTAINS A SYNTHETIC LINER AS PART OF THE SUBGRADE CONSTRUCTION. ALL COSTS ASSOCIATED WITH REPAIR RESULTING FROM DAMAGE TO THIS LINER SYSTEM SHALL BE THE SOLE RESPONSIBILITY OF THE CONTRACTOR. THESE COSTS SHALL INCLUDE, BUT ARE NOT LIMITED TO ENGINEER'S REVIEW, REPAIR OR REPLACEMENT BY A QUALIFIED LLDPE LINER INSTALLER, THIRD PARTY OBSERVATION, AND COUNTY REVIEW.
21. THE CONTRACTOR SHALL BE RESPONSIBLE FOR ALL ENGINEERING HOURS OVER THE 60 HOURS PER WEEK WORK SCHEDULE AT A RATE OF $100/HR.

FLORIDA DEPARTMENT OF ENVIRONMENTAL PROTECTION
SEP 21 2011
SOUTHWEST DISTRICT TAMPA

HDR Engineering, Inc.
2621 Cattlemen Rd., Ste. 106
Sarasota, Fl 34232-6212
(941) 342-2700
CA00004213

ISSUE	DATE	DESCRIPTION
0	10/2011	ISSUED FOR CONSTRUCTION

PROJECT MANAGER	R. SIEMERING
REVIEWED BY	C. KOENIG
CIVIL DESIGN	C. RESTREPO, T. YANOSCHACK
DRAWN BY	B. JOHNSON
PROJECT NUMBER	00096-130530-005

CLIFFORD G. KOENIG LICENSE No. 64078 STATE OF FLORIDA PROFESSIONAL ENGINEER
9-19-2011
CLIFFORD G. KOENIG, P. E.
CERTIFICATE NO. 64078

SARASOTA COUNTY

Central County Solid Waste Disposal Complex
PHASE I CLASS I LANDFILL CLOSURE AND LANDFILL GAS COLLECTION SYSTEM CONSTRUCTION DRAWINGS

SARASOTA COUNTY FLORIDA

LANDFILL GAS GENERAL NOTES

0 1" 2"

FILENAME	00LFG-01.DWG
SCALE	AS SHOWN

SHEET LFG-01

c:\pwworking\tpa\d0318297\00LFG-01.dwg, Plot, 9/16/2011 11:42:11 AM, BradJohn

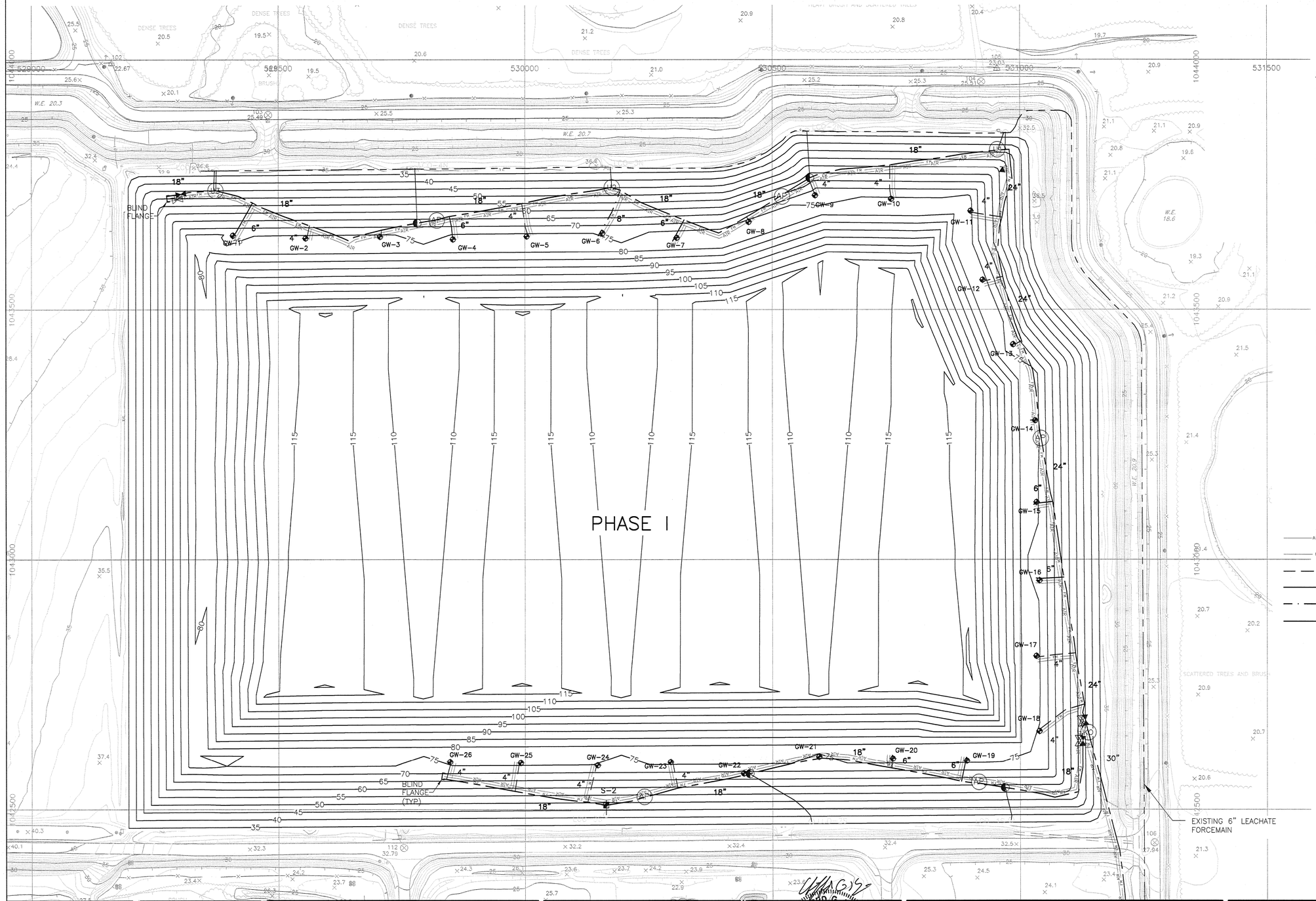

NOTES:

1. TOPOGRAPHY WITHIN PHASES I THROUGH IV WAS COMPILED BY KUCERA INTERNATIONAL INC. OF WILLOUGHBY, OHIO USING PHOTOGRAMMETRIC METHODS FROM AERIAL PHOTOGRAPHS DATED JUNE 2, 2010.
2. PROPOSED PHASE I FINAL GRADES DESIGNED BY HDR ENGINEERING, INC. TAMPA, FLORIDA.
3. CONTRACTOR TO PROVIDE A PRE-CONSTRUCTION SURVEY, PRIOR TO COMMENCING CONSTRUCTION ACTIVITIES, TO VERIFY EXISTING CONDITIONS.
4. LOCATION AND DENSITY OF LFG EXTRACTION SYSTEM ARE APPROXIMATE AND SUBJECT TO CHANGE BASED ON EXISTING CONDITIONS.
5. APPROXIMATE LOCATION OF PHASE I LEACHATE FORCEMAIN OBTAINED FROM RECORD DRAWINGS BY CAMP DRESSER & McKEE, INC. DATED APRIL 1998. VERIFY LOCATION IN FIELD.
6. BLIND FLANGE AT END OF SOUTH HEADER SHALL BE LOCATED 20 FEET OUTSIDE OF PHASE 2 LIMITS OF LINER. ACTUAL LOCATION TO BE DETERMINED AFTER PRE-CONSTRUCTION SURVEY.
7. ALL LEACHATE CLEANOUT CONNECTIONS SHALL HAVE A REMOTE WELLHEAD, NOT SHOWN FOR CLARITY.
8. AIR AND FORCEMAIN SHOWN OFFSET FOR CLARITY.
9. CONTRACTOR TO REMOVE EXISTING BOLLARDS AND STOCKPILE FOR REUSE AS DIRECTED BY OWNER AND ENGINEER.

S-1	CONDENSATE SUMP
GW-18	LFG EXTRACTION WELL
AP	ACCESS POINT
KO	KNOCKOUT POT
	REMOTE WELLHEAD
	EXISTING LEACHATE CLEANOUT
AIR	2" HDPE SDR 9 AIR SUPPLY LINE
FM	4" HDPE SDR 9 CONDENSATE RETURN LINE
	4" HDPE SDR 11 LATERAL
	6" HDPE SDR 11 LATERAL
	8" HDPE SDR 11 LATERAL
	HDPE SDR 17 HEADER

FLORIDA DEPARTMENT OF ENVIRONMENTAL PROTECTION
SEP 21 2011
SOUTHWEST DISTRICT TAMPA

HDR
HDR Engineering, Inc.
2621 Cattlemen Rd., Ste. 106
Sarasota, Fl 34232-6212
(941) 342-2700
CA00004213

ISSUE	DATE	DESCRIPTION
0	10/2011	ISSUED FOR CONSTRUCTION

PROJECT MANAGER	R. SIEMERING
REVIEWED BY	C. KOENIG
CIVIL DESIGN	C. RESTREPO, T. YANOSCHACK
DRAWN BY	B. JOHNSON
PROJECT NUMBER	00096-130530-005

CLIFFORD G. KOENIG LICENSE No. 64078 STATE OF FLORIDA PROFESSIONAL ENGINEER
9-2011

CLIFFORD G. KOENIG, P. E.
CERTIFICATE NO. 64078

SARASOTA COUNTY

Central County Solid Waste Disposal Complex

PHASE I CLASS I LANDFILL CLOSURE AND LANDFILL GAS COLLECTION SYSTEM CONSTRUCTION DRAWINGS

SARASOTA COUNTY FLORIDA

PHASE I GAS SYSTEM LAYOUT - EXISTING CONDITIONS

0 1" 2"

FILENAME	00C-08.DWG
SCALE	1"=100'

SHEET LFG-02

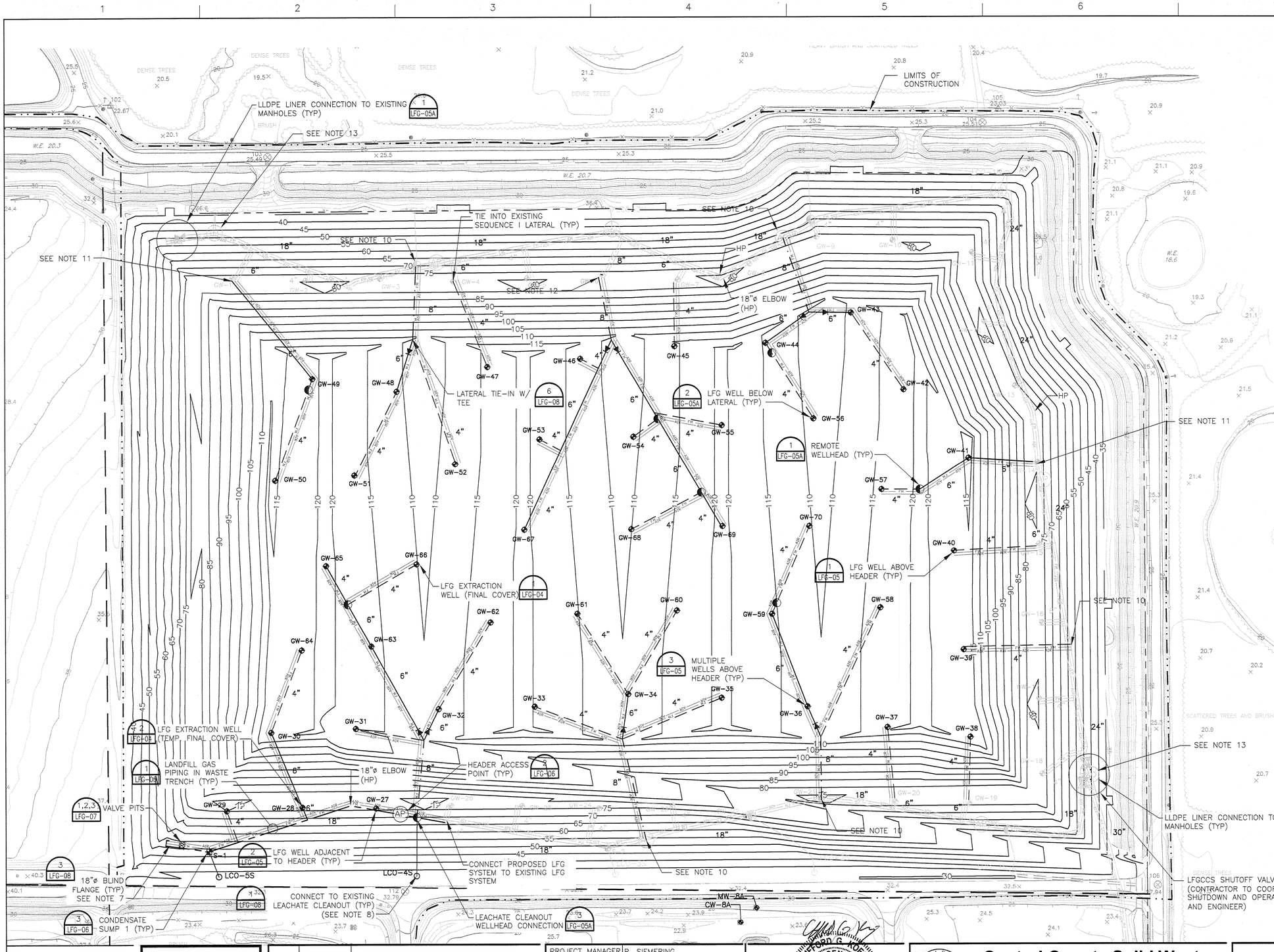

N

NOTES:

1. TOPOGRAPHY WITHIN PHASES I THROUGH IV WAS COMPILED BY KUCERA INTERNATIONAL INC. OF WILLOUGHBY, OHIO USING PHOTOGRAMMETRIC METHODS FROM AERIAL PHOTOGRAPHS DATED JUNE 2, 2010.
2. PROPOSED PHASE I FINAL GRADES DESIGNED BY HDR ENGINEERING, INC. TAMPA, FLORIDA.
3. CONTRACTOR TO PROVIDE A PRE-CONSTRUCTION SURVEY, PRIOR TO COMMENCING CONSTRUCTION ACTIVITIES, TO VERIFY EXISTING CONDITIONS.
4. LOCATION AND DENSITY OF LFG EXTRACTION SYSTEM ARE APPROXIMATE AND SUBJECT TO CHANGE BASED ON EXISTING CONDITIONS.
5. APPROXIMATE LOCATION OF PHASE I LEACHATE FORCEMAIN OBTAINED FROM RECORD DRAWINGS BY CAMP DRESSER & McKEE, INC. DATED APRIL 1998. VERIFY LOCATION IN FIELD.
6. HEADER PIPE SHALL BE HDPE SDR 17 AND LATERAL PIPES SHALL BE HDPE SDR 11.
7. BLIND FLANGE AT END OF SOUTH HEADER SHALL BE LOCATED 20 FEET OUTSIDE OF PHASE 2 LIMITS OF LINER. ACTUAL LOCATION TO BE DETERMINED AFTER PRE-CONSTRUCTION SURVEY.
8. ALL LEACHATE CLEANOUT CONNECTIONS SHALL HAVE A REMOTE WELLHEAD, NOT SHOWN FOR CLARITY.
9. AIR AND FORCEMAIN SHOWN OFFSET FOR CLARITY.
10. ELECTROFUSION COLLARS NEEDED FOR LATERAL/HEADER CONNECTIONS. (5 LOCATIONS)
11. CONTRACTOR TO REPLACE 6"X4"X4" TEE FOR LATERAL EXTENSION WITH A 6"X6"X4" TEE.
12. CONTRACTOR TO REPLACE 8"X6"X4" TEE FOR LATERAL EXTENSION WITH A 8"X8"X4" TEE.
13. CONTRACTOR TO EXTEND EXISTING MANHOLES TO MAINTAIN A MINIMUM OF 2 FEET FROM TOP OF MANHOLE DOWN TO TOP OF FINAL COVER (SOD).
14. IN THE EVENT OF LINER BALLOONING OWNER AND ENGINEER MAY DIRECT CONTRACTOR TO INSTALL ADDITIONAL GAS WELLS OR HORIZONTAL COLLECTORS AND NEGOTIATE COST WITH CONTRACTOR AS NEEDED.

LEGEND

S-1	CONDENSATE SUMP
GW-18	LFG EXTRACTION WELL
AP	ACCESS POINT
KO	KNOCKOUT POT
	REMOTE WELLHEAD
	EXISTING LEACHATE CLEANOUT
AIR AIR	2" HDPE SDR 9 AIR SUPPLY LINE
FM FM	4" HDPE SDR 9 CONDENSATE RETURN LINE
	4" HDPE SDR 11 LATERAL
	6" HDPE SDR 11 LATERAL
	8" HDPE SDR 11 LATERAL
	HDPE SDR 17 HEADER

FLORIDA DEPARTMENT OF ENVIRONMENTAL PROTECTION
SEP 21 2011
SOUTHWEST DISTRICT TAMPA

HDR Engineering, Inc.
2621 Cattlemen Rd., Ste. 106
Sarasota, Fl 34232-6212
(941) 342-2700
CA00004213

ISSUE	DATE	DESCRIPTION
0	10/2011	ISSUED FOR CONSTRUCTION

PROJECT MANAGER	R. SIEMERING
REVIEWED BY	C. KOENIG
CIVIL DESIGN	C. RESTREPO, T. YANOSCHACK
DRAWN BY	B. JOHNSON
PROJECT NUMBER	00096-130530-005

CLIFFORD G. KOENIG LICENSE No. 64078 STATE OF FLORIDA PROFESSIONAL ENGINEER
9-9-2011
CLIFFORD G. KOENIG, P. E.
CERTIFICATE NO. 64078

SARASOTA COUNTY

Central County Solid Waste Disposal Complex

PHASE I CLASS I LANDFILL CLOSURE AND LANDFILL GAS COLLECTION SYSTEM CONSTRUCTION DRAWINGS

SARASOTA COUNTY FLORIDA

PHASE I SEQUENCE 2 GAS SYSTEM LAYOUT

0 1" 2"

FILENAME	00C-12.DWG
SCALE	1"=100'

SHEET LFG-03

c:\pwworking\tpa\d0031929\700C-12.dwg, Plot, 9/16/2011 11:42:38 AM, Braddonn

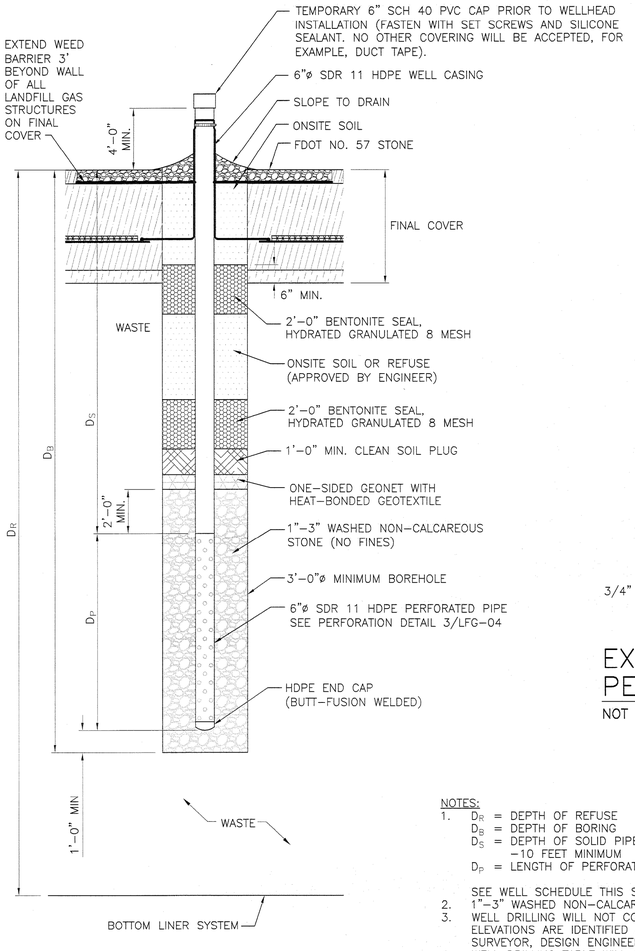

NOTES:
1. D_R = DEPTH OF REFUSE
   D_B = DEPTH OF BORING
   D_S = DEPTH OF SOLID PIPE (BELOW GRADE) -10 FEET MINIMUM
   D_P = LENGTH OF PERFORATED PIPE

   SEE WELL SCHEDULE THIS SHEET.
2. 1"-3" WASHED NON-CALCAREOUS STONE (NO FINES).
3. WELL DRILLING WILL NOT COMMENCE UNTIL EXISTING GRADE ELEVATIONS ARE IDENTIFIED AND VERIFIED BY PROJECT SURVEYOR, DESIGN ENGINEER, AND CQA REPRESENTATIVE.
4. WELL DRILLING TABLE WILL BE MANAGED BY OWNER OR DESIGNATED REPRESENTATIVE TO ENSURE ONLY THE VERIFIED WELL DEPTHS ARE PRESENT, AND THAT DRILLER AND CQA REPRESENTATIVE HAVE THE IDENTICAL INFORMATION PRIOR TO DRILLING.

LANDFILL GAS EXTRACTION WELL (FINAL COVER)

NOT TO SCALE

1 LFG-03

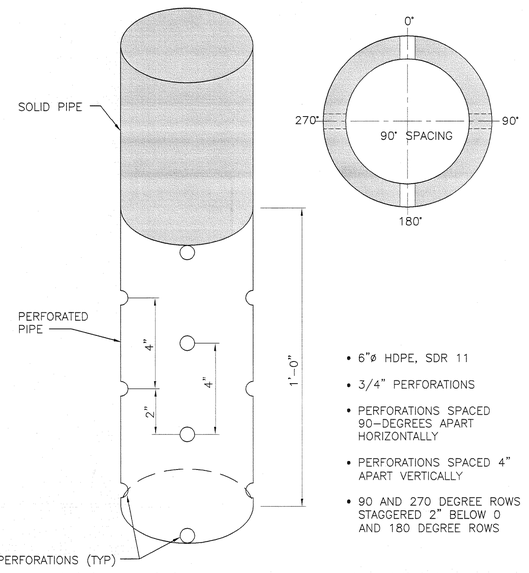

- 6"ø HDPE, SDR 11
- 3/4" PERFORATIONS
- PERFORATIONS SPACED 90-DEGREES APART HORIZONTALLY
- PERFORATIONS SPACED 4" APART VERTICALLY
- 90 AND 270 DEGREE ROWS STAGGERED 2" BELOW 0 AND 180 DEGREE ROWS

EXTRACTION WELL PERFORATION DETAIL

NOT TO SCALE

3 LFG-04

WELL ID	NORTHING	EASTING	FG ELEVATION	BG ELEVATION	DEPTH OF WASTE (D_R)	BOREHOLE (D_B)	SOLID PIPE (D_S)	PERFORATED PIPE (D_P)	Grid Coordinates (Surveyed) Northing	Grid Coordinates (Surveyed) Easting	Surveyed Cover Elevation	Calculated Borehole Depth (D_B)	Calculated Perforated Length (D_P)
GW-27	1042588.88	529696.26	78.0	29.0	49.0	32.0	10.0	22.0					
GW-28	1042590.90	529546.65	79.0	31.0	48.0	32.0	10.0	22.0					
GW-29	1042583.90	529394.20	77.0	28.0	49.0	32.0	10.0	22.0					
GW-30	1042740.47	529484.07	117.0	30.0	87.0	58.0	10.0	48.0					
GW-31	1042747.90	529655.28	118.0	30.0	88.0	58.0	10.0	48.0					
GW-32	1042798.78	529835.56	113.0	29.0	84.0	56.0	10.0	46.0					
GW-33	1042791.98	530017.16	120.0	31.0	89.0	59.0	10.0	49.0					
GW-34	1042816.73	530205.71	111.0	29.0	82.0	54.0	10.0	44.0					
GW-35	1042809.04	530393.83	121.0	32.0	89.0	59.0	10.0	49.0					
GW-36	1042791.49	530567.31	112.0	28.0	84.0	56.0	10.0	46.0					
GW-37	1042749.48	530727.80	118.0	31.0	87.0	58.0	10.0	48.0					
GW-38	1042729.74	530894.99	117.0	30.0	87.0	58.0	10.0	48.0					
GW-39	1042904.29	530881.78	117.0	31.0	86.0	57.0	10.0	47.0					
GW-40	1043101.51	530862.82	117.0	31.0	86.0	57.0	10.0	47.0					
GW-41	1043267.03	530892.47	115.0	31.0	84.0	56.0	10.0	46.0					
GW-42	1043423.64	530761.90	119.0	29.0	90.0	60.0	10.0	50.0					
GW-43	1043577.01	530655.82	111.0	27.0	84.0	56.0	10.0	46.0					
GW-44	1043516.97	530484.19	115.0	26.0	89.0	59.0	10.0	49.0					
GW-45	1043510.85	530300.25	114.0	27.0	87.0	58.0	10.0	48.0					
GW-46	1043486.01	530110.70	113.0	26.0	87.0	58.0	10.0	48.0					
GW-47	1043470.08	529922.80	116.0	28.0	88.0	58.0	10.0	48.0					
GW-48	1043420.67	529739.69	111.0	26.0	85.0	56.0	10.0	46.0					
GW-49	1043411.11	529551.95	118.0	29.0	89.0	59.0	10.0	49.0					
GW-50	1043343.55	529493.43	115.0	28.0	87.0	58.0	10.0	48.0					
GW-51	1043253.76	529653.64	117.0	28.0	89.0	59.0	10.0	49.0					
GW-52	1043276.06	529857.54	112.0	27.0	85.0	56.0	10.0	46.0					
GW-53	1043325.43	530028.10	119.0	27.0	92.0	61.0	10.0	51.0					
GW-54	1043330.53	530217.36	109.0	26.0	83.0	55.0	10.0	45.0					
GW-55	1043353.23	530395.40	121.0	29.0	92.0	61.0	10.0	51.0					
GW-56	1043366.35	530580.19	109.0	26.0	83.0	55.0	10.0	45.0					
GW-57	1043224.57	530716.99	116.0	28.0	88.0	58.0	10.0	48.0					
GW-58	1042988.69	530713.97	117.0	28.0	89.0	59.0	10.0	49.0					
GW-59	1042976.22	530495.90	116.0	27.0	89.0	59.0	10.0	49.0					
GW-60	1042983.27	530304.05	116.0	30.0	86.0	57.0	10.0	47.0					
GW-61	1042977.11	530103.91	115.0	29.0	86.0	57.0	10.0	47.0					
GW-62	1042960.10	529928.06	118.0	31.0	87.0	58.0	10.0	48.0					
GW-63	1042912.18	529687.23	116.0	29.0	87.0	58.0	10.0	48.0					
GW-64	1042904.69	529545.79	119.0	31.0	88.0	58.0	10.0	48.0					
GW-65	1043072.86	529595.53	121.0	31.0	90.0	60.0	10.0	50.0					
GW-66	1043075.88	529779.37	110.0	28.0	82.0	54.0	10.0	44.0					
GW-67	1043145.00	529996.89	121.0	29.0	92.0	61.0	10.0	51.0					
GW-68	1043145.70	530212.83	110.0	26.0	84.0	56.0	10.0	46.0					
GW-69	1043151.72	530396.57	121.0	29.0	92.0	61.0	10.0	51.0					
GW-70	1043151.52	530571.69	110.0	26.0	84.0	56.0	10.0	46.0					
Total						2,463.0	440.0	2,023.0					

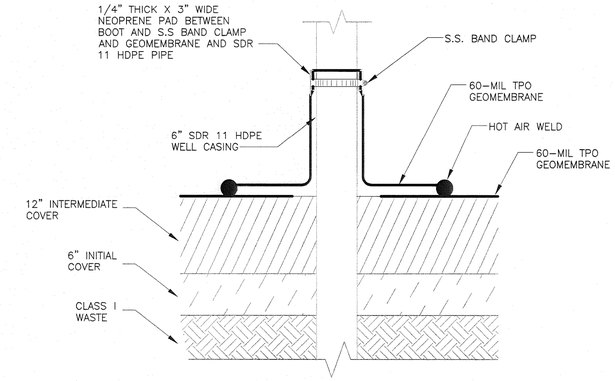

NOTES:

1. EXTRUSION WELD LINER AROUND PIPE FOR ACCESS POINTS AND SUMP.

LANDFILL GAS EXTRACTION WELL (TEMP FINAL COVER) DETAIL

NOT TO SCALE

2 LFG-03

FLORIDA DEPARTMENT OF ENVIRONMENTAL PROTECTION
SEP 21 2011
SOUTHWEST DISTRICT TAMPA

HDR Engineering, Inc.
2621 Cattlemen Rd., Ste. 106
Sarasota, Fl 34232-6212
(941) 342-2700
CA00004213

ISSUE	DATE	DESCRIPTION
0	10/2011	ISSUED FOR CONSTRUCTION

PROJECT MANAGER	R. SIEMERING
REVIEWED BY	C. KOENIG
CIVIL DESIGN	C. RESTREPO, T. YANOSCHACK
DRAWN BY	B. JOHNSON
PROJECT NUMBER	00096-130530-005

CLIFFORD G. KOENIG LICENSE No. 64078 STATE OF FLORIDA PROFESSIONAL ENGINEER
9-19-2011

CLIFFORD G. KOENIG, P. E.
CERTIFICATE NO. 64078

SARASOTA COUNTY

Central County Solid Waste Disposal Complex

PHASE I CLASS I LANDFILL CLOSURE AND LANDFILL GAS COLLECTION SYSTEM CONSTRUCTION DRAWINGS

SARASOTA COUNTY FLORIDA

EXTRACTION WELL DETAILS AND WELL SCHEDULE

0 1" 2"

FILENAME	00D-15.DWG
SCALE	AS SHOWN

SHEET LFG-04

c:\pwworking\tavld\d0182970000-15.dwg, Plot, 9/16/2011 11:43:01 AM, BradJohn

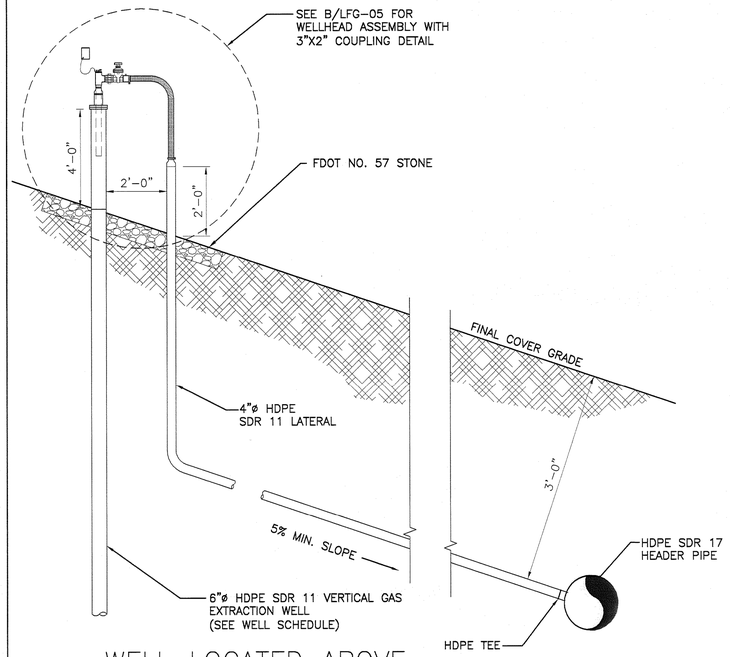

WELL LOCATED ABOVE HEADER PIPE (TYPE #1)

NOT TO SCALE

1 LFG-03

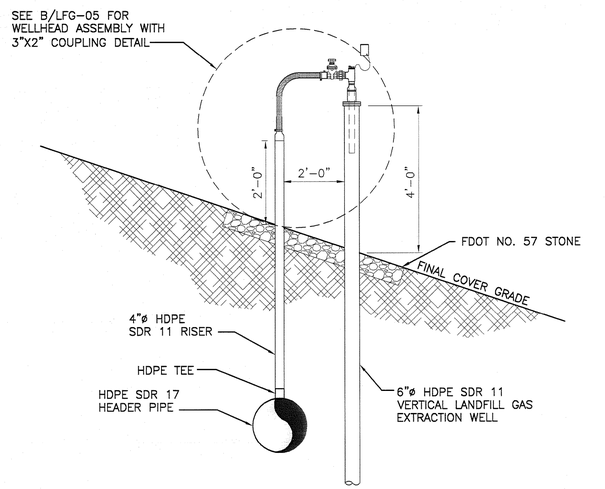

WELL LOCATED ADJACENT TO HEADER PIPE (TYPE #2)

NOT TO SCALE

2 LFG-03

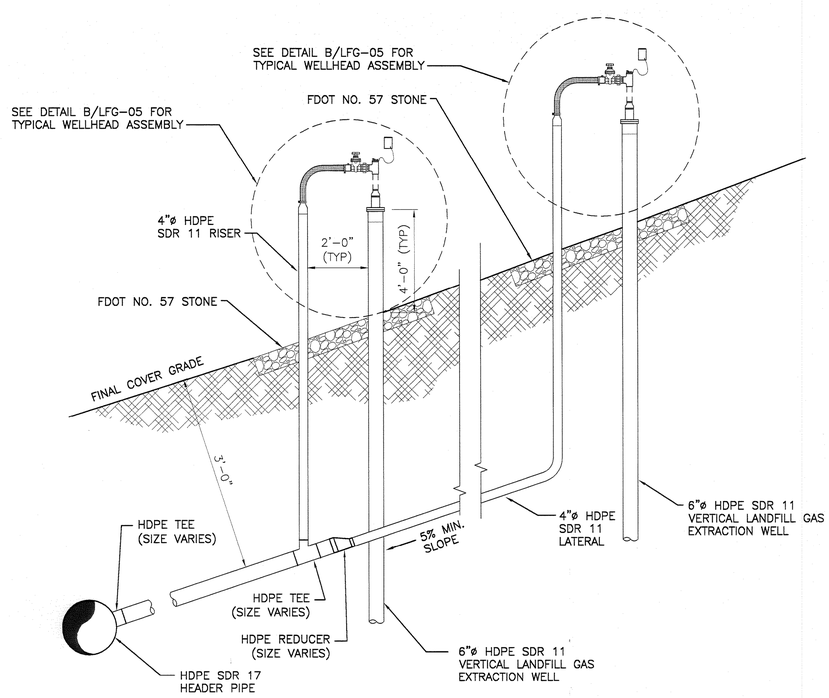

MULTIPLE WELLS LOCATED ABOVE HEADER PIPE (TYPE #3)

NOT TO SCALE

3 LFG-03

VERTICAL WELL HEAD CONFIGURATION SCHEDULE

TYPE #1				TYPE #2
GW-29	GW-40	GW-53	GW-65	GW-27
GW-31	GW-42	GW-55	GW-67	
GW-33	GW-45	GW-58	GW-69	
GW-35	GW-46	GW-60		
GW-37	GW-47	GW-61		
GW-38	GW-51	GW-62		
GW-39	GW-52	GW-64		

TYPE #3		TYPE #4	LCO
GW-28	GW-44	GW-50	LCO-4S
GW-30	GW-48	GW-54	LCO-5S
GW-32	GW-49	GW-56	
GW-34	GW-59	GW-57	
GW-36	GW-63	GW-66	
GW-41		GW-68	
GW-43		GW-70	

FOR INFORMATIONAL PURPOSES ONLY
SEE TYP WELL HEAD ASSEMBLIES FOR SIZES, DIMENSIONS AND SPECIFICS ON COMPONENTS. SEE ABOVE FOR WELL HEAD CONFIGURATION SCHEDULE.

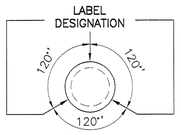

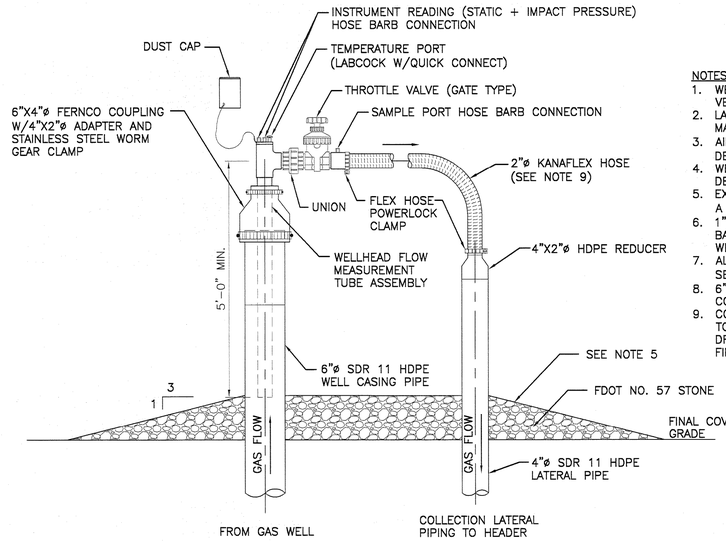

ABOVE GRADE WELLHEAD ASSEMBLY WITH 6"X4" COUPLING DETAIL

NOT TO SCALE

A LFG-05

NOTES:
1. WELLHEAD ASSEMBLY SHOWN REPRESENTS 2"ø LANDTEC VERTICAL ACCU-FLO WELLHEAD ASSEMBLY.
2. LABEL ALL WELL RISERS WITH IDENTIFICATION NUMBER TO MATCH EXISTING WELL RISERS
3. AIR AND FORCEMAIN LINES NOT SHOWN FOR CLARITY (SEE DETAIL 4/LFG-08).
4. WELLHEAD TO BE CONSTRUCTED TO ALLOW INSTALLATION OF DEWATERING PUMP.
5. EXISTING GRADE TO BE SLOPED FOR POSITIVE DRAINAGE IN A 1'-0"ø SURROUNDING SURFACE EXPRESSION.
6. 1" DIAMETER RISERS FOR FORCEMAIN AND AIRLINE WITH BALL VALVES ARE REQUIRED FOR ALL VERTICAL EXTRACTION WELLS.
7. ALL WELLS TO BE CONSTRUCTED WITH BOOT CONNECTION. SEE DETAILS 1 AND 2/LFG-04
8. 6"x4" COUPLING DETAIL A/LFG-05 CORRESPONDS TO LCO CONNECTIONS AND REMOTE WELLHEADS ONLY.
9. CONTRACTOR SHALL PROVIDE SUFFICIENT SLACK IN HOSE TO ALLOW FOR SETTLEMENT, HOWEVER HOSE MUST FREELY DRAIN TO THE LATERAL PIPE AND NOT HOLD WATER. THE FINAL HOSE LENGTH MUST BE APPROVED BY THE ENGINEER.

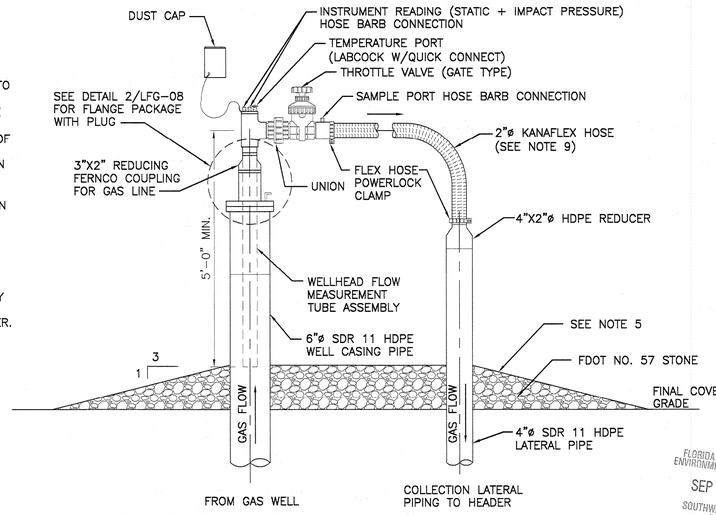

ABOVE GRADE WELLHEAD ASSEMBLY WITH 3"X2" COUPLING DETAIL

NOT TO SCALE

B LFG-05

FLORIDA DEPARTMENT OF ENVIRONMENTAL PROTECTION
SEP 21 2011
SOUTHWEST DISTRICT TAMPA

HDR Engineering, Inc.
2621 Cattlemen Rd., Ste. 106
Sarasota, Fl 34232-6212
(941) 342-2700
CA00004213

ISSUE	DATE	DESCRIPTION
0	10/2011	ISSUED FOR CONSTRUCTION

PROJECT MANAGER	R. SIEMERING
REVIEWED BY	C. KOENIG
CIVIL DESIGN	C. RESTREPO, T. YANOSCHACK
DRAWN BY	B. JOHNSON
PROJECT NUMBER	00096-130530-005

CLIFFORD G. KOENIG
LICENSE No. 64078
STATE OF FLORIDA
PROFESSIONAL ENGINEER
9-19-2011

CLIFFORD G. KOENIG, P. E.
CERTIFICATE NO. 64078

SARASOTA COUNTY

Central County Solid Waste Disposal Complex

PHASE I CLASS I LANDFILL CLOSURE AND LANDFILL GAS COLLECTION SYSTEM CONSTRUCTION DRAWINGS

SARASOTA COUNTY FLORIDA

WELLHEAD AND CONFIGURATION DETAILS

0 1" 2"

FILENAME	00D-16.DWG
SCALE	AS SHOWN

SHEET LFG-05

c:\pwworking\sjo\d0315297000-15.dwg, Plot, 9/16/2011 11:45:07 AM, Bradohn

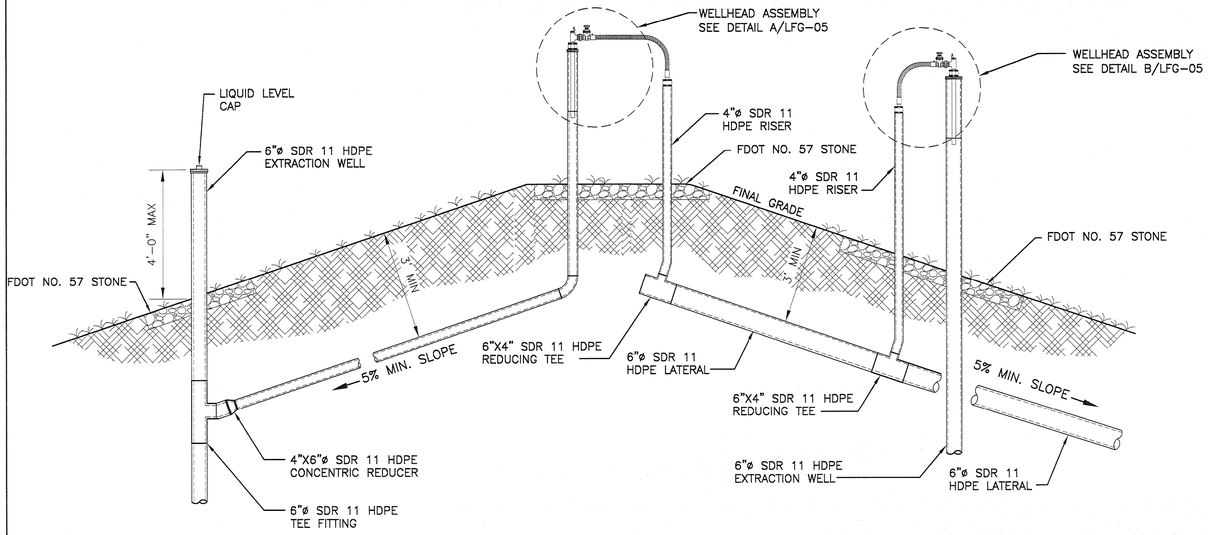

REMOTE WELLHEAD
NOT TO SCALE
1
LFG-03

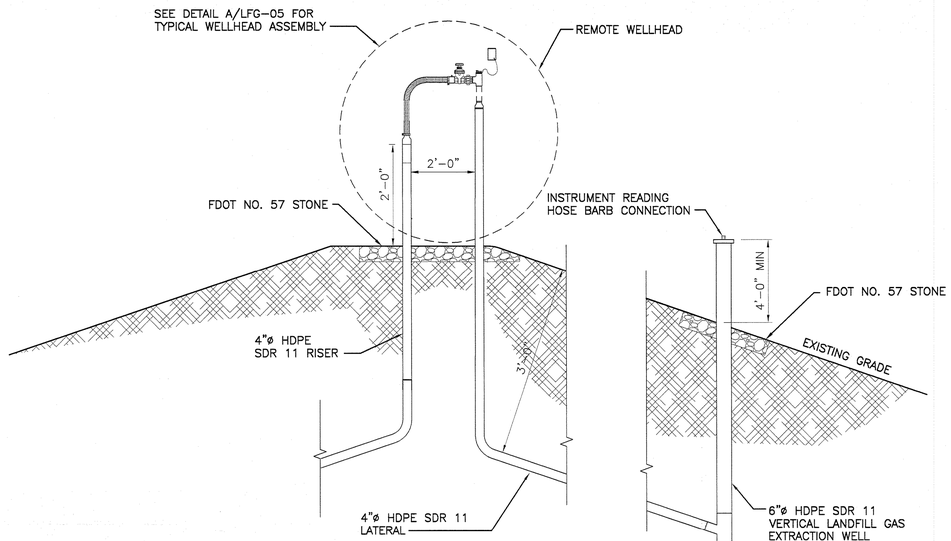

WELL LOCATED BELOW
LATERAL (TYPE #4)
NOT TO SCALE
2
LFG-03

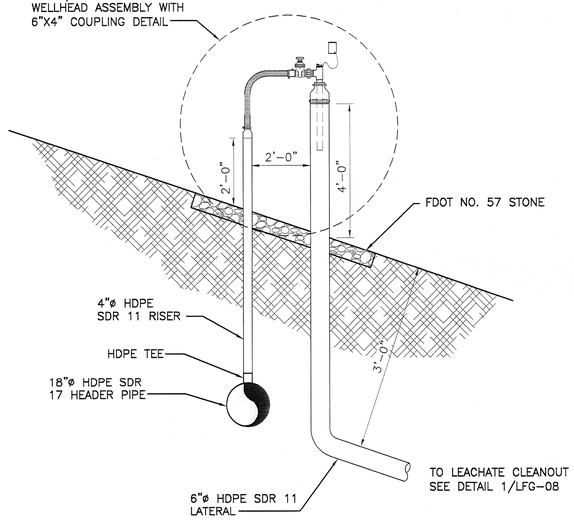

LEACHATE CLEANOUT
CONNECTION
NOT TO SCALE
3
LFG-03

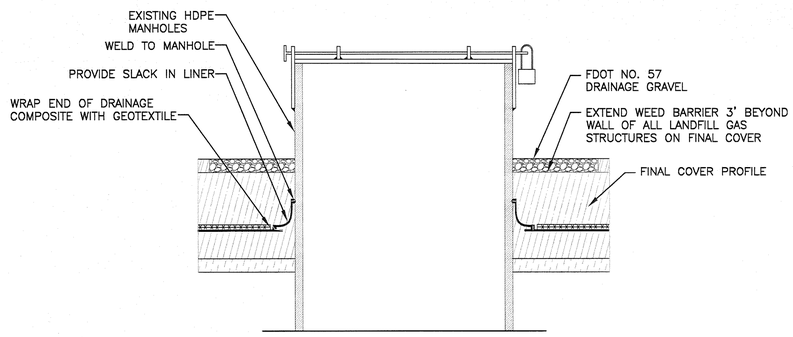

FINAL COVER LLDPE LINER CONNECTION
TO EXISTING MANHOLES (TYP)
NOT TO SCALE
1
LFG-03

FLORIDA DEPARTMENT OF
ENVIRONMENTAL PROTECTION
SEP 21 2011
SOUTHWEST DISTRICT
TAMPA

HDR
HDR Engineering, Inc.
2621 Cattlemen Rd., Ste. 106
Sarasota, Fl 34232-6212
(941) 342-2700
CA00004213

ISSUE	DATE	DESCRIPTION
0	10/2011	ISSUED FOR CONSTRUCTION

PROJECT MANAGER	R. SIEMERING
REVIEWED BY	C. KOENIG
CIVIL DESIGN	C. RESTREPO, T. YANOSCHACK
DRAWN BY	B. JOHNSON
PROJECT NUMBER	00096-130530-005

CLIFFORD G. KOENIG
LICENSE
No. 64078
STATE OF FLORIDA
PROFESSIONAL ENGINEER
9-17-2011

CLIFFORD G. KOENIG, P. E.
CERTIFICATE NO. 64078

SARASOTA COUNTY

Central County Solid Waste Disposal Complex
PHASE I CLASS I LANDFILL CLOSURE AND LANDFILL GAS COLLECTION SYSTEM CONSTRUCTION DRAWINGS

SARASOTA COUNTY FLORIDA

WELLHEAD AND CONFIGURATION DETAILS

0 1" 2"

FILENAME	00LFG-05A.DWG
SCALE	AS SHOWN

SHEET
LFG-5A

c:\pwworking\tpa\d0318297\00LFG-05A.dwg, Plot, 9/16/2011 11:43:15 AM, BradJohn

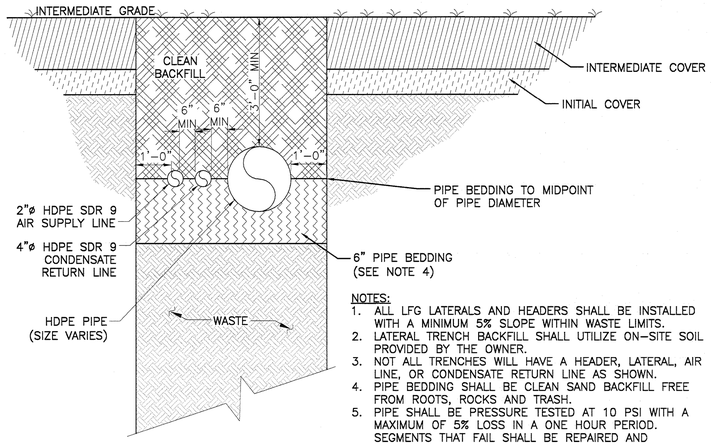

NOTES:
1. ALL LFG LATERALS AND HEADERS SHALL BE INSTALLED WITH A MINIMUM 5% SLOPE WITHIN WASTE LIMITS.
2. LATERAL TRENCH BACKFILL SHALL UTILIZE ON-SITE SOIL PROVIDED BY THE OWNER.
3. NOT ALL TRENCHES WILL HAVE A HEADER, LATERAL, AIR LINE, OR CONDENSATE RETURN LINE AS SHOWN.
4. PIPE BEDDING SHALL BE CLEAN SAND BACKFILL FREE FROM ROOTS, ROCKS AND TRASH.
5. PIPE SHALL BE PRESSURE TESTED AT 10 PSI WITH A MAXIMUM OF 5% LOSS IN A ONE HOUR PERIOD. SEGMENTS THAT FAIL SHALL BE REPAIRED AND RETESTED.

LANDFILL GAS PIPING IN WASTE TRENCH DETAIL

NOT TO SCALE

1 / LFG-06

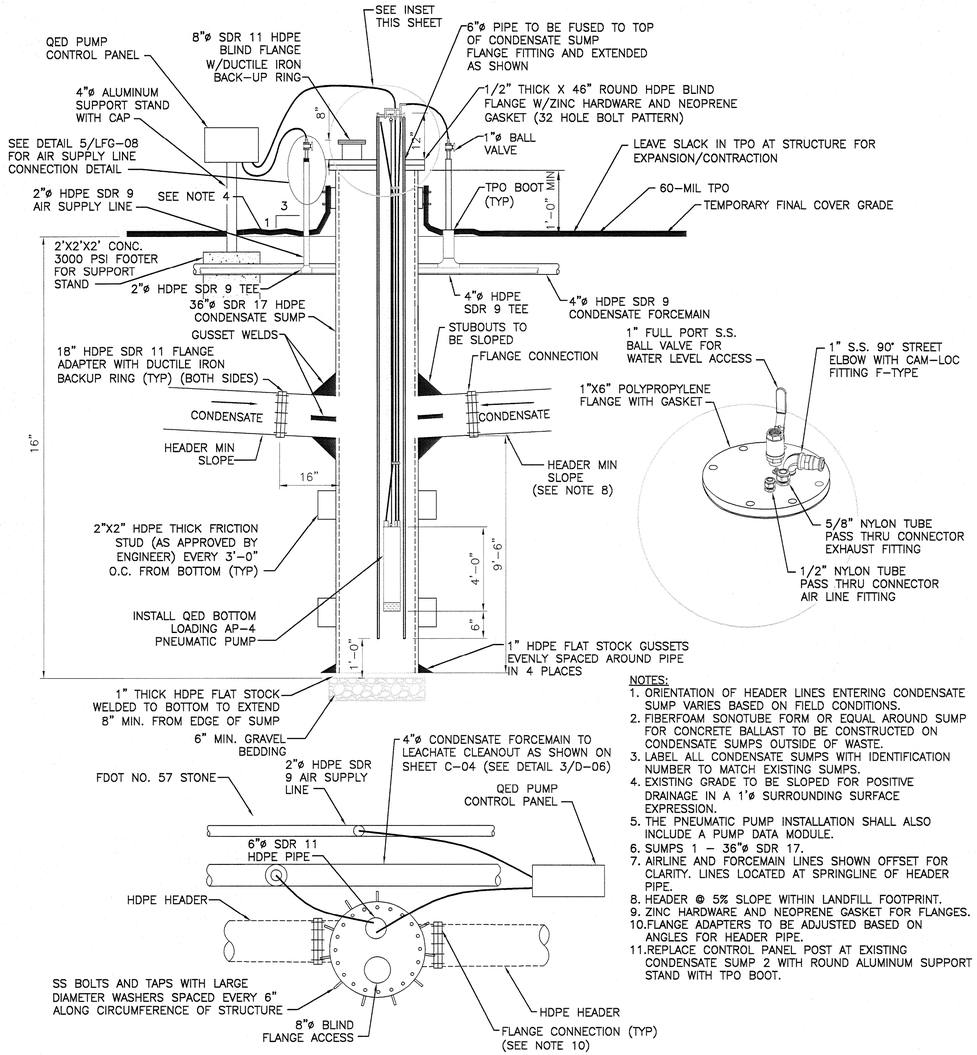

NOTES:
1. ORIENTATION OF HEADER LINES ENTERING CONDENSATE SUMP VARIES BASED ON FIELD CONDITIONS.
2. FIBERFOAM SONOTUBE FORM OR EQUAL AROUND SUMP FOR CONCRETE BALLAST TO BE CONSTRUCTED ON CONDENSATE SUMPS OUTSIDE OF WASTE.
3. LABEL ALL CONDENSATE SUMPS WITH IDENTIFICATION NUMBER TO MATCH EXISTING SUMPS.
4. EXISTING GRADE TO BE SLOPED FOR POSITIVE DRAINAGE IN A 1'ø SURROUNDING SURFACE EXPRESSION.
5. THE PNEUMATIC PUMP INSTALLATION SHALL ALSO INCLUDE A PUMP DATA MODULE.
6. SUMPS 1 - 36"ø SDR 17.
7. AIRLINE AND FORCEMAIN LINES SHOWN OFFSET FOR CLARITY. LINES LOCATED AT SPRINGLINE OF HEADER PIPE.
8. HEADER @ 5% SLOPE WITHIN LANDFILL FOOTPRINT.
9. ZINC HARDWARE AND NEOPRENE GASKET FOR FLANGES.
10. FLANGE ADAPTERS TO BE ADJUSTED BASED ON ANGLES FOR HEADER PIPE.
11. REPLACE CONTROL PANEL POST AT EXISTING CONDENSATE SUMP 2 WITH ROUND ALUMINUM SUPPORT STAND WITH TPO BOOT.

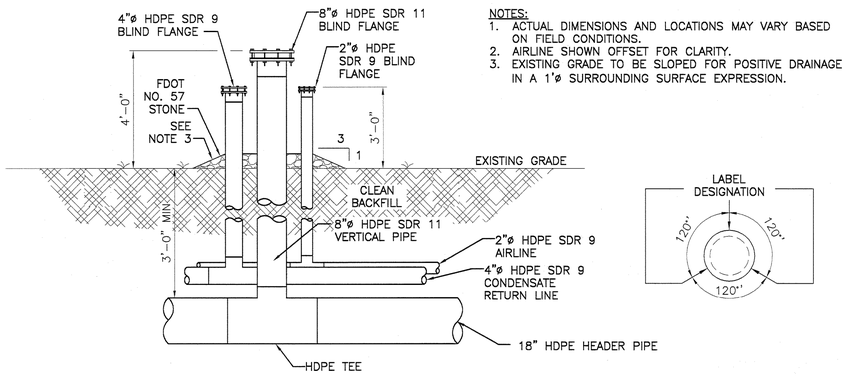

NOTES:
1. ACTUAL DIMENSIONS AND LOCATIONS MAY VARY BASED ON FIELD CONDITIONS.
2. AIRLINE SHOWN OFFSET FOR CLARITY.
3. EXISTING GRADE TO BE SLOPED FOR POSITIVE DRAINAGE IN A 1'ø SURROUNDING SURFACE EXPRESSION.

HEADER ACCESS POINT

NOT TO SCALE

2 / LFG-03

TOP VIEW

CONDENSATE SUMP DETAIL (TYP)

NOT TO SCALE

3 / LFG-03

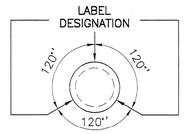

FLORIDA DEPARTMENT OF ENVIRONMENTAL PROTECTION
SEP 21 2011
SOUTHWEST DISTRICT TAMPA

HDR Engineering, Inc.
2621 Cattlemen Rd., Ste. 106
Sarasota, Fl 34232-6212
(941) 342-2700
CA00004213

ISSUE	DATE	DESCRIPTION
0	10/2011	ISSUED FOR CONSTRUCTION

PROJECT MANAGER	R. SIEMERING
REVIEWED BY	C. KOENIG
CIVIL DESIGN	C. RESTREPO, T. YANOSCHACK
DRAWN BY	B. JOHNSON
PROJECT NUMBER	00096-130530-005

CLIFFORD G. KOENIG, P. E.
CERTIFICATE NO. 64078

SARASOTA COUNTY

Central County Solid Waste Disposal Complex

PHASE I CLASS I LANDFILL CLOSURE AND LANDFILL GAS COLLECTION SYSTEM CONSTRUCTION DRAWINGS

SARASOTA COUNTY FLORIDA

GENERAL LFG DETAILS

FILENAME	00D-17.DWG
SCALE	AS SHOWN

SHEET LFG-06

c:\pwworking\tpa\d0318297\00D-17.dwg, Plot, 9/16/2011 11:43:25 AM, BradJohn

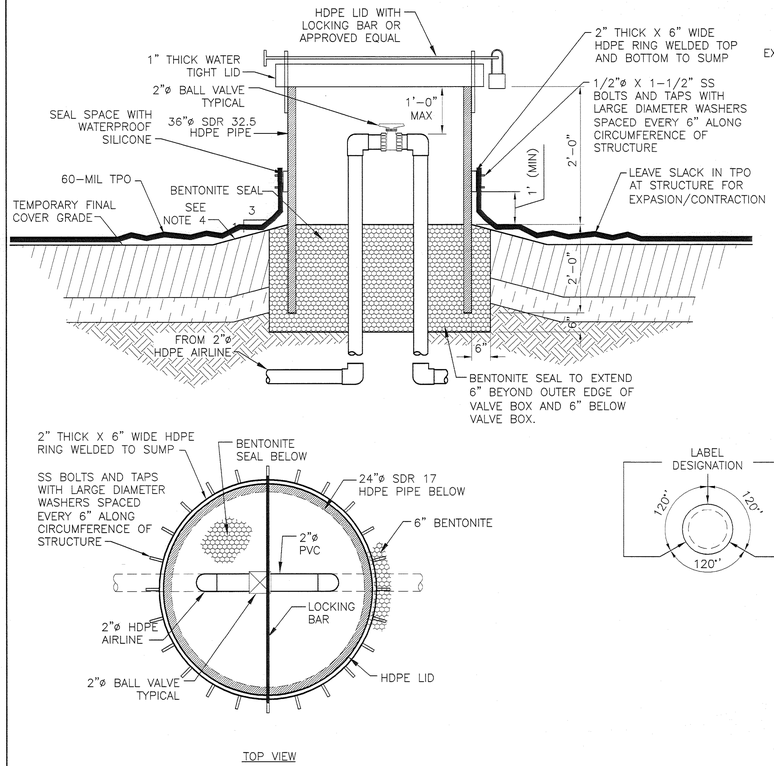

AIRLINE VALVE PIT

NOT TO SCALE

1 LFG-03

NOTES:
1. ALL FITTINGS SHALL BE HDPE SDR 9 UNLESS OTHERWISE NOTED.
2. VALVE BOX AND COVER SHALL BE 2'-0"ø MIN, WITH LID AND LOCKING DEVICE.
3. LABEL ALL VALVE PITS WITH IDENTIFICATION NUMBER TO MATCH EXISTING VALVE PITS.
4. EXISTING GRADE TO BE SLOPED FOR POSITIVE DRAINAGE IN A 1'ø SURROUNDING SURFACE EXPRESSION.

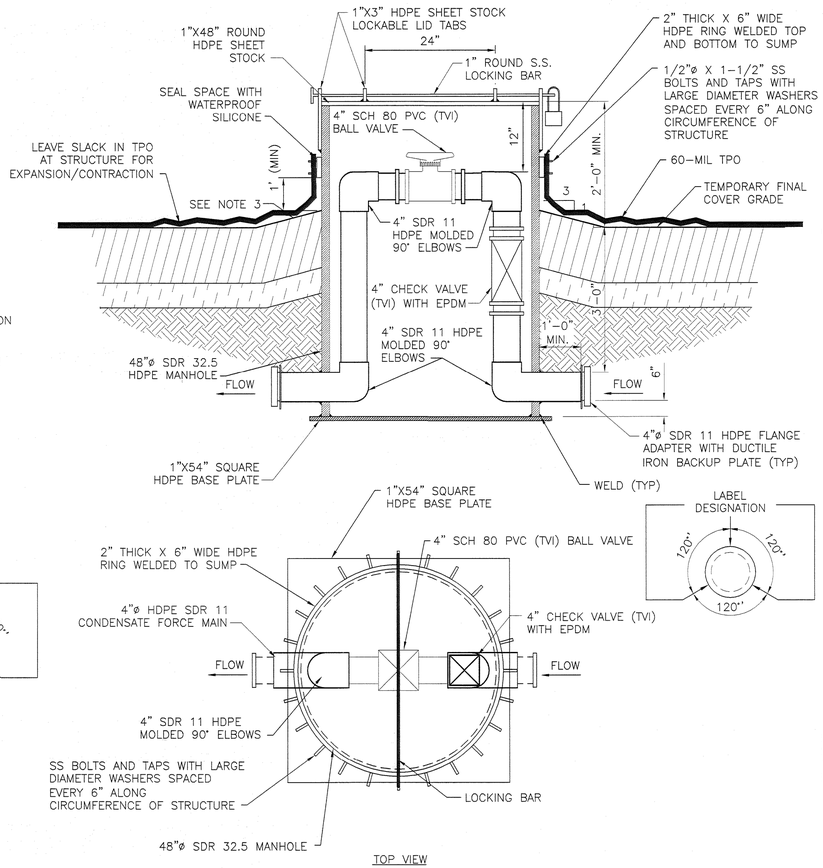

FORCE MAIN VALVE PIT

NOT TO SCALE

2 LFG-03

NOTES:
1. ACTUAL DIMENSIONS AND LOCATIONS MAY VARY BASED ON FIELD CONDITIONS.
2. LABEL ALL VALVE PITS WITH IDENTIFICATION NUMBER TO MATCH EXISTING VALVE PITS.
3. EXISTING GRADE TO BE SLOPED FOR POSITIVE DRAINAGE IN A 1'ø SURROUNDING SURFACE EXPRESSION.

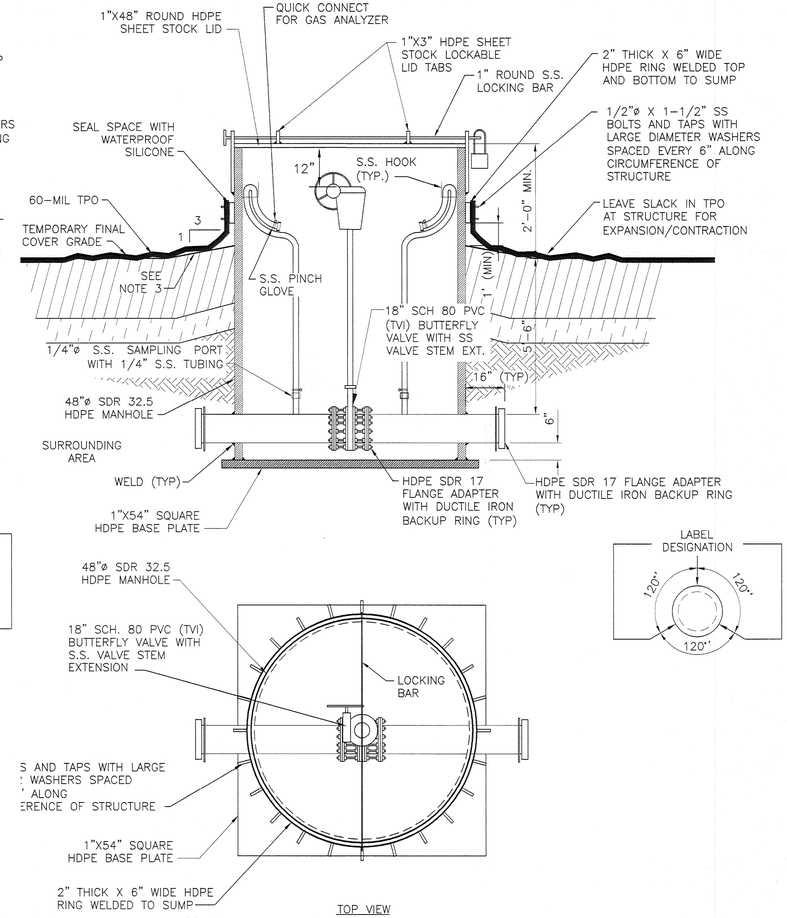

HEADER LINE ISOLATION VALVE PIT

NOT TO SCALE

3 LFG-03

NOTES:
1. HOOK FOR SAMPLE PORT SHALL BE CONNECTED TO WALL OF VALVE PIT WITHIN REACH OF TOP OF VALVE PIT.
2. LABEL ALL VALVE PITS WITH IDENTIFICATION NUMBER MATCHING EXISTING VALVE PITS.
3. EXISTING GRADE TO BE SLOPED FOR POSITIVE DRAINAGE IN A 1'ø SURROUNDING SURFACE EXPRESSION.

FLORIDA DEPARTMENT OF ENVIRONMENTAL PROTECTION
SEP 21 2011
SOUTHWEST DISTRICT TAMPA

HDR Engineering, Inc.
2621 Cattlemen Rd., Ste. 106
Sarasota, Fl 34232-6212
(941) 342-2700
CA00004213

ISSUE	DATE	DESCRIPTION
0	10/2011	ISSUED FOR CONSTRUCTION

PROJECT MANAGER	R. SIEMERING
REVIEWED BY	C. KOENIG
CIVIL DESIGN	C. RESTREPO, T. YANOSCHACK
DRAWN BY	B. JOHNSON
PROJECT NUMBER	00096-130530-005

CLIFFORD G. KOENIG, P. E.
CERTIFICATE NO. 64078

SARASOTA COUNTY

Central County Solid Waste Disposal Complex

PHASE I CLASS I LANDFILL CLOSURE AND LANDFILL GAS COLLECTION SYSTEM CONSTRUCTION DRAWINGS

SARASOTA COUNTY FLORIDA

VALVE PIT DETAILS

0 1" 2"

FILENAME	00D-18.DWG
SCALE	AS SHOWN

SHEET LFG-07

c:\pwworking\tpa\d0318297\00D-18.dwg, Plot, 9/16/2011 11:43:33 AM, BradJohn

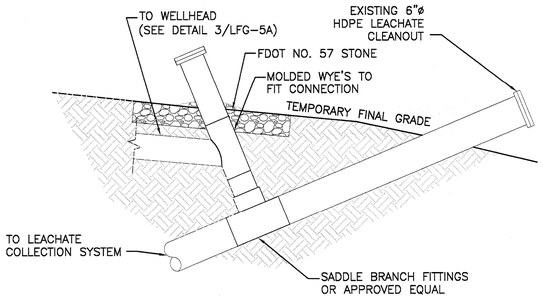

GAS COLLECTION FROM LEACHATE CLEANOUT CONNECTION (TYP)

NOT TO SCALE

1 / LFG-03 / LFG-5A

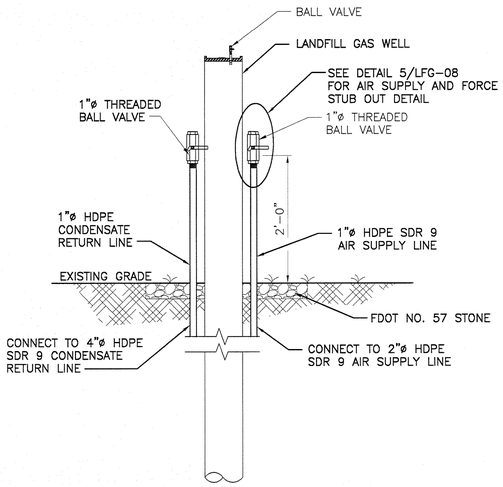

WELL RISER DETAIL (TYP)

NOT TO SCALE

4 / LFG-05

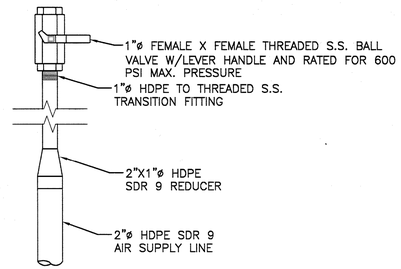

AIR SUPPLY AND FORCE MAIN LINE CONNECTION DETAIL (TYP)

NOT TO SCALE

5 / LFG-08

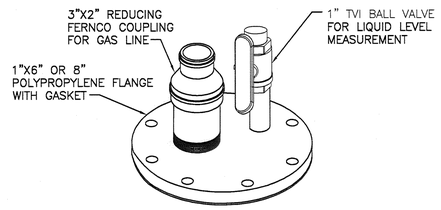

VERTICAL WELL WITHOUT PUMP FLANGE PACKAGE

NOT TO SCALE

2 / LFG-05

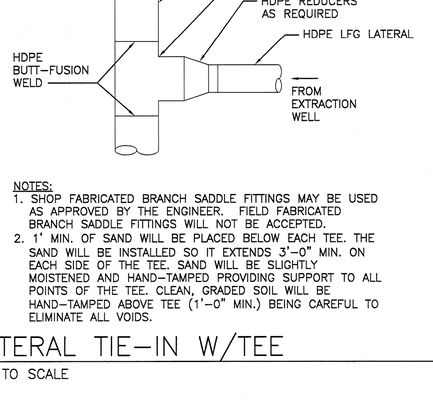

NOTES:
1. SHOP FABRICATED BRANCH SADDLE FITTINGS MAY BE USED AS APPROVED BY THE ENGINEER. FIELD FABRICATED BRANCH SADDLE FITTINGS WILL NOT BE ACCEPTED.
2. 1' MIN. OF SAND WILL BE PLACED BELOW EACH TEE. THE SAND WILL BE INSTALLED SO IT EXTENDS 3'-0" MIN. ON EACH SIDE OF THE TEE. SAND WILL BE SLIGHTLY MOISTENED AND HAND-TAMPED PROVIDING SUPPORT TO ALL POINTS OF THE TEE. CLEAN, GRADED SOIL WILL BE HAND-TAMPED ABOVE TEE (1'-0" MIN.) BEING CAREFUL TO ELIMINATE ALL VOIDS.

LATERAL TIE-IN W/TEE

NOT TO SCALE

6 / LFG-03

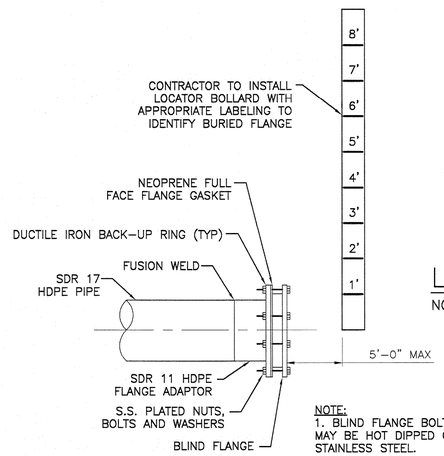

NOTE:
1. BLIND FLANGE BOLTS AND WASHERS MAY BE HOT DIPPED GALVANIZED OR STAINLESS STEEL.

BLIND FLANGE WITH LOCATOR BOLLARD DETAIL

NOT TO SCALE

3 / LFG-03

FLORIDA DEPARTMENT OF ENVIRONMENTAL PROTECTION
SEP 21 2011
SOUTHWEST DISTRICT
TAMPA

HDR Engineering, Inc.
2621 Cattlemen Rd., Ste. 106
Sarasota, Fl 34232-6212
(941) 342-2700
CA00004213

ISSUE	DATE	DESCRIPTION
0	10/2011	ISSUED FOR CONSTRUCTION

PROJECT MANAGER	R. SIEMERING
REVIEWED BY	C. KOENIG
CIVIL DESIGN	C. RESTREPO, T. YANOSCHACK
DRAWN BY	B. JOHNSON
PROJECT NUMBER	00096-130530-005

CLIFFORD G. KOENIG LICENSE No. 64078 STATE OF FLORIDA PROFESSIONAL ENGINEER 9-19-2011

CLIFFORD G. KOENIG, P. E.
CERTIFICATE NO. 64078

SARASOTA COUNTY

Central County Solid Waste Disposal Complex

PHASE I CLASS I LANDFILL CLOSURE AND LANDFILL GAS COLLECTION SYSTEM CONSTRUCTION DRAWINGS

SARASOTA COUNTY FLORIDA

GENERAL LFG DETAILS

0 1" 2"

FILENAME	00D-19.DWG
SCALE	AS SHOWN

SHEET LFG-08

c:\pwworking\fsdd0315\d2979000-19.dwg, Plot, 9/19/2011 11:43:42 AM, Braddonn

CONSTRUCTION PLANS FOR

CENTRAL COUNTY SOLID WASTE DISPOSAL COMPLEX BORROW FACILITY - PHASE IV

SECTION - 34 TOWNSHIP - 37S RANGE - 19E

VICINITY MAP

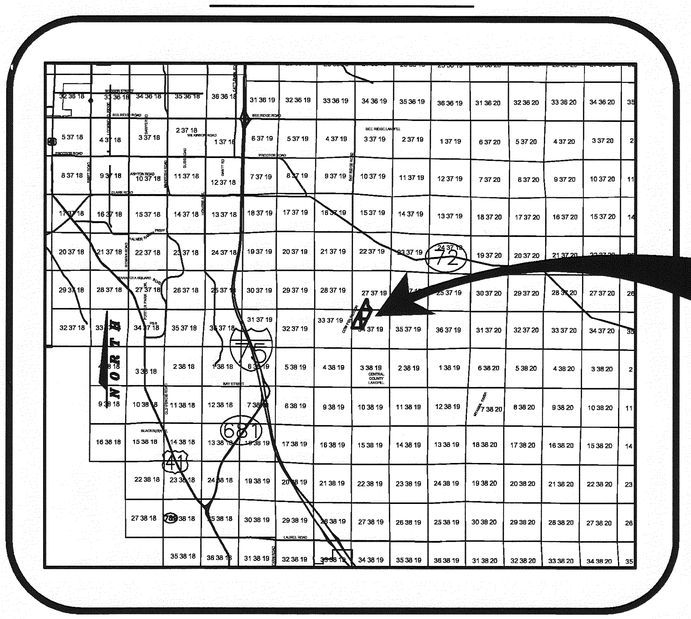

SARASOTA COUNTY 1921

INDEX

SHT. NO.	TITLE
1	COVER SHEET
2	GENERAL NOTES
3	OVERALL SITE PLAN
4	SITE / DRAINAGE PLAN - BORROW AREA A
5	SITE / DRAINAGE PLAN - BORROW AREA B
6	SITE / DRAINAGE PLAN - BORROW AREA C
7	CROSS SECTIONS
8	EROSION AND SEDIMENT CONTROL

PREPARED FOR

SARASOTA COUNTY ENVIRONMENTAL SERVICES SOLID WASTE OPERATIONS

4000 KNIGHTS TRAIL ROAD
NOKOMIS, FLORIDA 34275

PREPARED BY

PBS&J

PRINCIPAL OFFICE
5300 WEST CYPRESS STREET
TAMPA, FLORIDA 33607
FBPR CERT. OF AUTH. # 24

PRODUCTION OFFICE
2803 FRUITVILLE ROAD SUITE 130
SARASOTA, FLORIDA 34237
PHONE: (941) 954-4036

FLORIDA DEPARTMENT OF ENVIRONMENTAL PROTECTION
SEP 21 2011
SOUTHWEST DISTRICT
TAMPA

Dept. Of Environmental Protection
SEP 21 20..
Southwest District

PROFESSIONAL ENGINEER DATE
BRYAN ZOLLER, PE
FL. LICENSE #: 63933

GENERAL NOTES:

1. ANY U.S.C. AND G.S. MONUMENT, PUBLIC LAND CORNER, PROPERTY MONUMENTATION, OR BENCH MARK WITHIN LIMITS OF CONSTRUCTION SHALL BE PROTECTED. IF IN DANGER OF DAMAGE, THE CONTRACTOR SHOULD NOTIFY THE OWNER'S REPRESENTATIVE IMMEDIATELY AS WELL AS:

   GEODETIC INFORMATION CENTER
   ATTN.: MARK MAINTENANCE CENTER
   ATTN.: N/CG-162 6001 EXECUTIVE BLVD.
   ROCKVILLE, MARYLAND 20852
   (301) 443-8319

2. THE CONTRACTOR SHALL PROVIDE AT LEAST 72 HOURS NOTICE TO RELEVANT UTILITIES IN ADVANCE OF CONSTRUCTION. CONTACT SUNSHINE STATE ONE UTILITIES NOTIFICATION CENTER AT 1-800-432-4770. THE CONTRACTOR SHALL PROVIDE UTILITY COMPANIES ADEQUATE TIME TO RELOCATE ANY UTILITIES IN CONFLICT WITH PROPOSED CONSTRUCTION.

3. ALL WORK SHALL COMPLY WITH REGULATION AND ORDINANCES OF THE VARIOUS GOVERNMENTAL AGENCIES HAVING JURISDICTION OVER THE WORK.

4. THE INFORMATION PROVIDED IN THESE PLANS IS TO ASSIST THE CONTRACTOR IN ASSESSING THE NATURE AND EXTENT OF THE CONDITIONS WHICH MAY BE ENCOUNTERED DURING THE COURSE OF WORK. ALL CONTRACTORS ARE DIRECTED, PRIOR TO BIDDING, TO CONDUCT WHATEVER INVESTIGATIONS NECESSARY TO DETERMINE THE ACTUAL CONDITIONS THAT WILL BE ENCOUNTERED AND UPON WHICH THEIR BIDS WILL BE BASED.

5. ALL BACKFILL SHALL BE COMPACTED PER FDOT SPECIFICATIONS.

6. MATERIALS INTERFERING WITH CONSTRUCTION, AND ALL ABANDONED UTILITY LINES, PIPES, STRUCTURES AND ALL OTHER SUB TERRAIN OBJECTS TO BE REMOVED, SHALL BE DISPOSED OF AS DIRECTED BY THE OWNER'S REPRESENTATIVE.

7. MATERIALS AND CONSTRUCTION TO BE IN ACCORDANCE WITH THE FDOT STANDARD SPECIFICATIONS FOR ROAD AND BRIDGE CONSTRUCTION, LATEST EDITION USING ENGLISH SYSTEM.

8. GRADE THE SITE AND DITCHES TO THE FINISHED GRADES AND TYPICAL SECTIONS. IMMEDIATELY BEFORE REQUESTING FINAL INSPECTIONS, CHECK THE LINES AND DRESS TO THE PROPER CONTOURS. ALL AREAS ARE TO BE STABILIZED AND MAINTAINED UNTIL ACCEPTED BY THE OWNER.

9. THE CONTRACTOR SHALL NOTIFY THE OWNER'S REPRESENTATIVE IMMEDIATELY WHEN CONFLICTS BETWEEN DRAWINGS AND ACTUAL CONDITIONS ARE DISCOVERED.

10. FIELD CONDITIONS MAY NECESSITATE SLIGHT ALIGNMENT AND GRADE DEVIATION TO AVOID OBSTACLES, AS ORDERED BY THE OWNER'S REPRESENTATIVE.

11. LOCATION, ELEVATION, AND DIMENSIONS OF THE EXISTING UTILITIES, STRUCTURES, AND OTHER FEATURES ARE SHOWN IN ACCORDANCE WITH THE BEST INFORMATION AVAILABLE AT TIME OF THE PREPARATION OF THESE PLANS BUT DO NOT PURPORT TO BE ABSOLUTELY CORRECT.

12. THE CONTRACTOR SHALL VERIFY THE LOCATION, ELEVATION, AND DIMENSIONS OF ALL EXISTING UTILITIES, STRUCTURES, AND OTHER FEATURES AFFECTING HIS WORK AND SHALL COMPLY WITH ALL STATE, COUNTY, AND LOCAL ORDINANCES.

13. CONTRACTOR SHALL MAINTAIN A SET OF PLANS WITH CURRENT FIELD CHANGES MARKED THEREON AND SHALL DELIVER THESE PLANS TO THE OWNER'S REPRESENTATIVE UPON COMPLETION OF CONSTRUCTION. FINAL PAYMENT SHALL NOT BE MADE UNTIL THIS REQUIREMENT IS SATISFIED.

14. THE CONTRACTOR SHALL BE RESPONSIBLE FOR OBTAINING ANY PERMITS NOT PROVIDED BY THE ENGINEER, OWNER, OR OWNER'S REPRESENTATIVE THESE PERMITS MAY INCLUDE ROAD CROSSING, ONSITE DEWATERING, BURNING PERMITS, NPDES, EARTHMOVING, AND ANY OTHER PERMITS FROM GOVERNMENTAL AGENCIES HAVING JURISDICTION OVER THE PROJECT SITE.

15. THE CONTRACTOR SHALL ADHERE TO ALL CONDITIONS AND REQUIREMENTS OF ALL PERMITS WHICH HAVE BEEN OBTAINED. CONTRACTOR SHALL BE RESPONSIBLE FOR PAYMENT OF ANY FINES AND ADMINISTRATIVE COSTS INCURRED BY THE OWNER FOR PERMIT VIOLATIONS.

16. THE CONTRACTOR SHALL STABILIZE AND MAINTAIN ACCESS ROADS DURING CONTRUCTION AS NECESSARY FOR WORK ACCESS AND USE BY SARASOTA COUNTY STAFF FOR PROPERTY MANAGEMENT, SERVICE, AND FIRE PROTECTION. THESE ROADS SHALL BE RESTORED TO ORIGINAL CONDITION AFTER JOB COMPLETION IN AREAS DIRECTED BY THE OWNER'S REPRESENTATIVE.

17. THE OWNER'S SURVEYOR SHALL PROVIDE BENCH MARK AND COORDINATE CONTROL POINTS FOR THE CONTRACTOR. THE CONTRACTOR SHALL SUPPLY POINTS FOR LINE AND GRADE. THE CONTRACTOR SHALL BE RESPONSIBLE FOR THE COMPLETE STAKE-OUT OF THE PROJECT GRADE, SLOPE STAKING, MAINTENANCE OF STAKING, AND ANY RESTAKING THAT MAY BE REQUIRED TO COMPLETE THE PROJECT IN ACCORDANCE WITH THE PLANS AND SPECIFICATIONS. ANY AND ALL EXPENSES INCURRED FOR THE CONTRACTOR'S SURVEY WORK SHALL BE INCLUDED IN THE PRICE BID FOR APPLICABLE ITEMS. NO ADDITIONAL PAYMENT SHALL BE MADE FOR THIS WORK.

18. OVERALL CLEAN UP SHALL BE ACCOMPLISHED BY THE CONTRACTOR AS DIRECTED BY THE OWNER'S REPRESENTATIVE. ANY AND ALL EXPENSES INCURRED FOR THIS WORK SHALL BE INCLUDED IN THE UNIT PRICE BID FOR THE APPLICABLE LINE ITEMS. THE CONTRACTOR SHALL REMOVE ALL TRASH, DEBRIS, AND UNUSED MATERIALS ON A REGULAR BASIS TO KEEP WORK SITE CLEAN. MATERIALS REMOVED SHALL BE DISPOSED IN A LAWFUL MANNER.

19. THE CONTRACTOR SHALL ENDEAVOR TO PROTECT PRIVATE PROPERTY. ANY DAMAGE CAUSED BY THE CONTRACTOR IN THE PERFORMANCE OF HIS WORK SHALL BE CORRECTED TO THE SATISFACTION OF THE OWNER'S REPRESENTATIVE AT THE CONTRACTOR'S EXPENSE. PAYMENT SHALL NOT BE MADE FOR ANY RESTORATION WORK.

20. ANY DAMAGE TO STATE, COUNTY, OR LOCAL ROADS OR PROPERTY CAUSED BY THE CONTRACTOR'S HAULING OR EXCAVATION EQUIPMENT SHALL BE REPAIRED BY THE CONTRACTOR TO THE SATISFACTION OF THE OWNER'S REPRESENTATIVE OR FACILITY OWNER. PAYMENT SHALL NOT BE MADE FOR THIS WORK.

EROSION AND SEDIMENT CONTROL:

1. MAINTAIN WATER QUALITY STANDARDS PURSUANT TO SECTION 62-302 F.A.C.

2. THE CONTRACTOR SHALL INSTALL AND MAINTAIN EROSION CONTROL BARRIERS SUCH AS SILT SCREEN FENCING/FLOATING TURBIDITY BARRIERS, AS REQUIRED BY ACTUAL SITE CONDITIONS AND AS DIRECTED BY THE OWNER'S REPRESENTATIVE. THE MAINTENANCE OF EROSION CONTROL DEVICES AND THEIR COMPLETE REMOVAL ARE TO BE INCLUDED IN THE BID PRICE. THE SILT BARRIERS SHALL BE PLACED IN ACCORDANCE WITH THE REQUIREMENTS OF FDOT INDEX NO. 102 AND 103, OR AS DIRECTED BY THE OWNER'S REPRESENTATIVE. FAILURE TO INSTALL OR PROPERLY MAINTAIN THESE BARRIERS MAY RESULT IN ENFORCEMENT ACTIONS WHICH MAY INCLUDE CITATIONS, AS PROVIDED BY CHAPTERS 40D-A, AND 40D-40, F.A.C.

3. THE CONTRACTOR SHALL PROVIDE AND INSTALL HAY BALES AND/OR SILT SCREENS AND/OR SODDED BERMS TO PREVENT THE TRANSPORT OF SEDIMENT DOWNSTREAM INTO PRIVATE PROPERTY, OPEN DITCHES, SURFACE WATERS ETC. & MAINTAIN SUCH CONTROL DEVICES THROUGHOUT THE CONSTRUCTION.

4. EROSION AND SEDIMENT CONTROL DEVICES SHALL REMAIN IN PLACE AND SHALL NOT BE REMOVED UNTIL FINAL GRADING AND RESTORATION OF THE SITE HAS BEEN COMPLETED.

5. ALL AREAS DISTURBED DURING CONSTRUCTION SHALL BE RETURNED TO THE EXISTING GRADE, PROFILE, AND CROSS SECTION UNLESS OTHERWISE NOTED. MATCH EXISTING ELEVATIONS AT BOUNDARIES/LIMITS OF CONSTRUCTION ACTIVITIES.

6. THE CONTRACTOR SHALL BE RESPONSIBLE FOR THE MAINTENANCE OF THE EXISTING DRAINAGE SYSTEM WITHIN THE LIMITS OF THE PROJECT AREA, FOR THE DURATION OF THE PROJECT. NO ADDITIONAL PAYMENT WILL BE MADE FOR THE WORK INVOLVED.

7. THE CONTRACTOR SHALL DEVELOP AND IMPLEMENT A STORMWATER POLLUTION PREVENTION PLAN IN COMPLIANCE WITH NPDES STORMWATER PERMIT REQUIREMENTS.

8. THE CONTRACTOR SHALL SUBMIT A NOTICE OF INTENT OF CONSTRUCTION COMMENCEMENT AND NOTICE OF TERMINATION TO APPLICABLE AGENCIES AND MONITOR CONSTRUCTION IN ACCORDANCE WITH NPDES STORMWATER PERMIT REQUIREMENTS.

OWNER/APPLICANT
OPERATOR / MAINTENANCE ENTITY

FLORIDA DEPARTMENT OF ENVIRONMENTAL PROTECTION
SEP 21 2011
SOUTHWEST DISTRICT TAMPA

FRANK COGGINS
MANAGER SOLID WASTE OPERATIONS

POST, BUCKLEY, SCHUH & JERNIGAN, INC., D/B/A/
PBSJ
PRINCIPAL ADDRESS:
5300 W. CYPRESS SUITE 300
TAMPA, FL. 33607
FBPR CERT. OF AUTH. No. 24
PRODUCTION ADDRESS:
101 ARTHUR ANDERSEN
PARKWAY SUITE 260
SARASOTA, FLORIDA 34232
PHONE: (941) 378 - 0272

CLIENT:
SARASOTA COUNTY
ENVIRONMENTAL SERVICES
SOLID WASTE OPERATIONS
4000 KNIGHTS TRAIL ROAD
NOKOMIS, FLORIDA 34275

PROJECT:
CENTRAL COUNTY SOLID
WASTE DISPOSAL COMPLEX
BORROW FACILITY - PHASE IV

TASK:
GENERAL NOTES

ORIGINAL: SEPTEMBER 08
REVISIONS:
1 _____ 2 _____ 3 _____ 4 _____ 5 _____
6 _____ 7 _____ 8 _____ 9 _____ 10 _____ 11 _____ 12 _____

NOT VALID FOR CONSTRUCTION UNLESS SIGNED IN THIS BLOCK

PROFESSIONAL ENGINEER:
BRYAN ZOLLER, PE
FL. LICENSE #: 63933

JOB NO.: 100004629
DRAWN: BZ
DESIGNED: BZ
CHECKED: JE
QC: JE

SHEET 2

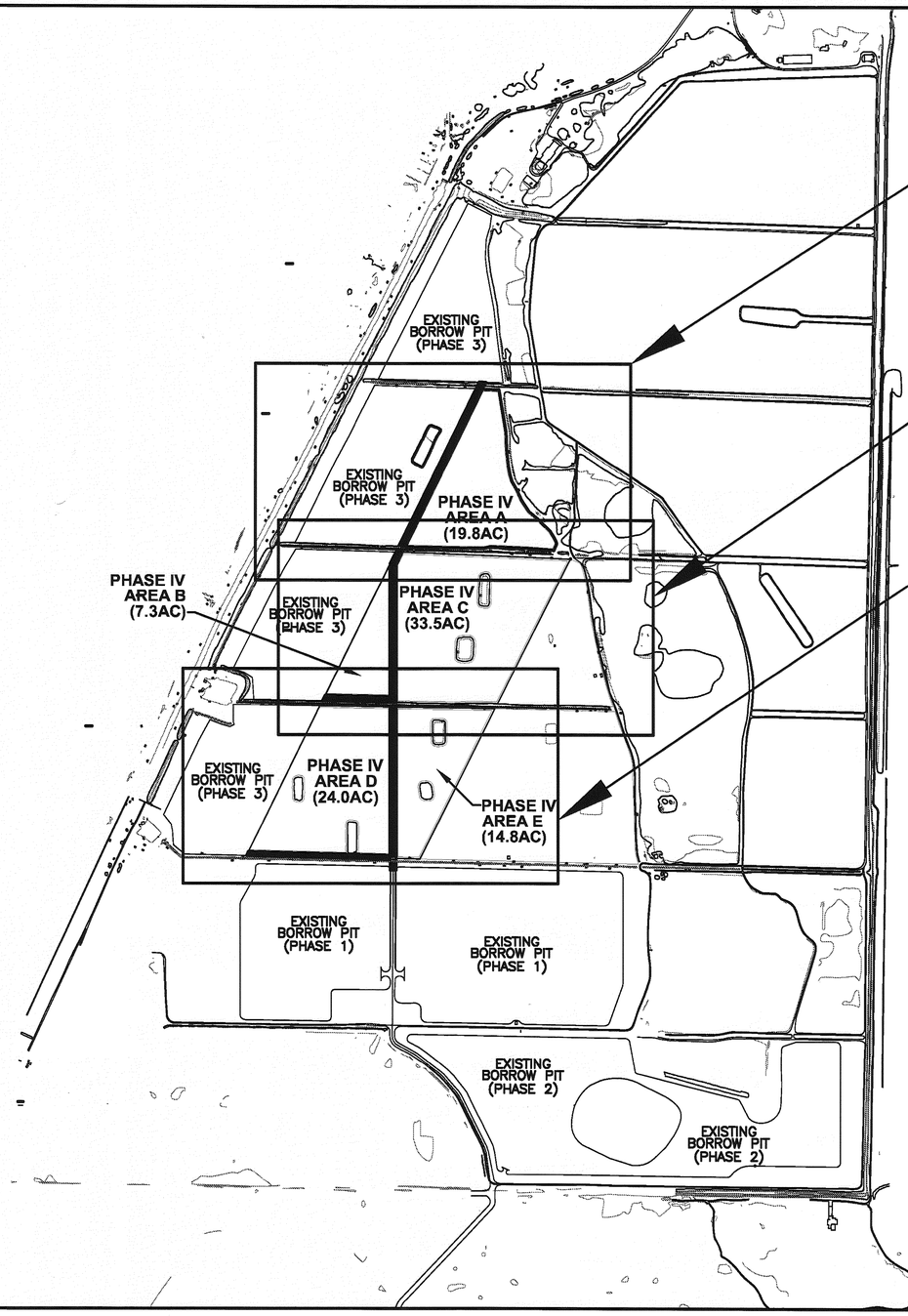

SHEET 4

SHEET 5

SHEET 6

N
W E
S
0' 600' 1200'
11" X 17" SHEET: 1" = 1200'
24" X 36" SHEET: 1" = 600'

FLORIDA DEPARTMENT OF ENVIRONMENTAL PROTECTION
SEP 21 2011
SOUTHWEST DISTRICT TAMPA

POST, BUCKLEY, SCHUH & JERNIGAN, INC., D/B/A/
PBSJ
PRINCIPAL ADDRESS:
5300 W. CYPRESS SUITE 300
TAMPA, FL. 33607
FBPR CERT. OF AUTH. No. 24
PRODUCTION ADDRESS:
101 ARTHUR ANDERSEN
PARKWAY SUITE 260
SARASOTA, FLORIDA 34232
PHONE: (941) 378 - 0272

CLIENT:
SARASOTA COUNTY
ENVIRONMENTAL SERVICES
SOLID WASTE OPERATIONS
4000 KNIGHTS TRAIL ROAD
NOKOMIS, FLORIDA 34275

PROJECT:
CENTRAL COUNTY SOLID
WASTE DISPOSAL COMPLEX
BORROW FACILITY - PHASE IV

TASK:
OVERALL SITE PLAN

ORIGINAL: SEPTEMBER 08
REVISIONS:
1
2
3
4
5
6
7
8
9
10
11
12

NOT VALID FOR CONSTRUCTION UNLESS SIGNED IN THIS BLOCK

PROFESSIONAL ENGINEER:
BRYAN ZOLLER, PE
FL. LICENSE #: 63933

JOB NO.: 100004629
DRAWN: BZ
DESIGNED: BZ
CHECKED: JE
QC: JE

SHEET 3

LEGEND:

- EXISTING SPOT ELEVATION / PROPOSED SPOT ELEVATION
- EXISTING FENCE
- EXISTING/PROPOSED FLOW ARROW
- EXISTING CONTOUR
- EXISTING WATER
- EXISTING ROAD / TRAIL
- EXISTING TREES / BRUSH
- PROPOSED SILT FENCE
- PROPOSED ACTIVITY
- C C PROPOSED CROSS SECTION

N W E S

0' 100' 200'

11" X 17" SHEET: 1" = 200'
24" X 36" SHEET: 1" = 100'

EXISTING PHASE III BORROW AREA "D"

EXISTING PHASE III BORROW AREA "C"

PROPOSED PHASE IV BORROW AREA "A"

COW PEN SLOUGH

W/S 6.9

PROPOSED 20LF FLOATING TURBIDITY BARRIER

EXISTING 60LF 48" RCP, INVERTS AT EXISTING BOT

SLOPE 4:1 (TYP)

TOB

TOS

PROPOSED SILT FENCE SEE SHEET 8

EXISTING HAUL ROAD, CONTRACTOR RESPONSIBLE FOR MAINTAINING.

50.0'

OWNER/APPLICANT
OPERATOR / MAINTENANCE ENTITY

SPENCER ANDERSON, PE
PROGRAM MANAGER

PROPOSED 20LF FLOATING TURBIDITY BARRIER

EXISTING 60LF 48" RCP, INVERTS AT EXISTING BOT (PHASE III)

NOTE:
1. TOP OF BANK LINES DELINEATE LIMITS OF CONSTRUCTION.

2. IF DEWATERING IS NEEDED, CONTRACTOR SHALL ULTIMATELY DISCHARGE ANY DEWATERING ACTIVITIES INTO THE PHASE III BORROW PIT AFTER ALL MEASURES HAVE BEEN TAKEN TO REMOVE ALL COLLOIDAL PARTICALS FROM THE WATER.

FLORIDA DEPARTMENT OF ENVIRONMENTAL PROTECTION
SEP 21 2011
SOUTHWEST DISTRICT
TAMPA

Oct 12, 2010 - 8:48am
User Name: 17281
Drawing Name: L:\SWR CO SW\ALBERTSON PHASE IV\DRAWINGS\DRAWINGS.dwg

POST, BUCKLEY, SCHUH & JERNIGAN, INC., D/B/A/
PBSJ
PRINCIPAL ADDRESS:
5300 W. CYPRESS SUITE 300
TAMPA, FL. 33607
FBPR CERT. OF AUTH. No. 24

PRODUCTION ADDRESS:
101 ARTHUR ANDERSEN
PARKWAY SUITE 260
SARASOTA, FLORIDA 34232
PHONE: (941) 378 - 0272

CLIENT:
SARASOTA COUNTY
ENVIRONMENTAL SERVICES
SOLID WASTE OPERATIONS
4000 KNIGHTS TRAIL ROAD
NOKOMIS, FLORIDA 34275

PROJECT:
CENTRAL COUNTY SOLID
WASTE DISPOSAL COMPLEX
BORROW FACILITY - PHASE IV

TASK:
SITE / DRAINAGE PLAN
BORROW AREA A

ORIGINAL: SEPTEMBER 08
REVISIONS:
1 2 3 4 5 6 7 8 9 10 11 12

NOT VALID FOR CONSTRUCTION UNLESS SIGNED IN THIS BLOCK

PROFESSIONAL ENGINEER:
BRYAN ZOLLER, PE
FL. LICENSE #: 63933

JOB NO.: 100004629
DRAWN: BZ
DESIGNED: BZ
CHECKED: JE
QC: JE
SHEET 4

NOTE:
1. TOP OF BANK LINES DELINEATE LIMITS OF CONSTRUCTION.

2. IF DEWATERING IS NEEDED, CONTRACTOR SHALL ULTIMATELY DISCHARGE ANY DEWATERING ACTIVITIES INTO THE PHASE III BORROW PIT AFTER ALL MEASURES HAVE BEEN TAKEN TO REMOVE ALL COLLOIDAL PARTICALS FROM THE WATER.

LEGEND:

- EXISTING SPOT ELEVATION / PROPOSED SPOT ELEVATION
- EXISTING FENCE
- EXISTING/PROPOSED FLOW ARROW
- EXISTING CONTOUR
- EXISTING WATER
- EXISTING ROAD / TRAIL
- EXISTING TREES / BRUSH
- PROPOSED SILT FENCE
- PROPOSED ACTIVITY
- C C PROPOSED CROSS SECTION

PROPOSED 20LF FLOATING TURBIDITY BARRIER

EXISTING 60LF 48" RCP INVERTS AT EXISTING BOT (PHASE III)

PROPOSED SILT FENCE SEE SHEET 8

EXISTING PHASE III BORROW AREA "B"

SLOPE 4:1

SLOPE 4:1

TOB

TOS

50.0'

PROPOSED PHASE IV BORROW AREA "B"

EXISTING HAUL ROAD. CONTRACTOR RESPONSIBLE FOR MAINTAINING.

EXISTING 60LF 48" RCP. INVERTS AT EXISTING BOT (PHASE III)

PROPOSED 20LF FLOATING TURBIDITY BARRIER

EXISTING AGRICULTURAL IMPOUNDMENT AREA "A" (0.31 AC) SEE CROSS SECTION SHEET 7

PROPOSED PHASE IV BORROW AREA "C"

W/S 12.9

W/S 12.1

EXISTING AGRICULTURAL IMPOUNDMENT AREA "B" (0.45AC) SEE CROSS SECTION SHEET 7

W/S 11.4

W/S 11.3

OWNER/APPLICANT
OPERATOR / MAINTENANCE ENTITY

N

W E S

0' 100' 200'

11" X 17" SHEET: 1" = 200'
24" X 36" SHEET: 1" = 100'

FLORIDA DEPARTMENT OF ENVIRONMENTAL PROTECTION
SEP 21 2011
SOUTHWEST DISTRICT TAMPA

SPENCER ANDERSON, PE
PROGRAM MANAGER

Oct 12, 2010 - 8:51am
User Name: 17281
Drawing Name: L:\SWI CO SW\ALBRITTON PHASE IV\DRAWINGS\DRAWINGS.dwg

POST, BUCKLEY, SCHUH & JERNIGAN, INC., D/B/A/
PBSJ

PRINCIPAL ADDRESS:
5300 W. CYPRESS SUITE 300
TAMPA, FL. 33607
FBPR CERT. OF AUTH. No. 24

PRODUCTION ADDRESS:
101 ARTHUR ANDERSEN
PARKWAY SUITE 260
SARASOTA, FLORIDA 34232
PHONE: (941) 378 - 0272

CLIENT:
SARASOTA COUNTY
ENVIRONMENTAL SERVICES
SOLID WASTE OPERATIONS
4000 KNIGHTS TRAIL ROAD
NOKOMIS, FLORIDA 34275

SARASOTA COUNTY 1921

PROJECT:
CENTRAL COUNTY SOLID
WASTE DISPOSAL COMPLEX
BORROW FACILITY - PHASE IV

TASK:
SITE / DRAINAGE PLAN
BORROW AREAS B & C

ORIGINAL: SEPTEMBER 08
REVISIONS:
1 2 3 4 5 6 7 8 9 10 11 12

NOT VALID FOR CONSTRUCTION UNLESS SIGNED IN THIS BLOCK.

PROFESSIONAL ENGINEER:
BRYAN ZOLLER, PE
FL. LICENSE #: 63933

JOB NO.: 100004629
DRAWN: BZ
DESIGNED: BZ
CHECKED: JE
QC: JE

SHEET 5

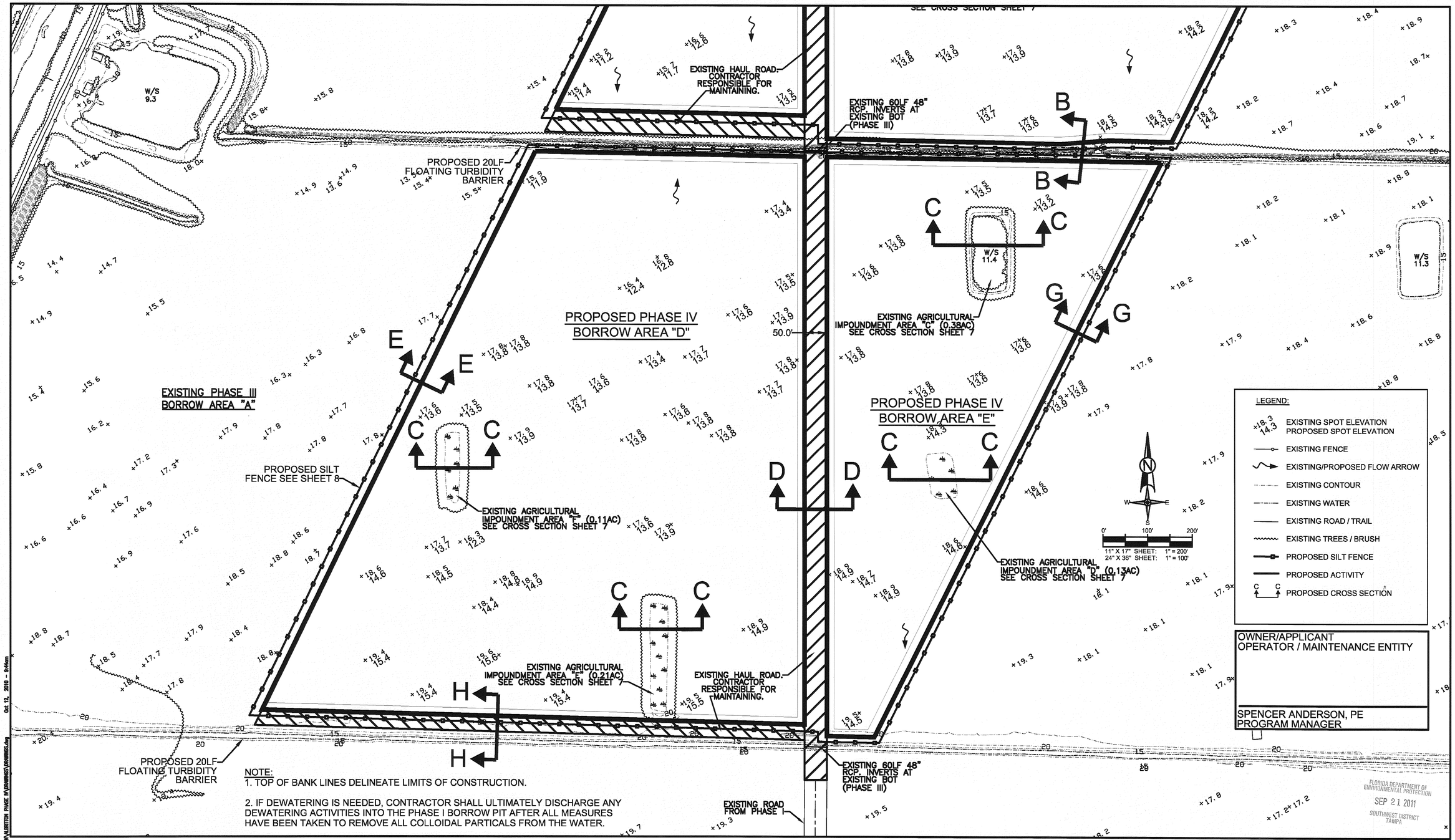

NOTE:
1. TOP OF BANK LINES DELINEATE LIMITS OF CONSTRUCTION.

2. IF DEWATERING IS NEEDED, CONTRACTOR SHALL ULTIMATELY DISCHARGE ANY DEWATERING ACTIVITIES INTO THE PHASE I BORROW PIT AFTER ALL MEASURES HAVE BEEN TAKEN TO REMOVE ALL COLLOIDAL PARTICALS FROM THE WATER.

POST, BUCKLEY, SCHUH & JERNIGAN, INC., D/B/A/
PBSJ

PRINCIPAL ADDRESS:
5300 W. CYPRESS SUITE 300
TAMPA, FL. 33607
FBPR CERT. OF AUTH. No. 24

PRODUCTION ADDRESS:
101 ARTHUR ANDERSEN
PARKWAY SUITE 260
SARASOTA, FLORIDA 34232
PHONE: (941) 378 - 0272

CLIENT:
SARASOTA COUNTY
ENVIRONMENTAL SERVICES
SOLID WASTE OPERATIONS
4000 KNIGHTS TRAIL ROAD
NOKOMIS, FLORIDA 34275

SARASOTA COUNTY 1921

PROJECT:	TASK:
CENTRAL COUNTY SOLID	SITE / DRAINAGE PLAN
WASTE DISPOSAL COMPLEX	BORROW AREAS D & E
BORROW FACILITY - PHASE IV	

ORIGINAL: SEPTEMBER 08
REVISIONS:
1
2
3
4
5
6
7
8
9
10
11
12

NOT VALID FOR CONSTRUCTION UNLESS SIGNED IN THIS BLOCK

PROFESSIONAL ENGINEER:
BRYAN ZOLLER, PE
FL. LICENSE #: 63933

JOB NO.:	100004629
DRAWN:	BZ
DESIGNED:	BZ
CHECKED:	JE
QC:	JE

SHEET 6

User Name: 17381
Drawing Name: L:\SNR CO SW\ALBRITTON\ALBRITTON PHASE IV\DRAWINGS\DRAWINGS.dwg
Oct 12, 2010 - 9:44am

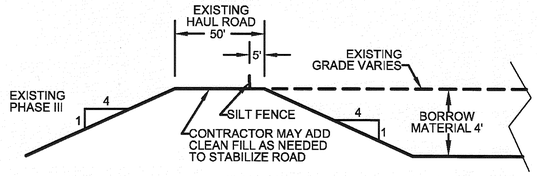

SECTION A-A
PROPOSED BORROW PIT
NTS

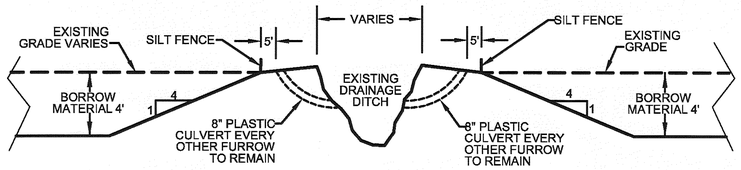

SECTION B-B
PROPOSED BORROW PIT
NTS

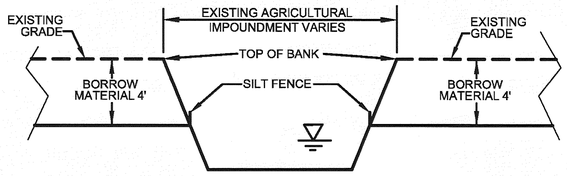

SECTION C-C
TYPICAL AGRICULTURAL
IMPOUNDMENT AREA CROSS SECTION
NTS

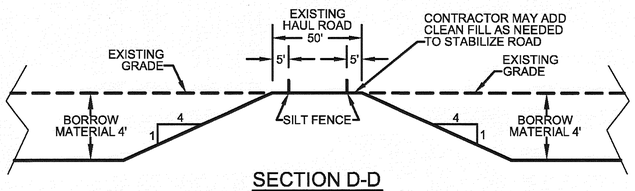

SECTION D-D
PROPOSED BORROW PIT
NTS

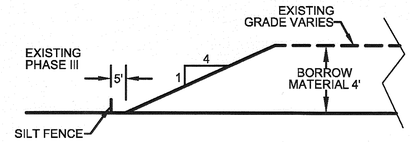

SECTION E-E
PROPOSED BORROW PIT
NTS

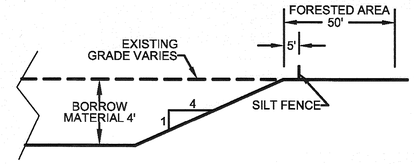

SECTION F-F
PROPOSED BORROW PIT
NTS

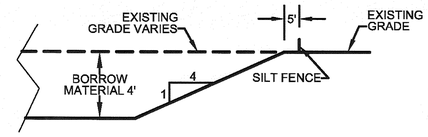

SECTION G-G
PROPOSED BORROW PIT
NTS

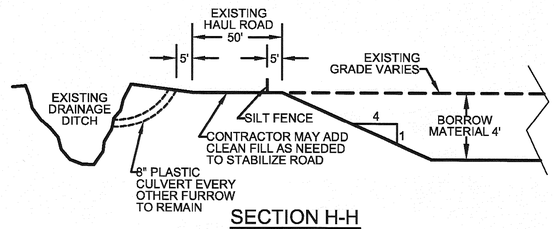

SECTION H-H
PROPOSED BORROW PIT
NTS

OWNER/APPLICANT
OPERATOR / MAINTENANCE ENTITY

SPENCER ANDERSON, PE
PROGRAM MANAGER

FLORIDA DEPARTMENT OF ENVIRONMENTAL PROTECTION
SEP 21 2011
SOUTHWEST DISTRICT
TAMPA

POST, BUCKLEY, SCHUH & JERNIGAN, INC., D/B/A/
PBSJ

PRINCIPAL ADDRESS:
5300 W. CYPRESS SUITE 300
TAMPA, FL. 33607
FBPR CERT. OF AUTH. No. 24

PRODUCTION ADDRESS:
101 ARTHUR ANDERSEN
PARKWAY SUITE 260
SARASOTA, FLORIDA 34232
PHONE: (941) 378 - 0272

CLIENT:
SARASOTA COUNTY
ENVIRONMENTAL SERVICES
SOLID WASTE OPERATIONS
4000 KNIGHTS TRAIL ROAD
NOKOMIS, FLORIDA 34275

SARASOTA COUNTY 1921

PROJECT:
CENTRAL COUNTY SOLID
WASTE DISPOSAL COMPLEX
BORROW FACILITY - PHASE IV

TASK:
CROSS SECTIONS

ORIGINAL: SEPTEMBER 08
REVISIONS:
1
2
3
4
5
6
7
8
9
10
11
12

NOT VALID FOR CONSTRUCTION UNLESS SIGNED IN THIS BLOCK

PROFESSIONAL ENGINEER:
BRYAN ZOLLER, PE
FL. LICENSE #: 63933

JOB NO.:	100004629
DRAWN:	BZ
DESIGNED:	BZ
CHECKED:	JE
QC:	JE

SHEET 7

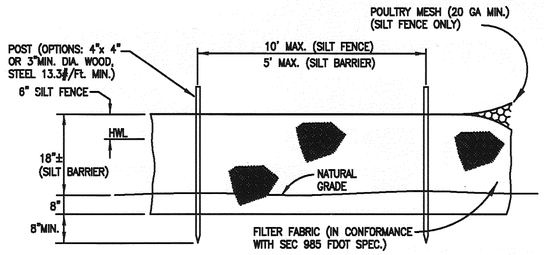

ELEVATION

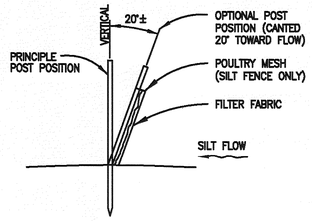

SECTION

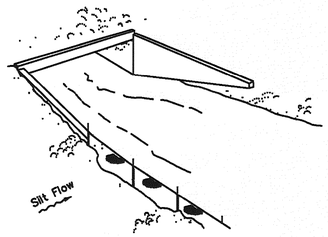

Type III Silt Fence

Note: Spacing for Type III Fence to be in accordance with Chart I, Sheet 1 of 3 and ditch installations at drainage structures Sheet 2 of 3.
FDOT DESIGN STANDARDS, 2004, INDEX 102

Type III Silt Fence

TYPICAL SILT FENCE AND STAKED SILT BARRIER

N.T.S.

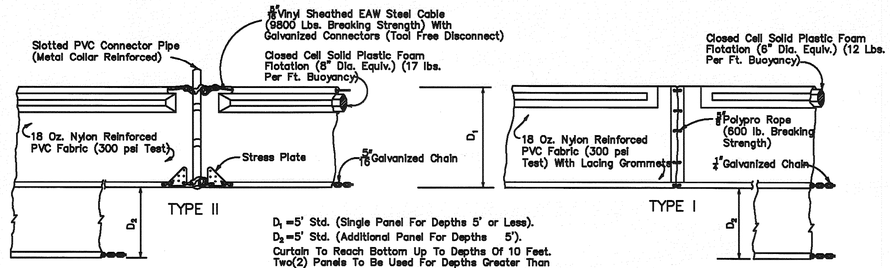

D_1 =5' Std. (Single Panel For Depths 5' or Less).
D_2 =5' Std. (Additional Panel For Depths 5').
Curtain To Reach Bottom Up To Depths Of 10 Feet.
Two(2) Panels To Be Used For Depths Greater Than
10 Feet Unless Special Depth Curtains Specifically Called
For In The Plans Or As Determined By The Engineer.

NOTICE: COMPONENTS OF TYPES I AND II MAY BE SIMILAR OR IDENTICAL TO PROPRIETARY DESIGNS. ANY INFRINGEMENT ON THE PROPRIETARY RIGHTS OF THE DESIGNER SHALL BE THE SOLE RESPONSIBILITY OF THE USER. SUBSTITUTIONS FOR TYPES I AND II SHALL BE AS APPROVED BY THE ENGINEER.

FLOATING TURBIDITY BARRIERS

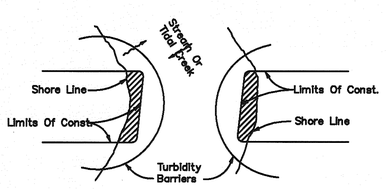

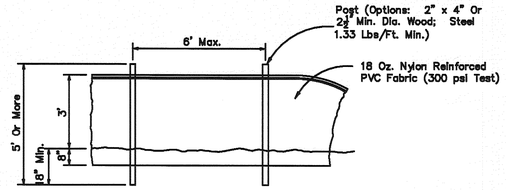

STAKED TURBIDITY BARRIER

NOTES:
1. Turbidity barriers are to be used in all permanent bodies of water regardless of water depth.
2. Number and spacing of anchors dependent on current velocities.
3. Deployment of barrier around pile locations may vary to accommodate construction operations.
4. Navigation may require segmenting barrier during construction operations.
5. For additional information see Section 104 of the FDOT Standard Specifications,2004 .
6. Floating turbidity barriers are to be paid for under the contract unit price for Floating Turbidity Barrier, LF.
7. Staked turbidity barriers are to be paid for under the contract unit price for Staked Turbidity Barrier, LF.

NOTE:
Turbidity barriers for flowing streams and tidal creeks may be either floating, or staked types or any combinations of types that will suit site conditions and meet erosion control and water quality requirements. The barrier type(s) will be at the Contractors option unless otherwise specified in the plans, however payment will be under the pay item(s) established in the plans for Floating Turbidity Barrier and/or Staked Turbidity Barrier. Posts in staked turbidity barriers to be installed in vertical position unless otherwise directed by the Engineer.

TURBIDITY BARRIER APPLICATIONS

OWNER/APPLICANT
OPERATOR / MAINTENANCE ENTITY

FLORIDA DEPARTMENT OF ENVIRONMENTAL PROTECTION
SEP 21 2011
SOUTHWEST DISTRICT TAMPA

SPENCER ANDERSON, PE
PROGRAM MANAGER

POST, BUCKLEY, SCHUH & JERNIGAN, INC., D/B/A/
PBS&J
PRINCIPAL ADDRESS:
5300 W. CYPRESS SUITE 300
TAMPA, FL. 33607
FBPR CERT. OF AUTH. No. 24
PRODUCTION ADDRESS:
101 ARTHUR ANDERSEN
PARKWAY SUITE 260
SARASOTA, FLORIDA 34232
PHONE: (941) 378 - 0272

CLIENT:
SARASOTA COUNTY
ENVIRONMENTAL SERVICES
SOLID WASTE OPERATIONS
4000 KNIGHTS TRAIL ROAD
NOKOMIS, FLORIDA 34275

PROJECT:
CENTRAL COUNTY SOLID
WASTE DISPOSAL COMPLEX
BORROW FACILITY - PHASE IV

TASK:
EROSION AND SEDIMENT CONTROL

ORIGINAL: SEPTEMBER 08
REVISIONS:
1 2 3 4 5 6 7 8 9 10 11 12

NOT VALID FOR CONSTRUCTION UNLESS SIGNED IN THIS BLOCK

PROFESSIONAL ENGINEER:
BRYAN ZOLLER PE
FL. LICENSE #: 63933

JOB NO.: 100004629
DRAWN: BZ
DESIGNED: BZ
CHECKED: JE
QC: JE

SHEET 8

User Name: 17281
Drawing Name: L:\SWA CO SW\ILLUSTRATION\ILLUSTRATION PHASE IV\DRAWINGS\DRAWINGS.dwg Mar 03, 2009 - 8:48am

CONSTRUCTION PLANS FOR

CENTRAL COUNTY SOLID WASTE DISPOSAL COMPLEX BORROW FACILITY - PHASE V

SECTION - 34 TOWNSHIP - 37S RANGE - 19E

VICINITY MAP

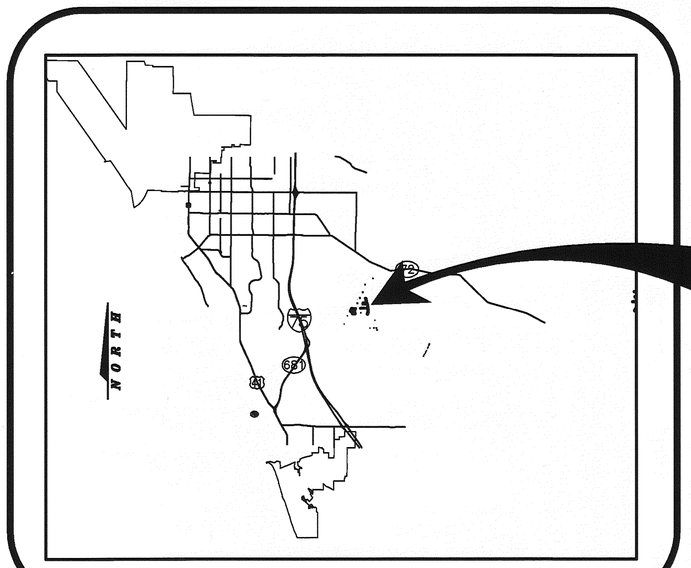

PROJECT LOCATION

INDEX

SHT. NO.	TITLE
1	COVER SHEET
2	GENERAL NOTES
3	OVERALL SITE PLAN & KEY SHEET
4	SITE / DRAINAGE PLAN - BORROW AREA A
5	SITE / DRAINAGE PLAN - BORROW AREA B
6	SITE / DRAINAGE PLAN - BORROW AREA C
7	SITE / DRAINAGE PLAN - BORROW AREA D
8	CROSS SECTIONS
9	EROSION & SEDIMENT CONTROL

PREPARED FOR

SARASOTA COUNTY ENVIRONMENTAL SERVICES SOLID WASTE OPERATIONS

4000 KNIGHTS TRAIL ROAD
NOKOMIS, FLORIDA 34275

PREPARED BY

PBS&J

PRINCIPAL OFFICE
5300 WEST CYPRESS STREET
TAMPA, FLORIDA 33607
FBPR CERT. OF AUTH. # 24

PRODUCTION OFFICE
101 ARTHUR ANDERSEN PARKWAY SUITE 260
SARASOTA, FLORIDA 34232
PHONE: (941) 378 - 0272

FLORIDA DEPARTMENT OF ENVIRONMENTAL PROTECTION
SEP 21 2011
SOUTHWEST DISTRICT TAMPA

PROFESSIONAL ENGINEER DATE
BRYAN ZOLLER, PE
FL. LICENSE #: 63933

GENERAL NOTES:

1. ANY U.S.C. AND G.S. MONUMENT, PUBLIC LAND CORNER, PROPERTY MONUMENTATION, OR BENCH MARK WITHIN LIMITS OF CONSTRUCTION SHALL BE PROTECTED. IF IN DANGER OF DAMAGE, THE CONTRACTOR SHOULD NOTIFY THE OWNER'S REPRESENTATIVE IMMEDIATELY AS WELL AS:

   GEODETIC INFORMATION CENTER
   ATTN.: MARK MAINTENANCE CENTER
   ATTN.: N/CG-162 6001 EXECUTIVE BLVD.
   ROCKVILLE, MARYLAND 20852
   (301) 443-8319

2. THE CONTRACTOR SHALL PROVIDE AT LEAST 72 HOURS NOTICE TO RELEVANT UTILITIES IN ADVANCE OF CONSTRUCTION. CONTACT SUNSHINE STATE ONE UTILITIES NOTIFICATION CENTER AT 1-800-432-4770. THE CONTRACTOR SHALL PROVIDE UTILITY COMPANIES ADEQUATE TIME TO RELOCATE ANY UTILITIES IN CONFLICT WITH PROPOSED CONSTRUCTION.

3. ALL WORK SHALL COMPLY WITH REGULATION AND ORDINANCES OF THE VARIOUS GOVERNMENTAL AGENCIES HAVING JURISDICTION OVER THE WORK.

4. THE INFORMATION PROVIDED IN THESE PLANS IS TO ASSIST THE CONTRACTOR IN ASSESSING THE NATURE AND EXTENT OF THE CONDITIONS WHICH MAY BE ENCOUNTERED DURING THE COURSE OF WORK. ALL CONTRACTORS ARE DIRECTED, PRIOR TO BIDDING, TO CONDUCT WHATEVER INVESTIGATIONS NECESSARY TO DETERMINE THE ACTUAL CONDITIONS THAT WILL BE ENCOUNTERED AND UPON WHICH THEIR BIDS WILL BE BASED.

5. ALL BACKFILL SHALL BE COMPACTED PER FDOT SPECIFICATIONS.

6. MATERIALS INTERFERING WITH CONSTRUCTION, AND ALL ABANDONED UTILITY LINES, PIPES, STRUCTURES AND ALL OTHER SUB TERRAIN OBJECTS TO BE REMOVED, SHALL BE DISPOSED OF AS DIRECTED BY THE OWNER'S REPRESENTATIVE.

7. MATERIALS AND CONSTRUCTION TO BE IN ACCORDANCE WITH THE FDOT STANDARD SPECIFICATIONS FOR ROAD AND BRIDGE CONSTRUCTION, LATEST EDITION USING ENGLISH SYSTEM.

8. GRADE THE SITE AND DITCHES TO THE FINISHED GRADES AND TYPICAL SECTIONS. IMMEDIATELY BEFORE REQUESTING FINAL INSPECTIONS, CHECK THE LINES AND DRESS TO THE PROPER CONTOURS. ALL AREAS ARE TO BE STABILIZED AND MAINTAINED UNTIL ACCEPTED BY THE OWNER.

9. THE CONTRACTOR SHALL NOTIFY THE OWNER'S REPRESENTATIVE IMMEDIATELY WHEN CONFLICTS BETWEEN DRAWINGS AND ACTUAL CONDITIONS ARE DISCOVERED.

10. FIELD CONDITIONS MAY NECESSITATE SLIGHT ALIGNMENT AND GRADE DEVIATION TO AVOID OBSTACLES, AS ORDERED BY THE OWNER'S REPRESENTATIVE.

11. LOCATION, ELEVATION, AND DIMENSIONS OF THE EXISTING UTILITIES, STRUCTURES, AND OTHER FEATURES ARE SHOWN IN ACCORDANCE WITH THE BEST INFORMATION AVAILABLE AT TIME OF THE PREPARATION OF THESE PLANS BUT DO NOT PURPORT TO BE ABSOLUTELY CORRECT.

12. THE CONTRACTOR SHALL VERIFY THE LOCATION, ELEVATION, AND DIMENSIONS OF ALL EXISTING UTILITIES, STRUCTURES, AND OTHER FEATURES AFFECTING HIS WORK AND SHALL COMPLY WITH ALL STATE, COUNTY, AND LOCAL ORDINANCES.

13. CONTRACTOR SHALL MAINTAIN A SET OF PLANS WITH CURRENT FIELD CHANGES MARKED THEREON AND SHALL DELIVER THESE PLANS TO THE OWNER'S REPRESENTATIVE UPON COMPLETION OF CONSTRUCTION. FINAL PAYMENT SHALL NOT BE MADE UNTIL THIS REQUIREMENT IS SATISFIED.

14. THE CONTRACTOR SHALL BE RESPONSIBLE FOR OBTAINING ANY PERMITS NOT PROVIDED BY THE ENGINEER, OWNER, OR OWNER'S REPRESENTATIVE THESE PERMITS MAY INCLUDE ROAD CROSSING, ONSITE DEWATERING, BURNING PERMITS, NPDES, EARTHMOVING, AND ANY OTHER PERMITS FROM GOVERNMENTAL AGENCIES HAVING JURISDICTION OVER THE PROJECT SITE.

15. THE CONTRACTOR SHALL ADHERE TO ALL CONDITIONS AND REQUIREMENTS OF ALL PERMITS WHICH HAVE BEEN OBTAINED. CONTRACTOR SHALL BE RESPONSIBLE FOR PAYMENT OF ANY FINES AND ADMINISTRATIVE COSTS INCURRED BY THE OWNER FOR PERMIT VIOLATIONS.

16. THE CONTRACTOR SHALL STABILIZE AND MAINTAIN ACCESS ROADS DURING CONTRUCTION AS NECESSARY FOR WORK ACCESS AND USE BY SARASOTA COUNTY STAFF FOR PROPERTY MANAGEMENT, SERVICE, AND FIRE PROTECTION. THESE ROADS SHALL BE RESTORED TO ORIGINAL CONDITION AFTER JOB COMPLETION IN AREAS DIRECTED BY THE OWNER'S REPRESENTATIVE.

17. THE OWNER'S SURVEYOR SHALL PROVIDE BENCH MARK AND COORDINATE CONTROL POINTS FOR THE CONTRACTOR. THE CONTRACTOR SHALL SUPPLY POINTS FOR LINE AND GRADE. THE CONTRACTOR SHALL BE RESPONSIBLE FOR THE COMPLETE STAKE-OUT OF THE PROJECT GRADE, SLOPE STAKING, MAINTENANCE OF STAKING, AND ANY RESTAKING THAT MAY BE REQUIRED TO COMPLETE THE PROJECT IN ACCORDANCE WITH THE PLANS AND SPECIFICATIONS. ANY AND ALL EXPENSES INCURRED FOR THE CONTRACTOR'S SURVEY WORK SHALL BE INCLUDED IN THE PRICE BID FOR APPLICABLE ITEMS. NO ADDITIONAL PAYMENT SHALL BE MADE FOR THIS WORK.

18. OVERALL CLEAN UP SHALL BE ACCOMPLISHED BY THE CONTRACTOR AS DIRECTED BY THE OWNER'S REPRESENTATIVE. ANY AND ALL EXPENSES INCURRED FOR THIS WORK SHALL BE INCLUDED IN THE UNIT PRICE BID FOR THE APPLICABLE LINE ITEMS. THE CONTRACTOR SHALL REMOVE ALL TRASH, DEBRIS, AND UNUSED MATERIALS ON A REGULAR BASIS TO KEEP WORK SITE CLEAN. MATERIALS REMOVED SHALL BE DISPOSED IN A LAWFUL MANNER.

19. THE CONTRACTOR SHALL ENDEAVOR TO PROTECT PRIVATE PROPERTY. ANY DAMAGE CAUSED BY THE CONTRACTOR IN THE PERFORMANCE OF HIS WORK SHALL BE CORRECTED TO THE SATISFACTION OF THE OWNER'S REPRESENTATIVE AT THE CONTRACTOR'S EXPENSE. PAYMENT SHALL NOT BE MADE FOR ANY RESTORATION WORK.

20. ANY DAMAGE TO STATE, COUNTY, OR LOCAL ROADS OR PROPERTY CAUSED BY THE CONTRACTOR'S HAULING OR EXCAVATION EQUIPMENT SHALL BE REPAIRED BY THE CONTRACTOR TO THE SATISFACTION OF THE OWNER'S REPRESENTATIVE OR FACILITY OWNER. PAYMENT SHALL NOT BE MADE FOR THIS WORK.

EROSION AND SEDIMENT CONTROL:

1. MAINTAIN WATER QUALITY STANDARDS PURSUANT TO SECTION 62-302 F.A.C.

2. THE CONTRACTOR SHALL INSTALL AND MAINTAIN EROSION CONTROL BARRIERS SUCH AS SILT SCREEN FENCING/FLOATING TURBIDITY BARRIERS, AS REQUIRED BY ACTUAL SITE CONDITIONS AND AS DIRECTED BY THE OWNER'S REPRESENTATIVE. THE MAINTENANCE OF EROSION CONTROL DEVICES AND THEIR COMPLETE REMOVAL ARE TO BE INCLUDED IN THE BID PRICE. THE SILT BARRIERS SHALL BE PLACED IN ACCORDANCE WITH THE REQUIREMENTS OF FDOT INDEX NO. 102 AND 103, OR AS DIRECTED BY THE OWNER'S REPRESENTATIVE. FAILURE TO INSTALL OR PROPERLY MAINTAIN THESE BARRIERS MAY RESULT IN ENFORCEMENT ACTIONS WHICH MAY INCLUDE CITATIONS, AS PROVIDED BY CHAPTERS 40D-A, AND 40D-40, F.A.C.

3. THE CONTRACTOR SHALL PROVIDE AND INSTALL HAY BALES AND/OR SILT SCREENS AND/OR SODDED BERMS TO PREVENT THE TRANSPORT OF SEDIMENT DOWNSTREAM INTO PRIVATE PROPERTY, OPEN DITCHES, SURFACE WATERS ETC. & MAINTAIN SUCH CONTROL DEVICES THROUGHOUT THE CONSTRUCTION.

4. EROSION AND SEDIMENT CONTROL DEVICES SHALL REMAIN IN PLACE AND SHALL NOT BE REMOVED UNTIL FINAL GRADING AND RESTORATION OF THE SITE HAS BEEN COMPLETED.

5. ALL AREAS DISTURBED DURING CONSTRUCTION SHALL BE RETURNED TO THE EXISTING GRADE, PROFILE, AND CROSS SECTION UNLESS OTHERWISE NOTED. MATCH EXISTING ELEVATIONS AT BOUNDARIES/LIMITS OF CONSTRUCTION ACTIVITIES.

6. THE CONTRACTOR SHALL BE RESPONSIBLE FOR THE MAINTENANCE OF THE EXISTING DRAINAGE SYSTEM WITHIN THE LIMITS OF THE PROJECT AREA, FOR THE DURATION OF THE PROJECT. NO ADDITIONAL PAYMENT WILL BE MADE FOR THE WORK INVOLVED.

7. THE CONTRACTOR SHALL DEVELOP AND IMPLEMENT A STORMWATER POLLUTION PREVENTION PLAN IN COMPLIANCE WITH NPDES STORMWATER PERMIT REQUIREMENTS.

8. THE CONTRACTOR SHALL SUBMIT A NOTICE OF INTENT OF CONSTRUCTION COMMENCEMENT AND NOTICE OF TERMINATION TO APPLICABLE AGENCIES AND MONITOR CONSTRUCTION IN ACCORDANCE WITH NPDES STORMWATER PERMIT REQUIREMENTS.

OWNER/APPLICANT
OPERATOR / MAINTENANCE ENTITY

FLORIDA DEPARTMENT OF ENVIRONMENTAL PROTECTION
SEP 21 2011
SOUTHWEST DISTRICT TAMPA

SPENCER ANDERSON, PE
PROGRAM MANAGER

POST, BUCKLEY, SCHUH & JERNIGAN, INC., D/B/A/
PBSJ
PRINCIPAL ADDRESS:
5300 W. CYPRESS SUITE 300
TAMPA, FL. 33607
FBPR CERT. OF AUTH. No. 24
PRODUCTION ADDRESS:
101 ARTHUR ANDERSEN PARKWAY SUITE 260
SARASOTA, FLORIDA 34232
PHONE: (941) 378 - 0272

CLIENT:
SARASOTA COUNTY
ENVIRONMENTAL SERVICES
SOLID WASTE OPERATIONS
4000 KNIGHTS TRAIL ROAD
NOKOMIS, FLORIDA 34275

PROJECT:
CENTRAL COUNTY SOLID
WASTE DISPOSAL COMPLEX
BORROW FACILITY - PHASE V

TASK:
GENERAL NOTES

ORIGINAL: SEPTEMBER 08
REVISIONS:
1 _____ 2 _____ 3 _____ 4 _____ 5 _____
6 _____ 7 _____ 8 _____ 9 _____ 10 _____ 11 _____ 12 _____

NOT VALID FOR CONSTRUCTION UNLESS SIGNED IN THIS BLOCK

PROFESSIONAL ENGINEER:
BRYAN ZOLLER, PE
FL. LICENSE #: 63933

JOB NO.: 100007426
DRAWN: BZ
DESIGNED: BZ
CHECKED: JE
QC: CS

SHEET 2

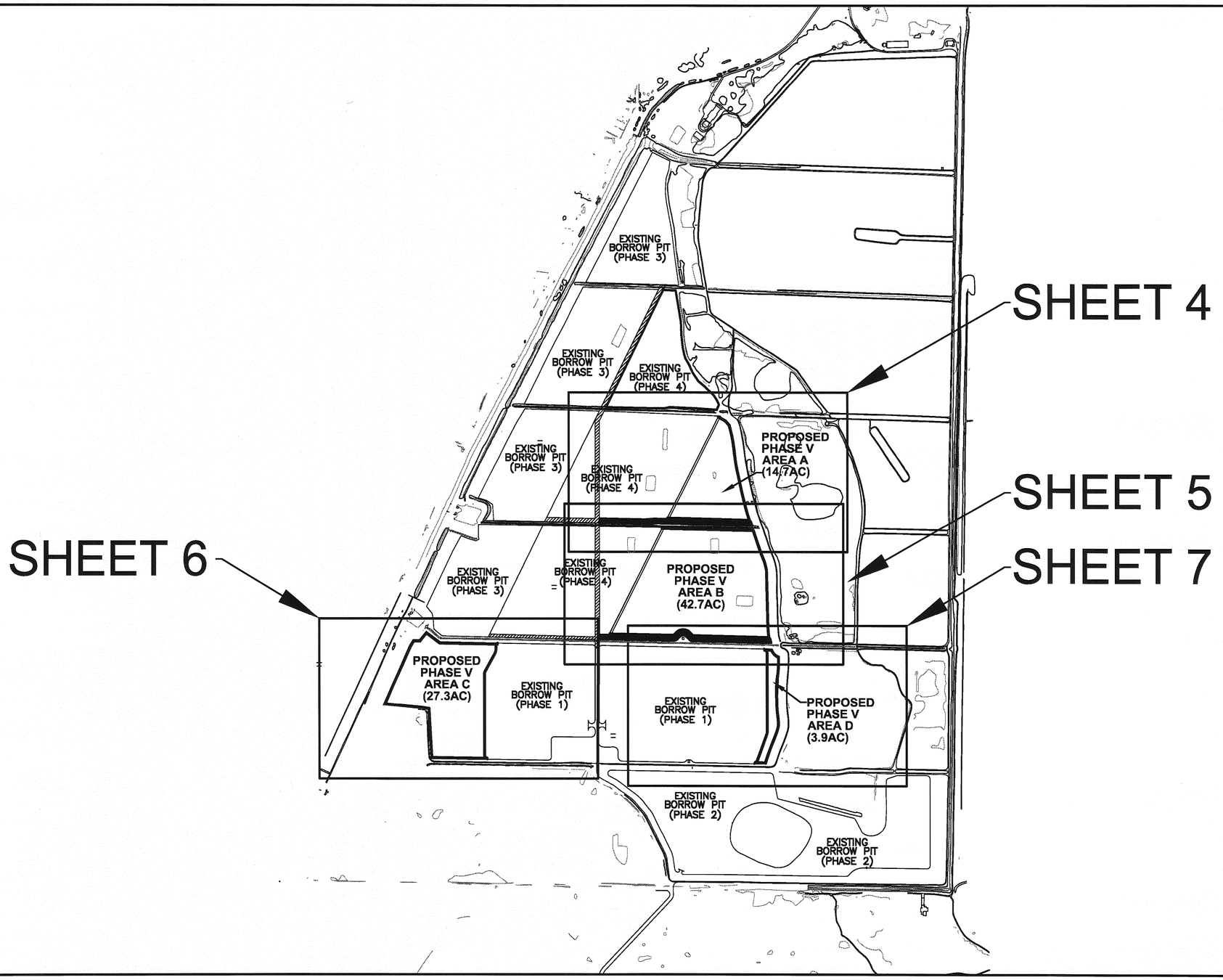

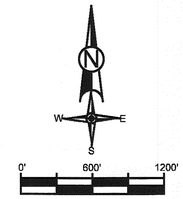

FLORIDA DEPARTMENT OF ENVIRONMENTAL PROTECTION
SEP 21 2011
SOUTHWEST DISTRICT TAMPA

POST, BUCKLEY, SCHUH & JERNIGAN, INC., D/B/A/
PBSJ
PRINCIPAL ADDRESS:
5300 W. CYPRESS SUITE 300
TAMPA, FL. 33607
FBPR CERT. OF AUTH. No. 24
PRODUCTION ADDRESS:
101 ARTHUR ANDERSEN
PARKWAY SUITE 260
SARASOTA, FLORIDA 34232
PHONE: (941) 378 - 0272

CLIENT:
SARASOTA COUNTY
ENVIRONMENTAL SERVICES
SOLID WASTE OPERATIONS
4000 KNIGHTS TRAIL ROAD
NOKOMIS, FLORIDA 34275

PROJECT:
CENTRAL COUNTY SOLID
WASTE DISPOSAL COMPLEX
BORROW FACILITY - PHASE V

TASK:
OVERALL SITE PLAN & KEY SHEET

ORIGINAL: SEPTEMBER 08
REVISIONS:
1
2
3
4
5
6
7
8
9
10
11
12

NOT VALID FOR CONSTRUCTION UNLESS SIGNED IN THIS BLOCK

PROFESSIONAL ENGINEER:
BRYAN ZOLLER, PE
FL. LICENSE #: 63933

JOB NO.: 100007426
DRAWN: BZ
DESIGNED: BZ
CHECKED: JE
QC: CS

SHEET 3

NOTE:
1. TOP OF BANK LINES DELINEATE LIMITS OF CONSTRUCTION.

2. IF DEWATERING IS NEEDED, CONTRACTOR SHALL ULTIMATELY DISCHARGE ANY DEWATERING ACTIVITIES INTO THE PHASE I BORROW PIT AFTER ALL MEASURES HAVE BEEN TAKEN TO REMOVE ALL COLLOIDAL PARTICALS.

LEGEND:

- EXISTING SPOT ELEVATION / PROPOSED SPOT ELEVATION
- EXISTING FENCE
- EXISTING/PROPOSED FLOW ARROW
- EXISTING CONTOUR
- EXISTING WATER
- EXISTING TREES / BRUSH
- EXISTING BORROW AREA
- PROPOSED ACTIVITY
- PROPOSED CROSS SECTION

PROPOSED 20LF FLOATING TURBIDITY BARRIER SEE DETAIL SHEET 9

EXISTING 60LF 48" RCP (PHASE III)

EXISTING PHASE III BORROW AREA "B"

EXISTING PHASE IV BORROW AREA "C"

PROPOSED PHASE V BORROW AREA "A"

PROPOSED SILT FENCE SEE SHEET 8

EXISTING PHASE IV BORROW AREA "B"

EXISTING HAUL ROAD. CONTRACTOR RESPONSIBLE FOR MAINTAINING

EXISTING AGRICULTURAL IMPOUNDMENT AREA "A" (0.21 AC) SEE CROSS SECTION SHEET 8

PROPOSED HAUL ROAD. CONTRACTOR RESPONSIBLE FOR MAINTAINING

W/S 12.9

W/S 12.1

W/S 11.4

A A

B B

C C

D D

N

W E

S

0' 100' 200'

OWNER/APPLICANT OPERATOR / MAINTENANCE ENTITY

SPENCER ANDERSON, PE
PROGRAM MANAGER

FLORIDA DEPARTMENT OF ENVIRONMENTAL PROTECTION
SEP 21 2011
SOUTHWEST DISTRICT
TAMPA

POST, BUCKLEY, SCHUH & JERNIGAN, INC., D/B/A/ PBSJ

PRINCIPAL ADDRESS:
5300 W. CYPRESS SUITE 300
TAMPA, FL. 33607
FBPR CERT. OF AUTH. No. 24

PRODUCTION ADDRESS:
101 ARTHUR ANDERSEN
PARKWAY SUITE 260
SARASOTA, FLORIDA 34232
PHONE: (941) 378 - 0272

CLIENT:
SARASOTA COUNTY
ENVIRONMENTAL SERVICES
SOLID WASTE OPERATIONS
4000 KNIGHTS TRAIL ROAD
NOKOMIS, FLORIDA 34275

PROJECT:
CENTRAL COUNTY SOLID
WASTE DISPOSAL COMPLEX
BORROW FACILITY - PHASE V

TASK:
SITE / DRAINAGE PLAN
BORROW AREA A

ORIGINAL: SEPTEMBER 08
REVISIONS:
1 _____ 2 _____ 3 _____ 4 _____ 5 _____ 6 _____ 7 _____ 8 _____ 9 _____ 10 _____ 11 _____ 12 _____

NOT VALID FOR CONSTRUCTION UNLESS SIGNED IN THIS BLOCK

PROFESSIONAL ENGINEER:
BRYAN ZOLLER, PE
FL. LICENSE #: 63933

JOB NO.: 100007426
DRAWN: BZ
DESIGNED: BZ
CHECKED: JE
QC: CS

SHEET 4

PROPOSED HAUL ROAD. CONTRACTOR RESPONSIBLE FOR MAINTAINING

PROPOSED 20LF FLOATING TURBIDITY BARRIER SEE DETAIL SHEET 9

EXISTING 60LF 48" RCP (PHASE III)

OWNER/APPLICANT
OPERATOR / MAINTENANCE ENTITY

SPENCER ANDERSON, PE
PROGRAM MANAGER

LEGEND:

- EXISTING SPOT ELEVATION / PROPOSED SPOT ELEVATION
- EXISTING FENCE
- EXISTING/PROPOSED FLOW ARROW
- EXISTING CONTOUR
- EXISTING WATER
- EXISTING TREES / BRUSH
- EXISTING BORROW AREA
- PROPOSED ACTIVITY
- PROPOSED CROSS SECTION

EXISTING PHASE IV BORROW AREA "E"

EXISTING HAUL ROAD. CONTRACTOR RESPONSIBLE FOR MAINTAINING

PROPOSED PHASE V BORROW AREA "B"

EXISTING AGRICULTURAL IMPOUNDMENT AREA "B" (0.42AC) SEE CROSS SECTION SHEET 8

EXISTING AGRICULTURAL IMPOUNDMENT AREA "C" (0.54AC) SEE CROSS SECTION SHEET 8

EXISTING PHASE IV BORROW AREA "D"

PROPOSED HAUL ROAD. CONTRACTOR RESPONSIBLE FOR MAINTAINING

EXISTING PUMP HOUSE

PROPOSED 20LF FLOATING TURBIDITY BARRIER

EXISTING 60LF 48" RCP (PHASE III)

EXISTING HAUL ROAD FROM PHASE I. CONTRACTOR RESPONSIBLE FOR MAINTAINING

NOTE:
1. TOP OF BANK LINES DELINEATE LIMITS OF CONSTRUCTION.

2. IF DEWATERING IS NEEDED, CONTRACTOR SHALL ULTIMATELY DISCHARGE ANY DEWATERING ACTIVITIES INTO THE PHASE I BORROW PIT AFTER ALL MEASURES HAVE BEEN TAKEN TO REMOVE ALL COLLOIDAL PARTICALS.

FLORIDA DEPARTMENT OF ENVIRONMENTAL PROTECTION
SEP 21 2011
SOUTHWEST DISTRICT TAMPA

POST, BUCKLEY, SCHUH & JERNIGAN, INC., D/B/A/ PBSJ

PRINCIPAL ADDRESS:
5300 W. CYPRESS SUITE 300
TAMPA, FL. 33607
FBPR CERT. OF AUTH. No. 24

PRODUCTION ADDRESS:
101 ARTHUR ANDERSEN
PARKWAY SUITE 260
SARASOTA, FLORIDA 34232
PHONE: (941) 378 - 0272

CLIENT:
SARASOTA COUNTY
ENVIRONMENTAL SERVICES
SOLID WASTE OPERATIONS
4000 KNIGHTS TRAIL ROAD
NOKOMIS, FLORIDA 34275

PROJECT:
CENTRAL COUNTY SOLID
WASTE DISPOSAL COMPLEX
BORROW FACILITY - PHASE IV

TASK:
SITE / DRAINAGE PLAN
BORROW AREA B

ORIGINAL: SEPTEMBER 08
REVISIONS:
1 _____ 2 _____ 3 _____ 4 _____ 5 _____
6 _____ 7 _____ 8 _____ 9 _____ 10 _____ 11 _____ 12 _____

NOT VALID FOR CONSTRUCTION UNLESS SIGNED IN THIS BLOCK

PROFESSIONAL ENGINEER:
BRYAN ZOLLER, PE
FL. LICENSE #: 63933

JOB NO.: 10000[illegible]628
DRAWN: BZ
DESIGNED: BZ
CHECKED: JE
QC: GB
SHEET 5

NOTE:
1. TOP OF BANK LINES DELINEATE LIMITS OF CONSTRUCTION.

2. IF DEWATERING IS NEEDED, CONTRACTOR SHALL ULTIMATELY DISCHARGE ANY DEWATERING ACTIVITIES INTO THE PHASE I BORROW PIT AFTER ALL MEASURES HAVE BEEN TAKEN TO REMOVE ALL COLLOIDAL PARTICALS.

LEGEND:

- EXISTING SPOT ELEVATION / PROPOSED SPOT ELEVATION
- EXISTING FENCE
- EXISTING/PROPOSED FLOW ARROW
- EXISTING CONTOUR
- EXISTING WATER
- EXISTING TREES / BRUSH
- EXISTING BORROW AREA
- PROPOSED ACTIVITY
- PROPOSED CROSS SECTION

PROPOSED 20LF FLOATING TURBIDITY BARRIER

PROPOSED PHASE V
BORROW AREA "C"

EXISTING PHASE I
BORROW AREA

EXISTING AGRICULTURAL IMPOUNDMENT AREA "D" (0.2BAC)
SEE CROSS SECTION SHEET 8

W/S 9.8

0' 100' 200'

OWNER/APPLICANT
OPERATOR / MAINTENANCE ENTITY

SPENCER ANDERSON, PE
PROGRAM MANAGER

FLORIDA DEPARTMENT OF ENVIRONMENTAL PROTECTION
SEP 21 2011
SOUTHWEST DISTRICT
TAMPA

POST, BUCKLEY, SCHUH & JERNIGAN, INC., D/B/A/ PBSJ

PRINCIPAL ADDRESS:
5300 W. CYPRESS SUITE 300
TAMPA, FL. 33607
FBPR CERT. OF AUTH. No. 24

PRODUCTION ADDRESS:
101 ARTHUR ANDERSEN
PARKWAY SUITE 260
SARASOTA, FLORIDA 34232
PHONE: (941) 378 - 0272

CLIENT:
SARASOTA COUNTY
ENVIRONMENTAL SERVICES
SOLID WASTE OPERATIONS
4000 KNIGHTS TRAIL ROAD
NOKOMIS, FLORIDA 34275

PROJECT:
CENTRAL COUNTY SOLID
WASTE DISPOSAL COMPLEX
BORROW FACILITY - PHASE V

TASK:
SITE / DRAINAGE PLAN
BORROW AREA C

ORIGINAL: SEPTEMBER 08
REVISIONS:
1 2 3 4 5 6 7 8 9 10 11 12

NOT VALID FOR CONSTRUCTION UNLESS SIGNED IN THIS BLOCK

PROFESSIONAL ENGINEER:
BRYAN ZOLLER, PE
FL. LICENSE #: 63933

JOB NO.: 100007426
DRAWN: BZ
DESIGNED: BZ
CHECKED: JE
QC: CS

SHEET 6

PROPOSED HAUL ROAD. CONTRACTOR RESPONSIBLE FOR MAINTAINING

EXISTING PUMP HOUSE

PROPOSED 20LF FLOATING TURBIDITY BARRIER

EXISTING 60LF 48" RCP (PHASE III)

EXISTING HAUL ROAD FROM PHASE I. CONTRACTOR RESPONSIBLE FOR MAINTAINING

NOTE:
1. TOP OF BANK LINES DELINEATE LIMITS OF CONSTRUCTION.

2. IF DEWATERING IS NEEDED, CONTRACTOR SHALL ULTIMATELY DISCHARGE ANY DEWATERING ACTIVITIES INTO THE PHASE I BORROW PIT AFTER ALL MEASURES HAVE BEEN TAKEN TO REMOVE ALL COLLOIDAL PARTICALS.

OWNER/APPLICANT
OPERATOR / MAINTENANCE ENTITY

SPENCER ANDERSON, PE
PROGRAM MANAGER

LEGEND:

- EXISTING SPOT ELEVATION / PROPOSED SPOT ELEVATION
- EXISTING FENCE
- EXISTING/PROPOSED FLOW ARROW
- EXISTING CONTOUR
- EXISTING WATER
- EXISTING TREES / BRUSH
- EXISTING BORROW AREA
- PROPOSED ACTIVITY
- PROPOSED CROSS SECTION

EXISTING PHASE I BORROW AREA

PROPOSED PHASE V BORROW AREA "D"

0' 100' 200'

FLORIDA DEPARTMENT OF ENVIRONMENTAL PROTECTION
SEP 21 2011
SOUTHWEST DISTRICT TAMPA

POST, BUCKLEY, SCHUH & JERNIGAN, INC., D/B/A/ PBSJ

PRINCIPAL ADDRESS:
5300 W. CYPRESS SUITE 300
TAMPA, FL. 33607
FBPR CERT. OF AUTH. No. 24

PRODUCTION ADDRESS:
101 ARTHUR ANDERSEN
PARKWAY SUITE 260
SARASOTA, FLORIDA 34232
PHONE: (941) 378 - 0272

CLIENT:
SARASOTA COUNTY
ENVIRONMENTAL SERVICES
SOLID WASTE OPERATIONS
4000 KNIGHTS TRAIL ROAD
NOKOMIS, FLORIDA 34275

PROJECT:
CENTRAL COUNTY SOLID
WASTE DISPOSAL COMPLEX
BORROW FACILITY - PHASE V

TASK:
SITE / DRAINAGE PLAN
BORROW AREA D

ORIGINAL: SEPTEMBER 08
REVISIONS:
1 2 3 4 5 6 7 8 9 10 11 12

NOT VALID FOR CONSTRUCTION UNLESS SIGNED IN THIS BLOCK

PROFESSIONAL ENGINEER:
BRYAN ZOLLER, PE
FL. LICENSE #: 63993

JOB NO.: 100007426
DRAWN: BZ
DESIGNED: BZ
CHECKED: JE
QC: CS

SHEET 7

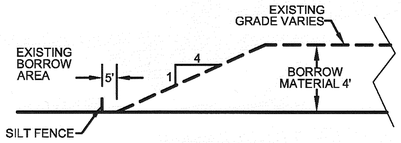

SECTION A-A
PROPOSED BORROW PIT
NTS

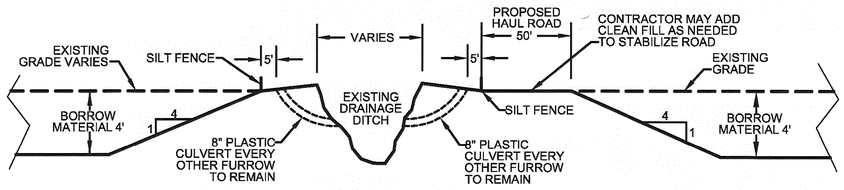

SECTION B-B
PROPOSED BORROW PIT
NTS

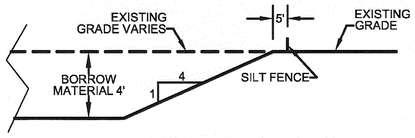

SECTION C-C
PROPOSED BORROW PIT
NTS

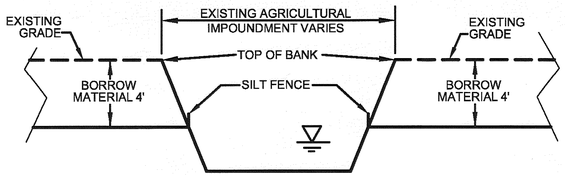

SECTION D-D
TYPICAL AGRICULTURAL
IMPOUNDMENT AREA CROSS SECTION
NTS

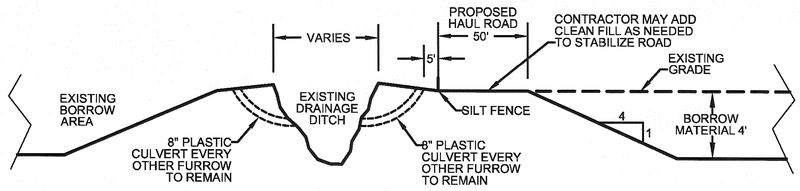

SECTION E-E
PROPOSED BORROW PIT
NTS

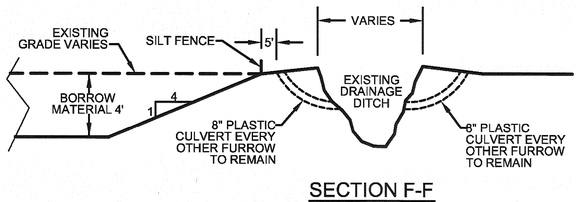

SECTION F-F
PROPOSED BORROW PIT
NTS

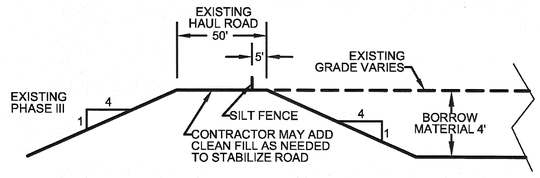

SECTION G-G
EXISTING HAUL ROAD
NTS

OWNER/APPLICANT
OPERATOR / MAINTENANCE ENTITY

FLORIDA DEPARTMENT OF ENVIRONMENTAL PROTECTION
SEP 21 2011
SOUTHWEST DISTRICT TAMPA

SPENCER ANDERSON, PE
PROGRAM MANAGER

POST, BUCKLEY, SCHUH & JERNIGAN, INC., D/B/A/
PBSJ
PRINCIPAL ADDRESS:
5300 W. CYPRESS SUITE 300
TAMPA, FL. 33607
FBPR CERT. OF AUTH. No. 24
PRODUCTION ADDRESS:
101 ARTHUR ANDERSEN
PARKWAY SUITE 260
SARASOTA, FLORIDA 34232
PHONE: (941) 378 - 0272

CLIENT:
SARASOTA COUNTY
ENVIRONMENTAL SERVICES
SOLID WASTE OPERATIONS
4000 KNIGHTS TRAIL ROAD
NOKOMIS, FLORIDA 34275

PROJECT:
CENTRAL COUNTY SOLID
WASTE DISPOSAL COMPLEX
BORROW FACILITY - PHASE V

TASK:
CROSS SECTIONS

ORIGINAL: SEPTEMBER 08
REVISIONS:
1 2 3 4 5 6 7 8 9 10 11 12

NOT VALID FOR CONSTRUCTION UNLESS SIGNED IN THIS BLOCK

PROFESSIONAL ENGINEER:
BRYAN ZOLLER, PE
FL. LICENSE #: 63933

JOB NO.: 100007426
DRAWN: BZ
DESIGNED: BZ
CHECKED: JE
QC: CS

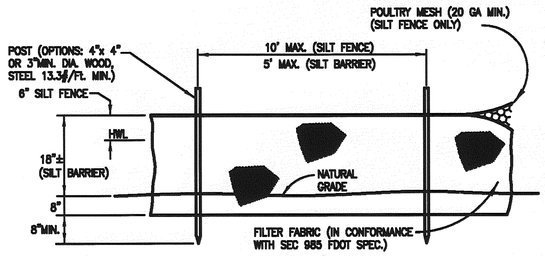

ELEVATION

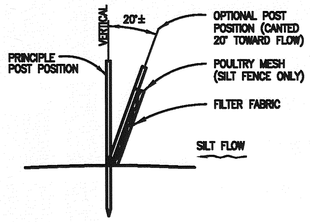

SECTION

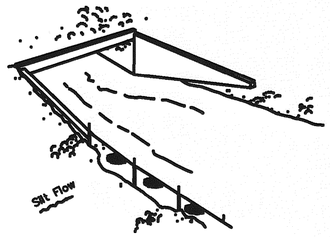

Type III Silt Fence

Note: Spacing for Type III Fence to be in accordance with Chart 1, Sheet 1 of 3 and ditch installations at drainage structures Sheet 2 of 3.
FDOT DESIGN STANDARDS, 2004, INDEX 102

Type III Silt Fence

TYPICAL SILT FENCE AND STAKED SILT BARRIER

N.T.S.

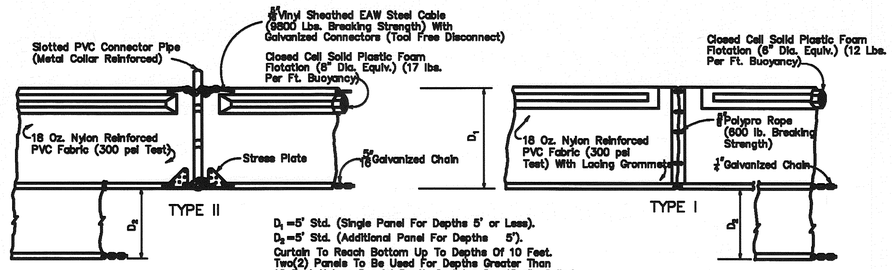

D_1 =5' Std. (Single Panel For Depths 5' or Less).
D_2 =5' Std. (Additional Panel For Depths 5').
Curtain To Reach Bottom Up To Depths Of 10 Feet.
Two(2) Panels To Be Used For Depths Greater Than
10 Feet Unless Special Depth Curtains Specifically Called
For In The Plans Or As Determined By The Engineer.

NOTICE: COMPONENTS OF TYPES I AND II MAY BE SIMILAR OR IDENTICAL TO PROPRIETARY DESIGNS. ANY INFRINGEMENT ON THE PROPRIETARY RIGHTS OF THE DESIGNER SHALL BE THE SOLE RESPONSIBILITY OF THE USER. SUBSTITUTIONS FOR TYPES I AND II SHALL BE AS APPROVED BY THE ENGINEER.

FLOATING TURBIDITY BARRIERS

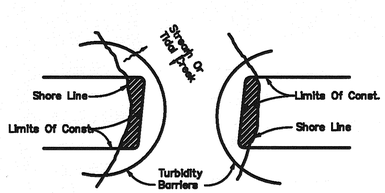

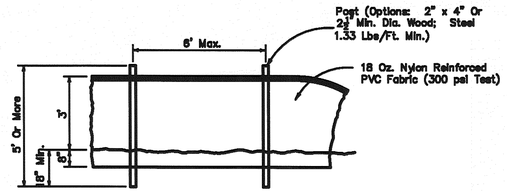

STAKED TURBIDITY BARRIER

NOTES:
1. Turbidity barriers are to be used in all permanent bodies of water regardless of water depth.
2. Number and spacing of anchors dependent on current velocities.
3. Deployment of barrier around pile locations may vary to accommodate construction operations.
4. Navigation may require segmenting barrier during construction operations.
5. For additional information see Section 104 of the FDOT Standard Specifications,2004 .
6. Floating turbidity barriers are to be paid for under the contract unit price for Floating Turbidity Barrier, LF.
7. Staked turbidity barriers are to be paid for under the contract unit price for Staked Turbidity Barrier, LF.

NOTE:
Turbidity barriers for flowing streams and tidal creeks may be either floating, or staked types or any combinations of types that will suit site conditions and meet erosion control and water quality requirements. The barrier type(s) will be at the Contractors option unless otherwise specified in the plans, however payment will be under the pay item(s) established in the plans for Floating Turbidity Barrier and/or Staked Turbidity Barrier. Posts in staked turbidity barriers to be installed in vertical position unless otherwise directed by the Engineer.

TURBIDITY BARRIER APPLICATIONS

OWNER/APPLICANT
OPERATOR / MAINTENANCE ENTITY

RECEIVED
DEPARTMENT OF ENVIRONMENTAL PROTECTION
SEP 21 2011
SOUTHWEST DISTRICT
TAMPA

SPENCER ANDERSON, PE
PROGRAM MANAGER

POST, BUCKLEY, SCHUH & JERNIGAN, INC., D/B/A/
PBSJ
PRINCIPAL ADDRESS:
5300 W. CYPRESS SUITE 300
TAMPA, FL. 33607
FBPR CERT. OF AUTH. No. 24
PRODUCTION ADDRESS:
101 ARTHUR ANDERSEN
PARKWAY SUITE 260
SARASOTA, FLORIDA 34232
PHONE: (941) 378 - 0272

CLIENT:
SARASOTA COUNTY
ENVIRONMENTAL SERVICES
SOLID WASTE OPERATIONS
4000 KNIGHTS TRAIL ROAD
NOKOMIS, FLORIDA 34275

PROJECT:
CENTRAL COUNTY SOLID
WASTE DISPOSAL COMPLEX
BORROW FACILITY - PHASE V

TASK:
EROSION & SEDIMENT CONTROL

ORIGINAL: SEPTEMBER 08
REVISIONS:
1 2 3 4 5 6 7 8 9 10 11 12

NOT VALID FOR CONSTRUCTION UNLESS SIGNED IN THIS BLOCK

PROFESSIONAL ENGINEER:
BRYAN ZOLLER, PE
FL. LICENSE #: 63933

JOB NO.: 100007426
DRAWN: BZ
DESIGNED: BZ
CHECKED: JE
QC: CS
SHEET 9