4009 C 00086
WACS 39859

STATE OF FLORIDA
DEPARTMENT OF ENVIRONMENTAL REGULATION

D.E.P.
MAY 14 1996
SOUTHWEST DISTRICT
TAMPA

CERTIFICATION OF CONSTRUCTION COMPLETION
OF A SOLID WASTE MANAGEMENT FACILITY

DER Construction Permit No.: SC FC09272928 County: Citrus

Name of Project: Leachate Storage Tank

Name of Owner: Citrus County

Name of Engineer: Steven N. Tsangaris, P.E. CH2M HILL

Type of Project: Construction of a Leachate Storage Tank

Cost: Estimated $ 774,185 Actual $ 774,185

Site Design: Quantity: N/A ton/day Site Acreage: 15.6 Acres

Population: N/A Dumping Fees: $ N/A /Ton

Deviations from Plans and Application Approved by DER:
No significant deviations from construction plans. There were no change orders issued on this contract.

Water Monitoring Data Submitted to DER, Date: N/A

Address and Telephone No. of Site: 230 W. Gulf to Lake Highway, Lecanto, FL 34461 (352) 746-5000

Name(s) of Site Supervisor: Susan J. Metcalfe, P.G.

Date Site Inspection is requested: May 14, 1996

This is to certify that, with the exception of deviation noted above, the construction of the project has been completed in accordance with the plans authorized by Construction Permit No.: FC09272928 Dated: 5/13/96

Date: 5/13/96

Steven N. Tsangaris
Signature of Professional Engineer

N/A = Not Applicable

DER FORM 17-701.900(2) Effective January 6, 1993

REGfiles: 1/93

IMAGE QUALITY

AS YOU VIEW THE FOLLOWING DOCUMENT, PLEASE NOTE THAT PORTIONS OF THE ORIGINAL WERE OF POOR QUALITY

SET NO.

CONSTRUCTION PLANS

FOR

CITRUS COUNTY CENTRAL LANDFILL

FOR

LEACHATE STORAGE TANK

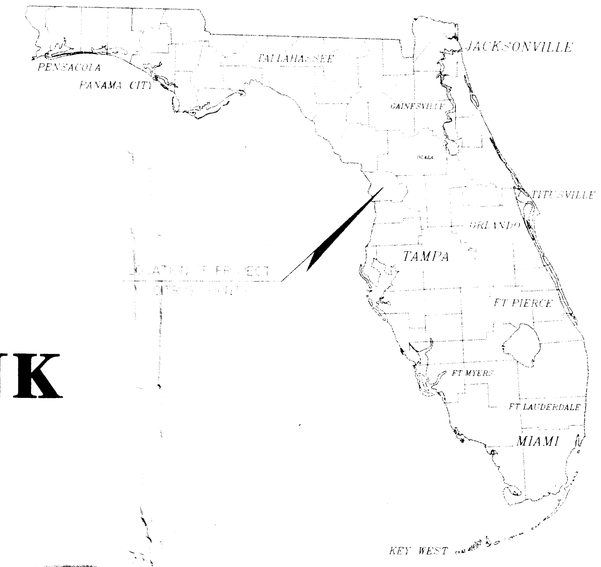

FLORIDA

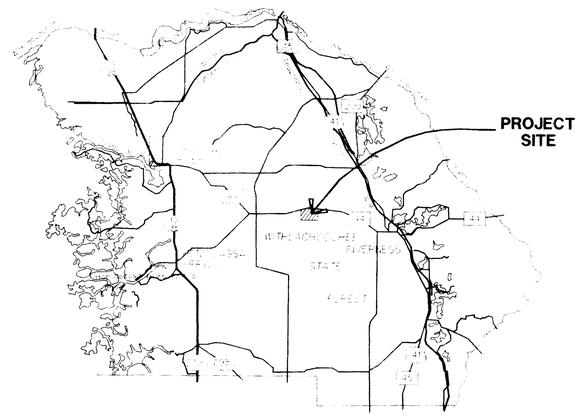

CITRUS COUNTY

LOCATION MAP

BOARD OF COUNTY COMMISSIONERS

FRANK SCHIRALDI	DISTRICT 1
GARY BARTELL	DISTRICT 2
VICKI PHILLIPS	DISTRICT 3
JIM FOWLER	DISTRICT 4
BRAD THORPE	DISTRICT 5

COUNTY ADMINISTRATOR

ANTHONY L. SHOEMAKER

PUBLIC WORKS DEPARTMENT DIRECTOR

GARY W. KUHL, P.E.

SOLID WASTE MANAGEMENT DIVISION DIRECTOR

SUSAN J. METCALFE, P.G.

Berryman & Henigar

BSI Consultants, Inc. ▪ Henigar & Ray, Inc.

APRIL 7, 1995

D.E.P.
MAY 20 1996
SOUTHWEST DISTRICT
TAMPA

PROJECT RECORD

CH2M HILL
P. O. BOX 21647
TAMPA, FLORIDA 33622-1647

ENGINEERS CERTIFICATIONS

CIVIL/ENVIRONMENTAL

GEORGE J. McDONALD, P.E.
REGISTERED ENGINEER NO. 41740
STATE OF FLORIDA
DATE

STRUCTURAL

DAVID BRITTAIN, P.E.
REGISTERED ENGINEER NO. 41740
STATE OF FLORIDA
DATE

STRUCTURAL GENERAL NOTES

DESIGN CRITERIA

ACI 350R-89, "CONCRETE SANITARY ENGINEERING STRUCTURES".

ACI 318-89, (REVISED 1992) "BUILDING CODE REQUIREMENTS FOR REINFORCED CONCRETE"

STANDARD BUILDING CODE, 1991 EDITION

AISC MANUAL OF STEEL CONSTRUCTION, NINTH EDITION

DESIGN LIVE LOADS:

WALKWAYS, CATWALKS:	100 PSF
PROCESS SLABS:	200 PSF
SLABS ON GRADE:	150 PSF

WIND LOADS:

DESIGN WIND SPEED: 100 MPH

DESIGN PRESSURES: PER SBC SECTION 1205 REQUIREMENTS

ALL CONCRETE SHALL HAVE A MINIMUM COMPRESSIVE STRENGTH AT 28 DAYS AS FOLLOWS:

- SLABS, FOOTINGS, COLUMNS, WALLS:	3500 psi
- SIDEWALKS:	2500 psi
- PRESTRESSED, PRECAST ELEMENTS:	5000 psi
- MASONRY FILLED CELL GROUT:	2500 psi

STRUCTURAL STEEL

- ALL WELDS TO USE E70XX ELECTRODES
- ALL STRUCTURAL STEEL UNLESS NOTED OTHERWISE SHALL BE ASTM A-36, BOLTS SHALL BE ASTM A307,A325,A490. HOT-DIP GALVANIZE ALL STEEL & HARDWARE & FABRICATE TO THE MAXIMUM POSSIBLE EXTENT BEFORE GALVANIZING.
- ALL FIELD WELDS, DRILLED HOLES & AREAS OF DAMAGED GALVANIZED COATING SHALL BE THOROUGHLY CLEANED OF DIRT, GREASE & OIL OR LOOSE MATERIAL, WIRE BRUSHED & PAINTED WITH TWO COATS OF ZINC BASED COLD GALVANIZING COMPOUND. GALVANIZED MEMBERS SHALL BE PROTECTED TO THE MAXIMUM PRACTICAL EXTENT FROM WELD SPATTER & ALL DAMAGE DUE TO SPATTER SHALL BE CLEANED & RECOATED

STRUCTURAL ALUMINUM

- ALL STRUCTURAL ALUMINUM SECTIONS, INCLUSIVE OF ANGLES, CHANNELS, PLATES AND MISCELLANEOUS SHAPES, SHALL BE MAGNESIUM SILICIDE ALUMINUM ALLOY TYPE 6061-T6, OR 6063-T6OR SUPERIOR GRADE

FOUNDATIONS

- FOUNDATION DESIGN BASED ON ALLOWABLE MINIMUM SOIL BEARING PRESSURE OF 2000 PSF. ALL PROPOSED FOOTING LOCATIONS SHALL BE STRIPPED & CLEARED OF ALL VEGETATION AND TOPSOIL OR OTHER ORGANIC MATTER. PERFORM ROOT RAKING TO A DEPTH OF 18". THE BOTTOM OF ALL FOOTINGS SHALL BE AT LEAST 12" BELOW ADJACENT FINISHED GRADE. REFER TO GEOTECHNICAL REPORT FOR PREPARATION OF SUBGRADE UNDER SLABS & FOOTINGS.

HANDRAIL NOTES

- ALL HANDRAIL RAILING & POST TO BE 1 1/2" DIAMETER SCHEDULE 40 ALUMINUM PIPE & SHALL MEET ASTM B-429. RAILING & POST SHALL BE WELDED AT ALL CONNECTIONS.
- ALL MOUNTING BASE FLANGES SHALL BE ALUMINUM AND SECURELY FASTENED TO THE PIPE.

REINFORCED CONCRETE MASONRY UNIT CONSTRUCTION DESIGN CRITERIA:

- DESIGN COMPRESSIVE STRENGTH OF MASONRY AT 28 DAYS — fm = 1500 psi
- ALLOW STEEL STRESS — fs = 24000 psi
- ALL METHODS OF CONSTRUCTION & MATERIALS SHALL BE IN ACCORDANCE WITH DRAWINGS, SPECIFICATIONS, AND THE FOLLOWING:
- THE NATIONAL CONCRETE MASONRY ASSOCIATION "SPECIFICATION FOR DESIGN AND CONSTRUCTION OF LOAD BEARING STRUCTURES"
- ACI 530-92 "BUILDING CODE REQUIREMENTS FOR CONCRETE MASONRY STRUCTURES."

MATERIALS

- MORTAR SHALL CONFORM TO ASTM C270, TYPE M MINIMUM COMPRESSIVE STRENGTH AT 28 DAYS-2500PSI. UTILIZE TYPE I CEMENT & TYPE S HYDRATED LIME CONFORMING TO ASTM C207.
- GROUT SHALL CONFORM TO ASTM C476, COARSE GROUT. MINIMUM COMPRESSIVE STRENGTH AT 28 DAYS-2500PSI.
- STEEL REINFORCEMENT SHALL BE HOT-DIPPED GALV."DUR-O-WALL" OR EQUAL JOINT REINFORCEMENT AT EVERY SECOND COURSE, 16" O.C. "DUR-O-WALL" SIDE WIRES SHALL BE LAPPED 6"
- BLOCK SHALL CONFORM TO ASTM C90-GRADE N, TYPE I, TWO CELL, 8"x8"x16", MINIMUM COMPRESSIVE STRENGTH 1000 PSI.

MASONRY CONSTRUCTION

- ALL FILLED-CELL MASONRY SHALL BE BUILT TO PRESERVE THE UNOBSTRUCTED VERTICAL CONTINUITY OF THE CELLS TO BE FILLED WITH GROUT.
- ALL MORTAR FINS OR OTHER OBSTRUCTIONS OR DEBRIS SHALL BE REMOVED FROM THE INSIDES OF THE WALLS OF THE CELLS TO BE FILLED WITH GROUT. ALL CELLS TO BE FILLED SHALL BE FILLED SOLIDLY WITH GROUT.
- GROUT SHALL BE POURED OR PUMPED IN LIFTS OF 8 FT. MAXIMUM HEIGHT, & SHALL BE CONSOLIDATED AT TIME OF POURING BY RODDING OR VIBRATING, FOLLOWED BY RECONSOLIDATION LATER BEFORE PLASTICITY IS LOST. WHEN TOTAL GROUT POUR EXCEEDS 8 FT. HIGH, IT SHALL BE DONE BY 4 FT. LIFTS.
- PROVIDE CLEAN OUT & INSPECTION BLOCK OUTS IN CELLS CONTAINING REINFORCING.
- ALL FILLED CELLS & COLUMNS SHALL BE POURED AT LEAST TWO HOURS PRIOR TO POURING LINTEL BLOCK OR TIE BEAMS.

GENERAL CONDITIONS

- THE CONTRACTOR SHALL NOTIFY THE ENGINEER IN WRITING IF ANY DISCREPANCIES APPEAR IN PLANS OR IF FIELD CONDITIONS MAY AFFECT CONSTRUCTION OF THE FACILITY. THE CONTRACTOR SHALL NOT COMMENCE WITH WORK UNTIL ENGINEER HAS RESPONDED TO DISCREPANCIES.
- IT IS THE CONTRACTORS RESPONSIBILITY TO FOLLOW ALL APPLICABLE SAFETY CODES AND REGULATIONS DURING ALL PHASES OF CONSTRUCTION.
- THE CONTRACTOR SHALL TAKE ANY AND ALL NECESSARY PRECAUTIONS TO PROTECT EXISTING STRUCTURE WALLS, SLABS & FOOTINGS FROM POSSIBLE DAMAGE WHEN WORKING IN VICINITY OF EXISTING STRUCTURES PERFORMING DEMOLITION, FOUNDATION EXCAVATION OR OTHER RELATED WORK.
- ALL STRUCTURAL DRAWINGS SHALL BE USED IN CONJUNCTION WITH ELECTRICAL, MECHANICAL,CIVIL AND SHOP DRAWINGS & SPECIFICATIONS.
- ANCHOR BOLTS SHALL BE FURNISHED AND SET BY THE CONTRACTOR IN ACCORDANCE WITH BUILDING MANUFACTURER'S INSTRUCTIONS. LOCATION OF EQUIPMENT PADS SHALL BE PER EQUIPMENT MANUFACTURER'S REQUIREMENTS.
- FOR ALL ITEMS EMBEDDED IN OR PASSED THROUGH CONCRETE, THE CONTRACTOR SHALL INITIALLY REFER TO DRAWINGS, MECHANICAL, HEATING & VENTILATION DRAWINGS FOR TYPE SIZE, LOCATION, & SPECIAL INSTALLATION REQUIREMENTS FOR THESE ITEMS.

REINFORCING STEEL

- REINFORCING STEEL SHALL BE INTERMEDIATE DEFORMED BARS CONFORMING TO ASTM A-615, GRADE 60 REQUIREMENTS. SPLICES IN THE REINFORCING STEEL SHALL BE LAPPED 40 BAR DIAMETERS, MINIMUM, UNLESS OTHERWISE NOTED. FIELD WELDING OF REINFORCING STEEL WILL NOT BE ALLOWED. FABRICATING DETAILS SHALL CONFORM TO ACI 315 REQUIREMENTS. WELDED WIRE FABRIC SHALL CONFORM WITH ASTM A185. ALL REINFORCING SHALL HAVE A MINIMUM CONCRETE COVER AS FOLLOWS, UNLESS OTHERWISE NOTED:
  - CONCRETE SURFACES POURED AGAINST EARTH — 3"
  - CONCRETE SURFACES CAST AGAINST WORKING SLAB — 2"
  - FORMED CONCRETE SURFACES EXPOSED TO GROUND, SEWAGE, WATER OR WEATHER — 2"

CONCRETE

- ALL MATERIAL & METHODS OF CONSTRUCTION SHALL BE IN ACCORDANCE WITH ACI 318 REQUIREMENTS.
- AN AIR-ENTRAINING ADMIXTURE, CONFORMING TO ASTM C 260 SHALL BE USED IN ALL CONCRETE.
- WATER REDUCING AGENTS, CONFORMING TO ASTM C494 SHALL BE USED IN ALL CONCRETE.
- ALL CONCRETE SURFACES EXPOSED TO WEATHER, SHALL BE TREATED WITH AN APPROPRIATE CURING COMPOUND AFTER FORMS ARE REMOVED OR AS SOON AS CEMENT FINISHING IS COMPLETED.
- CONSTRUCTION JOINTS PERMITTED ONLY WHERE SHOWN OR AS APPROVED IN WRITING BY THE STRUCTURAL ENGINEER.
- DOWELS FROM FOUNDATIONS OR SLABS TO WALLS SHALL MATCH WITH WALL REINFORCING, UNLESS NOTED OTHERWISE. DOWELS SHALL BE PLACED BEFORE CONCRETE IS POURED. THEY SHALL NOT BE PUSHED INTO CONCRETE.

PRECAST PRESTRESSED CONSTRUCTION

- ALL PRECAST PRESTRESSED MEMBERS SHALL BE DESIGNED BY A PROFESSIONAL ENGINEER LICENSED IN THE STATE OF FLORIDA EXPERIENCED IN SUCH DESIGN FOR LOADS SHOWN ON DRAWINGS AND IN CONFORMANCE WITH THE REQUIREMENTS OF APPLICABLE SPECIFICATIONS. EQUIPMENT LOADS OR OTHER LOADING MUST BE CONSIDERED AS REQUIRED

FLOTATION CONSIDERATION

- GENERAL CONTRACTOR SHALL PROTECT ALL STRUCTURES FROM POTENTIAL FLOTATION DURING CONSTRUCTION. CONTRACTOR SHALL TAKE NECESSARY MEASURES TO CONTROL GROUND WATER LEVELS, UNTIL STRUCTURES ARE PLACED IN OPERATION. STRUCTURES WERE DESIGNED TO BE NON-BOYANT AFTER THE FOUNDATION EXCAVATIONS ARE TOTALLY BACKFILLED. THE STRUCTURE MAY BECOME BOYANT DURING CONSTRUCTION IF PROPER MEASURES ARE NOT TAKEN

PLAN NOTES

1. AERIAL PHOTOGRAMMETRY BY OTHERS
2. ALL ELEVATIONS REFERENCE NGVD
3. ATTENTION IS DRAWN TO THE FACT THAT THESE PLANS MAY HAVE BEEN ALTERED IN SIZE BY REPRODUCTION. THIS MUST BE CONSIDERED WHEN OBTAINING SCALED DATA.
4. UTILITIES:

FLORIDA POWER CORPORATION:	(904) 795-3145
TELEPHONE: UNITED TELEPHONE CO.: OF FLA.:	(904) 726-7830
WATER AND SEWER, CITRUS COUNTY UTILITIES:	(904) 746-2694

INDEX OF SHEETS

SHEET No.	GENERAL
G-1	COVER SHEET AND LOCATION MAP
G-2	GENERAL NOTES AND INDEX OF SHEETS
G-3	STANDARD SYMBOLS & ABBREVIATIONS
	CIVIL
C-1	SITE AND GEOMETRY PLAN
C-2	FORCE MAIN PLAN AND PROFILE STA. 0+00 to 1200+00
C-3	FORCE MAIN PLAN AND PROFILE STA. 1200+00 to 1300+60
C-4	LEACHATE TANK GRADING PLAN
C-5	LEACHATE STORAGE TANK YARD PIPING PLAN
C-6	MISCELLANEOUS DETAILS
	MECHANICAL
M-1	LEACHATE STORAGE TANK MECHANICAL PLAN & DETAILS
M-2	SECONDARY CONTAINMENT MECHANICAL PLAN
M-3	LEACHATE PUMPING STATION MECHANICAL PLAN
M-4	LEACHATE PUMPING STATION
M-5	MISCELLANEOUS MECHANICAL DETAILS, STAIRS, HANDRAILS & GRATES
	STRUCTURAL
S-1	STRUCTURAL PLAN AND DETAILS
S-2	STRUCTURAL SECTIONS AND DETAILS
S-3	SECONDARY CONTAINMENT STRUCTURAL PLAN
S-4	LEACHATE PUMPING STATION STRUCTURAL PLAN
	ELECTRICAL
E-1	SITE ELECTRICAL PLAN
E-2	ELECTRICAL DETAILS

GENERAL NOTES

1. THE CONTRACTOR SHALL MAINTAIN ON-SITE ALL NECESSARY PERMITS BEFORE AND AFTER COMMENCEMENT OF CONSTRUCTION.
2. ALL PIPING AND/OR APPURTENANCES CONNECTING TO ADJACENT CONSTRUCTION SHALL BE PLUGGED IF ADJACENT WORK HAS NOT BEEN COMPLETED.
3. CONTRACTOR SHALL PROVIDE TEMPORARY THRUST RESTRAINT, BRACING, TEST PLUGS AND/OR OTHER DEVICES NECESSARY TO SUCCESSFULLY COMPLETE PRESSURE TESTING OF ALL PRESSURE PIPING SYSTEMS.
4. ALL PIPING SHALL BE PRESSURE TESTED IN ACCORDANCE WITH THE PROJECT SPECIFICATIONS. ALL PIPING SHALL BE INSTALLED WITH PROPER RESTRAINING DEVICES OR CONCRETE THRUST BLOCKS AT ALL DIRECTION CHANGES, UNLESS NOTED OTHERWISE.
5. EXISTING TOPOGRAPHY HAS BEEN PROVIDED BY OTHERS.
6. ALL FASTENERS SHALL BE CONSTRUCTED OF NON-CORROSIVE MATERIAL.
7. THE LOCATION OF EXISTING UTILITIES SHOWN ON THESE DRAWINGS HAS BEEN DERIVED FROM EXISTING UTILITY RECORDS. IT IS THE CONTRACTOR'S RESPONSIBILITY TO FIELD LOCATE AND DETERMINE THE EXACT LOCATION, DEPTH AND CHARACTER OF ALL UTILITIES PRIOR TO CONSTRUCTION.
8. PRIOR TO EXCAVATION, THE CONTRACTOR SHALL LOCATE EXISTING UTILITY LINES AND TAKE NECESSARY ACTION TO PROTECT THESE LINES DURING CONSTRUCTION. THE CONTRACTOR IS RESPONSIBLE FOR REPLACING UTILITY LINES DAMAGED AS A RESULT OF CONSTRUCTION ACTIVITIES AT NO ADDITIONAL COST TO THE OWNER.
9. IT IS THE CONTRACTOR'S RESPONSIBILITY TO COORDINATE HIS WORK WITH THE WORK SCHEDULE OF OTHER CONTRACTORS AND FACILITY OPERATORS.
10. ALL FLANGED COUPLING ADAPTORS TO HAVE A MINIMUM OF 2-A36 3/4 INCH DIA. GALVANIZED RESTRAINING RODS EQUALLY SPACED.
11. ALL PIPELINE INSTALLATION SHALL CONFORM TO CITRUS COUNTY STANDARDS AND THE CONTRACT DOCUMENTS TECHNICAL SPECIFICATIONS.
12. PIPE MEASUREMENTS ARE TO CENTER OF FITTINGS.
13. ALL LEACHATE TRANSMISSION PIPING SHALL BE HDPE EXCEPT WHERE OTHERWISE NOTED. VALVES/FITTINGS SHALL BE AWWA CLASS 250 WITH A MINIMUM OF 36" COVER U.N.O.
14. UNDERGROUND PIPING BETWEEN STRUCTURES SHALL BE HDPE UNLESS OTHERWISE NOTED. ABOVE GROUND PIPING SHALL BE D.I.P.
15. THE EXISTING TREATMENT PLANT MUST REMAIN IN OPERATION AT ALL TIMES. IT IS THE CONTRACTORS RESPONSIBILITY TO PROVIDE ANY TEMPORARY FACILITIES REQUIRED TO MANTAIN PLANT OPERATION. NOTIFY SOLID WASTE MANAGER AND ENGINEER OF ANY CONSTRUCTION THAT MAY CAUSE OPERATION PROBLEMS 24 HOURS IN ADVANCE OF PERFORMING WORK.
16. INSTALL SOD 5 FEET FROM ALL DISTURBED AREAS: STRUCTURES, SIDEWALKS, POND IMPROVEMENT AREAS, AND ROADS. ALL OTHER DISTURBED AREAS TO BE SEEDED AND MULCHED, OR AS DIRECTED BY THE ENGINEER. SOD ALL GRADED SLOPES 6:1 AND STEEPER.
17. ATTENTION IS DIRECTED TO THE FACT THAT THESE PLANS MAY HAVE BEEN CHANGED IN SIZE DURING REPRODUCTION. THIS MUST BE CONSIDERED WHEN OBTAINING SCALED DATA.
18. ALL EQUIPMENT SALVAGED SHALL REMAIN THE PROPERTY OF CITRUS COUNTY.
19. **THE CONTRACTOR IS ADVISED THAT HE IS WORKING IN AN AREA WHERE EXPLOSIVE LANDFILL GAS CAN MIGRATE THROUGH SOILS, ACCUMULATE IN STRUCTURES, AND POSE OTHER DANGERS. NO SMOKING IS PERMITTED ON THE JOB SITE. THE CONTRACTOR IS RESPONSIBLE FOR BEING AWARE OF THE DANGERS OF WORKING IN THE PRESENCE OF LANDFILL GAS HAZARDS AND IS RESPONSIBLE FOR EDUCATING HIS WORK FORCE OF PROPER SAFE CONSTRUCTION PROCEDURES.**
20. THE CONTRACTOR SHALL TAKE ALL NECESSARY PRECAUTIONS TO PROTECT EXISTING GROUNDWATER MONITORING WELLS. IN THE EVENT THAT A GROUNDWATER MONITORING WELL IS DAMAGED DUE TO CONSTRUCTION ACTIVITIES, THE CONTRACTOR SHALL REPAIR OR REPLACE THE DAMAGED WELLS AT NO ADDITIONAL COST TO THE OWNER.

CH2M HILL
P. O. BOX 21647
TAMPA, FLORIDA 33622-1647

PROJECT RECORD

DESIGNED J.L.S.
DRAWN J.L.S.
CHECKED G.J.M.
DATE APRIL 7, 1995

Berryman & Henigar
BSI Consultants, Inc. ▪ Henigar & Ray, Inc.
640 EAST HIGHWAY 44 • CRYSTAL RIVER, FLORIDA 34429-4399 • (904) 795-6551

NO	DATE	REVISION	APP'D BY
	9/6	REVISED TO INCL. S-4	
	3/1/95	GENERAL REVISION	A.D.M.

CITRUS COUNTY CENTRAL LANDFILL
LEACHATE STORAGE TANK

GENERAL NOTES and
INDEX OF SHEETS

GEORGE J. McDONALD, P.E.
REGISTERED ENGINEER NO. 44740
STATE OF FLORIDA
DATE

JOB NO. 45085
FILE NO. SA-345
SEC. 1
TWP 19S RGE 18E
SHT G-2

ABBREVIATIONS

PIPE, JOINTS

	SYMBOLS
BLACK IRON PIPE	B.I.P.
BLACK STEEL PIPE	B.S.P.
CAST IRON	C.I.
CAST IRON PIPE	C.I.P.
CAST IRON SOIL PIPE	C.I.S.P.
CONCRETE PRESSURE PIPE	C.P.P.
COPPER PIPE	C.O.P.
CORRUGATED METAL PIPE	C.M.P.
DUCTILE IRON PIPE	D.I.P.
DUCTILE IRON	D.I.
EXPANSION	EXP.
FLANGE END	F.E.
GALVANIZED STEEL	G.S.
JOINT	JT.
MECHANICAL JOINT	M.J.
POLYETHYLENE PIPE	PLOY.P.
POLYVINYLCHLORIDE	P.V.C.
REINFORCED CONCRETE PIPE	R.C.P.
PUSH-ON JOINT	P.J.
STEEL PIPE	STL.P.
TIED JOINT	T.J.
VITRIFIED CLAY PIPE	V.C.P.
METAL REINFORCED PLASTIC PIPE	M.R.P.P.
RESTRAINED JOINT	R.J.
WALL SLEEVE	W.S.
WALL PIPE (WITH WATER STOP)	W.P.

VALVES, FITTINGS, ETC.

AIR CUSHION CHECK VALVE	A.C.C.V.
AIR RELEASE VALVE	A.R.V.
BALL CHECK VALVE	BA.C.V.
BALL VALVE	BA.V.
BLIND FLANGE	B.F.
BURIED GEAR OPERATOR	B.G.O.
BUTTERFLY VALVE	B.V.
CHECK VALVE	C.V.
ELECTRIC VALVE ACTUATOR	E.V.A.
ELEVATED GEAR OPERATOR	E.G.O.
FIRE HYDRANT	F.H.
FITTING	FTG.
FLANGED ADAPTOR	F.A.
FLEXIBLE COUPLING	F.C.
GATE VALVE	G.V.
HARNESSED FLANGED COUPLING ADAPTER	H.F.C.A.
HYDRAULIC VALVE ACTUATOR	H.V.A.
KNIFE GATE VALVE	K.G.V.
PLASTIC BALL VALVE	P.BA.V.
PLUG VALVE	P.V.
REDUCER	RED.
SILENT CHECK VALVE	S.C.V.

STRUCTURAL PLANS AND DETAILS

ALUMINUM	ALUM
BUILDING	BLDG
BOTTOM	BOT
CONTROL JOINT	CJ
CONCRETE MASONRY UNIT	CMU
CONCRETE	CONC
CONSTRUCTION JOINT	CONST JT
CONTINUOUS	CONT
DIAMETER	DIA
DRAWING	DWG
EACH FACE	EF
EXPANSION JOINT	EJ
ELEVATION	EL
EACH WAY	EW
FAR FACE	FF
FOOTING	FTG
HORIZONTAL	HORIZ
HIGH POINT	H.PT.
INSIDE DIAMETER	ID
LOW POINT	LP
MATERIAL	MAT'L
MAXIMUM	MAX
MINIMUM	MIN
MISCELLANEOUS	MISC
MANUFACTURER	MFR
NEAR FACE	NF
NOT TO SCALE	NTS
ON CENTER	OC
POUNDS PER LINEAR FOOT	PLF
PROJECTION	PROJ
POUNDS PER SQUARE FOOT	PSF
POUNDS PER SQUARE INCH	PSI
SIMILAR	SIM
SPECIFICATIONS	SPECS
STAINLESS STEEL	SS
STANDARD	STD
REINFORCEMENT	REINF
TOP AND BOTTOM	T&B
TOP OF FOOTING	TOF
TOP OF WALL	TOW
TYPICAL	TYP
UNLESS NOTED	UN
VERTICAL	VERT
WELDED WIRE FABRIC	WWF

GENERAL

	SYMBOLS
ADJUSTABLE	ADJ.
ANGLE	∠
APPROXIMATE	APPROX.
BENCH MARK	B.M.
BETWEEN	BTWN.
BOTTOM OF SLAB	B.O.S.
BUILDING	BLDG.
CAPACITY	CAP.
CENTER LINE	℄
CENTER TO CENTER	C.C.
CLEANOUT	C.O.
CONCRETE	CONC.
CONDITION	COND.
CONTINUATION	CONT.
CONNECTION	CONN.
CUBIC FOOT	CU. FT.
CUBIC INCH	CU. IN.
CUBIC YARD	CU. YD.
DEGREE	DEG.
DIAMETER	DIA.
DIAGONAL	DIAG.
DIMENSION	DIM.
DISCHARGE	DISC.
DRAWING	DWG.
EACH	EA.
EACH WAY	E.W.
EACH FACE	E.F.
EFFLUENT	EFF.
ELEVATION	EL., ELEV.
EQUIPMENT	EQUIP.
EXISTING	EXIST.
FINISH	FIN.
FINISH FLOOR	F.F.
FLEXIBLE	FLEX.
FLOOR DRAIN	F.D.
GAUGE	GA.
HIGH	H.
HIGH POINT	H.PT.
HIGH WATER LEVEL	H.W.L.
HORIZONTAL	HORIZ.
HORSEPOWER	H.P.
INFLUENT	INF.
INSIDE DIAMETER	I.D.
INTERMEDIATE	INT.
LINEAR FOOT	L.F.
LONG	L.G., L.
LOW WATER LEVEL	L.W.L.
LOW POINT	L.PT.
MANHOLE	M.H.
MANUFACTURER	MFR.
MATERIAL	MT'L.
MAXIMUM	MAX.
MECHANICAL	MECH.
MINIMUM	MIN.
MOUNTED	MTD.
NOMINAL	NOM.
NOT IN CONTRACT	N.I.C.
NOT TO SCALE	N.T.S.
NUMBER	NO., #
ON CENTERS	O.C.
OPERATOR	OPER.
OPTION	OPT.
OPPOSITE	OPP.
OPENING	OPNG.
OR EQUAL	O/E.
OUTSIDE DIAMETER	O.D.
PLATE	PL.
POINT	PT.
POUND	LB.
PRESSURE	PRES.
PROPOSED	PROP.
RADIUS	RAD., R.
REINFORCED FIBER PLASTIC	R.F.P.
REQUIRED	REQD.
RETURN ACTIVATED SLUDGE	R.A.S.
RETURN EFFLUENT WATER	R.E.W.
RIGHT OF WAY	R/W, R.O.W.
ROOM	RM.
REVOLUTIONS PER MINUTE	R.P.M.
SECTION	SEC.
SHEET	SH., SHT.
SIDEWALK	SDWK.
SIMILAR	SIM.
SPECIFICATIONS	SPECS.
SQUARE	SQ.
SQUARE FOOT	SQ. FT.
SQUARE INCH	SQ. IN.
SQUARE YARD	SQ. YD.
STAINLESS STEEL	SS
STANDARD	STD.
STANDARD DIMENSION RATIO	S.D.R.
STATION	STA.
STEEL	STL.
SYMMETRICAL	SYMM.
TEMPORARY	TEMP.
THICK	THK.
THREADED	THD.
TOP OF CONCRETE	T.O.C.
TOP OF SLAB	T.O.S.
TYPICAL	TYP.
UNLESS NOTED OTHERWISE	U.N.O.
VERTICAL	VERT.
VENT	V.T.
VENT THROUGH ROOF	V.T.R.
WASTE ACTIVATED SLUDGE	W.A.S.
WATER LEVEL	W.L.
WEATHERPROOF	WPF.
WIDE	W.

SYMBOLS, STRUCTURES & FEATURES

EXISTING	DESCRIPTION	PROPOSED
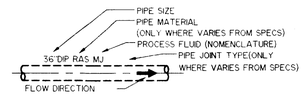	TYPICAL PIPE IDENTIFICATION	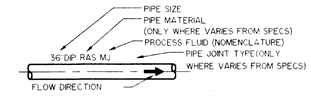
	SANITARY SEWER AND MANHOLE	
	SANITARY SEWER FORCE MAIN	
	WATER MAIN	
	FUEL LINE	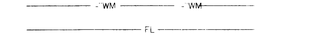
	GAS LINE	
	ELECTRIC CABLE/DUCT BANK	
	TELEVISION CABLE	
	SIGNAL LINE	
	FIRE HYDRANT ASSEMBLY (INCLUDES VALVE)	
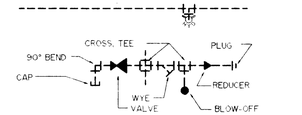	GENERAL PIPING, VALVES, AND FITTINGS	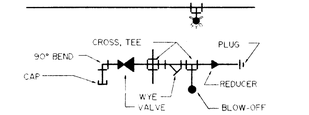
	RETURN ACTIVATED SLUDGE	
	WASTE ACTIVATED SLUDGE	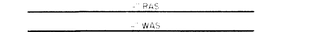
	EFFLUENT WATER	
	AIR PIPING	
	CHLORINE SOLUTION LINE	
	AIR RELEASE VALVE	
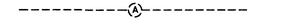	HOSE BIBB / CONNECTION, SIZE	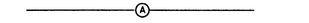
	VALVE VAULT	
	WATER METER	
	ELECTRIC MANHOLE/VAULT	
	TELEPHONE CABLE, MANHOLE/VAULT & BOX	
	BENCHMARK	
	TEST BORING	
	MONITOR WELL	
	RIGHT OF WAY (R/W)	
	PROPERTY LINE (PL)	
	IRON ROD & CAP	
	PK NAIL & CAP	
	#5 IRON ROD & CAP	
	4"X4" CM	
	FENCE, SIZE & TYPE	
	BUILDING/STRUCTURE	
	PAVEMENT, SIZE & TYPE	
	CATCH BASIN	
	CULVERT	
	SIGNS	
	POLE, POWER POLE & COMBINATION POLE	
	TREE, SIZE & TYPE	
	CONTOURS	
	SPOT ELEVATIONS	
	CONTOURS	
	STORM WATER FLOW	
	STREAM (SMALL)/DITCH, SWALE	

VALVES, PIPES & FITTINGS

NEW	EXIST.	DESCRIPTION
		UNCLASSIFIED. TYPE AS SHOWN ON THE DRAWINGS ADJACENT TO SYMBOL
		FLOW METER
		TELESCOPING VALVE
		UNION (UN)
		QUICK CONNECT COUPLING
		PRESSURE CONTROL VALVE
		VALVE WITH HOSE END
		VACUUM VALVE
		GATE VALVE
		KNIFE GATE VALVE
		SILENT CHECK VALVE (GLOBE STYLE)
		BALL VALVE
		3-WAY BALL VALVE
		4-WAY BALL VALVE
		CONE VALVE
		NEEDLE VALVE
		PINCH VALVE
		DIAPHRAGM VALVE
		BUTTERFLY VALVE
		PLUG VALVE
		3-WAY PLUG VALVE
		4-WAY PLUG VALVE
		CHECK VALVE, GENERAL SYMBOL
		BALL CHECK VALVE
		DOUBLE DOOR CHECK VALVE
		SOLENOID VALVE
		3-WAY SOLENOID VALVE
		4-WAY SOLENOID VALVE
		FLAP VALVE
		SHEAR GATE
		MUD VALVE
		CYLINDER ACTUATOR H=HYDRAULIC P=PNEUMATIC
		DIAPHRAGM ACTUATOR
		ELECTRIC MOTOR ACTUATOR
		SOLENOID ACTUATOR
		REDUCER OR REDUCING BUSHING
		RUPTURE DISK
		Y-STRAINER
		DIRECTION OF FLOW
		PULSATION DAMPENER
		FLEXIBLE CONNECTION
		PLAIN END PIPE COUPLING
		FLEXIBLE COUPLING
		PIPE DOWN
		PIPE UP

TYPICAL FITTING SYMBOLS

CH2M HILL
P. O. BOX 21647
TAMPA, FLORIDA 33622-1647

PROJECT RECORD

DESIGNED J.L.S.	Berryman & Henigar		CITRUS COUNTY CENTRAL LANDFILL LEACHATE STORAGE TANK	STANDARD SYMBOLS AND ABBREVIATIONS	JOB NO. 45085
DRAWN J.L.S.	BSI Consultants, Inc. ▪ Henigar & Ray, Inc.				FILE NO. 5A-345
CHECKED G.J.M.	640 EAST HIGHWAY 44 • CRYSTAL RIVER, FLORIDA 34429-4399 • (904) 795-6551				SEC 1
DATE JAN.1995		NO / DATE / REVISION / APP'D. BY: 3/1/95 GENERAL REVISION A.D.M.		GEORGE J. McDONALD, P.E. REGISTERED ENGINEER NO. 44740 STATE OF FLORIDA DATE	TWP 19S RGE 18E
					SHT G-3

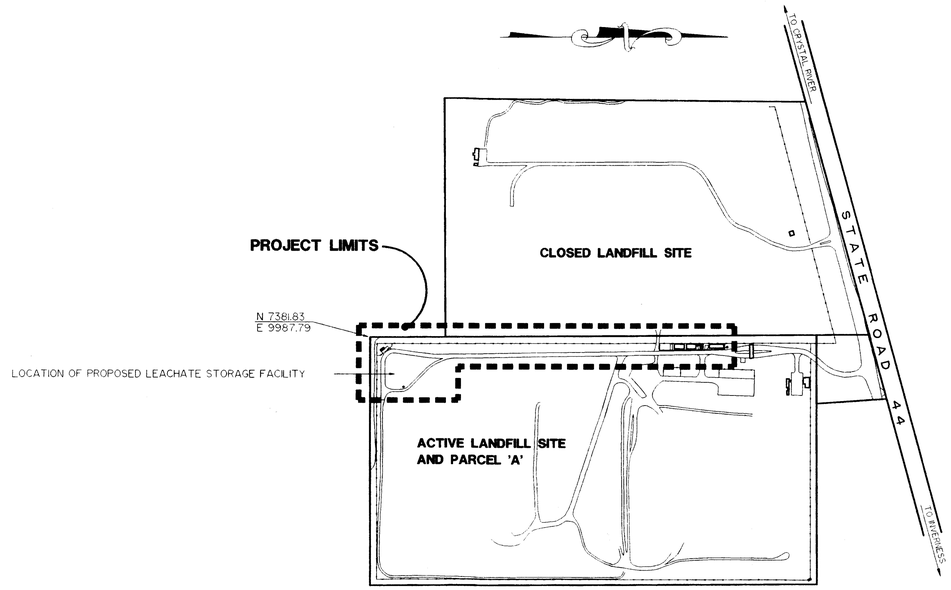

PLOT PLAN

NOT TO SCALE

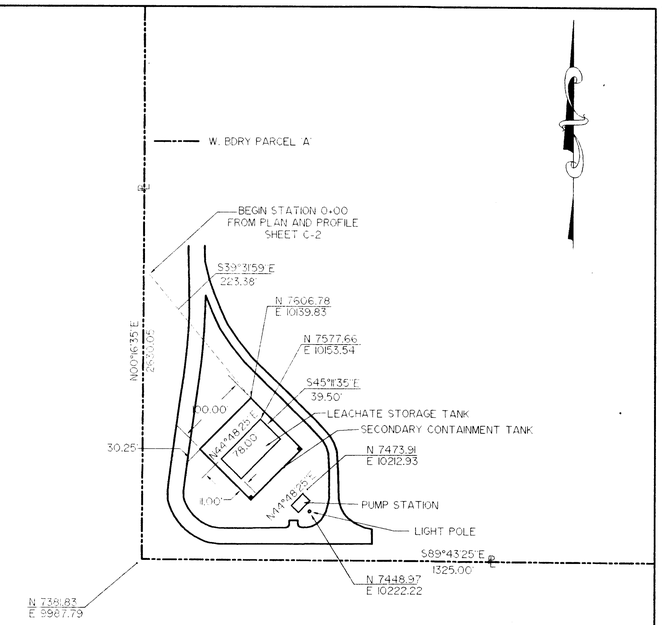

GEOMETRY PLAN

SCALE: 1" = 100'

NOTE:
NORTHING AND EASTING SHOWN ON THIS SHEET ARE BASED ON STATE PLANE COORDINATES.

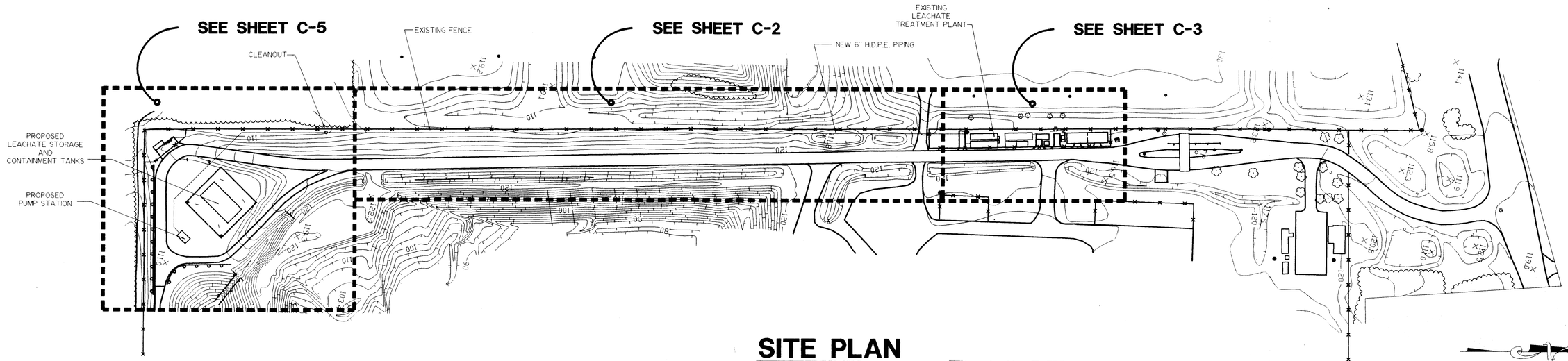

SITE PLAN

SCALE: 1" = 100'

SCALE: 1" = 100'

CH2M HILL
P. O. BOX 21647
TAMPA, FLORIDA 33622-1.47

Steven A. Lawrence
STATE OF FLORIDA
REGISTERED

PROJECT RECORD

DESIGNED J.L.S.	**Berryman & Henigar**			CITRUS COUNTY CENTRAL LANDFILL LEACHATE STORAGE TANK	SITE AND GEOMETRY PLAN
DRAWN J.L.S.	BSI Consultants, Inc. ▪ Henigar & Ray, Inc.				
CHECKED G.J.M.	640 EAST HIGHWAY 44 • CRYSTAL RIVER, FLORIDA 34429-4399 • (904) 795-6551				
DATE APRIL 7, 1995		NO.	DATE	REVISION	APP'D. BY
			3/1/95	GENERAL REVISION	A.D.M.

GEORGE J. McDONALD, P.E.
REGISTERED ENGINEER NO. 44740
STATE OF FLORIDA
DATE

JOB NO. 45085
FILE NO. 5A-345
SEC 1
TWP 19S RGE 18E
SHT. C-1

MATCH LINE STA. 0+00 - SEE SHEET C-5

MATCH LINE STA. 12+00 - SEE SHEET C-3

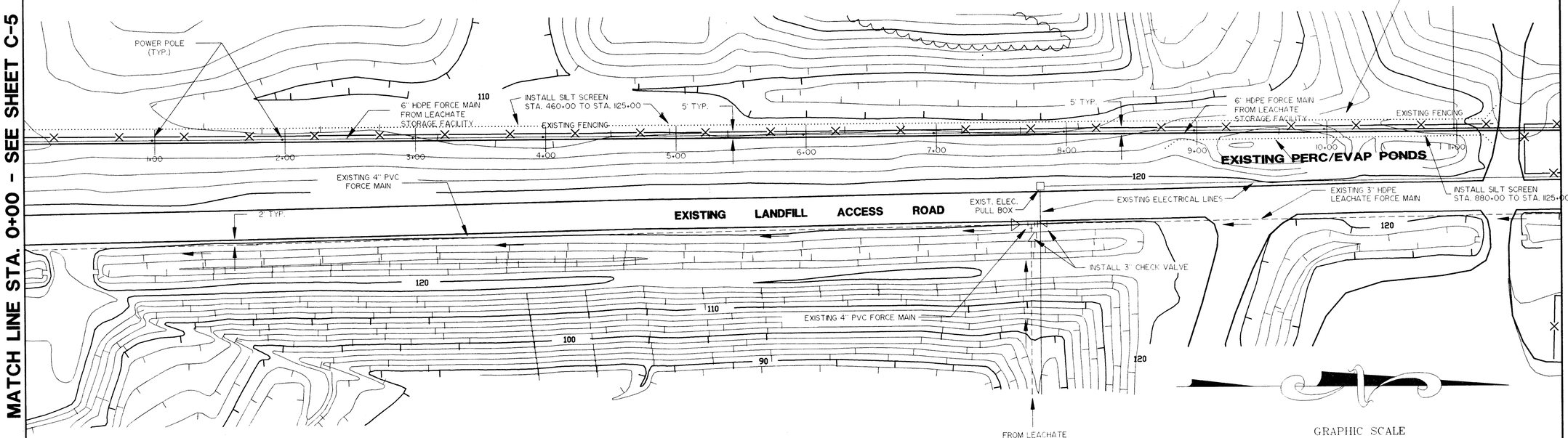

NOTE
CONTRACTOR TO AVOID CONFLICT WITH ALL EXISTING IRRIGATION PIPING

NOTE
SOD ALL DISTURBED AREAS WITHIN 6' OF EXISTING PERC/EVAP PONDS AND SEED AND MULCH ALL REMAINING DISTURBED AREAS THIS SHEET.

PLAN

SCALE: 1" = 40'

GRAPHIC SCALE

(IN FEET)
1 inch = 40 ft

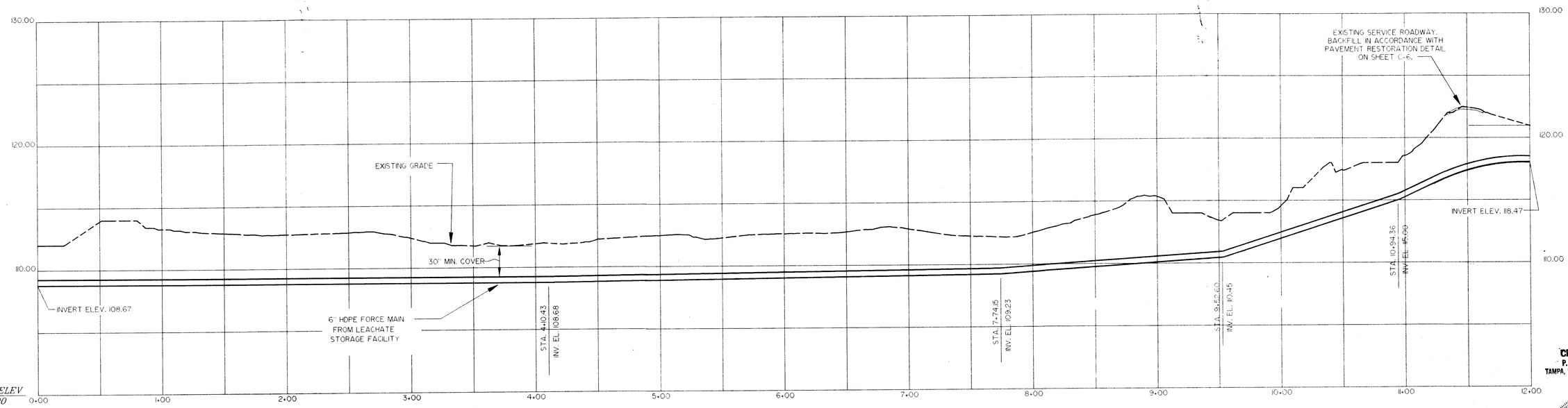

NOTE:
ALL ELEVATIONS SHOWN ARE REFERENCED TO NGVD.

PROJECT RECORD

PROFILE

HORIZONTAL SCALE: 1" = 40'
VERTICAL SCALE: 1" = 4'

NOTE:
CONTRACTOR TO MAINTAIN UNIFORM GRADE ON FORCE MAIN BETWEEN ELEVATION CALL-OUTS.

CH2M HILL
P. O. BOX 21647
TAMPA, FLORIDA 33622-1647

STACEY L. SAYLOR
STATE OF FLORIDA
REGISTERED

DESIGNED KC
DRAWN KC
CHECKED G.J.M.
DATE APRIL 7, 1995

Berryman & Henigar
BSI Consultants, Inc. ▪ Henigar & Ray, Inc.
640 EAST HIGHWAY 44 • CRYSTAL RIVER, FLORIDA 34429-4399 • (904) 795-6551

NO.	DATE	REVISION	APP'D. BY
	3/1/95	GENERAL REVISION	A.D.M.

CITRUS COUNTY CENTRAL LANDFILL
LEACHATE STORAGE TANK

FORCE MAIN
PLAN AND PROFILE
STA. 0+00 to 12+00

GEORGE J. McDONALD, P.E.
REGISTERED ENGINEER NO. 44740
STATE OF FLORIDA
DATE

JOB NO. 45085
FILE NO. 5A-345
SEC 1
TWP 19S RGE 18E
SHT. C-2

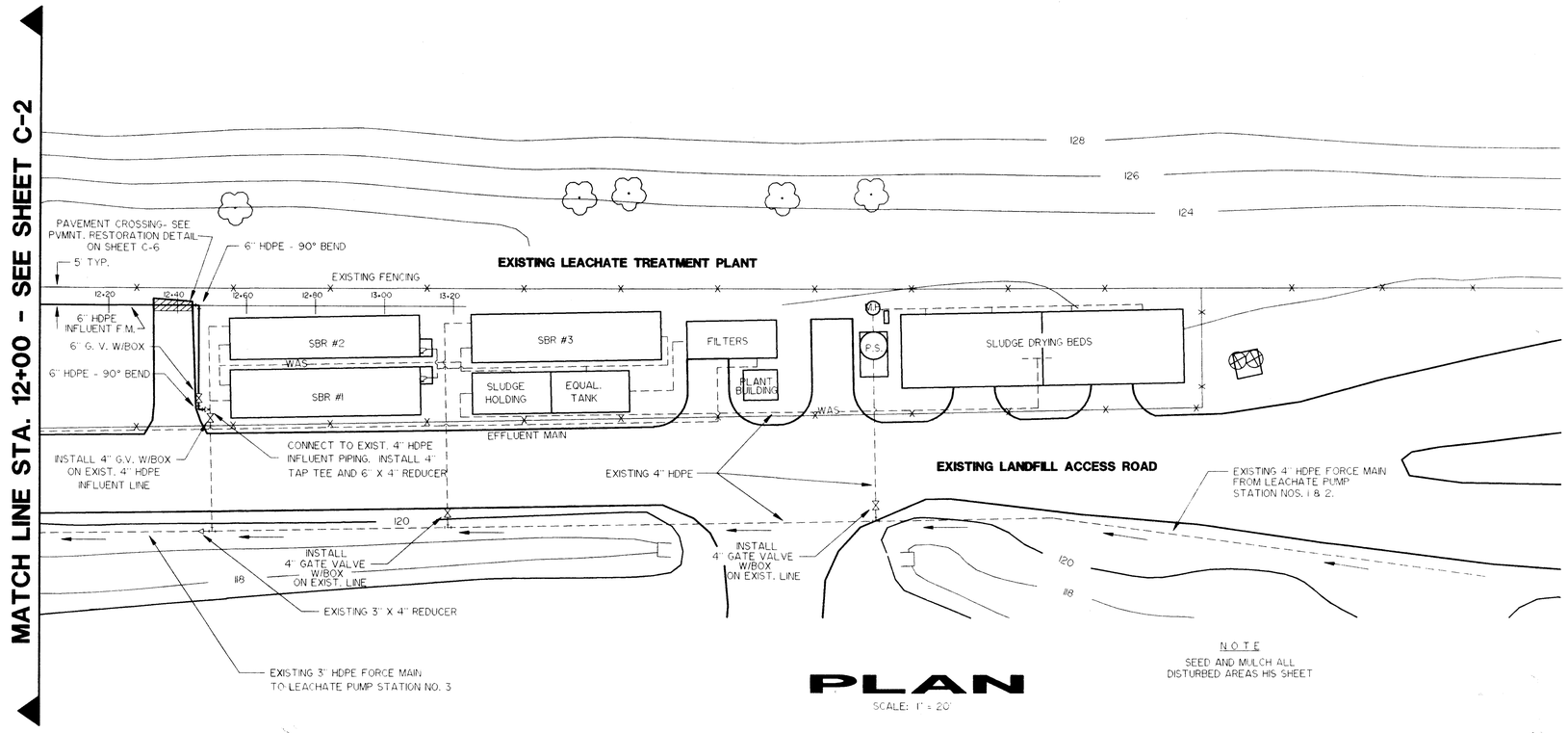

PLAN

SCALE: 1" = 20'

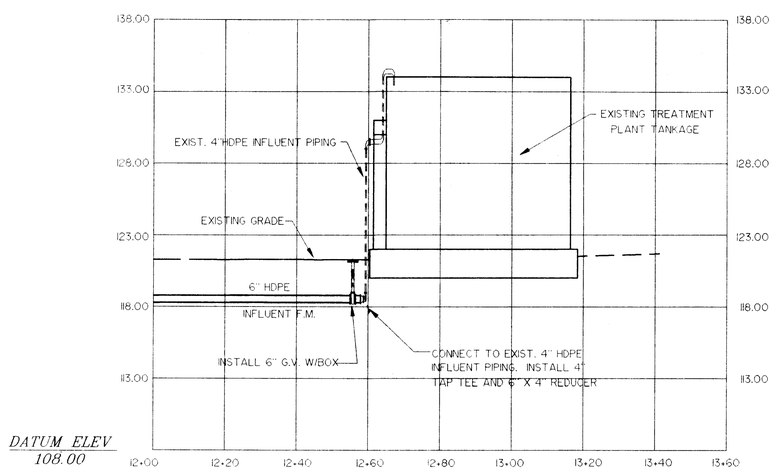

PROFILE

HORIZONTAL SCALE: 1" = 20'
VERTICAL SCALE: 1" = 5'

CH2M HILL
P. O. BOX 21647
TAMPA, FLORIDA 33622-1647

PROJECT RECORD

DESIGNED K.C.	Berryman & Henigar BSI Consultants, Inc. ▪ Henigar & Ray, Inc. 640 EAST HIGHWAY 44 • CRYSTAL RIVER, FLORIDA 34429-4399 • (904) 795-6551	NO. / DATE / REVISION / APP'D. BY 3/1/95 GENERAL REVISION A.D.M.	CITRUS COUNTY CENTRAL LANDFILL LEACHATE STORAGE TANK	FORCE MAIN PLAN AND PROFILE STA. 12+00 to 13+60	JOB NO. 45085 FILE NO. 5A-345 SEC 1 TWP 19S RGE 18E
DRAWN K.C.				GEORGE J. McDONALD, P.E. REGISTERED ENGINEER NO. 44740 STATE OF FLORIDA DATE	
CHECKED G.J.M.					
DATE APRIL 7, 1995					SHT C-3

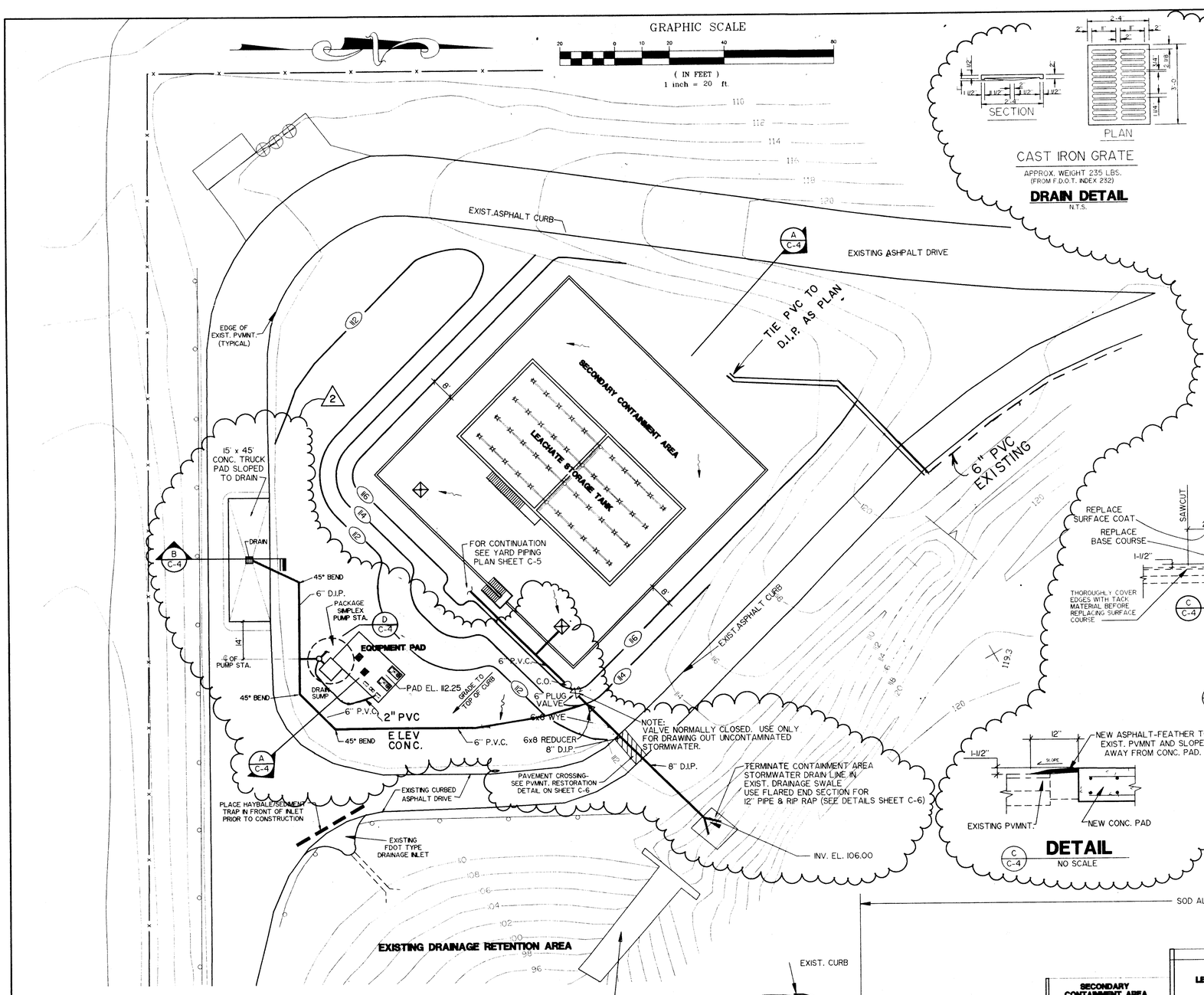

GRADING PLAN

SCALE: 1" = 20'

CAST IRON GRATE

APPROX. WEIGHT 235 LBS. (FROM F.D.O.T. INDEX 232)

DRAIN DETAIL

N.T.S.

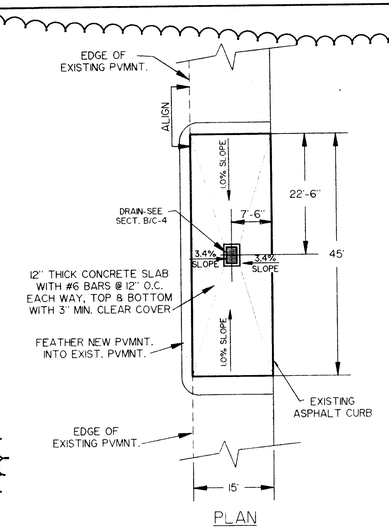

CONCRETE TRUCK PAD DETAIL

N.T.S.

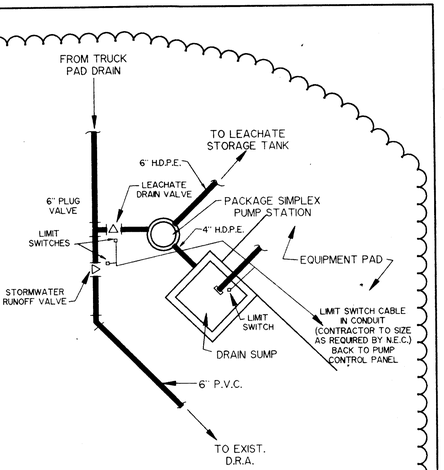

SECTION

NO SCALE

NOTES

1. THE LEACHATE TRUCK LOADING STATION CAMLOCK FITTING COVER SHALL BE FITTED WITH A LIMIT SWITCH TO SIGNAL ITS BEING REMOVED.
2. THE LEACHATE DRAIN AND STORMWATER RUNOFF VALVES SHALL BE FITTED WITH LIMIT SWITCHES MOUNTED ON THE VALVE BONNETS TO SIGNAL WHETHER THEY ARE OPEN OR CLOSED.
3. THE REMOVAL OF THE TRUCK LOADING STATION CAMLOCK FITTING COVER SHALL CAUSE AN AUDIO AND VISUAL ALARM CONDITION IF THE LEACHATE DRAIN VALVE IS NOT OPEN AND THE STORMWATER RUNOFF VALVE IS CLOSED.
4. THE PUMP STATION CONTROL PANEL FOR THE SIMPLEX PUMP STATION SHALL HAVE RED AND GREEN INDICATOR LIGHTS FOR EACH OF THE FOLLOWING:
   A. THE TRUCK LOADING CAMLOCK FITTING
   B. STORMWATER DRAIN VALVE.
   C. LEACHATE DRAIN VALVE.

   GREEN LIGHT WILL INDICATE AN OPEN CONDITION AND A RED LIGHT WILL INDICATE A CLOSED CONDITION.

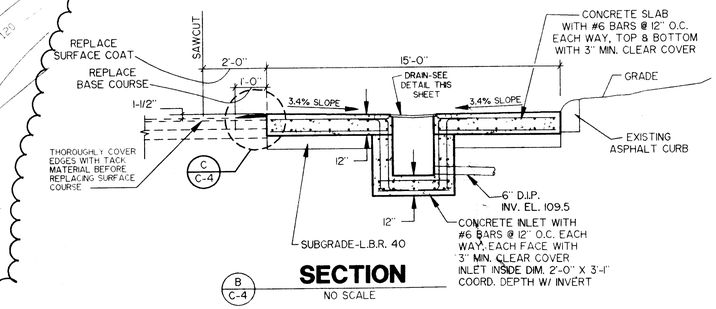

SECTION

NO SCALE

DETAIL

NO SCALE

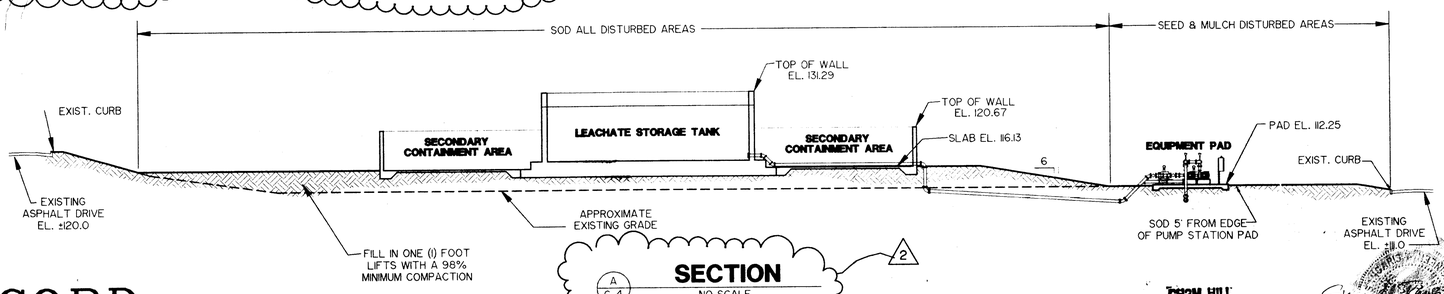

SECTION

NO SCALE

NOTES

1. EXISTING TOPOGRAPHY BASED ON DATA FURNISHED BY CH2M HILL.
2. EXISTING TOPOGRAPHY MAY HAVE CHANGED DUE TO ON-SITE ACTIVITIES. THE CONTRACTOR SHALL FIELD VERIFY EXISTING TOPOGRAPHY PRIOR TO CONSTRUCTION.

PROJECT RECORD

CH2M HILL
P. O. BOX 21647
TAMPA, FLORIDA 33622-1647

NO.	DATE	REVISION	APP'D. BY
2	10/17/95	ADDED TRUCK PAD	A.D.M.
1	3/1/95	GENERAL REVISION	A.D.M.

DESIGNED G.J.M.
DRAWN J.L.S.
CHECKED G.J.M.
DATE APRIL 7, 1995

Berryman & Henigar
BSI Consultants, Inc. ▪ Henigar & Ray, Inc.
640 EAST HIGHWAY 44 • CRYSTAL RIVER, FLORIDA 34429-4399 • (904) 795-6551

CITRUS COUNTY CENTRAL LANDFILL
LEACHATE STORAGE TANK

LEACHATE TANK GRADING PLAN

GEORGE J. McDONALD, P.E.
REGISTERED ENGINEER NO. 44740
STATE OF FLORIDA
DATE

JOB NO. 45085
FILE NO. 5A-345
SEC 1
TWP 19S RGE 18E
SHT C-4

MATCH LINE-BEGIN STA. 0+00 - SEE SHEET C-2

PIPING SCHEDULE

1. 8" DIA. PVC
2. 8" x 6" DIA. MJ REDUCER
3. 6" DIA. HDPE PIPE
4. 6" DIA. FE PLUG VALVE
5. 6" STEEL SCH 40 PIPE
6. 6" PVC C-900 DR 18 PIPE
7. 6" DIA. MJ CROSS
8. CLEANOUT
9. DRAIN PUMP OUT W/CAMLOCK
10. 6" D.I. PIPE
11. 2" HDPE PIPE

GRAPHIC SCALE

20 0 10 20 40 80

(IN FEET)
1 inch = 20 ft.

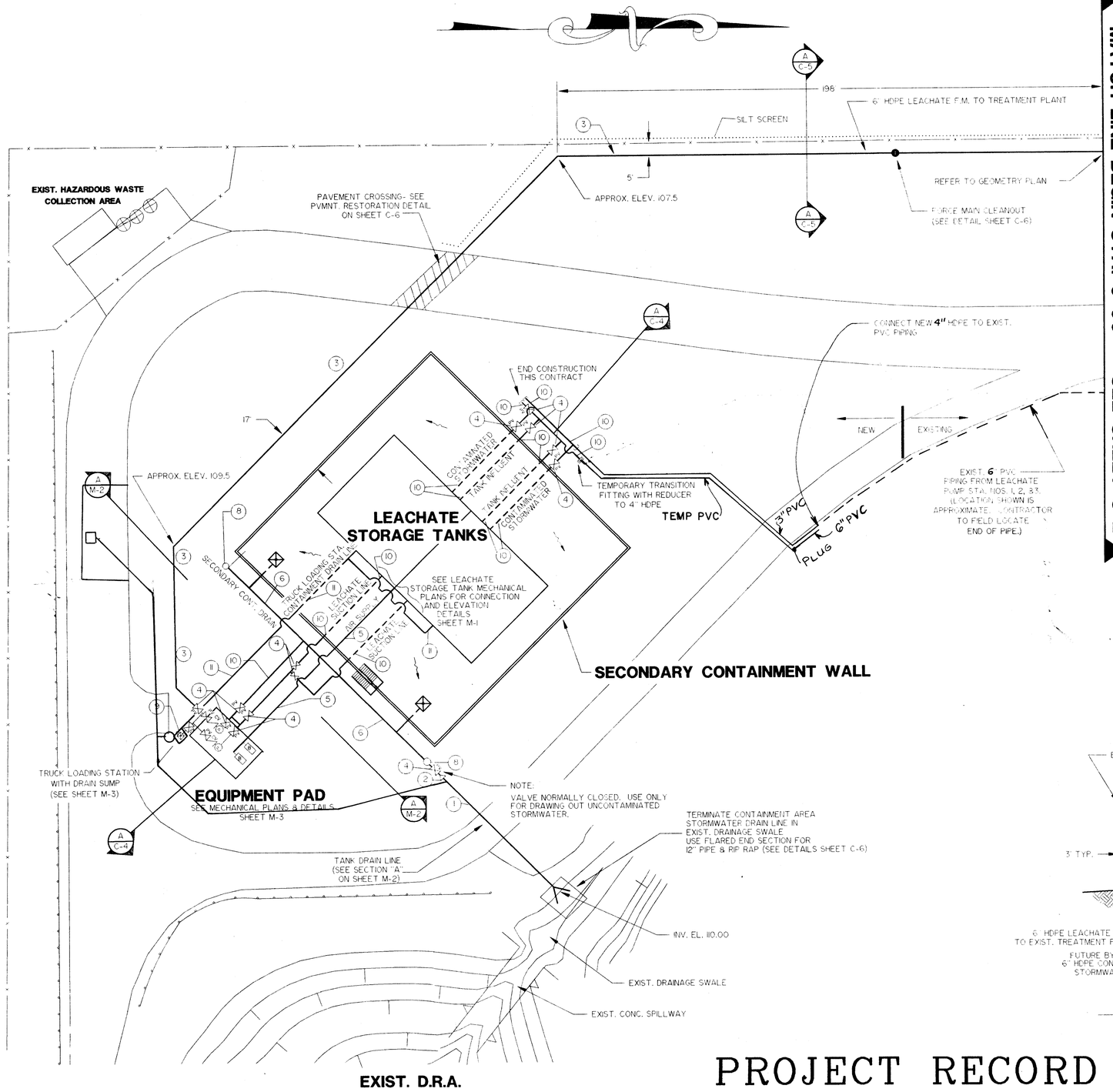

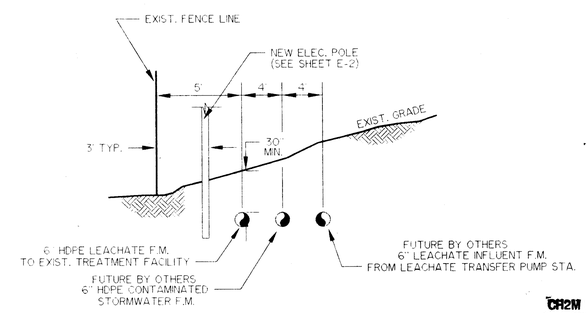

SECTION A/C-5

NOT TO SCALE

CH2M HILL
P. O. BOX 21647
TAMPA, FLORIDA 33622-1647

PROJECT RECORD

DESIGNED KC
DRAWN KC
CHECKED GJM
DATE APRIL 7, 1995

Berryman & Henigar
BSI Consultants, Inc. ▪ Henigar & Ray, Inc.
640 EAST HIGHWAY 44 • CRYSTAL RIVER, FLORIDA 34429-4399 • (904) 795-6551

NO.	DATE	REVISION	APP'D BY
	3/1/95	GENERAL REVISION	A.D.M.

CITRUS COUNTY CENTRAL LANDFILL
LEACHATE STORAGE TANK

LEACHATE STORAGE TANK YARD PIPING PLAN

GEORGE J. McDONALD, P.E.
REGISTERED ENGINEER NO. 44740
STATE OF FLORIDA
DATE

JOB NO. 45085
FILE NO. 5A-345
SEC. 1
TWP 19S RGE 18E
SHT C-5

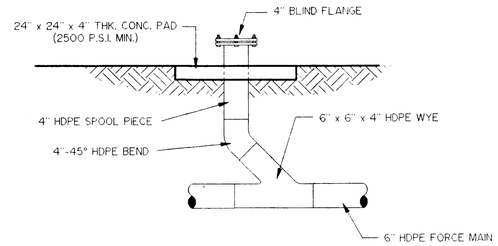

FORCE MAIN CLEANOUT

N.T.S.

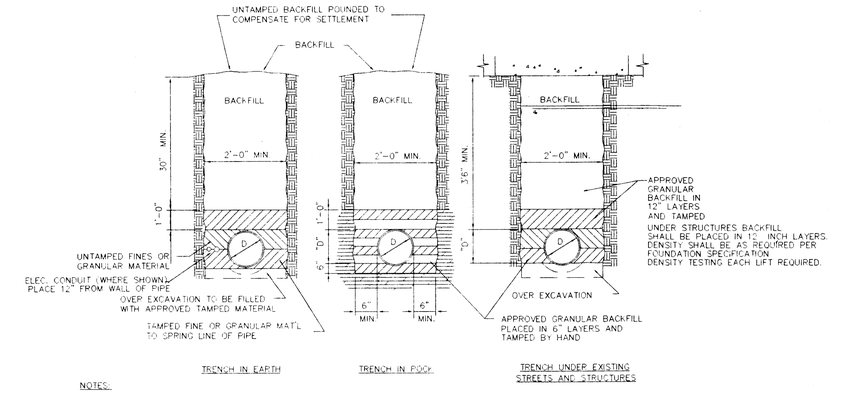

NOTES:

1. TRENCHES SHALL BE AS NARROW AS POSSIBLE TO ALLOW FOR SAFE AND PROPER MAIN INSTALLATION. TRENCH SIDES SHALL BE VERTICAL TO A POINT 1'-0" ABOVE THE TOP OF THE PIPE. ABOVE THE POINT SLOPED SIDES MAY BE USED IF CONDITIONS PERMIT, BUT SHOULD BE KEPT AS NEARLY VERTICAL AS POSSIBLE.
2. FOR TRENCH IN CINDER FILLS, GARBAGE DUMPS, SALT MARSHES, MUCK SOILS OR PLACES WHERE HARMFUL CORROSIVE CONDITIONS OI OR STEEL PIPE SHALL BE PROTECTED WITH AT LEAST 10" OF SAND OR LIMSTONE SCREENINGS ON ALL SIDES AND TAMPED BY HAND IN 6" LAYERS. SEE SPECIFICATIONS. NO ADDITIONAL COMPENSATION FOR CORROSION PROTECTION OF A PIPE WILL BE ALLOWED.
3. FOR OPEN-CUTS OF EXISTING PAVEMENT, WHERE PERMITTED, THE PAVEMENT REPLACEMENT SHALL INCORPORATE 6" THICK CONCRETE SLAB BRIDGE ON NOT LESS THAN 1'-0" OF UNDISTURBED SUB-GRADE ON EITHER SIDE OF TRENCH AND CONSTRUCTED TO PROVIDE FOR TYPE AND THICKNESS OF WEARING SURFACE TO MATCH EXISTING PAVEMENT.

TRENCH DETAILS

N.T.S.

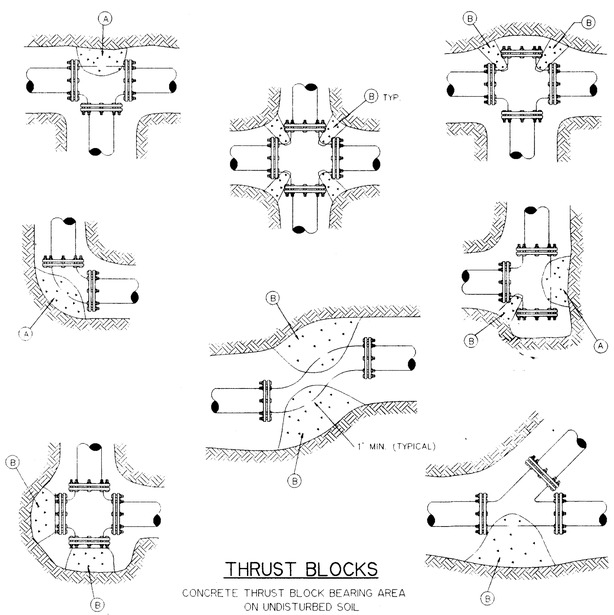

THRUST BLOCKS

CONCRETE THRUST BLOCK BEARING AREA ON UNDISTURBED SOIL

PIPE SIZE	90° ELL	45° ELL	VALVES, TEES, DEAD ENDS (A)	(B)
4	2	1	1.5	1
6	4	2	3	2
8	6	3	6	4
10	9	5	9	6
12	12	7	12	8
14	16	9	16	10
16	20	12	20	12
18	25	15	25	18
24	44	26	44	30

BASIS FOR TABLE VALUES:

AREAS ARE BASED ON A MINIMUM SOIL BEARING PRESSURE ON UNDISTURBED EARTH OF 2000 psf AND 150 psi INTERNAL TEST PRESSURE.

NOTES:

1. WHERE FIELD TESTING INDICATES SOIL BEARING CAPACITY LESS THAN 2000 psf BEARING AREA SHALL BE INCREASED IN ACCORDANCE WITH AWWA STANDARD PRACTICE.
2. POUR THRUST BLOCKS AGAINST UNDISTURBED MATERIAL. WHERE TRENCH WALL HAS BEEN DISTURBED, EXCAVATE LOOSE MATERIAL AND EXTEND THRUST BLOCK TO UNDISTURBED MATERIAL.
3. ON BENDS AND TEES, EXTEND THRUST BLOCK FULL LENGTH.
4. PLACE VISQUEEN WRAP AND BOARD IN FRONT OF ALL PLUGS AND DEAD ENDS BEFORE POURING THRUST BLOCKS.
5. NO COUPLINGS OR JOINTS SHALL BE COVERED WITH CONCRETE.
6. CONCRETE SHALL BE CLASS "B" MIN. 2500 psi STRENGTH AT 28 DAYS.

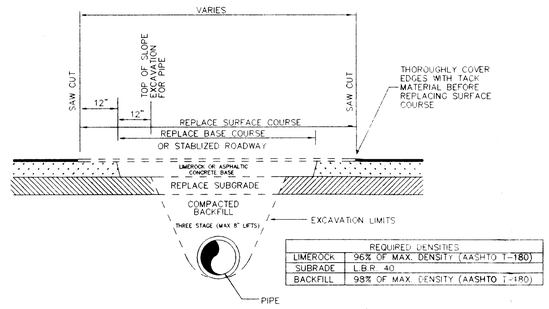

REQUIRED DENSITIES	
LIMEROCK	96% OF MAX. DENSITY (AASHTO T-180)
SUBRADE	L.B.R. 40
BACKFILL	98% OF MAX. DENSITY (AASHTO T-180)

PAVEMENT RESTORATION DETAIL

FOR DRIVEWAYS AND COUNTY ROADWAYS

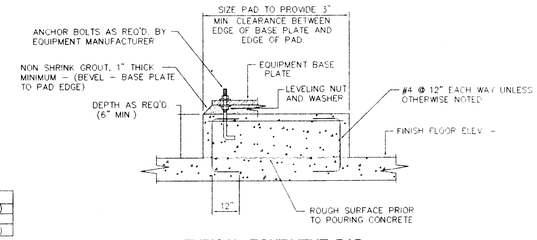

TYPICAL EQUIPMENT PAD AND ANCHORAGE DETAIL

N.T.S.

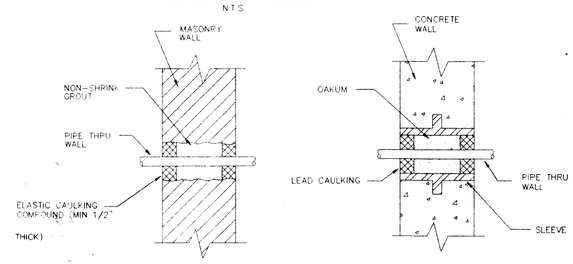

MASONRY WALL PIPE PENETRATION DETAIL

N.T.S.

WALL PENETRATION DETAIL

USE ON WET LOCATIONS, PIPE LESS THAN 3" DIA.

N.T.S.

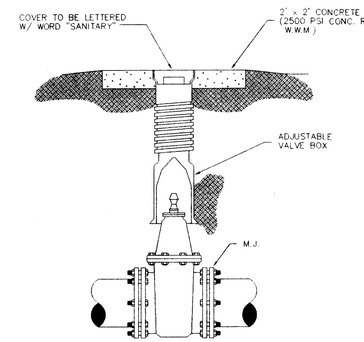

NOTES

1. SET VALVE AND BOX PLUMB, WITH BOX CENTERED ON VALVE.
2. VALVE BOX SHALL NOT BE SUPPORTED BY VALVE OR WATER MAIN.
3. VALVE COVER AND COLLAR SHALL BE PAINTED BROWN.

GATE OR PLUG VALVE W/ VALVE BOX

N.T.S.

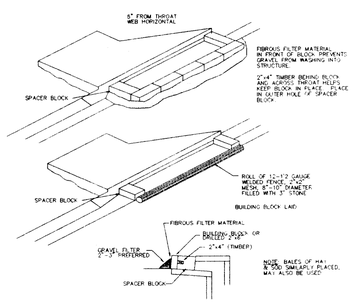

TEMPORARY SEDIMENT TRAP AT STORM DRAIN INLET

N.T.S.

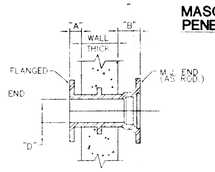

"D" DIA	"A" MIN.	"B" MIN.
3"	5"	2"
4"	5"	2"
6"	6"	3"
8"	6"	3"
10"	6"	3"
12"	6"	3"

WALL PIPE DETAIL

USE ON WET AND ALL VACUUM LOCATIONS FOR WALL AND FLOOR PENETRATIONS

N.T.S.

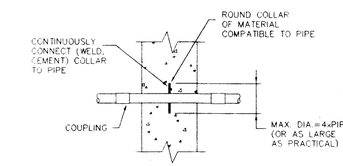

WALL PENETRATION DETAIL

USE AT ALL VACUUM LOCATIONS, PIPE LESS THAN 3" DIA.

N.T.S.

CH2M HILL
P. O. BOX 21647
TAMPA, FLORIDA 33622-1647

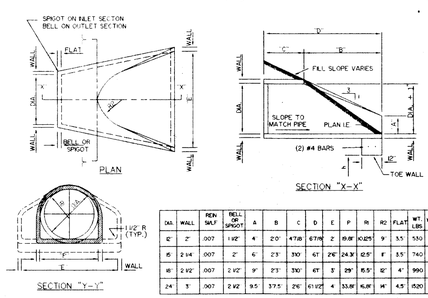

DIA.	WALL	REINF. SHLT	BELL OR SPIGOT	A	B	C	D	E	F	R1	R2	FLAT	WT LBS	TOE WALL L
12"	2"	.007	1 1/2"	4'	2'-0"	4'7.8"	6'7.8"	2'	69.8"	10.875"	9"	3.5'	530	12"
15"	2 1/4"	.007	2"	6'	2'-3"	3'10"	6'1"	2'6"	24.3"	12.5"	1'	3.5'	740	12"
18"	2 1/2"	.007	2 1/2"	9'	2'-3"	3'10"	6'1"	3'	29"	15.5"	12"	4'	990	15"
24"	3"	.007	2 1/2"	9.5'	3'7.5"	2'6"	6'1.25"	4'	33.8"	16.8"	14"	4.5'	1520	18"

FLARED END SECTIONS FOR PIPE CULVERTS

N.T.S.

GENERAL NOTES FOR FLARED END SECTIONS:

1. END SECTIONS SHALL CONFORM TO THE REQUIREMENTS OF A.S.T.M. C76 WITH THE EXCEPTION THAT DIMENSIONS AND REINFORCING SHALL BE AS PRESCRIBED IN THE TABLE ABOVE. CIRCUMFERENTIAL REINFORCEMENT MAY CONSIST OF EITHER ONE CAGE OR TWO CAGES OF STEEL. COMPRESSIVE STRENGTH OF CONCRETE SHALL BE 4000 PSI.
2. CONNECTIONS BETWEEN END SECTION AND PIPE CULVERT MAYBE ANY OF THE FOLLOWING:
   a. JOINTS MEETING THE REQUIREMENTS OF SECTION 948.45 OF THE "STANDARD SPECIFICATIONS".
   b. JOINTS SEALED WITH PREFORMED PLASTIC GASKETS W

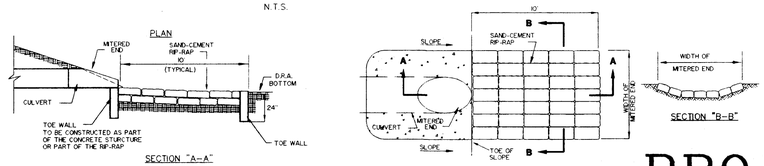

RIP-RAP DETAIL

N.T.S.

PROJECT RECORD

NO.	DATE	REVISION	APP'D. BY
	3/1/95	GENERAL REVISION	A.D.M.

DESIGNED G.J.M.
DRAWN G.J.M.
CHECKED G.J.M.
DATE APRIL 7, 1995

Berryman & Henigar
BSI Consultants, Inc. ▪ Henigar & Ray, Inc.
640 EAST HIGHWAY 44 • CRYSTAL RIVER, FLORIDA 34429-4399 • (904) 795-6551

CITRUS COUNTY CENTRAL LANDFILL
LEACHATE STORAGE TANK

MISCELLANEOUS DETAILS

GEORGE J. McDONALD, P.E.
REGISTERED ENGINEER NO. 44740
STATE OF FLORIDA
DATE

JOB NO. 45085
FILE NO. 5A-345
SEC. 1
TWP 19S RGE 18E
SHT. C-6

PROJECT RECORD

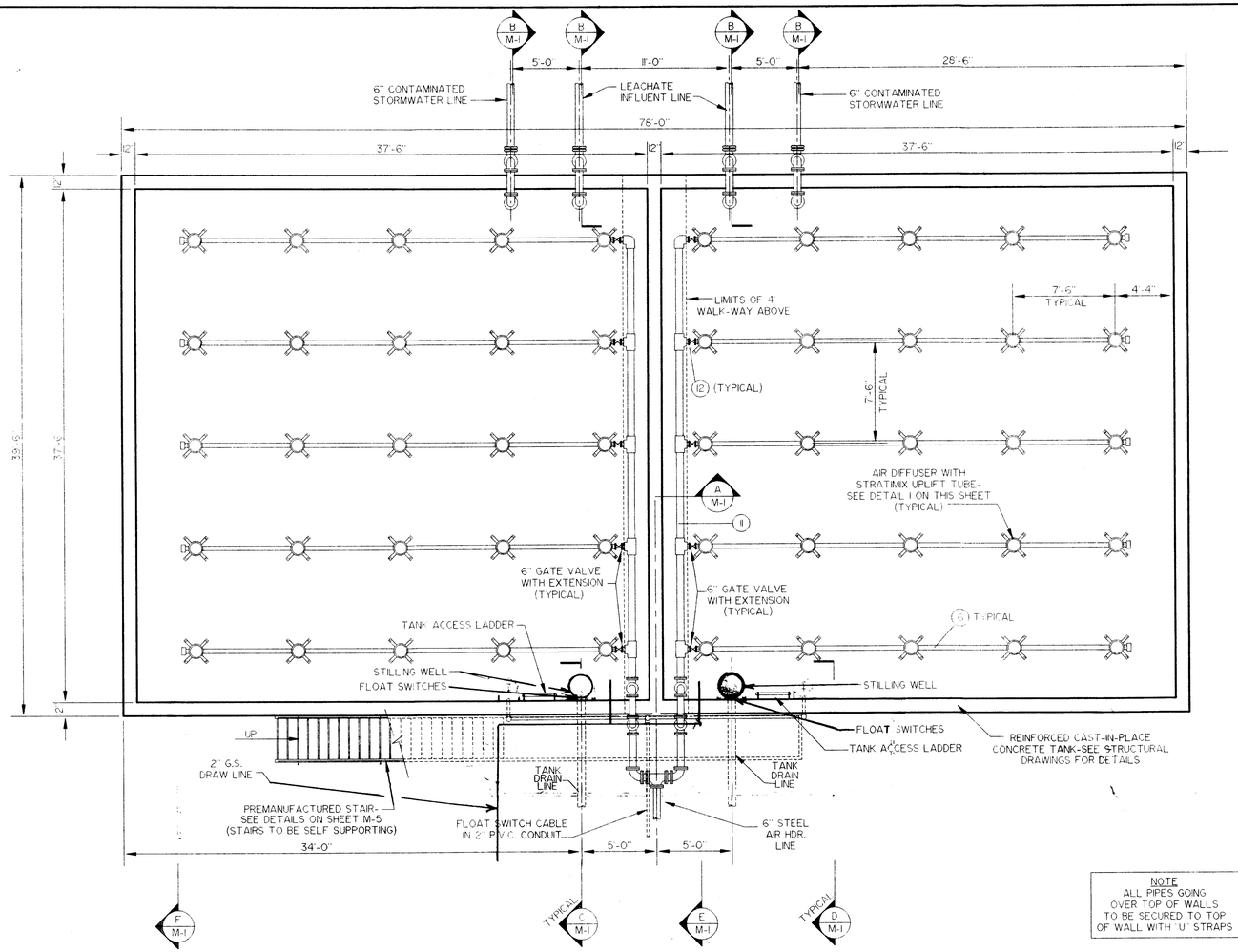

MECHANICAL PLAN

SCALE: 1" = 5'

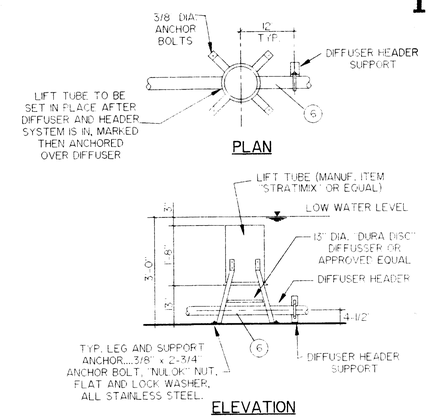

DETAIL

TYPICAL STRATIMIX

SCALE: 1" = 2'

PIPING SCHEDULE

1	6" D.I.P.
2	6" F.E. 90° BEND
3	6" D.I.P./P.V.C. FLANGE ADAPTER
4	6" P.V.C. C-900 DR18
5	6" M.J. 90° BEND
6	3" SCH. 40 P.V.C.
7	S.S. SUPPORT BRACKETS GRINNEL OR EQUAL
8	6" D.I.P. WALL PIPE
9	6" PLUG VALVE
10	6" F.E. 90° BEND
11	6" SCH. 40 P.V.C.
12	3" DOUBLE DISC NRS GATE VALVE (MJ X MJ ENDS)

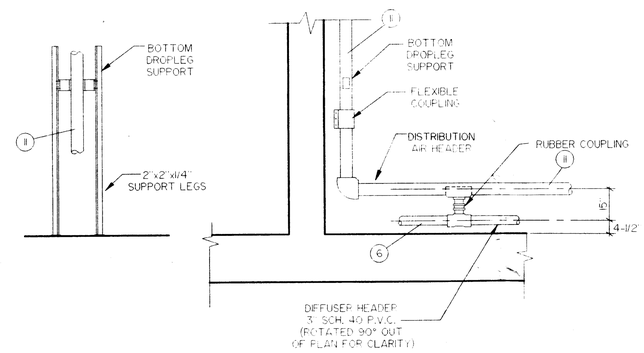

DETAIL

AIR HEADER

SCALE: 1" = 2'

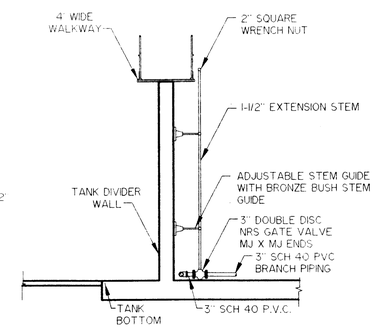

SECTION

SCALE: 1" = 5'

NOTE
ALL PIPES GOING OVER TOP OF WALLS TO BE SECURED TO TOP OF WALL WITH "U" STRAPS

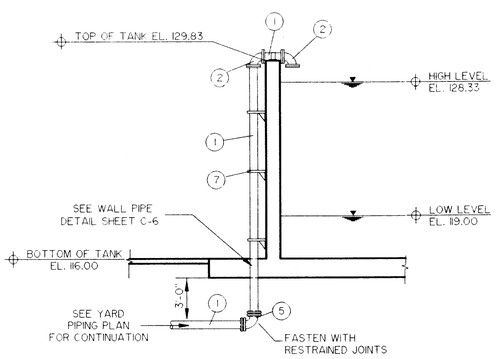

SECTION

SCALE: 1" = 5'

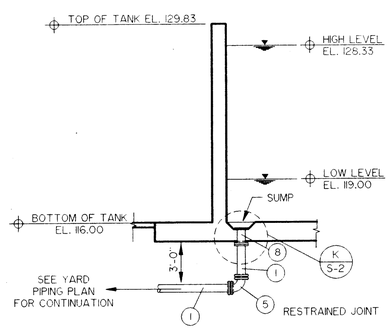

SECTION

SCALE: 1" = 5'

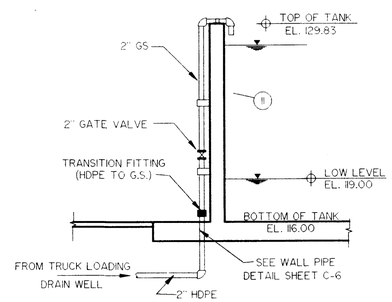

SECTION

SCALE: 1" = 5'

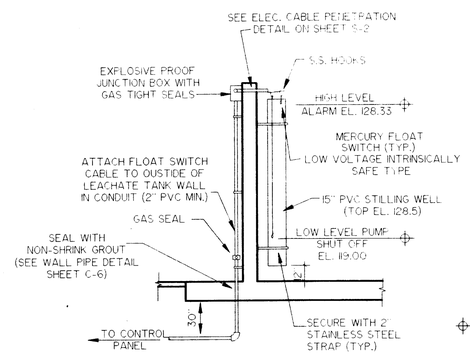

FLOAT SWITCH DETAIL

SCALE: 1" = 5'

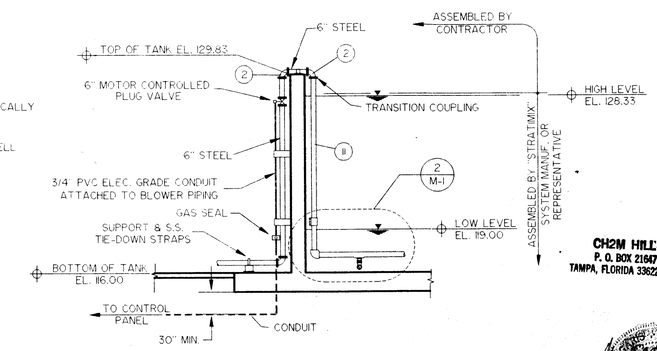

SECTION

SCALE: 1" = 5'

CH2M HILL
P. O. BOX 21647
TAMPA, FLORIDA 33622-1647

DESIGNED G.J.M.	Berryman & Henigar		CITRUS COUNTY CENTRAL LANDFILL LEACHATE STORAGE TANK	LEACHATE STORAGE TANK MECHANICAL PLAN and DETAILS	JOB NO. 45085
DRAWN J.L.S.	BSI Consultants, Inc. ▪ Henigar & Ray, Inc.				FILE NO. 5A-345
CHECKED G.J.M.	640 EAST HIGHWAY 44 • CRYSTAL RIVER, FLORIDA 34429-4399 • (904) 795-6551			GEORGE J. McDONALD, P.E. REGISTERED ENGINEER NO. 44740 STATE OF FLORIDA DATE	SEC. 1 TWP 19S RGE 18E
DATE APRIL 7, 1995		NO. 3/1/95 GENERAL REVISION A.D.M.			SHT. M-1
		NO. DATE REVISION APP'D. BY			

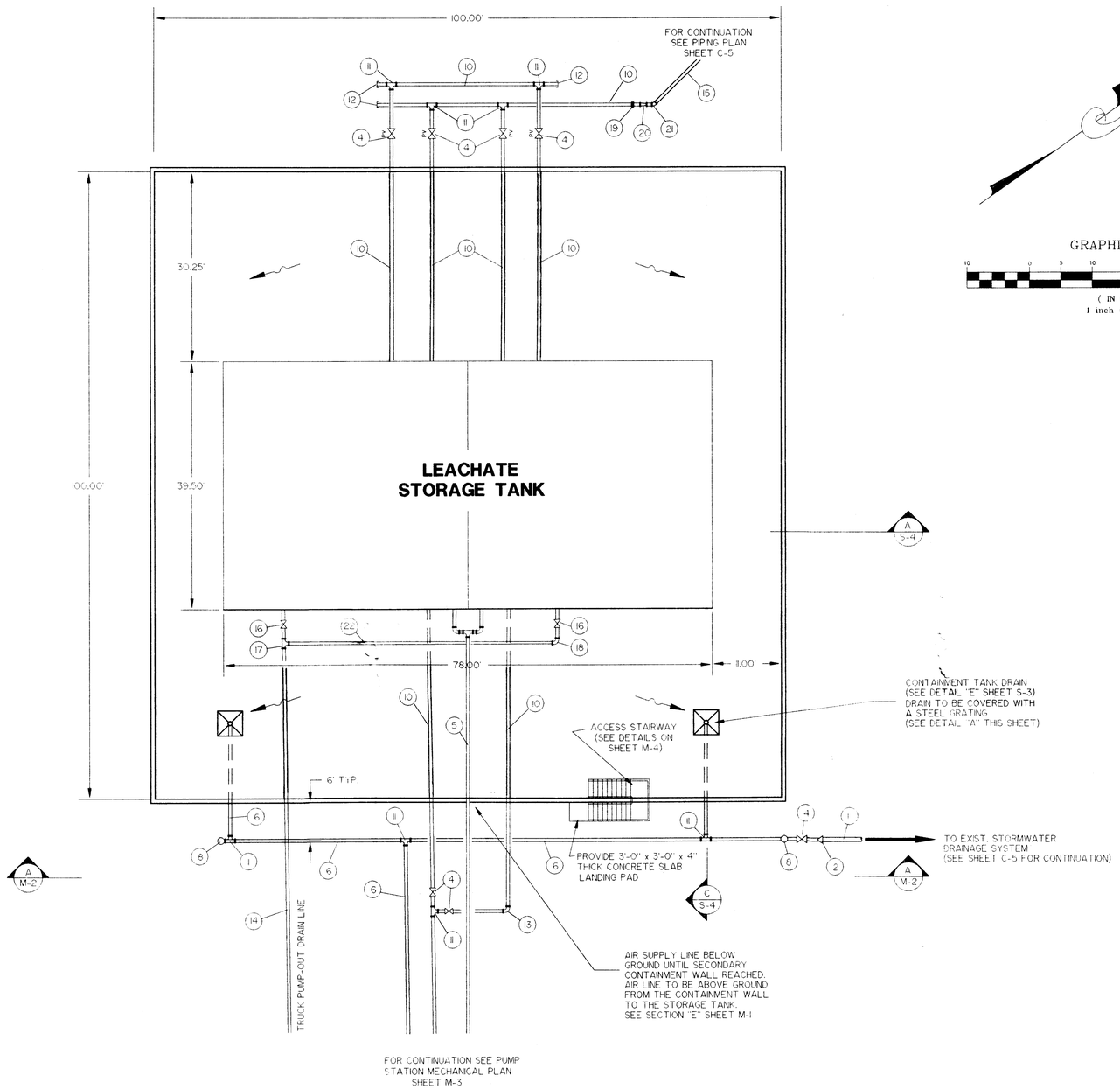

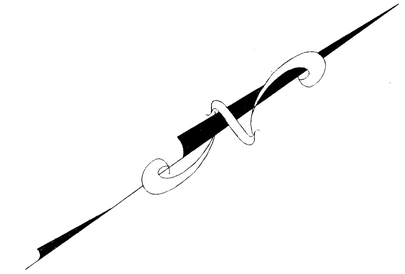

GRAPHIC SCALE

(IN FEET)
1 inch = 10 ft.

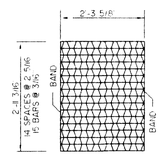

STRAIGHT BARS 2" x 3/16"
RETICULINE BARS 1 1/4" x 3/16"
BANDS 1 1/2" x 1/4"
APPROX. WEIGHT 180 LBS.

ALUMINUM GRATE

A M-2 **DETAIL**
TYPE "C" INLET
SCALE: 1/2" = 1'-0"

PIPING SCHEDULE

1. 8" DIA. PVC
2. 8" x 6" DIA. MJ REDUCER
3. 6" DIA. HDPE PIPE
4. 6" DIA. FE PLUG VALVE
5. 6" STEEL SCH 40 PIPE
6. 6" PVC C-900 DR 18 PIPE
7. 6" DIA. MJ CROSS
8. CLEANOUT
9. DRAIN PUMP OUT W/CAMLOCK
10. 6" D.I. PIPE
11. 6" MJ TEE
12. 6" MJ PLUG
13. 6" MJ 90° BEND
14. 2" HDPE PIPE
15. 4" HDPE PIPE
16. 2" GATE VALVE
17. 2" G.S. TEE
18. 2" G.S. 90° BEND
19. TRANSITION FITTING D.I. TO HDPE
20. 6" x 4" HDPE REDUCER
21. 4" HDPE 45° BEND
22. 2" G.S. PIPE

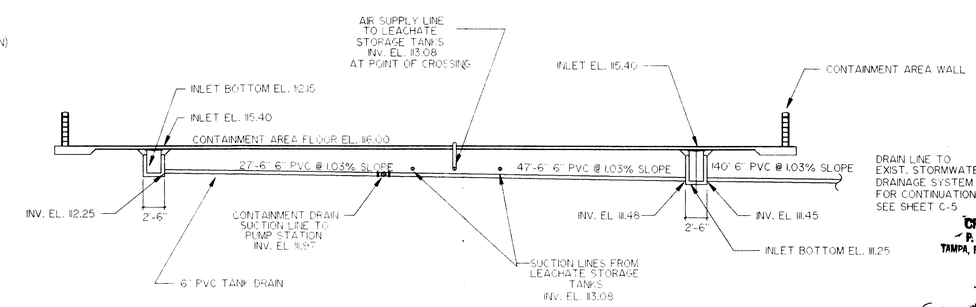

A M-2 **SECTION**
TANK DRAIN PROFILE

CH2M HILL
P. O. BOX 21647
TAMPA, FLORIDA 33622-1647

PROJECT RECORD

DESIGNED KC
DRAWN KC
CHECKED G.J.M.
DATE APRIL 7, 1995

Berryman & Henigar
BSI Consultants, Inc. ▪ Henigar & Ray, Inc.
640 EAST HIGHWAY 44 • CRYSTAL RIVER, FLORIDA 34429-4399 • (904) 795-6551

NO.	DATE	REVISION	APP'D. BY
	3/1/95	GENERAL REVISION	A.D.M.

CITRUS COUNTY CENTRAL LANDFILL
LEACHATE STORAGE TANK

SECONDARY CONTAINMENT MECHANICAL PLAN

GEORGE J. McDONALD, P.E.
REGISTERED ENGINEER NO. 44740
STATE OF FLORIDA
DATE

JOB NO. 45085
FILE NO. 5A-345
SEC. 1
TWP 19S. RGE 18E.
SHT. M-2

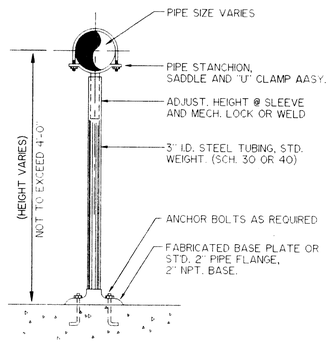

C/M-1 TYPICAL PIPING SUPPORT STANCHION DETAIL

N.T.S.

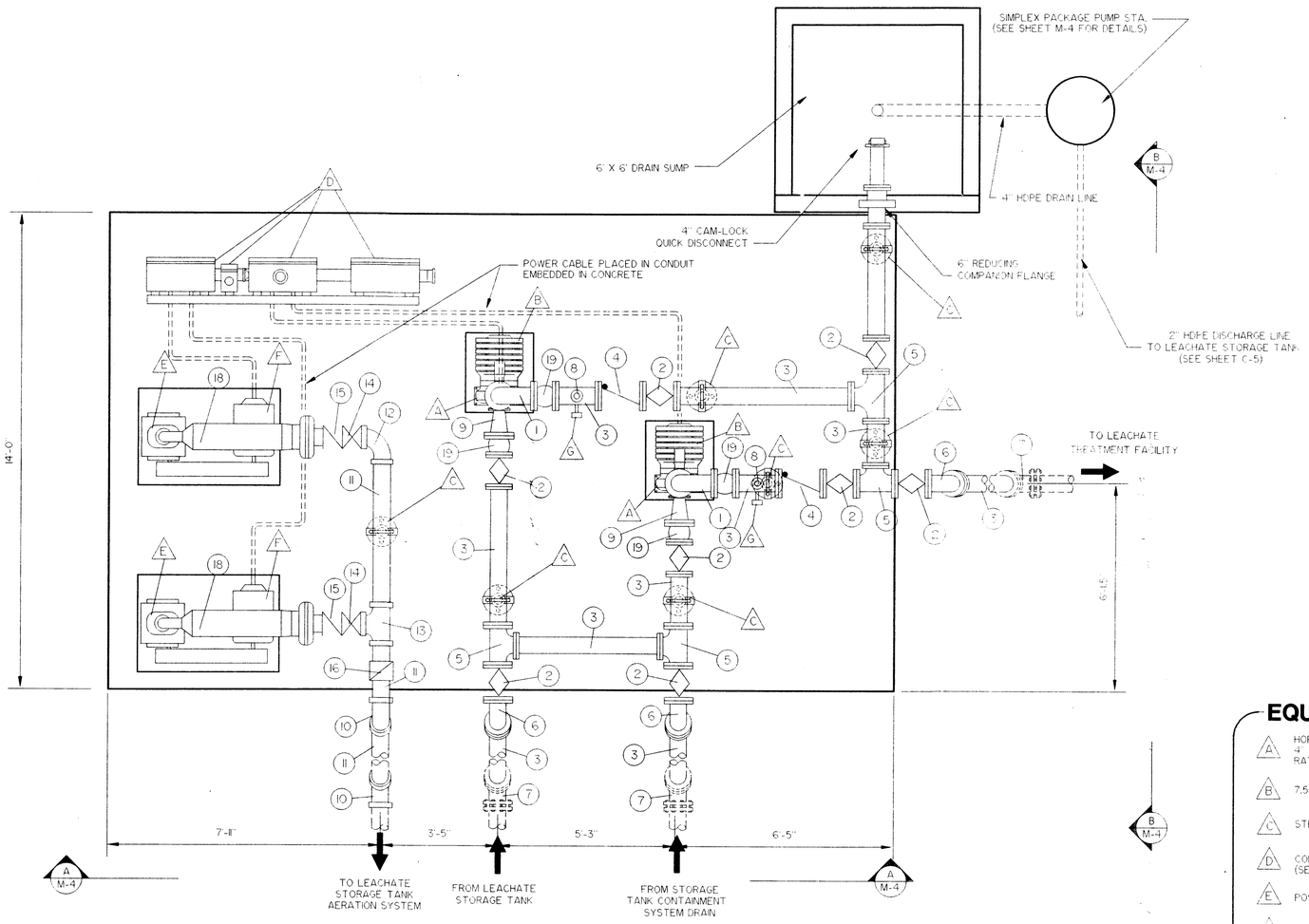

MECHANICAL PLAN

1/2" = 1'-0"

PIPING SCHEDULE

1. 6" DIA. 90° FE BEND
2. 6" DIA. FE PLUG VALVE
3. 6" DIA. DIP FE SPOOL PIECE
4. 6" DIA. FE SLANTING DISC CHECK VALVE
5. 6" x 6" x 6" FE TEE
6. 6" DIA. FE 45° BEND
7. 6" DIA. MJ 45° BEND
8. AIR RELEASE ASSEMBLY
9. 6" X 4" FE CONC. REDUCER
10. 6" DIA. GS 45° BEND
11. 6" DIA. GS AIR PIPING
12. 6" G.S. 90° BEND
13. 6" G.S. TEE
14. 6" ISOLATION VALVE
15. 6" AIR CHECK VALVE
16. 6" PRESSURE RELEASE VALVE
17. PRESSURE GAUGE
18. SILENCER
19. 6" VIBRATION ISOLATION FITTING

EQUIPMENT SCHEDULE

- A — HORIZONTAL CENTRIFUGAL PUMP, CLOSE-COUPLED, 4" INTAKE X 4" DISCHARGE, 350 GPM @ 42 TDH RATING. 3" SOLIDS HANDLING MIN.
- B — 7.5 H.P. ELECTRIC MOTOR
- C — STEEL PIPE STANCHION, W/SADDLE AND U-BOLT.
- D — CONTROL PANEL (NEMA 4X) (SEE ELECTRICAL PLANS & SPECS.)
- E — POSITIVE DISPLACEMENT BLOWER
- F — 20 HP ELECTRIC MOTOR
- G — PRESSURE SWITCH

CH2M HILL
P. O. BOX 21647
TAMPA, FLORIDA 33622-1647

PROJECT RECORD

DESIGNED KC
DRAWN KC
CHECKED G.J.M.
DATE APRIL 7, 1995

Berryman & Henigar
BSI Consultants, Inc. ▪ Henigar & Ray, Inc.
640 EAST HIGHWAY 44 • CRYSTAL RIVER, FLORIDA 34429-4399 • (904) 795-6551

NO.	DATE	REVISION	APP'D. BY
	3/1/95	GENERAL REVISION	A.D.M.

CITRUS COUNTY CENTRAL LANDFILL
LEACHATE STORAGE TANK

LEACHATE PUMPING STATION
MECHANICAL PLAN

GEORGE J. McDONALD, P.E.
REGISTERED ENGINEER NO. 44740
STATE OF FLORIDA
DATE

JOB NO. 45085
FILE NO. 5A-345
SEC. 1
TWP 19S RGE 18E
SHT M-3

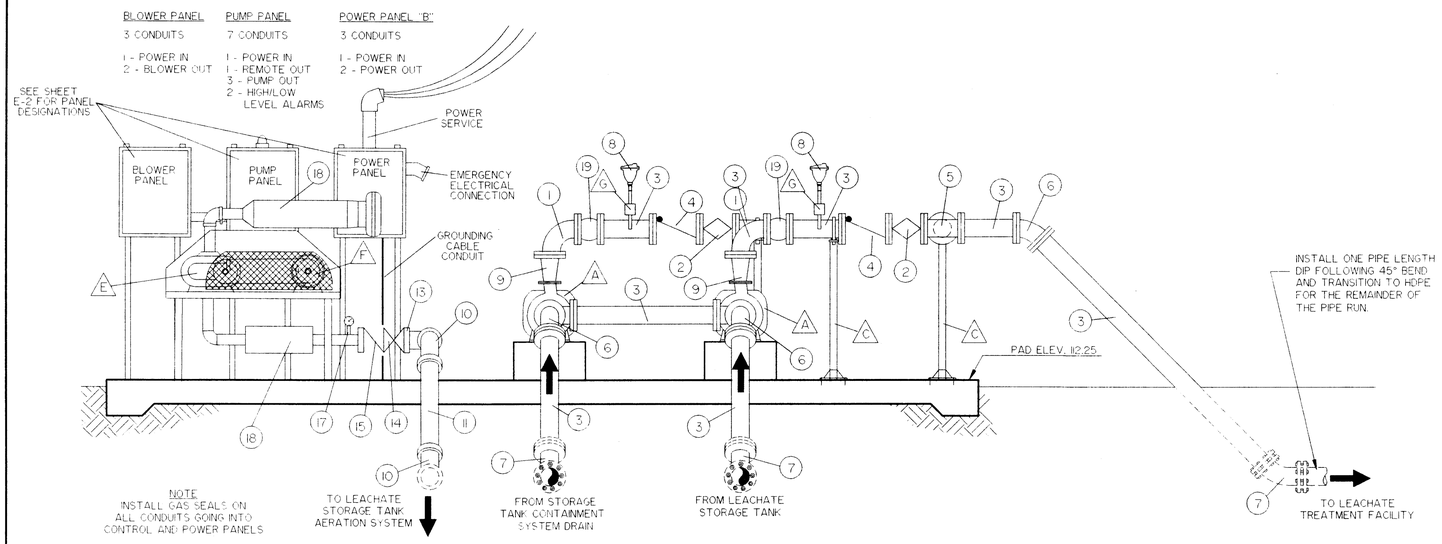

A / M-3 **ELEVATION**
1/2" = 1'-0"

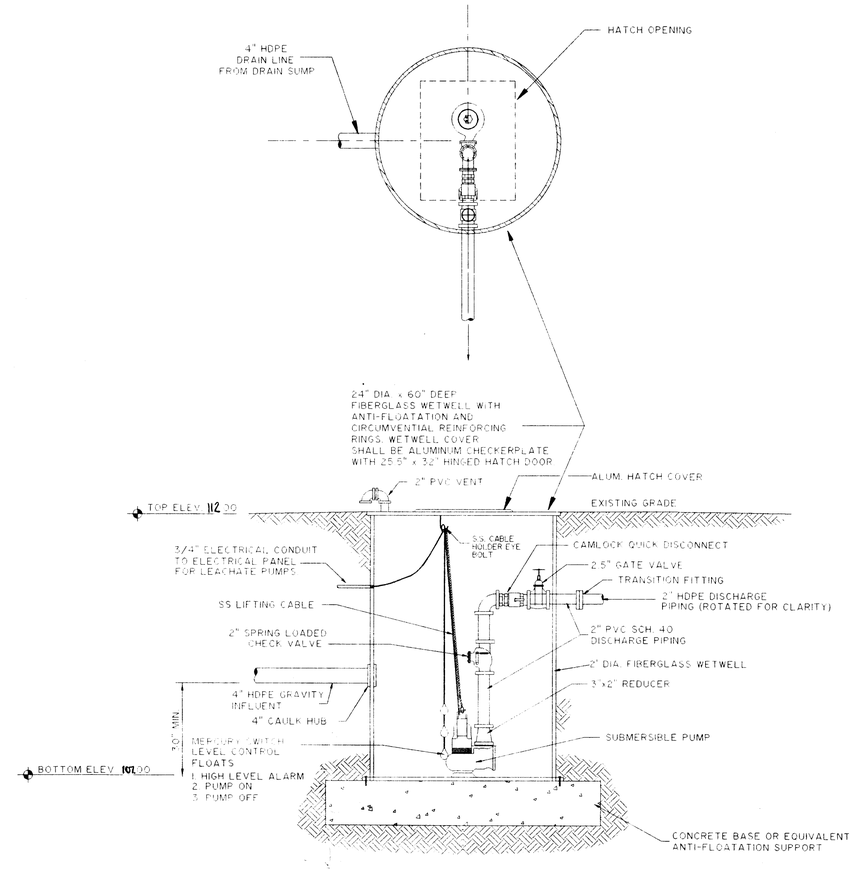

TRUCK LOADING DRAIN PUMP STATION DETAILS

N.T.S.

PIPING SCHEDULE

1. 6" DIA. 90° FE BEND
2. 6" DIA. FE PLUG VALVE
3. 6" DIA. DIP FE SPOOL PIECE
4. 6" DIA. FE SLANTING DISC CHECK VALVE
5. 6" x 6" x 6" FE TEE
6. 6" DIA. FE 45° BEND
7. 6" DIA. MJ 45° BEND
8. AIR RELEASE ASSEMBLY
9. 6" X 4" FE CONC. REDUCER
10. 6" DIA. GS 45° BEND
11. 6" DIA. GS AIR PIPING
12. 6" G.S. 90° BEND
13. 6" G.S. TEE
14. 6" ISOLATION VALVE
15. 6" AIR CHECK VALVE
16. 6" PRESSURE RELEASE VALVE
17. PRESSURE GAUGE
18. SILENCER
19. 6" VIBRATION ISOLATION FITTING

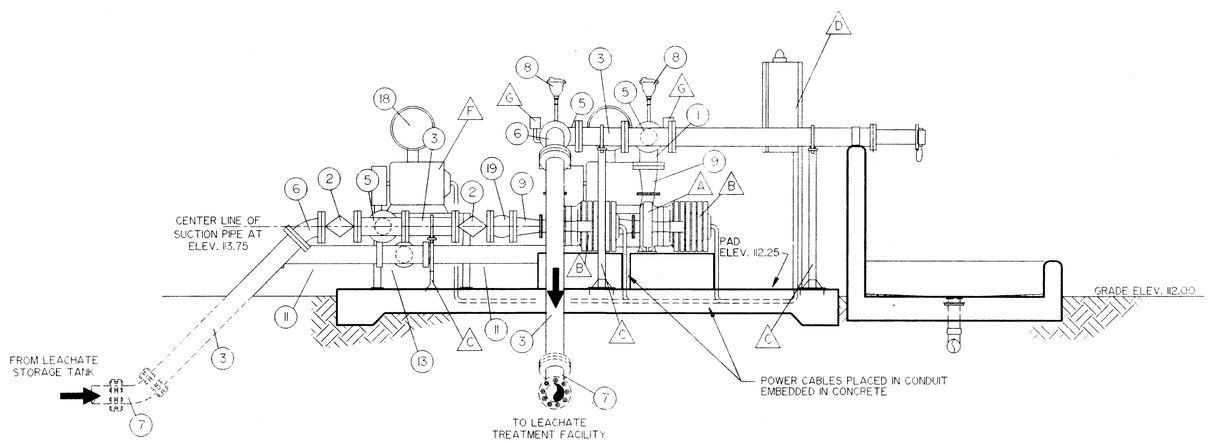

B / M-3 **ELEVATION**
1/2" = 1'-0"

EQUIPMENT SCHEDULE

- A — HORIZONTAL CENTRIFUGAL PUMP, CLOSE-COUPLED, 4" INTAKE X 4" DISCHARGE, 350 GPM @ 42' TDH RATING, 3" SOLIDS HANDLING MIN.
- B — 7.5 H.P. ELECTRIC MOTOR
- C — STEEL PIPE STANCHION, W/SADDLE AND U-BOLT.
- D — CONTROL PANEL (NEMA 4X) (SEE ELECTRICAL PLANS & SPECS.)
- E — POSITIVE DISPLACEMENT BLOWER
- F — 20 HP ELECTRIC MOTOR
- G — PRESSURE SWITCH

CH2M HILL
P. O. BOX 21647
TAMPA, FLORIDA 33622-1647

PROJECT RECORD

DESIGNED KC
DRAWN KC
CHECKED G.J.M.
DATE APRIL 7, 1995

Berryman & Henigar
BSI Consultants, Inc. ▪ Henigar & Ray, Inc.
640 EAST HIGHWAY 44 • CRYSTAL RIVER, FLORIDA 34429-4399 • (904) 795-6551

NO.	DATE	REVISION	APP'D. BY
	3/1/95	GENERAL REVISION	A.D.M.

CITRUS COUNTY CENTRAL LANDFILL
LEACHATE STORAGE TANK

LEACHATE PUMPING STATION DETAILS

GEORGE J. McDONALD, P.E.
REGISTERED ENGINEER NO. 44740
STATE OF FLORIDA
DATE

JOB NO. 45085
FILE NO. 5A-345
SEC 1
TWP 19S RGE 18E
SHT M-4

PROJECT RECORD

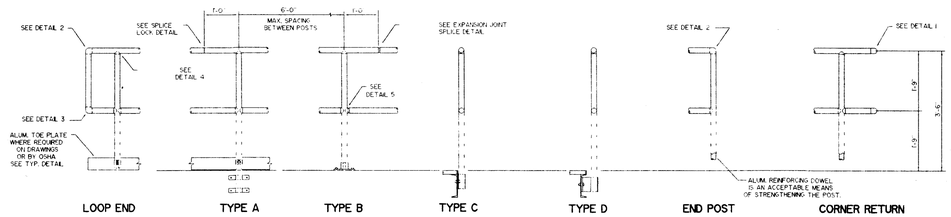

TYPICAL HANDRAIL

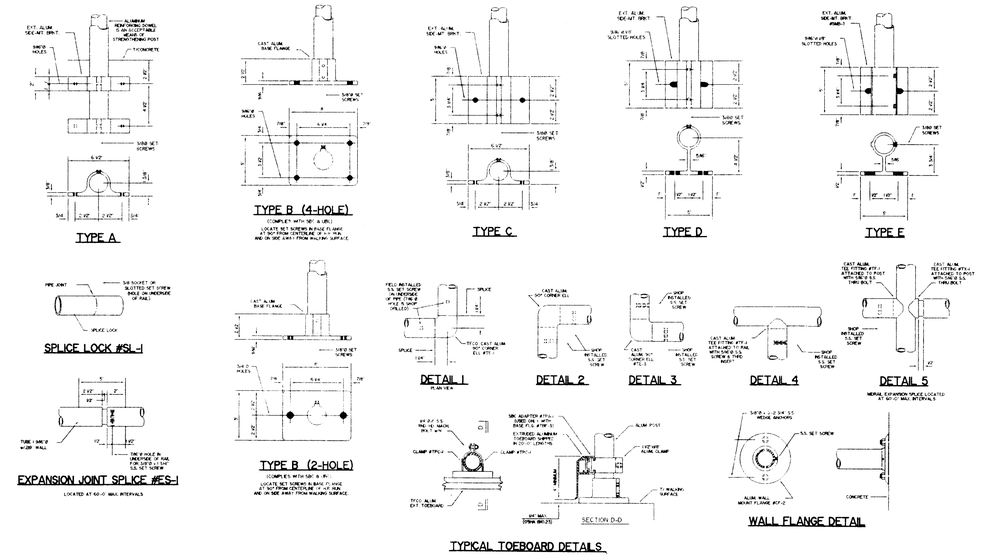

TYPICAL TOEBOARD DETAILS

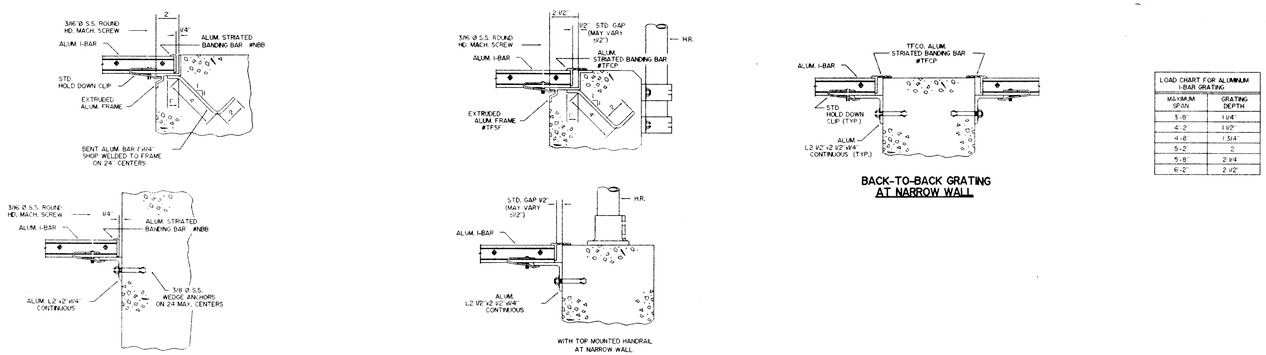

LOAD CHART FOR ALUMINUM I-BAR GRATING	
MAXIMUM SPAN	GRATING DEPTH
3'-8"	1 1/4"
4'-2"	1 1/2"
4'-8"	1 3/4"
5'-2"	2"
5'-8"	2 1/4"
6'-2"	2 1/2"

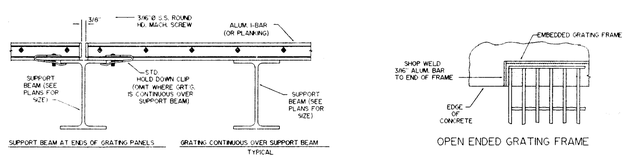

GRATING DETAILS

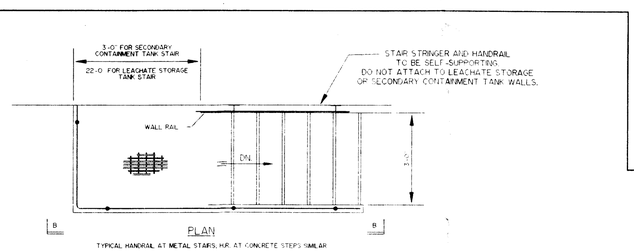

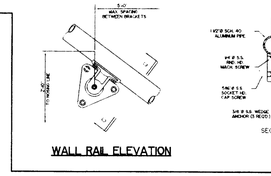

WALL RAIL ELEVATION

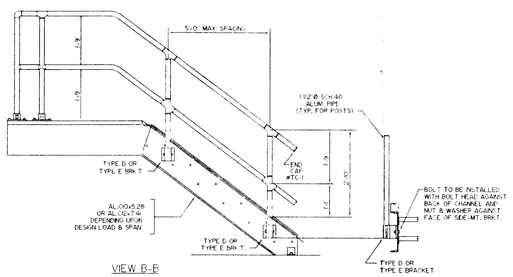

STAIRWAY DETAILS

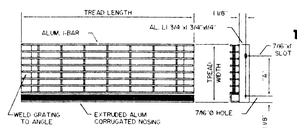

ALUMINUM I-BAR TREADS		
TREAD WIDTH	NUMBER OF BEARING BARS	DIM. A
6 5/8"	5	2 1/2"
7 15/16"	6	4 1/2"
9"	7	4 1/2"
10 3/16"	8	7"
11 5/8"	9	7"
12 3/16"	10	7"

ALUMINUM I-BAR TREADS	
BEARING BAR SIZE	MAX. TREAD LENGTH*
1 1/4"	2'-8"
1 1/2"	3'-6"
1 3/4"	4'-7"
2"	5'-8"

* BASED ON 400 LB. CONCENTRATED LOAD APPLIED ON THE CENTERLINE OF THE SPAN AND DISTRIBUTED OVER THE NOSING & 4 BEARING BARS.

SAME TABLE FOR PLANKING TREADS WHEN SPECIFIED ON DRAWINGS

STAIR TREAD

CH2M HILL
P. O. BOX 21647
TAMPA, FLORIDA 33622-1647

DESIGNED J.J.S.
DRAWN J.J.S.
CHECKED G.J.M.
DATE JAN.1995

Berryman & Henigar
BSI Consultants, Inc. ▪ Henigar & Ray, Inc.
640 EAST HIGHWAY 44 • CRYSTAL RIVER, FLORIDA 34429-4399 • (904) 795-6551

NO.	DATE	REVISION	APP'D. BY
	3/1/95	GENERAL REVISION	A.D.M.

CITRUS COUNTY CENTRAL LANDFILL
LEACHATE STORAGE TANK

MISCELLANEOUS MECH. DETAILS, STAIRS, HANDRAILS & GRATES

GEORGE J. McDONALD, P.E.
REGISTERED ENGINEER NO. 44740
STATE OF FLORIDA
DATE

JOB NO. 45085
FILE NO. 5A-345
SEC. 1
TWP 19S RGE 18E
SHT. M-5

PROJECT RECORD

PLAN VIEW
SCALE, 1/4" = 1'-0"

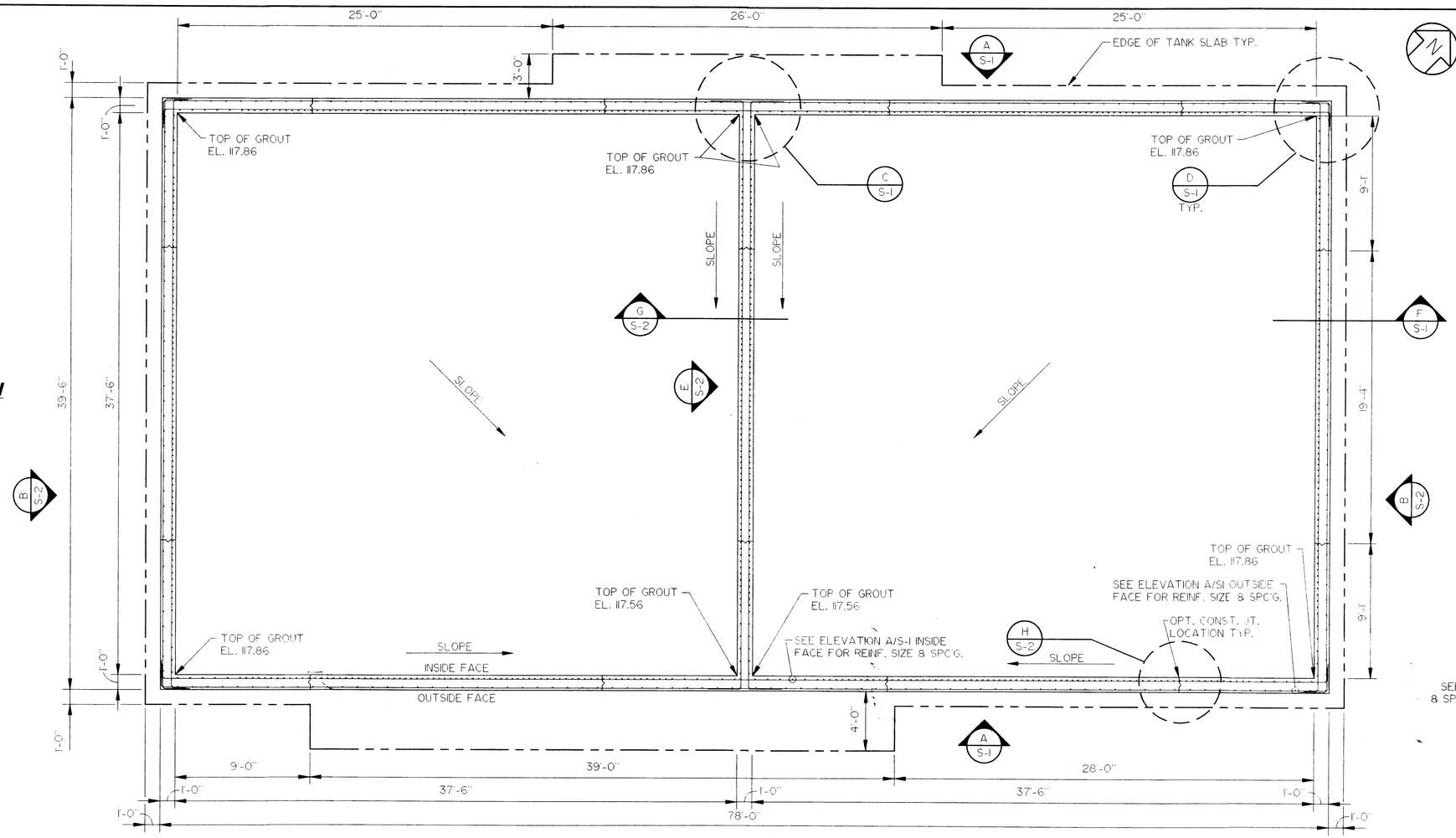

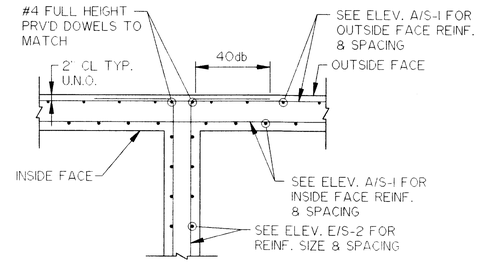

DETAIL (C / S-1)
SCALE, 1/2" = 1'-0"

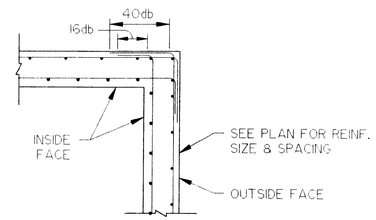

DETAIL (D / S-1)
SCALE, 1/2" = 1'-0"

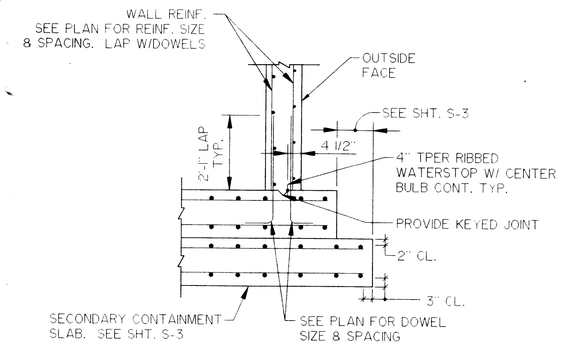

SECTION (F / S-1)
SCALE, 1/2" = 1'-0"

ELEVATION (A / S-1)
SCALE, 1/4" = 1'-0"

1. SEE DETAIL J/S-2 FOR REINF. REQUIREMENTS AT OPENINGS
2. SEE DRAWING G-2 FOR GENERAL NOTES

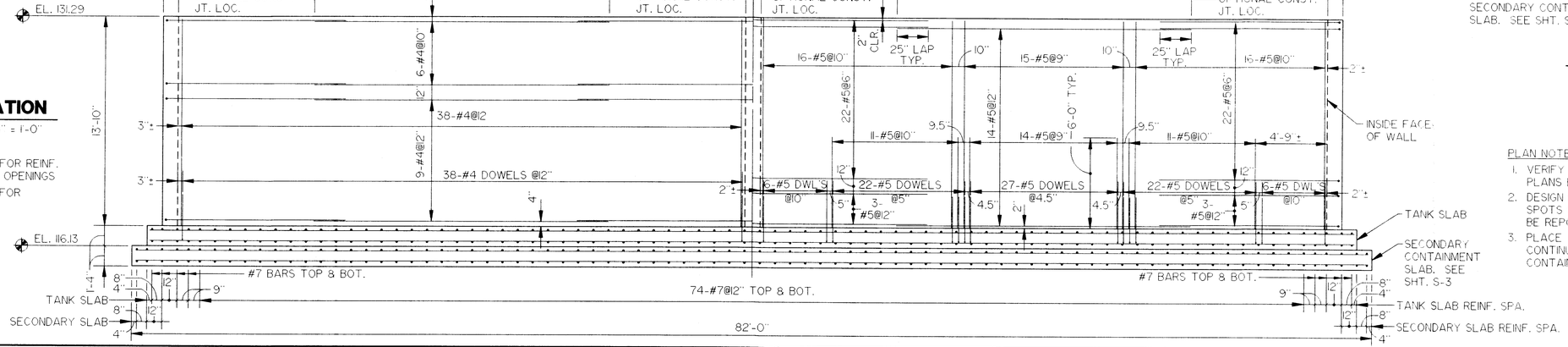

PLAN NOTES

1. VERIFY LOCATIONS OF WALLS, OPENINGS, ETC. WITH PLANS BEFORE PLACING FOUNDATIONS.
2. DESIGN SOIL BEARING PRESSURE 2000 PSF. ANY SOFT SPOTS OR VARIATIONS IN SUBSURFACE CONDITIONS SHALL BE REPORTED IMMEDIATELY TO THE ENGINEER.
3. PLACE TWO LAYERS OF 6 MIL POLYETHYLENE SHEETING CONTINUOUS BETWEEN TANK BASE SLAB AND SECONDARY CONTAINMENT SLAB.

CH2M HILL
P. O. BOX 21647
TAMPA, FLORIDA 33622-1647

SCALE	A.S.
DRAWN	K.A.C.
CHECKED	D.A.B.
DATE	4-7-95

Berryman & Henigar
BSI Consultants, Inc. ▪ Henigar & Ray, Inc.
640 EAST HIGHWAY 44 • CRYSTAL RIVER, FLORIDA 34429-4399 • (904) 795-6551

NO.	DATE	REVISION	APP'D. BY
1	10-17-95	ADD SECONDARY SLAB BELOW TANK	D.A.B.

CITRUS COUNTY CENTRAL LANDFILL LEACHATE STORAGE TANK

STRUCTURAL PLAN & DETAILS

DAVID BRITTAIN, P.E.
REGISTERED ENGINEER NO. 44947
STATE OF FLORIDA
DATE

JOB NO. 45085
FILE NO.
SEC.
TWP. RGE.
SHT. S-1

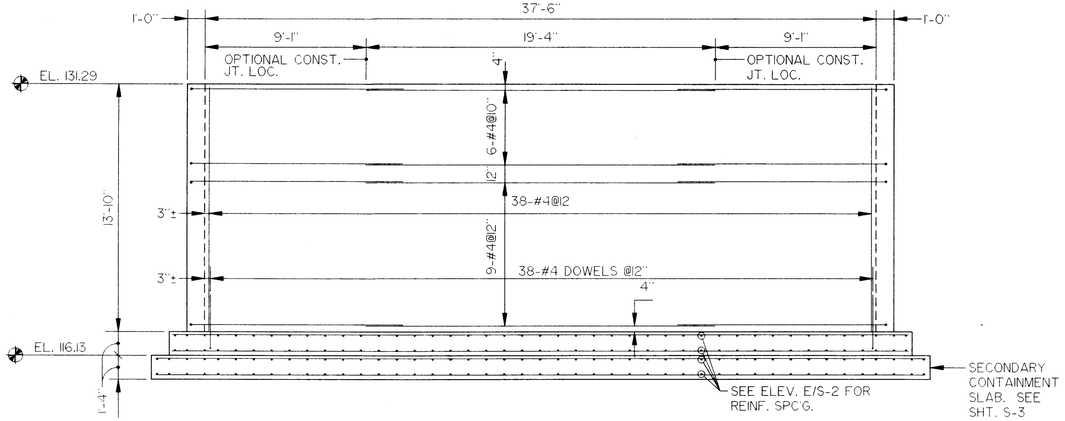

B / S-2 **ELEVATION (OUTSIDE FACE)**

SCALE, 1/4" = 1'-0"

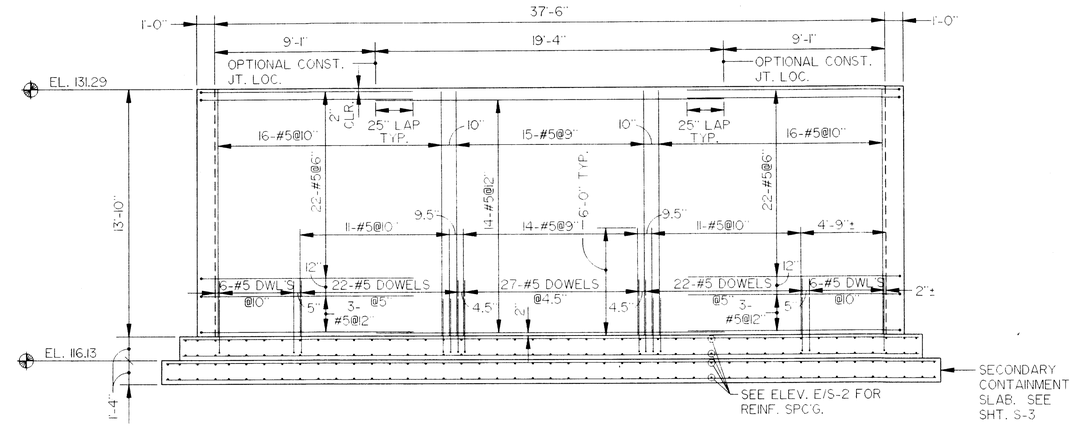

B / S-2 **ELEVATION (INSIDE FACE)**

SCALE, 1/4" = 1'-0"

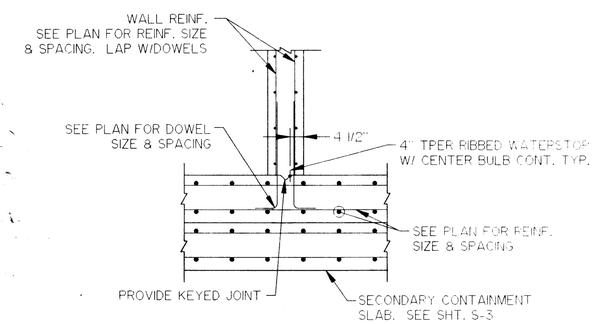

SECTION G / S-2

SCALE, 1/2" = 1'-0"

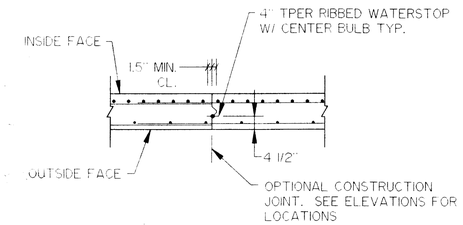

DETAIL H / S-2

SCALE, 1/2" = 1'-0"

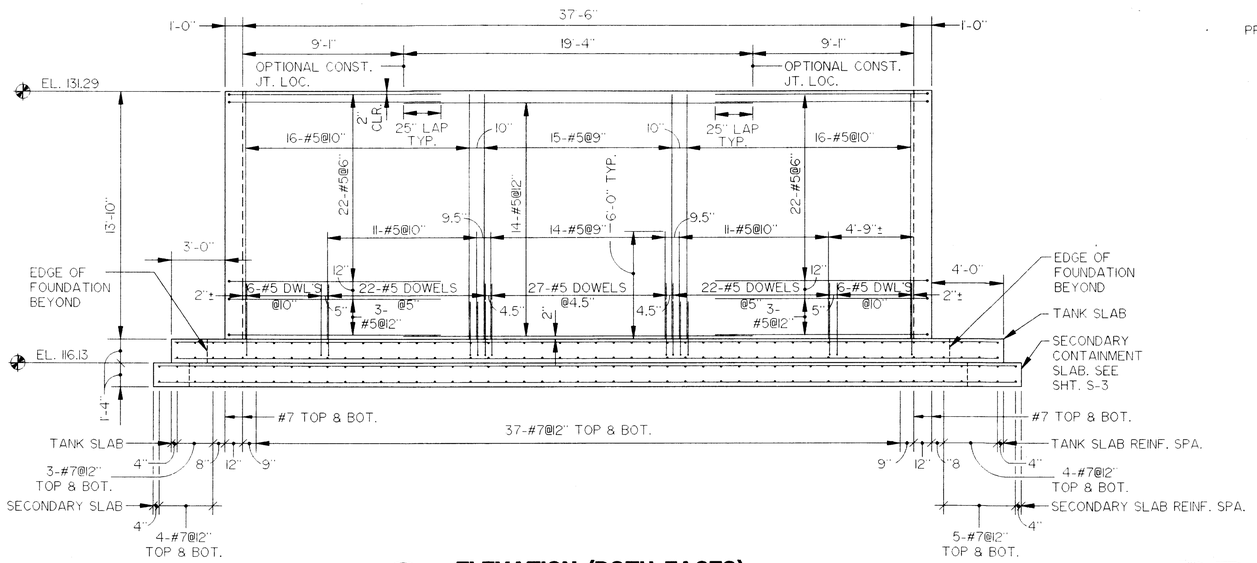

E / S-2 **ELEVATION (BOTH FACES)**

SCALE, 1/4" = 1'-0"

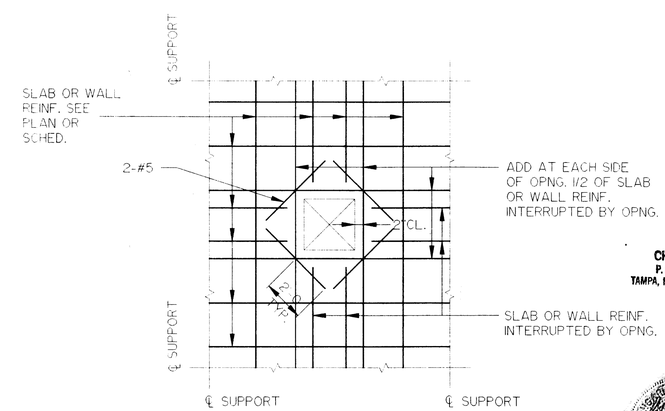

DETAIL J / S-2

SCALE, N.T.S.

PROJECT RECORD

CH2M HILL
P. O. BOX 21647
TAMPA, FLORIDA 33622-1647

SCALE A.S.	**Berryman & Henigar**	I	10-17-95	ADD SECONDARY SLAB BELOW TANK	D.A.B.	**CITRUS COUNTY CENTRAL LANDFILL LEACHATE STORAGE TANK**	**STRUCTURAL SECTIONS AND DETAILS**
DRAWN K.A.C.	BSI Consultants, Inc. ▪ Henigar & Ray, Inc.						DAVID BRITTAIN, P.E. REGISTERED ENGINEER NO. 44947 STATE OF FLORIDA DATE
CHECKED D.A.B.	640 EAST HIGHWAY 44 • CRYSTAL RIVER, FLORIDA 34429-4399 • (904) 795-6551						JOB NO. 45085 FILE NO. 5A-345 SEC 1 TWP 19S RGE 18E
DATE 4-7-95		NO	DATE	REVISION	APP'D. BY		SHT S-2

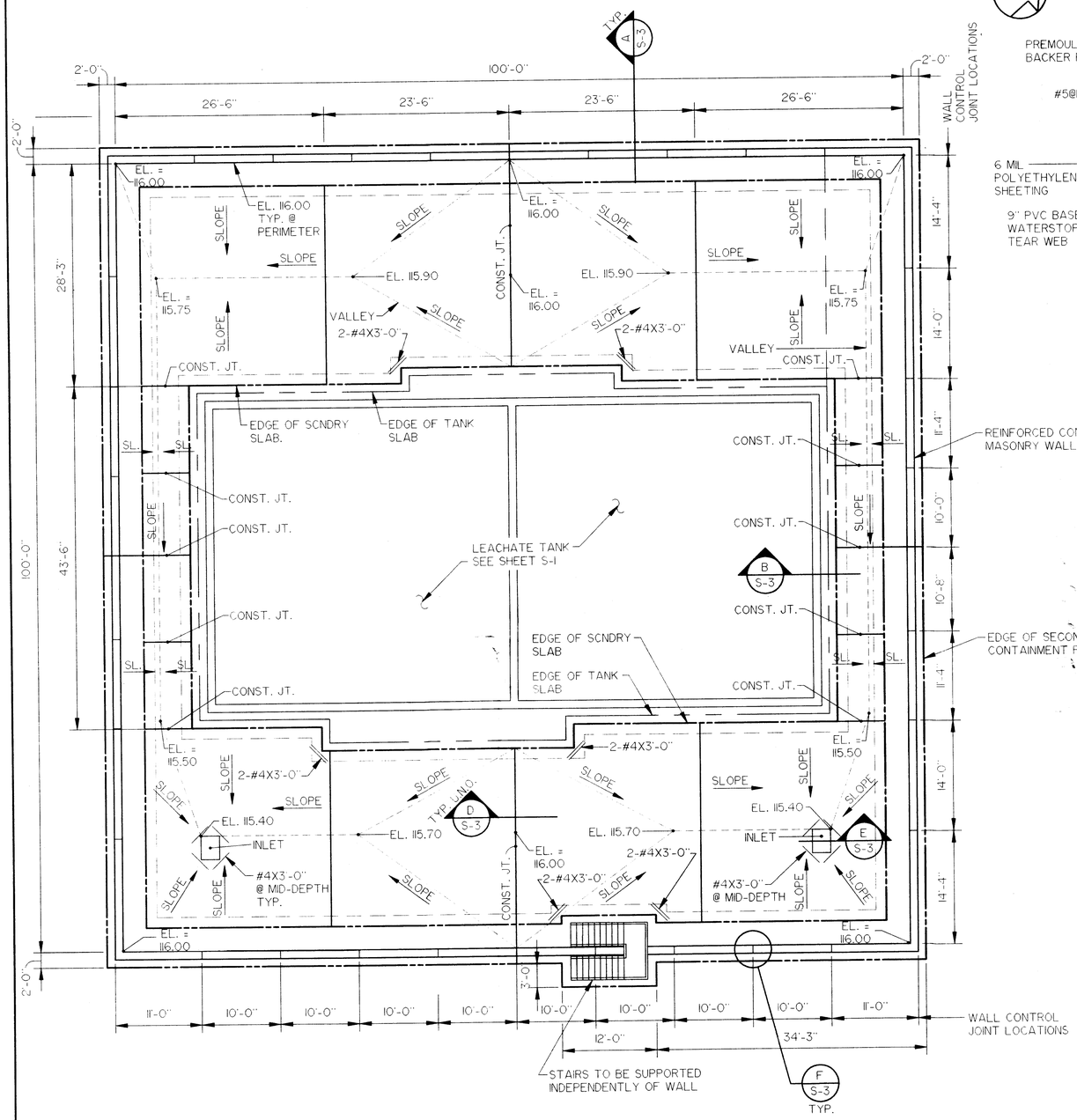

PLAN VIEW
SCALE, 1/8" = 1'-0"

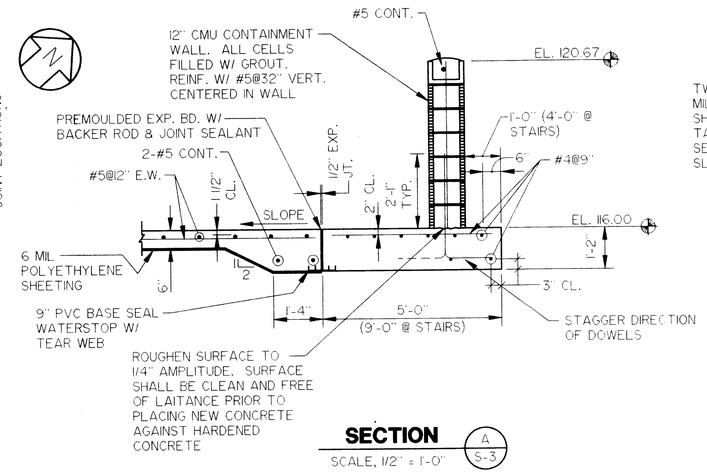

SECTION A S-3
SCALE, 1/2" = 1'-0"

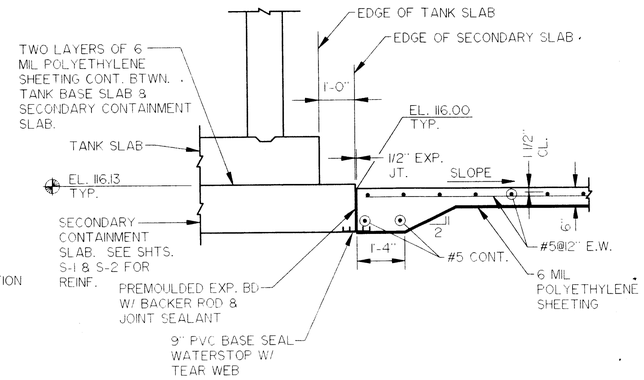

SECTION B S-3
SCALE, 1/2" = 1'-0"

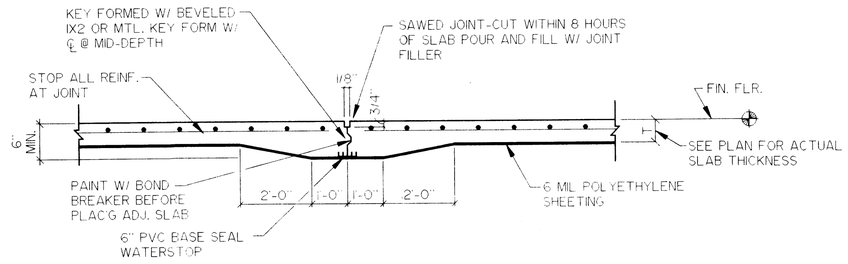

SECTION D S-3
TYP. KEYED CONST. JOINT
N.T.S.

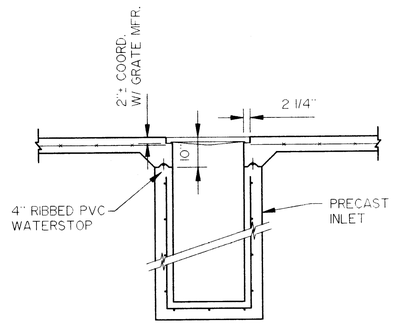

SECTION E S-3
SCALE, 1/2" = 1'-0"

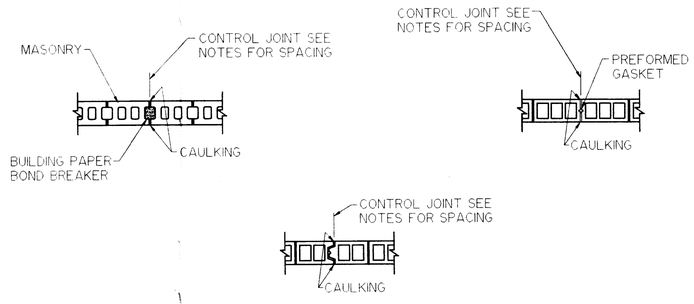

DETAILS F S-3
TYP. CONTROL JOINTS
N.T.S.

NOTE: STOP ALL REINF. ACROSS CONTROL JOINTS, INCLUDING BOND BEAM REINF.

CH2M HILL
P. O. BOX 21647
TAMPA, FLORIDA 33622-1647

PROJECT RECORD

DESIGNED A.S.
DRAWN K.A.C.
CHECKED D.A.B.
DATE 4-7-95

Berryman & Henigar
BSI Consultants, Inc. ▪ Henigar & Ray, Inc.
640 EAST HIGHWAY 44 • CRYSTAL RIVER, FLORIDA 34429-4399 • (904) 795-6551

NO.	DATE	REVISION	APP'D. BY
1	10-17-95	ADD SECONDARY SLAB BELOW TANK	D.A.B.

CITRUS COUNTY CENTRAL LANDFILL
LEACHATE STORAGE TANK

SECONDARY CONTAINMENT PLAN

DAVID BRITTAIN, P.E.
REGISTERED ENGINEER NO. 44947
STATE OF FLORIDA
DATE

JOB NO. 45085
FILE NO. 5A-345
SEC 1
TWP 19S RGE 18E
SHT S-3

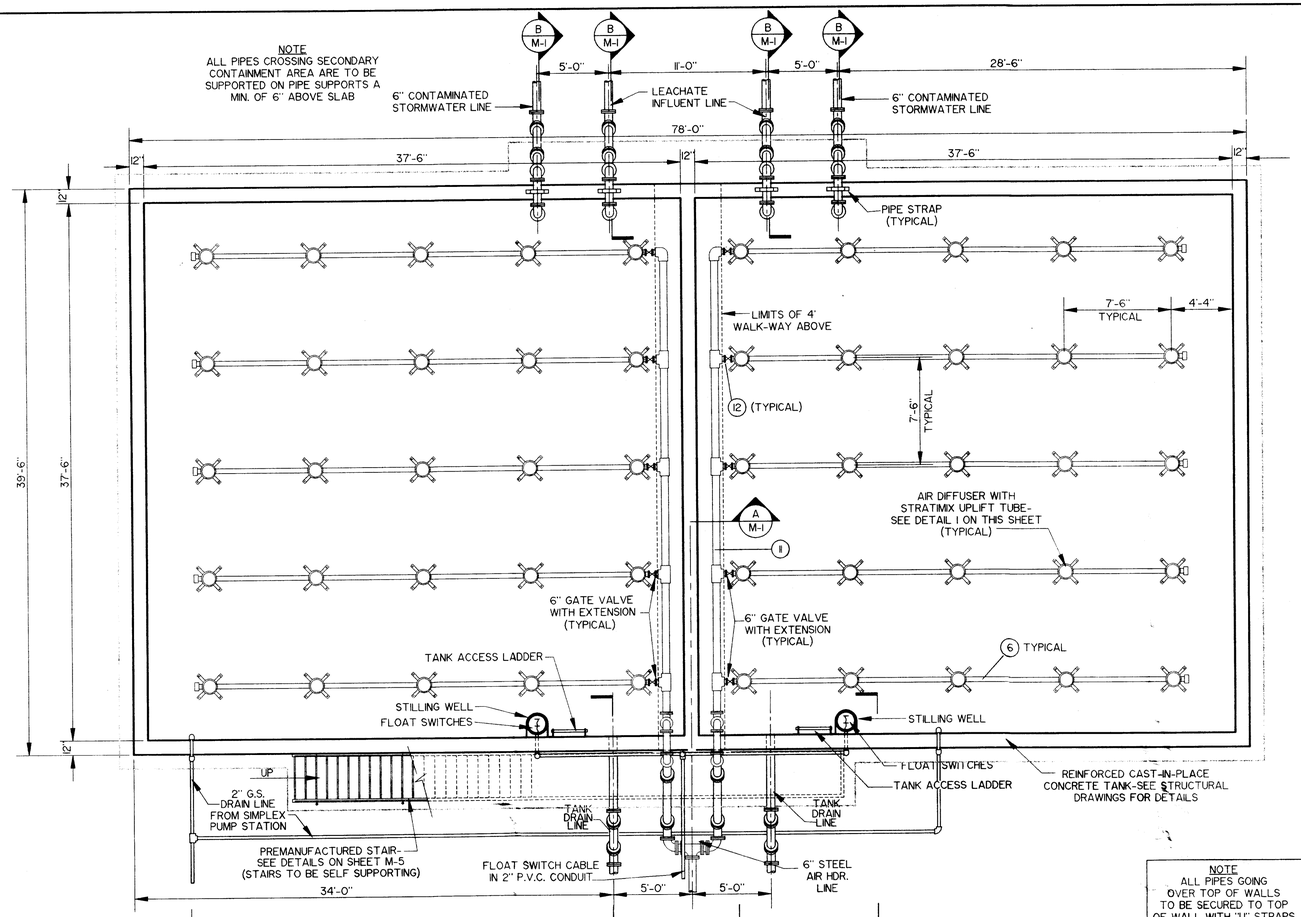

MECHANICAL PLAN

SCALE: 1" = 5'

NOTE
ALL PIPES GOING OVER TOP OF WALLS TO BE SECURED TO TOP OF WALL WITH "U" STRAPS

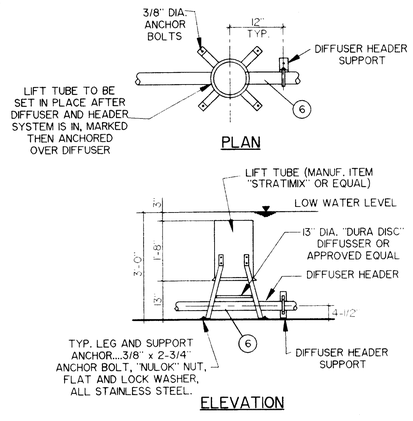

DETAIL

TYPICAL STRATIMIX
SCALE: 1" = 2'

PIPING SCHEDULE

1	6" D.I.P.
2	6" F.E. 90° BEND
3	6" D.I.P./P.V.C. FLANGE ADAPTER
4	6" P.V.C. C-900 DR18
5	6" M.J. 90° BEND
6	3" STAINLESS STEEL PIPING
7	S.S. SUPPORT BRACKETS GRINNEL OR EQUAL
8	6" D.I.P. WALL PIPE
9	6" PLUG VALVE
10	6" F.E. 90° BEND
11	6" STAINLESS STEEL PIPING
12	3" DOUBLE DISC NRS GATE VALVE (MJ X MJ ENDS)
13	6" F.E. 45° BEND
14	6" EXPANSION JOINT
15	2" EXPANSION JOINT

NOTE
ALL PIPES CROSSING SECONDARY CONTAINMENT AREA ARE TO BE SUPPORTED ON PIPE SUPPORTS A MIN. OF 6" ABOVE SLAB

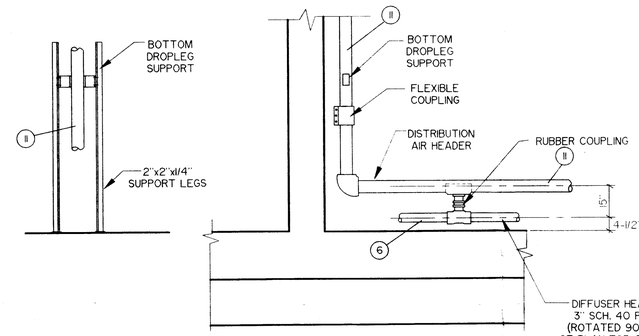

DETAIL

AIR HEADER
SCALE: 1" = 2'

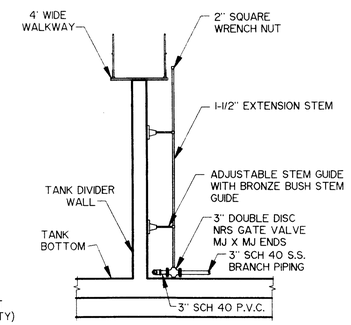

SECTION

SCALE: 1" = 5'

PROJECT RECORD

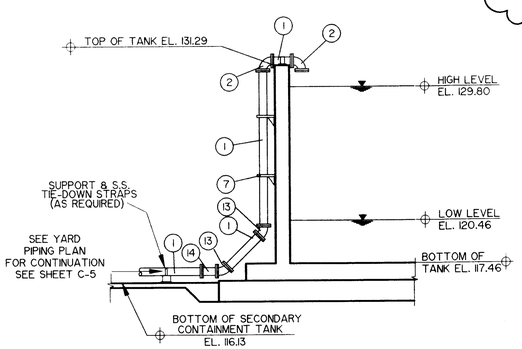

SECTION

SCALE: 1" = 5'

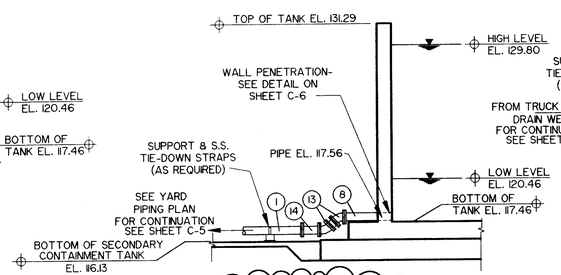

SECTION

SCALE: 1" = 5'

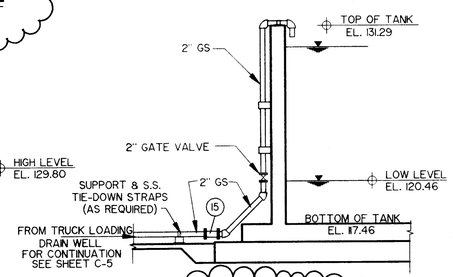

SECTION

SCALE: 1" = 5'

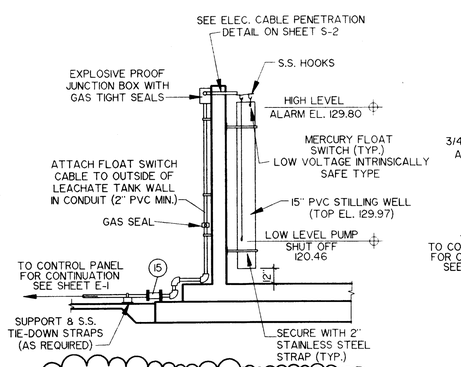

FLOAT SWITCH DETAIL

SCALE: 1" = 5'

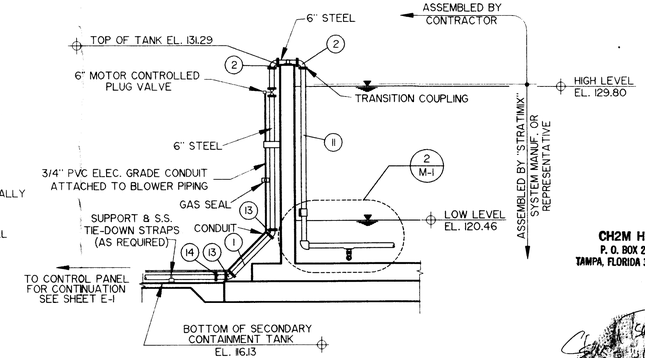

SECTION

SCALE: 1" = 5'

CH2M HILL
P. O. BOX 21967
TAMPA, FLORIDA 33622-1647

DESIGNED G.J.M.			
DRAWN J.I.S.			
CHECKED G.J.M.			
DATE APRIL 7, 1995			

Berryman & Henigar
BSI Consultants, Inc. ▪ Henigar & Ray, Inc.
640 EAST HIGHWAY 44 • CRYSTAL RIVER, FLORIDA 34429-4399 • (904) 795-6551

NO.	DATE	REVISION	APP'D. BY
2	10/17/95	GENERAL REVISION	A.D.M.
1	3/1/95	GENERAL REVISION	A.D.M.

CITRUS COUNTY CENTRAL LANDFILL
LEACHATE STORAGE TANK

LEACHATE STORAGE TANK
MECHANICAL PLAN and DETAILS

GEORGE J. McDONALD, P.E.
REGISTERED ENGINEER NO. 44740
STATE OF FLORIDA
DATE

JOB NO. 45085
FILE NO. 5A-345
SEC 1
TWP 19S RGE 18E
SHT M-1

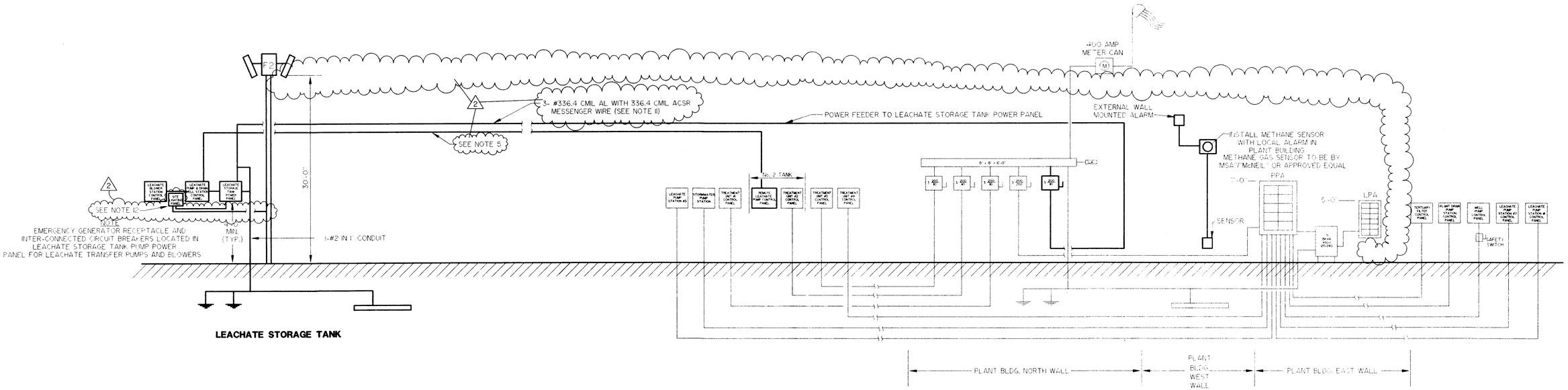

ELECTRICAL RISER DIAGRAM

NOT TO SCALE

NOTE: BOLD DETAIL INDICATES NEW INSTALLATION AND EQUIPMENT

NOTES:

1. INSTALL 10 MINUTE TIME DELAY ON BLOWERS TO ALLOW FOR MOTOR SPIN DOWN BEFORE RESTART.
2. INSTALL LIGHTNING AND SURGE PROTECTION IN ALL POWER PANELS.
3. ALL POWER AND CONTROL PANELS ARE TO BE NEMA RATED 4X STAINLESS STEEL OR FIBER GLASS.
4. LEACHATE STORAGE TANK POWER PANEL AND PLANT BUILDING FEEDER SERVICE DROPS ARE TO BE WATERTIGHT AND TO BE FITTED WITH DRIP LOOPS.
5. ELETRICAL CONDUCTORS TO BE TYPE TC COPPER CABLE RATED AT 600 VOLTS WITH INSULATION RATED AT 75 DEG. C. SUITABLE FOR WET LOCATIONS AND RESISTANT TO SUNLIGHT. THE POWER FEEDER CABLE IS TO BE A SINGLE MULTI-CONDUTOR CABLE WITH A PVC JACKET.
6. ELECTRICAL CONDUCTORS TO BE "THWN" OR EQUAL PER N.E.C., OR AS SHOWN.
7. UTILITY POLE GUY WIRE ANCHORING PER FLORIDA POWER CORP. UTILITY SERVICE SPECIFICATIONS.
8. **CONTRACTOR TO BE AWARE OF METHANE GAS HAZARD DURING CONSTRUCTION AND TAKE SUITABLE PRECAUTIONS.**
9. **ALL ELECTRICAL EQUIPMENT TO BE EXPLOSION PROOF AND UL RATED FOR HAZARDOUS LOCATIONS.**
10. **CONTRACTOR TO VERIFY ALL POWER AND FEEDER CONDUCTOR SIZING, THERMAL OVERLOADS, BRANCH CIRCUIT SHORT CIRCUIT AND GROUND-FAULT PROTECTION DEVICES AND SERVICE CONDUCTORS SIZING FROM THE PLANT BUILDING TO THE LEACHATE STORAGE TANK POWER PANEL.**
11. **POWER FEEDER WIRE IS TO BE 3-#336.4 CMIL ALUMINUM, WITH A 336.4 CMIL ACSR MESSENGER WIRE AND TYPE VULCANIZED INTERLINKED POLYETHYLENE (VIP) INSULATION TYPE QUADRUPLEX SERVICE DROP WIRE (CODE NAME "BRONCO").**
12. **SITE LIGHTING PANEL BOX IS TO BE SUPPLIED WITH A 480V/120V , 2KVA TRANSFORMER, EXTERNAL PHOTOCELL AND HOA SWITCH.**

LIGHTING FIXTURE SCHEDULE

TYPE	MANUFACTURE & CAT. NO.	LAMP	VOLTAGE	MOUNTING	REMARKS
F2	HUBBELL MVK-COS-168 OR EQUAL	(3) 400 HPS	120	HUBBELL T7B-3 POLE MOUNT	MOUNT ON POWER POLE AT LEACHATE STORAGE TANK PUMP STATION

FEEDER SCHEDULE

CIRCUIT #	MOTOR #	DESCRIPTION	HORSEPOWER	FEEDER DATA: PHASE	GROUND	CONDUIT	VOLTS	CONTROL TYPE	NOTES
1	M1	LEACHATE STOR. TK. PUMP #1	7.5	3#8	#8	1	480	MANUAL	CONTROL PANEL
2	M2	LEACHATE STOR. TK. PUMP #2	7.5	3#8	#8	1	480	MANUAL	CONTROL PANEL
3	M3	LEACHATE STOR. TK. BLOWER #1	20.0	3#4	#8	1 1/2	480	TIMER	CONTROL PANEL
4	M4	LEACHATE STOR. TK. BLOWER #2	20.0	3#4	#8	1 1/2	480	TIMER	CONTROL PANEL
5	M5	TRANSFER STATION DRAINWELL PUMP	2.0	3#6	#12	1	480	FLOAT	CONTROL PANEL
	F2	SITE LIGHTING	1	2#10	#12	1/2	120	SWITCH	PHOTO-CELL CONTROL

NOTES:

1. ALL ELECTRICAL EQUIPMENT IS TO BE EXPLOSION-PROOF AND UL RATED FOR HAZARDOUS LOCATIONS.
2. ALL ELECTRICAL CONDUITS ENTERING SLABS ARE TO BE FITTED WITH GAS SEALS BELOW PANELS.
3. MAIN POWER FEEDER SERVICE IS TO BE MOUNTED TO POWER PANEL SUPPORT. SEE DETAIL ON SHEET E-2.
4. INSTALL SOLID STATE "SOFT STARTERS" IN THE CONTROL PANELS FOR THE 20HP BLOWER MOTORS.

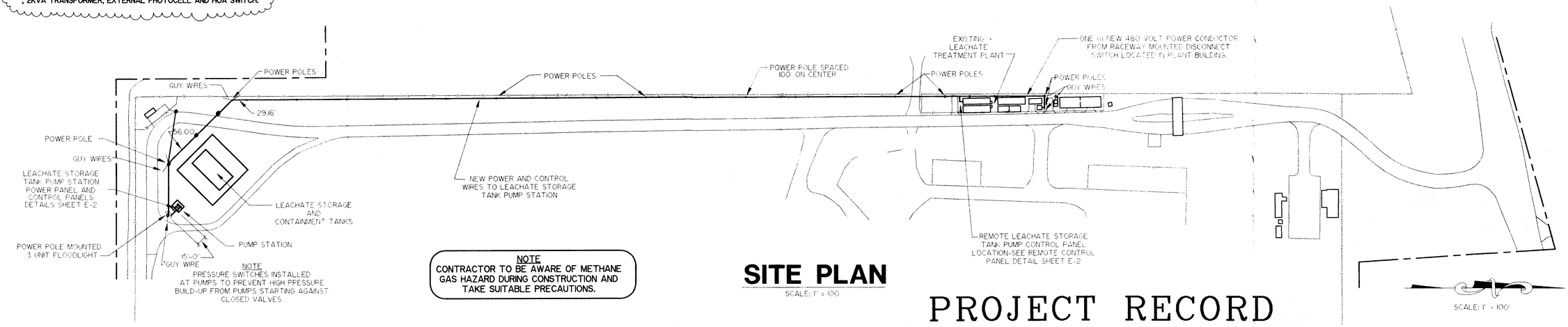

NOTE
CONTRACTOR TO BE AWARE OF METHANE GAS HAZARD DURING CONSTRUCTION AND TAKE SUITABLE PRECAUTIONS.

SITE PLAN

SCALE: 1" = 100'

PROJECT RECORD

CH2M HILL
P. O. BOX 21647
TAMPA, FLORIDA 33622-1647

DESIGNED A.D.M.
DRAWN J.L.S.
CHECKED G.J.M.
DATE APRIL 7, 1995

Berryman & Henigar
BSI Consultants, Inc. ▪ Henigar & Ray, Inc.
640 EAST HIGHWAY 44 • CRYSTAL RIVER, FLORIDA 34429-4399 • (904) 795-6551

NO.	DATE	REVISION	APP'D. BY
2	8/22/95	GENERAL REVISION	A.D.M.
1	3/31/95	GENERAL REVISION	A.D.M.

CITRUS COUNTY CENTRAL LANDFILL
LEACHATE STORAGE TANK

SITE ELECTRICAL AND RISER DIAGRAM

GEORGE J. McDONALD, P.E.
REGISTERED ENGINEER NO. 44740
STATE OF FLORIDA
DATE

JOB NO. 45085
FILE NO. 5A-345
SEC. 1
TWP. 19S RGE. 18E
SHT. E-1

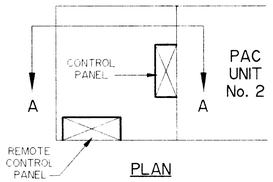

PLAN

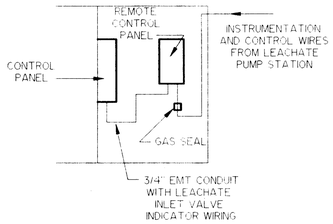

SECTION A-A

NOTE
LIGHTS: RUN-GREEN
STOP-YELLOW
LEACHATE TANK ALARMS-RED
PUMP SHUT-OFF ALARMS-RED

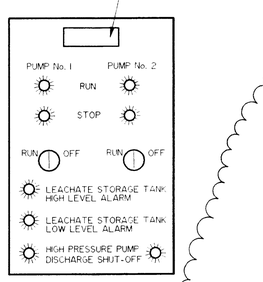

ELEVATION

REMOTE CONTROL PANEL DETAILS

NOT TO SCALE

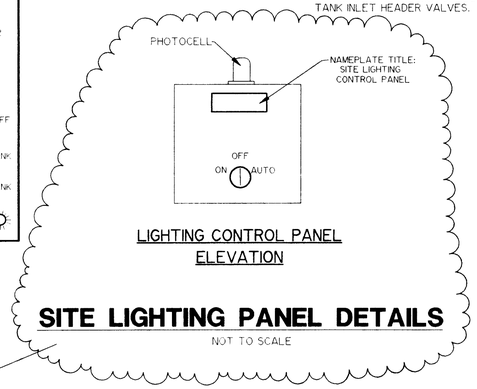

LIGHTING CONTROL PANEL ELEVATION

SITE LIGHTING PANEL DETAILS

NOT TO SCALE

NOTE
LIGHTS: RUN-GREEN
STOP-YELLOW
LEACHATE TANK ALARMS-RED

NOTE
BLOWER STARTERS TO BE INTERCONNECTED WITH THE MOTORIZED TANK INLET HEADER VALVES OPEN INDICATOR TO PREVENT BLOWER STARTING AGAINST A CLOSED VALVE.

NOTE
BLOWER PANEL TO BE SUPPLIED WITH ELECTRONIC PROGRAMMABLE RUN TIMERS FOR BLOWERS AND MOTORIZED TANK INLET HEADER VALVES.

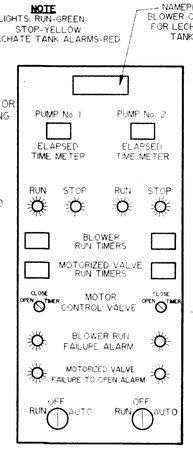

BLOWER PANEL ELEVATION

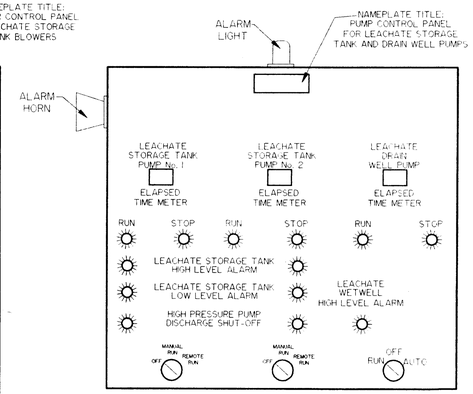

PUMP CONTROL PANEL ELEVATION

LEACHATE STORAGE TANK PANEL DETAILS

NOT TO SCALE

NOTE
ALARMS ACTIVATED BY HIGH AND LOW LEVEL FLOATS IN LEACHATE STORAGE TANKS

NOTE
1. LEACHATE PUMP STARTERS TO BE INTERCONNECTED WITH THE ZIMPRO TREATMENT PLANT MOTORIZED TANK INLET VALVES OPEN INDICATOR TO PREVENT PUMP FROM STARTING AGAINST A CLOSED VALVE.
2. HIGH PRESSURE PUMP DISCHARGE SHUT-OFF PRESSURES ARE TO BE FIELD SET AT AN INITIAL SETTING OF 50 P.S.I. AND ADJUSTED TO PROVIDE AN ADEQUATE PRESSURE AT THE ZIMPRO PLANT OF 15 P.S.I.

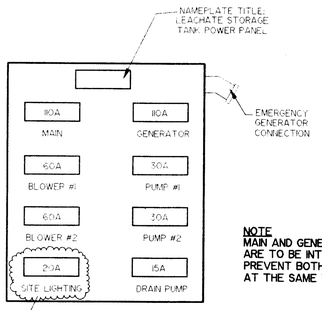

POWER PANEL ELEVATION

NOTE
MAIN AND GENERATOR DISCONNECTS ARE TO BE INTERCONNECTED TO PREVENT BOTH FROM BEING ENERGIZED AT THE SAME TIME

GENERAL NOTES

1. ALL PANELS TO BE FITTED WITH LIGHTNING ARRESTORS, LOSS OF PHASE PROTECTION MONITORS, AND TRANSIENT VOLTAGE MONITORS.
2. ALL PANEL ENTRY CONDUITS ARE TO BE FITTED WITH GAS SEALS.
3. ALL PANELS ARE TO BE NEMA 4X RATED STAINLESS STEEL OR FIBERGLASS, UNLESS OTHERWISE NOTED.
4. **CONTRACTOR TO BE AWARE OF METHANE GAS HAZARD DURING CONSTRUCTION AND TAKE SUITABLE PRECAUTIONS.**
5. **ALL ELECTRICAL EQUIPMENT TO BE EXPLOSION PROOF AND UL RATED**

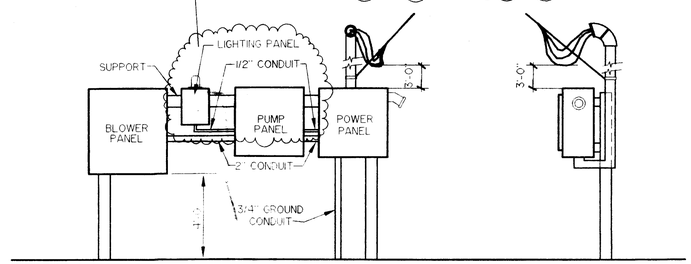

MAIN POWER FEEDER SERVICE DETAIL

NOT TO SCALE

NOTE
CONTRACTOR TO BE AWARE OF METHANE GAS HAZARD DURING CONSTRUCTION AND TAKE SUITABLE PRECAUTIONS.

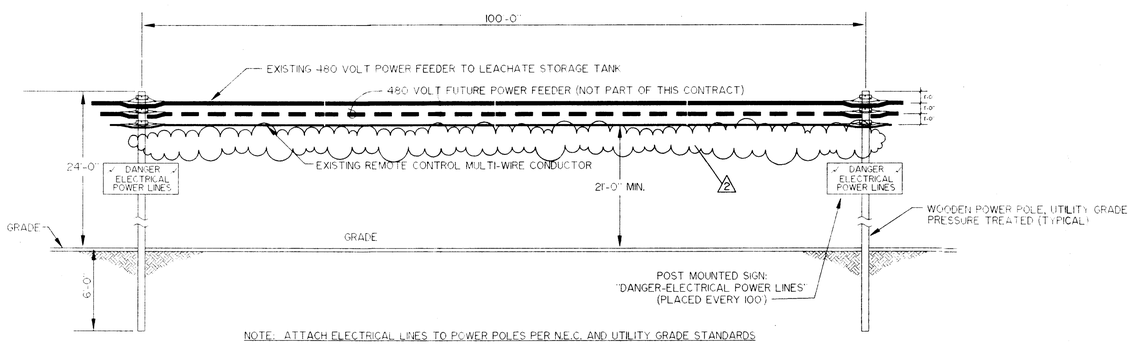

NOTE: ATTACH ELECTRICAL LINES TO POWER POLES PER N.E.C. AND UTILITY GRADE STANDARDS

ELEVATION

POWER SUPPORT POLE DETAILS

NOT TO SCALE

NOTE
ALL HARDWARE, FITTINGS, AND WIRE ARE TO BE GALVANIZED AND OF UTILITY SERVICE GRADE.

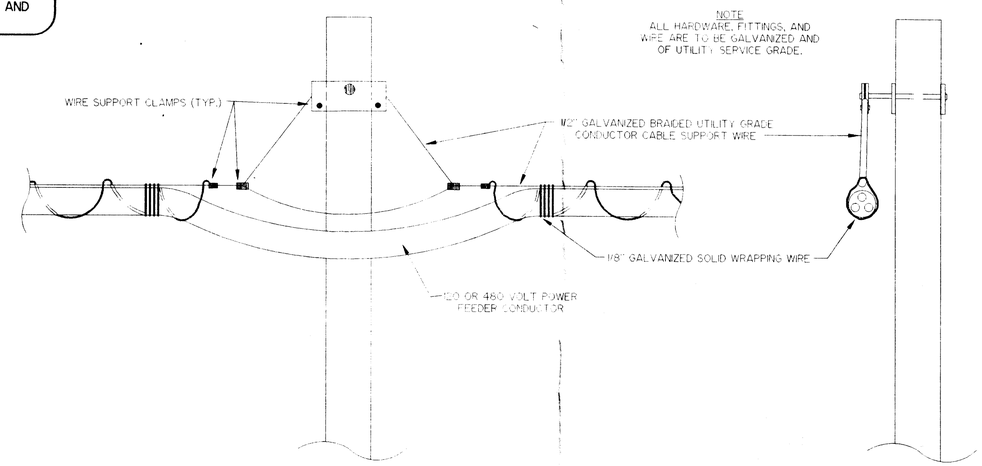

ELEVATION

SIDE VIEW

CONDUCTOR ATTACHMENT AND SUPPORT POLE DETAIL

NOT TO SCALE

PROJECT RECORD

CH2M HILL
P. O. BOX 21647
TAMPA, FLORIDA 33622-1647

DESIGNED G.J.M.
DRAWN G.J.M.
CHECKED G.J.M.
DATE APRIL 7, 1995

Berryman & Henigar
BSI Consultants, Inc. ▪ Henigar & Ray, Inc.
640 EAST HIGHWAY 44 • CRYSTAL RIVER, FLORIDA 34429-4399 • (904) 795-6551

NO.	DATE	REVISION	APP'D. BY
2	8/22/95	GENERAL REVISION	A.D.M.
1	3/1/95	GENERAL REVISION	A.D.M.

CITRUS COUNTY CENTRAL LANDFILL
LEACHATE STORAGE TANK

ELECTRICAL DETAILS

GEORGE J. McDONALD, P.E.
REGISTERED ENGINEER NO. 44740
STATE OF FLORIDA
DATE

JOB NO. 45085
FILE NO. 5A-345
SEC. 1
TWP 19S RGE 18E
SHT. E-2