Florida Department of Environmental Protection
Twin Towers Office Bldg. • 2600 Blair Stone Road • Tallahassee, FL 32399-2400

DEP Form # 62-701.900(2)
Form Title Certification of Construction Completion
Effective Date May 18, 1994
DEP Application No. _____ (Filled by DEP)

Certification of Construction Completion of a Solid Waste Management Facility

FLORIDA DEPARTMENT OF ENVIRONMENTAL PROTECTION
AUG 07 2012
SOUTHWEST DISTRICT TAMPA

FDEP Construction Permit No.: 26254-002-SO/IM County: Pasco

Name of Project: Pasco County Solid Waste Upgrade

Name of Owner: Pasco County Works/Utilities

Name of Engineer: CH2M HILL

Type of Project: Modification of existing site utilities (e.g. construction of new scales, scale house, roadwork, citizen drop off area and wash water holding tank)

Cost: Estimated $6,263,753.00 Actual $4,600,000.00

Site Design: Quantity: N/C ton/day Site Acreage Disposal Area 20 Acres

Deviations from Plans and Applications Approved by FDEP: Deviations were documented through Contract Clarification/Interpretation Request (CCIR). A copy of the CCIR summary is attached.

Address and Telephone No. of Site: 14230 Hays Road, Spring Hill, FL 34610
Telephone: 727-856-0119

Name(s) of Site Supervisor: John Power, Program Solid Waste Operations Manager

Date Site Inspection is Requested: August 7, 2012

This is to certify that, with the exception of deviations noted above, the construction of the project has been completed in substantial accordance with the plans authorized by Permit Nos: 26254-002-SO/IM Dated: June 2, 2011

This "Certification" shall be as set forth in Rules of the State Board of Professional Engineers, Rule 61G15-18.011(4), which states:

> "Certification" shall mean a statement signed and/or sealed by a professional engineer representing that the engineering services addressed therein, as defined in Section 471.005(6), Florida Statutes, have been performed by the professional engineer, and based upon the professional engineer's knowledge, information and belief, and in accordance with commonly accepted procedures consistent with applicable standards of practice, and is not a guaranty or warranty, either express or implied.

Date: 8/6/12

Signature of Professional Engineer

STATE OF FLORIDA 35951 8/6/12 PROFESSIONAL ENGINEER

Type	To	Request From	Number	Issue	Title	Answer	Status	Dated	Responded	Required
RFC	CH2M	CH2M	00001		Power Light		CLO	9/26/2011	10/10/2011	10/3/2011

Pursuant to numerous discussions with Withlacoochee River Electric Cooperative, Inc. to adequately coordinate the relocation of all conflicting power poles/lines, the attached relocation layout and cost proposal are being forwarded for Owner review and acceptance.

The cost proposal however, is substantially larger than the Owner Allowance allocated for this feature of work. Please advise how the Owner would like to assess the additional funds needed to offset the actual cost to perform this work.

Note, power poles/lines relocation cannot begin until full payment is received by Withlacoochee River Electric Cooperative,Inc..

The routing as indicated on the attached drawings is acceptable.

An RFP will be issued in response to this CCIR.

Type	To	Request From	Number	Issue	Title	Answer	Status	Dated	Responded	Required
RFC	CH2M	KOKOLAKI	00002		Schedule of Tests and Inspections		CLO	10/21/2011	10/31/2011	10/25/2011

Pursuant to the discussions held at the Pre-Construction Meeting conducted on 9/14/11 and in compliance with General Conditions, Article 13.4, and Section 01410, 1.01C, all independent testing, inspections and related fees and approvals required by the Contract Documents are the responsibility of the Owner to employ and pay for.

The only specific exception to this is noted in Section 31 23 16, 3.04, whereby the Contractor is to retain a testing laboratory for performing in-place density testing during sub-grade preparations.

Requests for these services will be forwarded to the A/E as prescribed within Section 01410 – Field Testing and Testing Laboratory Services, The Contractor shall provide for all necessary field samples and coordination as may be required by the testing/inspection company.

Attached, is a detailed breakdown of all testing, inspection, and approval requirements stipulated within the Contract Documents, whether performed in the field, at a laboratory, or by the manufacturer directly. This log of testing and inspection requirements will be utilized as a general template for all such requirements throughout the duration of the project.

Please confirm these requirements and provide a contact list for all agents and labs that will be retained by the Owner for the performance of these services so that they can be properly coordinated.

General Conditions Article 1.34 States:
OWNER shall employ and pay for the services of an independent testing laboratory to perform all inspections, tests or approvals required by the Contract Documents except
...
13.4.3 as otherwise specifically provided in the Contract Documents.

Section 01410 of the Technical Specification provides further definition of the Contractor's responsibility for testing; making the Contractor responsible for all testing that is not specifically stated to be the Owner responsibility within the Technical specification. Section 01410 Paragraph 1.01.A states:
Inspection and testing of materials unless otherwise noted or specified shall be the responsibility of the Contractor. For tests specified to be made by the Contractor, the testing personnel shall make the necessary inspections and tests and the reports thereof shall be in such form as will facilitate checking to determine compliance with the Contract Documents. Five copies of the reports shall be submitted and authoritative certification thereof must be furnished to the Engineer as a prerequisite for the acceptance of any material or equipment.
Section 01410 Paragraph 1.01.C provide further clarification of the Contractor's responsibility for testing where the Owner is specifically indicated to be responsible for testing in the Contract Documents. Section 01410 Paragraph 1.01.C states:
The Owner will employ and pay for services of an independent testing laboratory to perform testing specifically indicated in the Contract Documents, unless otherwise specified.
1. Contractor shall complete a "Test Request and Test Result Summary" form included with this section for each test required by the Owner's independent testing laboratory. The form shall be completed and submitted to the Owner's RPR by 11:00 a.m. on the day prior to the test requirement.
2. Contractor shall cooperate with the laboratory to facilitate the execution of its required services.
3. Employment of the laboratory shall in no way relieve Contractor's obligations to perform the work of the Contract.

Type	To	Request	From	Number	Issue	Title	Answer	Status	Dated	Responded	Required
RFC	CH2M		KOKOLAKI	00002A		Pursuant to the response	CCIR 002	CLO	11/16/2011	11/8/2011	11/23/2011

Pursuant to the response issued to preceding CCIR No. 002, please advise to the following additional interpretations to the Contract Documents:

See Section 00800, SC-13.4, which clarifies the Owner's responsibility to employ, pay for, and manage the services for all testing, inspections, and/or approvals specified within the Contract Documents. This amendment gives no exception to the requirement stipulated.
However, as a direct response to the article references supplied within CH2MHILL's response to CCIR No. 002; Section 01410, 1.01A simply states that responsibility to test and/or inspect work is by the Contractor. These requirements will be coordinated by our office to ensure compliance on initial testing or inspections of materials and/or installations. However, Section 01410, 1.01C clearly states that the Owner will employ and pay for such services, which coincides with the above referenced Section 00800, SC-13.4.
It should also be noted that Section 01410, 1.03 and 1.04 further discloses the Contractor's responsibilities, which in no way requires the Contractor to retain, employ, pay for, or otherwise directly manage the requirements specified under Section 01410.

The Tests and Inspections Log transmitted within preceding CCIR No. 002 holds true with regards to the requirements of the Contract Documents.

Please also take note that our office is currently performing material testing in order to maintain progress with construction on both sites. In response to discussions at the pre-construction conference (subsequently documented within the minutes of the conference, Topic IX.10; below insert)...
10. It was discussed and decided at the meeting that the Contractor would schedule all testing (soil, concrete, etc.) with an independent testing lab (PSI will be used). Where testing is the County's responsibility in the Contract Documents, the County will reimburse the Contractor for passed tests. Contractor will submit test result as QA Submittals.
...our office has omitted the use of the Test and Inspection Request Form supplied within Section 01410 pursuant to the above statement as no formal response to the matter was provided within the preceding CCIR. Also per the above excerpt, our office has subsequently begun procuring testing services from PSI, Inc. To help mitigate this matter, our office will submit an NPC each month for all testing, inspection, and/or approvals in accordance with the Tests and Inspections Log (attached) supplemented within the issuance of CCIR No. 002.

The Owner and Engineer acknowledge the Contractor's interpretation of the contractual requirements for testing, but disagree. The Owner's and Engineer's interpretation of the testing requirement remains as stated in the response to CCIR 002, which is: The Contractor is responsible for conducting, paying for, and managing all testing, inspections, and/or approvals specified within the Contract Documents except where the Owner is specifically identified as having the responsibility for testing, which are:
-Section 01810 - Equipment Testing and Facility Start-Up, Paragraph 3.03C(3) - Sampling and Lab Analysis
-Section 03 01 32 - Repair Of Vertical and Overhead Concrete Surfaces, Paragraph 3.06 - Field Quality Control Testing
- Section 03 21 00 - Reinforcing Steel, Paragraph 3.03 - Testing and Special Inspections
-Section 05 12 00 - Structural Steel Framing, Paragraph 3.9 - Field Testing and Special Inspections
-Section 05 50 00 - Metal Fabrications, Paragraph 2.07B(1) - Hot-Dip Galvanizing Testing and Inspections
-Section 13 34 19 - Metal Building Systems for the Scalehouse, Canopy, Paragraph 3.08 - Field Quality Control
- Section 32 92 00 - Turf and Grass, Paragraph 3.05 - Field Quality Control

Type	To	Request	From	Number	Issue	Title	Answer	Status	Dated	Responded	Required
RFC	CH2M		KOKOLAKI	00002B		Pursuant to the response	CCIR 002	CLO	1/16/2012	1/16/2012	1/23/2012

Pursuant to the response issued to preceding CCIR No. 002, please advise to the following additional interpretations to the Contract Documents:

See Section 00800, SC-13.4, which clarifies the Owner's responsibility to employ, pay for, and manage the services for all testing, inspections, and/or approvals specified within the Contract Documents. This amendment gives no exception to the requirement stipulated.
However, as a direct response to the article references supplied within CH2MHILL's response to CCIR No. 002; Section 01410, 1.01A simply states that responsibility to test and/or inspect work is by the Contractor. These requirements will be coordinated by our office to ensure compliance on initial testing or inspections of materials and/or installations. However, Section 01410, 1.01C clearly states that the Owner will employ and pay for such services, which coincides with the above referenced Section 00800, SC-13.4.
It should also be noted that Section 01410, 1.03 and 1.04 further discloses the Contractor's responsibilities, which in no way requires the Contractor to retain, employ, pay for, or otherwise directly manage the requirements specified under Section 01410.

The Tests and Inspections Log transmitted within preceding CCIR No. 002 holds true with regards to the requirements of the Contract Documents.

Please also take note that our office is currently performing material testing in order to maintain progress with construction on both sites. In response to discussions at the pre-construction conference (subsequently documented within the minutes of the conference, Topic IX.10; below insert)...
10. It was discussed and decided at the meeting that the Contractor would schedule all testing (soil, concrete, etc.) with an independent testing lab (PSI will be used). Where testing is the County's responsibility in the Contract Documents, the County will reimburse the Contractor for passed tests. Contractor will submit test result as QA Submittals.
...our office has omitted the use of the Test and Inspection Request Form supplied within Section 01410 pursuant to the above statement as no formal response to the matter was provided within the preceding CCIR. Also per the above excerpt, our office has subsequently begun procuring testing services from PSI, Inc. To help mitigate this matter, our office will submit an NPC each month for all testing, inspection, and/or approvals in accordance with the Tests and Inspections Log (attached) supplemented within the issuance of CCIR No. 002.

Superseded by 00002C

Type	To	Request	From	Number	Issue	Title	Answer	Status	Dated	Responded	Required
RFC	CH2M		KOKOLAKI	00002C		Pursuant to the response CCIR 002		CLO	1/16/2012	1/16/2012	1/23/2012

Pursuant to the response issued to preceding CCIR No. 002B and subsequent meeting discussions, please advise with acceptance of the following REVISED proposition for the purpose of fairly and reasonably resolving this issue.

The attached revised Tests and Inspections Log, dated 12/12/11, incorporates modifications to responsibility or otherwise further clarifies the responsibility for each test and inspection required by the Contract Documents. We have negotiated with our subcontractors and suppliers in order to assume additional testing requirements.

In addition to the noted tests or inspections that our office will take full ownership of with no exceptions, we do offer a compromise for the following:

•□JKC will relinquish additional mark-up for all materials testing that we are agreeing to manage on behalf of the Owner. See responsibility revisions to Section 05 05 23 – Welding, and Section 32 12 16 – Asphaltic Concrete Paving.
•□JKC will pay for all electrical testing and commissioning costs as indicated within the attached Tests and Inspections Log.
•□The credit under RFP 003 shall be cancelled.
•□An RFP will be issued to cover the $5,098.00 required to add another CCTV service agreement. The RFP must include the funds allocated to the truck scale service agreement that is no longer desired by the County.
•□Waive the requirement for services of an independent testing agency to perform T&B of the HVAC system. In turn, our HVAC subcontractor will make the necessary adjustments to the system at the time of completion to ensure the system is operating properly.

Please advise as soon as possible.

The above stated compromise is acceptable. Appropriate RFP action will be implemented as follows below:
RFP 003 PVC/CLDI will be voided and RFP 012 CCTV Service Agreement will be issued.

Type	To	Request	From	Number	Issue	Title	Answer	Status	Dated	Responded	Required
RFC	CH2M		KOKOLAKI	00003		Storm Pipe Conflict with Unknown P		CLO	10/18/2011	10/21/2011	10/25/2011

On the EAST site, please identify the pipe located at the N-W corner of the CDO area (see attached photos). It is not shown on the drawings and appears to be in conflict with the 18" RCP between structures S-11 and S-12 (drawing 06-C-105).

Currently the unknown pipe is 23' south of the silt fence line. The 18" RCP lays out about 23' south of the silt fence line. On-site county personnel could not identify this pipe nor its purpose. Please confirm which pipe needs to be relocated and where.

The pipe was installed as a temporary piezometer. The piezometer is being removed by the county.

Type	To	Request	From	Number	Issue	Title	Answer	Status	Dated	Responded	Required
RFC	CH2M		KOKOLAKI	00004		Anchor Bolts And Leveling Nuts		CLO	10/18/2011	10/18/2011	10/25/2011

On the EAST and WEST sites, please confirm if it will be acceptable to use conventional anchor bolts and leveling nuts for
the steel framing at the CDO canopies in lieu of embedded base plates per detail B on 40-S-301 and spec detail 0512-002
(drawing 30-S-301 for West).
Anchor bolts and leveling nuts are the only means of adjustment available to keep the steel framing true and level as well it is
the strategy to compensate for slight variations in embed elevation or embed movement during concrete pours.
If embed plates are utilized any slight gaps between the base-plate and the columns will need shims and/or extra weld, which
can look less aesthetically appealing even though it is structurally sound.
Note #1 on Spec detail 0512-002 mentions anchor bolts, but it is unclear if it is acceptable to use anchor bolts.
If anchor bolts, leveling nuts, and grout pack are an acceptable variance, please confirm size and embedment. There will be
no cost impact for the proposed change.

"Use galvanized, ASTM F1554 anchor rods with a 39" embed and double nuts at the end. With these anchors you can follow the Standard Detail 0512-001."

Type	To	Request	From	Number	Issue	Title	Answer	Status	Dated	Responded	Required
RFC	CH2M		KOKOLAKI	00005		Slip-Form Paving at CDO Area		CLO	10/5/2011	10/21/2011	10/25/2011

Please refer to specification section 32 13 13, paragraph 3.03 "Slip Form Paving". We believe that slip-form paving is not an
applicable method for placing concrete in the CDO considering the particular configuration of the areas and walls.
We plan to pump-place concrete in large pours with stationary side form in accordance with paragraph 3.04 "Stationary Side
Form Construction" while installing a construction joint at the edge of pours and contraction joints at max spacing of 15' oncenter
in both directions per detail 3213-240. Please confirm acceptance.
Dave Crosbie, Project Manager - EAST
Prepared by
10/5/11
Date
Response Assigned to:
Prepared by
Date

JKC's proposed alternative is acceptable.

Type	To	Request	From	Number	Issue	Title	Answer	Status	Dated	Responded	Required
RFC	CH2M		KOKOLAKI	00006		Service Agreements		CLO	11/9/2011	11/9/2011	11/15/2011
		It has become apparent that the contract contains only a single set of service agreements (Truck Scale and CCTV), enough to cover only one site, East or West. The attached bid form requested pricing of ONE service Agreement for the Truck Scale and ONE for CCTV. Please advise which site the service agreements apply to or if an additional set of service agreements are desired.					The County's Notice of Award letter dated July 21, 2011 indicated that the County intended to award PCU Project No. 06-048-00/Bid No. IFB-DL-11-079 to J Kokolakis Contracting, Inc (JKC) in the amount of $9,446,945.00 and that the award was to include "Base Bid Option C, Additive Alternate No. 1 (except Item No. 1-2) and all Service items." The County and the Engineer acknowledge that there was a miscalculation of the Contract Amount; however, the scope of the work intended for the quoted price was clearly stated and not questioned by JKC prior to execution of the Contract. In order to reach resolution of the price miscalculation, the County and Engineer proposed the following: - Delete the Service Agreement for the Scale (Unit Price Bid Item No. 1) from the Contract - Add a Service Agreement for the Closed Circuit Television (CCTV) (Unit Price Bid Item No. 2) to the Contract (i.e., JKC will provide two {2} CCTV System Service Agreements, one for West Pasco and one for East Pasco) - There will be no change in Contract Amount or Contract Time, and no monies will be paid to JKC from any of the project allowances. JKC shall provide written concurrence, if they are in agreement with the proposed resolution as stated above.				
RFC	CH2M		KOKOLAKI	00007		Structural Clarifications		CLO	10/18/2011	10/19/2011	10/25/2011
		Please respond to the follow questions in the East Site CDO area. 1. Please confirm the edge-of-canopy dimensions referenced from column lines per attached Sketches #1 and #2. 2. Please provide the dimension from the face-of-wall to locate the CDO columns per attached sketch #3. Note: top-ofwall will receive ¾" chamfers typically per 031000. 3. Do details 0512-002 and 0512-003 apply to the four pilasters at the "Central Canopy" clouded on attached sketch #4? 4. Please verify the W16x36 will cantilever past the W18x46 to support the W16x36 typically at the "Central Canopy" per Sketch #5. 5. Please confirm the requirement of deck angle at the "Central Canopy" per Sketch #5. Provide size, dimensions to locate, and weld pattern					Responses below: 1. 2'-6" dimension to be verified during shop drawing layout to center canopy over supporting columns within 2" in each direction. Locate angle and connect to edge of I-beam per blow-up detail in Section-F/30-S-302. 2. 9". Contractor should verify with the dimensions given between columns and length of wall. If constructability issues are a concern please provide a section showing how the chamfer will affect construction. 3. Yes. 4. Yes. 5. 2x2x1/8 continuous deck angle should be located and connected to edge of I-beams per blow-up detail in Section-F/30-S-302.				
RFC	CH2M		KOKOLAKI	00008		Platform Details at Scalehouse		CLO	10/18/2011	10/21/2011	10/25/2011
		The following questions pertain to the steel platforms at the scale houses and are applicable to both the East and West sites. 1. As there is not a stair attached to one of the platforms, should the perimeter channel around the stair-less platform be a C8 x 11.5 typically, or is the C12 x 20.7 required at one end? See Sketch #1 2. Please confirm a 1/1/2" grout pack under all support columns at the support platform. See Sketches #2 and #3. 3. Please confirm the embedment length of the expansion anchors for the platform and stair supports.					1. C8x11.5 is acceptable on all ends without stairs. 2. Confirmed. 3. Meet Specification Section 05 50 00 (3.03). Let us know if there are any discrepancies with thickness of concrete that anchors are embedded into.				
RFC	CH2M		KOKOLAKI	00009		Stringer Elevation at Platform Stai		CLO	10/12/2011	10/18/2011	10/25/2011
		The following question is applicable to both the East and West. There is a conflict between plan detail G/20-S-301 (G/10-S-301 for West) and specification detail 0551-041. The plan detail shows the top of the stair stringer (the horizontal portion) flushing out with the top of steel, which the grating will sit on top of both steel members. The specification detail shows the top of the stringer (horizontal portion) higher than the top of steel, which indicates that the grating will sit between the stringers supported by angles. Please confirm which 'look' is preferred.					"Please follow the Standard Detail 0551-041."				

Type	To	Request	From	Number	Issue	Title	Answer	Status	Dated	Responded	Required
RFC	CH2M		KOKOLAKI	00010		Process Piping Specification		CLO	10/18/2011	10/25/2011	10/25/2011

Specification 40 27 00 "Process Piping" calls for any W1 pipe larger than 4" to be cement-lined ductile iron. This type of pipe is typically utilized for water and wastewater process plants and seems excessive for our application, where it's just scheduled to serve the new fire hydrants (on the East site)
As such, any W1 pipe smaller than 4" is scheduled to be CPVC. Regular Schedule-40 PVC seems to be a fully adequate application for our underground potable water service.
Please verify if this specification indeed is meant for this application or if simply the fire hydrant pipe can be submitted as typical AWWA C-900 municipal water pipe and the domestic water can be submitted as Schedule 40 PVC along will all referenced standards and product information as a variance for approval.

3" and smaller W1 yard piping: PVC SCH 40 is acceptable. PVC schedule 40 pipe ends shall not be manually threaded.

4" and larger W1 yard piping: AWWA C900 PVC pipe for the fire line to the fire hydrants is acceptable. AWWA C900 cost is significantly less than CLDI, therefore, a credit would be expected. Test pressure on supply piping to fire hydrants is 200 psi per NFPA.

Type	To	Request	From	Number	Issue	Title	Answer	Status	Dated	Responded	Required
RFC	CH2M		KOKOLAKI	00011		Door Frame and Hardware Clarificati		CLO	10/12/2011	12/12/2011	12/14/2011

1. Regarding door 40-101A in the East Attendant Building, please confirm that the frame type is F-1, not type F-4 as indicated within the hardware schedule in section 08 06 01. If this opening indeed requires type F-4, please provide an elevation for this type, as F-4 isn't specified.

2. Hardware Set #1 shown in Supplement #1 "Hardware Groups" in section 08 71 00 refers to section 08410. Please confirm that this section doesn't exist within our current specification set. As a note, hardware set #1 is detailed for the exterior storefront doors, therefore hardware options for these doors are limited only to impact tested door, frame, and hardware assemblies. Hardware will coordinated as best as possible with the hardware specifications as indicated in section 08 51 14 2.02.H, but will most likely be standard manufacturer's hardware packages.

Question 1: Frame is type 1 and not type 4.
Question 2: Hardware for Aluminum doors is covered in 08 51 14 Aluminum Entrances and Windowwalls. It is understood that the hardware selected and supplied is contingent on Miami-Dade NOA or other third party testing that meets component testing for total door assembly.

Type	To	Request	From	Number	Issue	Title	Answer	Status	Dated	Responded	Required
RFC	CH2M		KOKOLAKI	00012		Unforeseen Buried Fiber Optic Line		CLO	10/25/2011	10/31/2011	11/3/2011

As of today, an unforeseen fiber optic line has been discovered running about 10-feet South and parallel of the known fiber optic line identified on Sheet 05-C-104. It appears the line wyes off from the known fiber optic line near the pull box indicated at the East fence line on the same sheet. However, approximately 600-feet West of the existing pull box, the signal is lost. From this point, Sunshine State One Call cannot locate any further. The expertise required to complete the location is outside the scope of their services.

Currently, we are unable to determine where the unforeseen fiber optic line terminates. It is recommended that an independent testing company complete the location and properly identify the purpose of the unforeseen fiber optic line so we may move forward with site clearing operations within the area. In some locations, the conduit is only 1.5-feet deep.

Please advise as soon as possible.

According to information received from Pasco County, the second line is a copper telephone line that was installed by the local telephone company. Existing communications lines are then a fiber optic line on the south side of the fence and a telephone line on the north side of the fence. The fiber optic line was shown on Drawings 05-E-101, 30-E-102, 90-D-104, and designated for relocation. The telephone line was not on the drawings but needs to be re-located by the telephone company. All raceways for the telecom system are shown as a part of this Contract as noted on drawing 05-E-101 and only the services of the telecom provider were not included. The local telephone company is Verizon and detailed contact information can be obtained from Pasco County, if necessary. Contact the telephone company and obtain a quote for re-routing the telephone line in raceways provided under the contract in order to provide telephone service to all existing facilities that will lose telephone service if this line were to be removed from service. Have the telephone company route the telephone line in the same conduit, but separate inner-duct as the fiber optic line or in designated telecommunications conduits as shown on Drawings 05-E-101 and 30-E-102. Telephone service and fiber optic communications shall be established through the re-routed lines before demolition occurs in the affected areas as noted on drawings 30-E-102 and 90-D-104.

Type	To	Request	From	Number	Issue	Title	Answer	Status	Dated	Responded	Required
RFC	CH2M		KOKOLAKI	00012A		Unforeseen Buried Fiber Optic Line		CLO	11/2/2011	11/2/2011	11/9/2011

Please refer to the attached plan sheets, which clearly indicate routing of both Pasco County's known fiber optic line as well as a suspected phone line not known to exist prior to sub-surface utility investigations.

In correction of the preceding CCIR No. 012, the suspected phone line (not identified within the Contract Documents) was located by Sunshine State One-Call services without any lose of signal or conflict otherwise. The known fiber optic line however, was located by Pasco County Utility directly, and it was this line that ultimately lost signal with the County's equipment. Today though, County personnel were able to verify the continuation of this fiber optic line (without locating equipment), which does continue to run Eastward, on the South side of the existing fence line, only changing direction toward the North and into the known communications hand hole directly South of the existing scale house as indicated within the Contract Documents. Our office will request that Sunshine State One-Call services attempt to complete the trace of the County's fiber optic line so that we may have a definitive trace on the line.

With regards to the unforeseen and suspected phone line discovered along the North side of the existing fence line, it is recommended that this line be rerouted with the existing fiber optic line, within the same raceway, as shown within the Contract Documents. If as suspected, this phone line does service the existing scale house. Therefore, the line must be relocated at the same time as the existing fiber optic line, prior to demolition of the old, as not to impede service to the existing scale house during construction. We request that the County verify the existence of this line and to what purpose this line serves in the area.

Please review and advise if this method of resolution is acceptable. If so, please advise how and where this line should re-interface with the existing service line once relocated. A prompt response is appreciated.

CCIR 012A was received after the response to CCIR 012 had been formulated and we believe that the response to CCIR 012 cover any additional issues identified in CCIR 012A. CCIR 012A has therefore been closed and will not be answered. Please re-issue CCIR 012A if additional clarification is required.

Type	To	Request	From	Number	Issue	Title	Answer	Status	Dated	Responded	Required
RFC	CH2M		KOKOLAKI	00012B		Unforeseen Buried Fiber Optic Line		CLO	11/9/2011	12/12/2011	12/12/2011

Pursuant to the recent issuance of the attached CCIR No. 012 - Revision 01 and subsequent RFP No. 004, the attached proposal and illustration from Verizon serves as an estimated cost to implement the alternative phone line relocation proposed by CH2MHILL. The attached proposal from Verizon does not include underground raceway or directional drilling required to cross the roadway as indicated. These services are specifically excluded and shall be performed by others.

Should it be requested by the County that our office perform the raceway installation as excluded by Verizon, it would exceed the cost of the initially proposed amount provided within NPC No. 002, which is specific to relocating new phone line through our duct bank on the south side of the CDO area. It is suggested that the County approve the initial proposal and associated costs in order to move forward with our construction operations in the most timely and cost effective manner available. If agreed, please issue a formal approval of the costs associated with NPC No. 002 and we'll proceed with the relocation immediately.

Please advise how to proceed as soon as possible.

The attached proposal is rejected in lieu of the earlier response to CCIR 012.

This answer and the letter response to RFP 004 close CCIR 012-Revision No. 1 and CCIR – 012B.

Type	To	Request	From	Number	Issue	Title	Answer	Status	Dated	Responded	Required
RFC	CH2M		KOKOLAKI	00012REV		Unforeseen fiber optic line		CLO	11/16/2011	11/9/2011	11/23/2011

As of today, an unforeseen fiber optic line has been discovered running about 10-feet South and parallel of the known fiber optic line identified on Sheet 05-C-104. It appears the line wyes off from the known fiber optic line near the pull box indicated at the East fence line on the same sheet. However, approximately 600-feet West of the existing pull box, the signal is lost. From this point, Sunshine State One Call cannot locate any further. The expertise required to complete the location is outside the scope of their services.
Currently, we are unable to determine where the unforeseen fiber optic line terminates. It is recommended that an independent testing company complete the location and properly identify the purpose of the unforeseen fiber optic line so we may move forward with site clearing operations within the area. In some locations, the conduit is only 1.5-feet deep.
Please advise as soon as possible.

This CCIR 012 Revision No. 1 replaces and supersedes previously issued CCIR 012 and CCIR 012A.

Contact Verizon to run telephone line from the Maintenance Building to the closest available telephone connection at the Resource Recovery Facility/Class I Landfill Area. RFP 004 will be generated requesting a formal proposal for this change.

Abandon the telephone line that currently runs from the Class III Scalehouse to the Maintenance Building through the CDO area currently *under construction.*
The existing fiber optic line shall be re-located per the Contract Documents.

Type	To	Request From	Number	Issue	Title	Answer	Status	Dated	Responded	Required
RFC	CH2M	KOKOLAKI	00013		Maintenance Building Renovations		CLO	10/28/2011	11/16/2011	11/4/2011
		Immediately following the Monthly Construction Progress Meeting, conducted on 10/20/11, JKC visited Pasco County's maintenance building near the jobsite to discuss requested renovations to one of the office spaces within the building. The attached plan sheet depicts the renovations requested by the County during the visit. Regarding finishes for the renovation, we've been directed to utilize the same color, type, texture, and/or patterns as specified for the current Pasco County Solid Waste Upgrade project. Variables to this proposal, such as possible HVAC and waterproofing remediation will be assessed only after review of the current conditions. If this preliminary proposal is accepted, we'll begin to assemble the scope required to remediate the current issues and advise the county of the necessary corrections. Upon acceptance of the necessary waterproofing and HVAC corrections (if any), we'll then forward an NPC for review and acceptance, which includes all costs necessary to both correct known issues as well as refinish the space as shown within the attached plan sheet. Please note any desired adjustments to this proposal and advise with acceptance at your earliest convenience.				The scope of work is acceptable for pricing purposes. Please be sure to include power strips for the radio chargers in the closet and a mini refrigerator. An RFP will be issued for this work.				
RFC	CH2M	KOKOLAKI	00014		Existing Asphalt Patch at Existing		CLO	10/27/2011	10/31/2011	11/4/2011
		See attached photo, representative of the asphalt pavement area just South of the existing scale house on the West project site. The attached as-built of the property does not indicate an underground utility at this location, nor does the attached Contract Drawing Sheet 05-C-102. If an underground condition exists here, which crosses paths with the new domestic water and sanitary sewer distribution piping shown on Sheet 05-C-102, we'll need to coordinate a plan to remedy the condition prior to installation of these utilities. Please advise what this patch is from and where the underlying condition terminates.				The County is not aware of any utilities in the area in question. They believe that the patches were installed to provide drainage and alleviate pooling water around the scalehouse. Please proceed with caution and consider doing test holes when there is uncertainty regarding underground conditions.				
RFC	CH2M	KOKOLAKI	00015		East Site: 8" and 2" Water Taps		CLO	11/2/2011	11/7/2011	11/9/2011
		On the East Site, please confirm if the locations of the 2" and the 8" water taps can be revised to that shown on the attached sketch. Connecting the new water lines to the existing lines where shown on 06-C-103 is not possible. The connection points are shown beneath the existing scale and scalehouse, which needs to stay in operation, therefore alternate connection points are proposed on the attached as-built. A second alternate is also shown.				For the 8" fire water tap, the alternate location is acceptable as long as the existing tree and septic drain field are not damaged. For the 2" potable water tap, the first alternate location is not acceptable due to its proximity to the septic drain field. This location may result in contamination of the water line. The original location or the 2nd alternate location shown are acceptable provided that there is no change in Contract Time or Amount associated with the alternate location..				
RFC	CH2M	KOKOLAKI	00016		WEST: Selective Site Clearing		CLO	11/2/2011	10/31/2011	11/9/2011
		Pursuant to the recent requests of Pasco County, some areas of the project site will remain undisturbed in order to preserve existing vegetation. Only portions of the site, which will be impacted by construction activity or otherwise pre-selected by the County prior to site clearing operations, are to be removed. JKC is heeding to this request in good faith that no recourse (without compensation) will be pursued by the County at a later date should it be decided that the existing vegetation be cleared from the site prior to final completion. Please validate this request. Also, please confirm acceptance of the selected portions of vegetation requested to remain undisturbed.				Per our recent phone discussion, we'll void this CCIR.				
RFC	CH2M	KOKOLAKI	00017		Sandy Clay Soil – East Site		CLO	11/1/2011	11/2/2011	11/9/2011
		The Owner has expressed concerns about the ability to compact the sandy clay soil excavated and currently stock-piled on the EAST site. Please review the attached soils report and proctor test and confirm if there are any concerns using this material in back-filling operations either at ponds, CDO, or scalehouse pads.				The sandy clay material is acceptable for use as earthfill provided that it is compacted in accordance with the drawings and specification. The sandy clay material shall not be use within 5 feet of retaining wall, footers or other structures or with 2 feet of the the bottom of pavement.				

Type	To	Request	From	Number	Issue	Title	Answer	Status	Dated	Responded	Required
RFC	CH2M		KOKOLAKI	00018		PC Scales, Inc. Software Clarificat		CLO	11/2/2011		11/9/2011
		The above listed plan and specification references stipulate that a "PC Scale Client License" be provided with the truck scale system. However, PC Scales, Inc. has brought to our office's attention that Pasco County may want to, in addition to the software license, incorporate a PC Scale, Inc. DAT System (data attached) for future use at the East and/or West facility. If so, please advise what additional infrastructure will be necessary to properly incorporate this system. *Please note, the DAT system is specifically designed for use at unattended scales for driver-assisted access. In addition, PC Scales, Inc. has mentioned that Pasco County may want to purchase a 5-year Software Support Package, which will provide continual technical support for their software throughout a 5-year period. Currently, no requirement exists within the Contract Documents, which requires this additional service.		This will be addressed in CCIR 018A and CCIR 018B.				
RFC	CH2M		KOKOLAKI	00018A		PC Scales, Inc. Software Clarificat		CLO	1/4/2012	1/9/2012	1/11/2012
		The above listed plan and specification references stipulate that a "PC Scale Client License" be provided with the truck scale system. However, PC Scales, Inc. has brought to our office's attention that Pasco County may want to, in addition to the software license, incorporate a PC Scale, Inc. DAT System (data attached) for future use at the East and/or West facility. If so, please advise what additional infrastructure will be necessary to properly incorporate this system. *Please note, the DAT system is specifically designed for use at unattended scales for driver-assisted access. In addition, PC Scales, Inc. has mentioned that Pasco County may want to purchase a 5-year Software Support Package, which will provide continual technical support for their software throughout a 5-year period. Currently, no requirement exists within the Contract Documents, which requires this additional service.		Add PC Scale, Inc, DAT System for the East Pasco Site and a 5-year Service Agreement for all County owner PC Scales components. Provide a direct pass through of the cost for these additions in accordance with the attached pricing sheet (5 pages) provided by PC Scales RFP 007 will be generated. The peripheral components required for the installation of the PC Scale DAT System will be addressed in CCIR 018B.			
RFC	CH2M		KOKOLAKI	00018B		PC Scales, Inc. Software Clarificat		CLO	1/4/2012	1/9/2012	1/11/2012
		The above listed plan and specification references stipulate that a "PC Scale Client License" be provided with the truck scale system. However, PC Scales, Inc. has brought to our office's attention that Pasco County may want to, in addition to the software license, incorporate a PC Scale, Inc. DAT System (data attached) for future use at the East and/or West facility. If so, please advise what additional infrastructure will be necessary to properly incorporate this system. *Please note, the DAT system is specifically designed for use at unattended scales for driver-assisted access. In addition, PC Scales, Inc. has mentioned that Pasco County may want to purchase a 5-year Software Support Package, which will provide continual technical support for their software throughout a 5-year period. Currently, no requirement exists within the Contract Documents, which requires this additional service.		See Attached CH Response With Attachments			
RFC	CH2M		KOKOLAKI	00019		WEST CDO Area Push Wall Foundation		CLO	11/7/2011	11/7/2011	11/14/2011
		Please advise on both clarification requests, specific to the above subjected feature of work: 1. Sheet 30-S-101 identifies a cut section (B/30-S-301) through the East wall of the CDO area push wall. This cut section indicates a wall thickness of 2'-0", whereas Sheet 30-S-101 indicates a thickness of 1'-4" typical for the entire push wall. Please advise if reference to Detail B/30-S-301 on Sheet 30-S-101 should actually reference Detail D/30-S-301, which indicates the correct wall thickness of 1'-4". 2. Detail G on Sheet 30-S-101 is specific to the North wall foundation at the CDO area push walls. The detail reflects a thickened edge slab foundation with bottom of footing 1'-4" below grade. Cross-referencing this same location on Sheet 05-C-106, the thickened edge slab must slope from an elevation of 51' down to 50', East to West respectively. Since the bottom of the thickened edge slab must be at a minimum of 1'-4" below grade across the entire length of wall, the thickened edge would be 40" thick starting at the East and will taper down to 28" thick when it terminates at the West end of the wall section. To eliminate such a large footing, we'd like to request that a continuous footing with a CIP stem wall be used, such as detailed on D/30-S-301. Please advise if this would be acceptable. 3. On Sheet 30-S-101 along the East wall of the Push wall at the CDO area, there is a jog in the footing. Please advise if this jog is necessary. Per above #1, we'd like to request that the Type D wall section, on Sheet 30-S-301, be used continuous for all three sides of the push wall.		1. The wall should be 1'-4" thick with the slab framing into it per Section-D/30-S-301, and concrete columns placed monolithic with the wall per Details 2 and 4/30-S-301. 2. That is acceptable as long as the slab ties into the wall. 3. That is acceptable.			

Type	To	Request	From	Number	Issue	Title	Answer	Status	Dated	Responded	Required
RFC	CH2M		KOKOLAKI	00020		Corner Bar Leg Length Conflict		CLO	11/7/2011	11/11/2011	11/14/2011
		Please refer to Detail 0330-003, Note #3. Per this stipulation, the corner bars at the outside face of walls must have legs of 16'-0" in most cases. Our rebar fabricator cannot safely bend rebar with legs of that length. They will also not be able to transport bars with this leg length. The maximum leg length for corner bars is limited to 6'-0" from the fabricator. Please advise if this adjustment is acceptable as maximum for all corner bar locations.					All that is required is a proper lap length. When the corner bars match typical horizontal bars that completes requirements. When corner bars exceed typical horizontal reinforcing, then the spliced bars will need to be of proper size and length to meet the detail.				
RFC	CH2M		KOKOLAKI	00021		Horizontal Rebar Size Discrepancy		CLO	11/7/2011	11/11/2011	11/14/2011
		Details 1-4/30-S-301 all require #5 horizontal rebar. However, D/30-S-301 and G/30-S-101 require #6 horizontal rebar. Please verify the correct horizontal rebar size for all wall types indicated.					All 12" thick walls shown on this sheet shall have #5 @ 10" each face horizontal. All 16" or 24" thick walls shall have #6 @ 10" each face horizontal.				
RFC	CH2M		KOKOLAKI	00022		Grading at Existing Overflow Pipe		CLO	11/21/2011	12/13/2011	11/28/2011
		There is an existing overflow pipe coming from the pond to the north of the CDO area that will be above grade upon completion of final grading. The condition has been discussed with the CH2MHill representative on site already. Please advise if anything should be done with this pipe.					The pipe is to be cut at the north edge of the new swale and a mitered end section constructed at the pipe termination. The swale is to be lined on the bottom and sides with 4-inch fabric formed concrete revetment beginning 2 feet upstream of the pipe and terminating 5 feet downstream of the pipe. The cost of this modification shall be included in the cost proposal being prepared for RFP 005 – Rip Rap at Stormwater Ponds.				
RFC	CH2M		KOKOLAKI	00023		Grating Clarification at Scalehouse		CLO	11/22/2011	11/21/2011	11/29/2011
		Please clarify which type of grating is required for the platforms and stair treads at the scalehouses. Detail 0553-001 lists types GS-1, GS-2, and GS-3, all of which have different center-to-center cross bar spacings. Detail 0551-041 indicates GS-2 grating, but points to the single welded-on bearing bar which doesn't make sense. Specifications contradict the details and list SGF and SGI series of gratings. We have included a 19SG series aluminum grating in our pricing per the Volume #3 details referenced above and spec section 05 53 00, paragraph 2.01.A.3. Please advise of the bearing bar spacing, swage-locked criteria, center-to-center spacing, etc.					The different types of grating supports in the Standard Detail coincide with the specific construction types. The bearing bar that is pointed to in Detail 0551-041 is also shown in Detail 0553-001. Although the arrow should be slightly off the bar, it is apparent that the bearing type is GS-2 and that there is a bar welded to the top of the beam to prevent the grating from sliding off. Bearing bars are spaced at 1-3/16 inch on centers. Transverse bars are aluminum bar type with 2" center to center spacing when the depth of grating is 2" or greater and 4" spacing when the depth of grating is less than 2". The specifications provide additional detail regarding bar types that are acceptable from a number of manufacturers. If you plan to deviation from the listed manufacturers, let us know at the time of the submittal.				
RFC	CH2M		KOKOLAKI	00024		SSMRS Finish Texture Notification		CLO	11/18/2011	11/18/2011	12/9/2011
		Per the above referenced specification section, the SSMRS is stipulating an embossed surface for the panel finish. Please note that the basis-of-design manufacturer, Berridge, will not warranty their product with an embossed surface should it be applied to a low-slope roof as this project requires. The textured surface applied in a low-slope application would inhibit water from wicking from the surface completely and would therefore create a much higher possibility for water damming and surface pitting, which could eventually compromise the longevity of the surface finish. Please advise if a smooth panel finish is acceptable for us on this project.					Closed By Contractor				
RFC	CH2M		KOKOLAKI	00024A		SSMRS Finish Texture Notification		CLO	12/2/2011	12/14/2011	12/16/2011
		Per the above referenced specification section, the SSMRS is stipulating an embossed surface for the panel finish. Please note that the basis-of-design manufacturer, Berridge, does not manufacture embossed panels. Please advise if a smooth panel finish is acceptable for us on this project.					Berridge Standard Kynar 500 (two coats min) Double lock Zee Lock panel finish is acceptable.				
RFC	CH2M		KOKOLAKI	00025		CDO Pour Schedule		CLO	11/18/2011	11/21/2011	12/9/2011
		The pour schedule for the walls at the CDO requires that a section of wall needs to be poured daily. In order for this to happen, the wall forms need to be removed after each pour and then set for the next pour which will be adjacent to the wall that was just poured the day before. Please confirm that wall forms can be removed slightly less than 24 hours after concrete is poured. Curing and protection operations will be maintained as specified.					This does not meet the requirements stated in the specifications.				

Type	To	Request	From	Number	Issue	Title	Answer	Status	Dated	Responded	Required
RFC	CH2M		KOKOLAKI	00026		Pull Box and Hand Hole Usage Clarif		CLO	11/23/2011	12/8/2011	12/9/2011
		Pursuant to the receipt of the A/E's comments to Submittal No. 26 05 33.001, all "pull boxes" were rejected from use on this project, including the "Quazite" brand polymer concrete type for use at non-traffic areas as specified within Section 26 05 33, 2.04F(5). This product is being requested for use at all non-traffic areas at the following locations: 30-E-102: • North side of CDO area – Hand holes for duct bank details 1 and 2 (green areas) • South side of CDO area – Hand holes for duct bank details 16, 17, and 18 (green areas) • Any other location where non-traffic and reduced number of conduits are terminated. 05-E-101: • Hand holes at north side of OHE (overhead electric) within the green area. • Any other location where non-traffic and reduced number of conduits are terminated. 06-E-101: • South side of CDO area – Communications hand hole duct bank detail 3. • Any other location where non-traffic and reduced number of conduits are terminated. Please advise if specified "Quazite" box is acceptable for use at each of the above listed locations.		The contract documents require a 4' wide minimum precast concrete hand holes at all locations, except for the tier 22-rated Quazite Box called out at the Wash Water Holding Tank on drawing 06-E-001. As indicated in email responses and telephone conversations, in order to avoid delaying the installation of the duct bank along the South perimeter fence based on the lead time of the hand holes, the submitted Brooks 3 ½-T PB (10"x17" traffic pull boxes) will be allowed at the West Pasco Site to replace the two communications handholes South of the Citizen Drop Off Area, adjacent to the perimeter fence. Also if desired, at no additional cost to the owner, at the base of the camera poles for 05-FVC-5, 05-FVC-6 and 05-FVC-7. Please submit a credit to the owner for the cost difference in material and labor between the 4' wide precast concrete handhole and the 10"x17" Brooks pull box.			
RFC	CH2M		KOKOLAKI	00027		Recycling Area Push Wall Drainage C		CLO	11/28/2011	11/30/2011	12/9/2011
		Pursuant to initial layout for the new recycling area push wall, it was discovered that the existing elevation rises 9-inches between the north and south edges of concrete pavement for the new push wall as shown within the attached drawing from RFP No. 006. Please advise how the new pavement is to drain properly with this existing condition.					Provide a 4"x4" scupper/weep centered in each bay of the north wall (total of 3). You will need to slope the pavement to these scuppers and slightly separate the vertical wall reinforcing at each scupper to provide the proper 2" clearance.				
RFC	CH2M		KOKOLAKI	00028		WEST CDO Area Storm Piping Between		CLO	11/28/2011	12/9/2011	12/9/2011
		Pursuant to layout of the new CDO area storm piping, which runs directly under the CDO retaining walls, it was discovered that the gap between the top of RCP and the bottom of retaining wall footing will only be 0.2-feet (about 2 ¼"). Please note this condition and advise if any modifications to the retaining wall footing need to be made prior to installation. *The storm pipe has been installed, backfilled, and compacted.					This condition is acceptable. Proceed as designed.				
RFC	CH2M		KOKOLAKI	00029		New Raceway for CCTV Camera at Recy		CLO	11/28/2011	12/16/2011	12/9/2011
		Pursuant to recent issuance of RFP No. 002, it was discovered that a power/data raceway required to feed the CCTV camera proposed at the recycling area would need to cross underneath at least one existing roadway. Note #18 on Sheet 05-E-101 requires all such raceway to be encased in concrete. Please advise if we may propose directional drilling the raceway under necessary roadway crossings. This will eliminate the much larger expense of demolishing roadway to trench and concrete encase.					According to the CCIR, JKC is to compare wired and wireless CCTV connection and provide the lower priced alternative. Please move forward with this approach assuming that road crossings will be concrete encased. Once the routing any wired connections has been determined, direction bores will be evaluated on a case by case basis. The acceptance of directional boring depends on the type of traffic and the depth of the bore.				
RFC	CH2M		KOKOLAKI	00030		Storm Line Conflict with Power Pole		CLO	12/2/2011	12/12/2011	12/9/2011
		Please confirm if it will be acceptable to move both structures S-5A and S-6 about 20 feet to the east due to a conflict with guy wires from WREC's power pole. WREC will shorten the guy wire to the stake where depicted in the picture below to improve the situation (black tape on the stake), but it will not solve the conflict. Both structures are in green space. Inverts will change slightly, but rim elevations and/or grading can be adjusted slightly to compensate for a slightly lower box.					Structure S-5A needs to remain where it is. Structure S-6 can move east 20 feet. The slight change in rim elevation is not a problem.				
RFC	CH2M		KOKOLAKI	00031		WEST-Existing Fiber Optic Line Relo		CLO	12/5/2011	12/22/2011	12/12/2011
		Pursuant to phone discussions with CH2M HILL, please confirm acceptance of the following regarding the existing fiber optic line: It has been confirmed, after conducting OTDR testing, that the existing fiber has been spliced multiple times in the past, which is inhibiting us from removing cable without damaging it. We've therefore proposed the following to CH2M HILL in order to remedy the issue: The existing fiber optic cable can be cut within 6-feet of the existing hand hole along the east fence line, which will allow for enough slack to splice new fiber to the existing, which will then run through the new fiber optic duct bank, bypassing panel 05-FP-7 and terminate at the existing scale house. Please confirm. We are attempting to schedule the fiber transition early this week so we can continue with demolishing the old fiber optic raceway that is located within the intended CDO retaining wall area. *Please note, there will be additional cost for new fiber optic cable between the existing east hand hole and 05-FP-7, as well as cost to field locate, cut, and fusion splice new fiber to the existing fiber within the east hand hole. An NPC will following immediately upon acceptance of this CCIR.					The proposed fiber optic cable splicing and extension to the Scale House is acceptable. An RFP will be prepared for this CCIR.				

Type	To	Request	From	Number	Issue	Title	Answer	Status	Dated	Responded	Required
RFC	CH2M		KOKOLAKI	00032		Cross Brace Conflict with Anchor Bo		CLO	12/7/2011	12/21/2011	12/18/2011
		This pertains to both sites where 8 anchor bolts are detailed. The cross bracing shown in details H and J on drawing 40-S-302 (similar for West) will interfere with the anchor bolts. Two proposed options are: 1. Offset bolts by 3" Raise the work point of the bracing 6"-12" (preferred)						Raise the working point the minimum required to provide access. The bottom of the connection plate can be 2" or slightly less from the base plate to provide access to the top of the bolt.				
RFC	CH2M		KOKOLAKI	00033		Column Bay Spacing at Metal Buildin		CLO	12/8/2011	12/21/2011	12/18/2011
		This pertains to the metal building over each scalehouse. Architectural drawing 20-A-103 shows the dimension between column bays D and A as 55'. Structural drawing 20-S-101 shows the dimensions between these bays as 58' (22' + 14' + 22'). Shop drawings have been developed reflecting the architectural dimensions. Please confirm which governs, the Architectural or Structural.						Use the dimension shown on 20-S-101.				
RFC	CH2M		KOKOLAKI	00034		EAST - Ground Water at Sub-Grade		CLO	12/11/2011	12/12/2011	12/18/2011
		The sub-grade in the picture below shows very wet conditions on the West side of the EAST CDO. Dewatering activities will remove the ground water temporarily for construction, but when the well-point operations are removed water will encroach back into the area and keep the limerock sub-base and underside of the asphalt permanently wet. This appears to be a permanent ground water condition due to Lake Rita. Unless the level of Lake Rita is lowered or finish grades increased, the sub-grade will be permanently wet along the West and South driveways in the CDO. Please advise if the County can substantially lower lake Rita or if the design needs to be revised to account for the ground water level.						Per revised Drawing 06-C-105, a 12" x 12" hole shall be cut at the bottom of the east side of the existing inlet in the swale just south of the CDO. This will lower the water in the swale and the adjacent pavement area. Also, to the west of the CDO, cut a swale with 2:1 side slopes to drain into the mitigated wetland (see same drawing). This will also drain the soil and lower the water in the pavement area. In addition, for the areas of pavement at finished grade elevation 205 and lower (see clouded area on same drawing), replace the 12" limerock base course with 12" of No. 57 stone. Place stone in 6" lifts and compact each lift with 8 overlapping passes using a 5-ton or heavier vibratory roller.				
RFC	CH2M		KOKOLAKI	00034A		EAST - Ground Water at Sub-Grade		CLO	12/20/2011	12/12/2011	12/27/2011
		The sub-grade in the picture below shows very wet conditions on the West side of the EAST CDO. Dewatering activities will remove the ground water temporarily for construction, but when the well-point operations are removed water will encroach back into the area and keep the limerock sub-base and underside of the asphalt permanently wet. This appears to be a permanent ground water condition due to Lake Rita. Unless the level of Lake Rita is lowered or finish grades increased, the sub-grade will be permanently wet along the West and South driveways in the CDO. Please advise if the County can substantially lower lake Rita or if the design needs to be revised to account for the ground water level.						Per revised Drawing 06-C-105, a 12" x 12" hole shall be cut at the bottom of the east side of the existing inlet in the swale just south of the CDO. This will lower the water in the swale and the adjacent pavement area. Also, to the west of the CDO, cut a swale with 2:1 side slopes to drain into the mitigated wetland (see same drawing). This will also drain the soil and lower the water in the pavement area. For the areas of pavement at or lower than finished grade elevation 205 on the south side and 207 on the west side (see clouded area on same drawing), replace the 12" limerock base course with 12" of No. 57 stone. Place stone in 6" lifts and compact each lift with 8 overlapping passes using a 5-ton or heavier vibratory roller. Install underdrain as shown and detailed on attached drawing 06-C-505				
RFC	CH2M		KOKOLAKI	00035		Scale House and Attendant Building		CLO	12/14/2011	12/14/2011	12/21/2011
		Closed Per Contractor					Closed Per Contractor				
RFC	CH2M		KOKOLAKI	00035A		Scale House and Attendant Building		CLO	12/14/2011	1/11/2012	12/23/2011
		Sheet 10-A-201 indicates the new scale house to receive a "stucco finish with elastomeric coating" and the "concrete roof sealed". Section 09 06 00, Exterior Finish Schedule, coincides with the plan notations except the schedule indicates the roof slab is to be "stucco finished with elastomeric coating". As it is not customary to stucco finish a roof slab due to water drainage issues, it was intended that the roof slab have a smooth sloped finish with the specified elastomeric coating. The "stucco finish" indicated for the exterior walls of these buildings will be knock down texture (unless specified otherwise) applied to the precast concrete surface. Please provide the specification by which the "stucco finish" is to be applied, as none is included within the Project Manual. Please advise.						Superseded by CCIR 0035B.				
RFC	CH2M		KOKOLAKI	00035B		Scale House and Attendant Building		CLO	12/21/2011	1/6/2012	1/11/2012
		Pursuant to recent phone discussions, we'd like to offer the following additional clarification and proposal to assist in resolving this issue. See attached.					Tex Cote 300 is not acceptable. See response to Submittal 09 96 52-001.				

Type	To	Request	From	Number	Issue	Title	Answer	Status	Dated	Responded	Required
RFC	CH2M		KOKOLAKI	00036		Existing Scale House Canopy Clarifi		CLO	12/20/2011	1/16/2012	12/27/2011

Pursuant to the recent submittal of the existing scale house canopy shop drawings (Submittal No. 13 34 19.002, transmitted 12/13/11), our office would like to request the following clarifications. Photographs attached for further clarification:

1. Sheet 50-A-102 indicates a new SSMRS canopy for the existing scale house area. The stipulations noted require a design roof live load of 20psf. To achieve this loading requirement, the required coverage area necessitated by the Contract Drawings, as well as code requirements, the canopy will require four (4) structural support columns and supporting foundations, which the Contract Documents do not incorporate or imply the use of. Based on the design calculations submitted within the above referenced submittal package, please furnish a detail by which these foundations are to be constructed. This cost is unanticipated, which we request additional compensation to implement.

2. The design of this structure, furnished by the basis-of-design manufacturer, Ceco Building Systems, accounts for the area of coverage indicated on Sheet 50-A-102. However, to properly incorporate this area of coverage, the above mentioned supporting columns appear to impact existing conditions. It is anticipated that the northeast column will impact underground utilities passing under the intended footprint of the column. It is also anticipated that the northeast column will impact the parking area. Additionally, the two southern columns supporting the canopy may possibly impact the required footprint of the concrete patio area. Please advise regarding the manipulation of these columns which may be required to lessen the impact to these possible obstructions.

3. Note 4 on Sheet 50-A-102 indicates to "close all openings between scale house roof and canopy roof". Per the illustrated outline of this canopy identified on this sheet, and the gable roof of the existing scale house, it is assumed this "closure" is to prevent rainwater from cascading down the scale house roof and onto the new concrete patio below. Please note that the noted "closure" of the roof, in conjunction with the required canopy design will not be practical for the purpose it is to serve and was not incorporated into Ceco Building System's design shop drawings. It is suggested that the canopy roof extend beyond the ridge of the scale house roof so as to keep rainwater from cascading onto the concrete patio below. This may eliminate the possible column footing obstructions noted above. If the extension is not acceptable, it is suggested that a basic gutter system be installed along the south eave of the existing scale house in order to collect rainwater.

Considering the above as well as the submitted shop drawing package specific to this canopy, please advise how we are to mitigate these possible issues without increasing the size, duration, and scope necessary to construct it.

This CCIR has been the subject of several discussions between the Contractor, Engineer, and the County. CCIR 036 is hereby closed pending submittal of additional options by the Contractor.

Type	To	Request	From	Number	Issue	Title	Answer	Status	Dated	Responded	Required
RFC	CH2M		KOKOLAKI	00036A		Existing Scale House Canopy Clarifi		CLO	2/29/2012	1/16/2012	3/7/2012

Pursuant to the recent submittal of the existing scale house canopy shop drawings (Submittal No. 13 34 19.002, transmitted 12/13/11), our office would like to request the following clarifications. Photographs attached for further clarification:

1. Sheet 50-A-102 indicates a new SSMRS canopy for the existing scale house area. The stipulations noted require a design roof live load of 20psf. To achieve this loading requirement, the required coverage area necessitated by the Contract Drawings, as well as code requirements, the canopy will require four (4) structural support columns and supporting foundations, which the Contract Documents do not incorporate or imply the use of. Based on the design calculations submitted within the above referenced submittal package, please furnish a detail by which these foundations are to be constructed. This cost is unanticipated, which we request additional compensation to implement.

2. The design of this structure, furnished by the basis-of-design manufacturer, Ceco Building Systems, accounts for the area of coverage indicated on Sheet 50-A-102. However, to properly incorporate this area of coverage, the above mentioned supporting columns appear to impact existing conditions. It is anticipated that the northeast column will impact underground utilities passing under the intended footprint of the column. It is also anticipated that the northeast column will impact the parking area. Additionally, the two southern columns supporting the canopy may possibly impact the required footprint of the concrete patio area. Please advise regarding the manipulation of these columns which may be required to lessen the impact to these possible obstructions.

3. Note 4 on Sheet 50-A-102 indicates to "close all openings between scale house roof and canopy roof". Per the illustrated outline of this canopy identified on this sheet, and the gable roof of the existing scale house, it is assumed this "closure" is to prevent rainwater from cascading down the scale house roof and onto the new concrete patio below. Please note that the noted "closure" of the roof, in conjunction with the required canopy design will not be practical for the purpose it is to serve and was not incorporated into Ceco Building System's design shop drawings. It is suggested that the canopy roof extend beyond the ridge of the scale house roof so as to keep rainwater from cascading onto the concrete patio below. This may eliminate the possible column footing obstructions noted above. If the extension is not acceptable, it is suggested that a basic gutter system be installed along the south eave of the existing scale house in order to collect rainwater.

Considering the above as well as the submitted shop drawing package specific to this canopy, please advise how we are to mitigate these possible issues without increasing the size, duration, and scope necessary to construct it.

"JKC to provide sketch"

Detail worked out with owner during progress meeting

Type	To	Request	From	Number	Issue	Title	Answer	Status	Dated	Responded	Required
RFC	CH2M		KOKOLAKI	00037		Spare Duct Bank Conduit (CE1)		CLO	12/20/2011	12/16/2011	12/27/2011

Sheet 30-E-102 – for example – indicates duct bank cut sections that can be cross-referenced on Sheet 30-E-301. Some of the sections include spare conduits designated "CE1". Note #6 on this sheet stipulates to "install empty conduit for power between hand holes or between camera field panels". Please advise which system this spare conduit is required for; electrical or CCTV/Communications. A prompt response is appreciated as duct bank raceway is currently being installed.

For electrical power as indicated in Note 6.

Type	To	Request	From	Number	Issue	Title	Answer	Status	Dated	Responded	Required
RFC	CH2M		KOKOLAKI	00038		PEMB Canopy Anchor Bolts		CLO	12/20/2011	12/16/2011	12/27/2011

Detail 1/10-S-101 identifies the PEMB canopy anchor bolts as ¾"x2'-0", which are further described to be a stud type. The recently submitted PEMB canopy submittal package does stipulate the quantity, diameter, and material type to be used with the manufacturer's engineered system, however they will not stipulate the length or type of anchor to be used. Please advise if a ¾" x 2'-0" studded threaded rod, complying with ASTM F1554 Grade 36 is acceptable for use with the application described.

These types and lengths of anchors are acceptable.

Type	To	Request	From	Number	Issue	Title	Answer	Status	Dated	Responded	Required
RFC	CH2M		KOKOLAKI	00039		New Concrete Patio at Existing Scal		CLO	12/19/2011	1/13/2012	12/29/2011
		Sheet 50-A-102 indicates and notes a new concrete patio, ramp, and stair and landing that is to be constructed around the existing scale house building. It is our intent to utilize the following design in constructing these features of work: •□Either 8" CMU or CIP stem wall construction with a 3000psi 4" slab on grade with welded wire fabric. No vapor barrier or termite treatment will be incorporated. Considering the above, please provide clarification to the following: 1. See attached shop drawing from the rebar fabricated. Please advise on all that is requested. Specifically, minimum stem wall and supporting footing reinforcing requirements. 2. As the elevated structural slab method is not being pursued, please confirm that the stipulation for 100psf live load does not apply.					1. Regarding the termite treatment comment: "Per Florida Building Code Section 1816:Termite Treatment is to be provided as preventative treatment is required for new construction." The method of treatment is to be selected by GC but in compliance to options as stated in 1816.1.1 through 1816.1.7. 2. No vapor retarder is required since concrete will receive no finish treatment. 3. See the attached sketch showing stem wall and slab construction at patio. Elevations need to be field verified by Contractor. Ramp design shall be similar with a 24" wide spread footing under all required CMU retaining walls. Stair information provided in Submittal 05 52 00-001 Metal Railings appeared to be acceptable, but final acceptance is pending re-submittal. 4. The 100 psf live load applies.				
RFC	CH2M		KOKOLAKI	00040		EAST – Slow Dewatering		CLO	12/20/2011	12/21/2011	1/4/2012
		The East site is experiencing slow dewatering. The soil is not percolating as quickly as expected. Please confirm that we can over-excavate footings and backfill with stone. From previous discussions with CH2MHIII, 12" of #57 stone will be acceptable. As crushed concrete is more readily available, please confirm if crushed concrete can be used in lieu of #57 stone.					Yes, crushed concrete with the same gradation as #57 stone is acceptable. The crushed concrete shall be sure proof-rolled with at least 5 overlapping passes using a plate vibratory compactor.				
RFC	CH2M		KOKOLAKI	00041		EAST – Storm Pipe Conflict with Foo		CLO	12/28/2011	12/21/2011	1/4/2012
		On the EAST site, the storm pipe between structures S-3 and S-4 runs directly through the footing for the retaining wall. See photo below. From previous discussions with CH2MHIII, please confirm to step the footing above the pipe and extend the step 4' on either side of the pipe using Standard Detail 0330-040 for the footing.					That is correct. Maintain 2-3 inches between the top of the pipe and the bottom of the footer.				
RFC	CH2M		KOKOLAKI	00042		EAST – Sanitary vs. Tree		CLO	12/28/2011	12/22/2011	1/4/2012
		On the East site, the sanitary line comes very close to a tree (near storm structure S-5A). Please confirm if it is possible to jog the sanitary about 5' away from the storm line (already installed) to get away from the root system of the tree. A 10' separation between the storm and sanitary lines will be maintained otherwise. The sanitary runs will be straight with cleanouts at changes in direction. Additional fittings will be incorporated as needed.					Yes, that is acceptable.				
RFC	CH2M		KOKOLAKI	00043		Attendant Building Foundation Clari		CLO	12/28/2011	12/23/2011	1/4/2012
		Upon further review of the Contract Documents, it is apparent that no foundation plan exists for the attendant building for the west project site. Please specify the foundation type required to support this building. Also, both east and west attendant buildings consist of a veranda, which requires that the precast panels offset from the structural bearing area of the slab over the grade beams and onto the 6-inch slab-on-grade (see 30-A-101 for reference). Should there be a thickened edge along the footprint of these wall sections to support these sections of panels that jut onto the slab-on-grade? If so, specify detailed requirements. An immediate response is requested.					The foundation detailed for the East Project or an integral slab/foundation by the building manufacturer set on the same 12" thick proof rolled foundation bed is acceptable. A thickened slab equal to the perimeter grade beam should be placed under all bearing walls.				
RFC	CH2M		KOKOLAKI	00044		Existing Scale House Metal Railing		CLO	12/22/2011	12/22/2011	1/3/2012
		Pursuant to the recently received comments to Submittal No. 05 52 00.001, please advise with the following additional clarification: •A/E comment #3 states to provide guardrail around the entire perimeter of the new concrete patio of the existing scale house. Please note there are no stipulations for the contractor to provide handrail/guardrail at this location. Notes 1 and 4 on Sheet 50-A-102 stipulate to provide "aluminum guardrail and handrail" at both the new concrete stair and landing at the north side of the building and for the new concrete handicapped ramp leading up to the new concrete patio. If aluminum guardrail/handrail is desired around the perimeter of the patio, we'll submit a proposal for the cost required to implement the modification. Otherwise, it is assumed that responsibility of providing railing around the patio area is by others.					See revised response to Submittal No. 05 52 00.001. New Construction Note No. 1 on Drawing 50-A-102 states "All design and construction to be per Florida Building Code 2007 and other applicable local building codes."				

Type	To	Request	From	Number	Issue	Title	Answer	Status	Dated	Responded	Required
RFC	CH2M		KOKOLAKI	00045		Leachate Tank Options		CLO	12/28/2011	1/6/2012	1/4/2012
		Please review the attached letter from Equipment Technologies to Mr. Henry Postrozny regarding a dead-man option to anchor the tank as well as clarifications at the valve vault. Highland Tank engineers have reviewed the letter and calculations and have agreed with the recommendations.					Responses to your CCIR No. 045 and attached letter from Equipment Technologies Corp. dated December 27, 2011 are as follows: 1. Leachate Tank The "dead man" approach to restraining the underground storage tank is acceptable with the following provisos: a) Tank manufacturer (Highland Tank Corp.) to provide signed and sealed calculations as a "Quality Control" submittal in accordance with Section 01300, paragraph 1.04. [Note: "The Disclaimer" notification shall not appear on the submittal.] b) Metal components of the strapping mechanism used to secure the tank to the "dead man" shall be Type 304 Stainless Steel minimum. 2. Valve Vault: Responses to questions related to the FRP valve vault are provided below: a) Vault shape: A circular vault in lieu of a rectangular vault is acceptable. b) Discharge pipe size: Increasing piping to 3 inches normal diameter is acceptable. c) Threaded connections: Threaded connections are acceptable. To provide a place to field disassemble pipe in the future for valve maintenance/replacement, provide a 3-inch NPT threaded coupling adjacent to the isolation and check valve. d) Drain line connection: A 3- inch drain set connection is acceptable.				
RFC	CH2M		KOKOLAKI	00046		Weld Clarification and Slip Critica		CLO	1/4/2012	1/3/2012	1/11/2012
		1. Are slip critical bolts/connection required at details 1 & 2 on drawings 40-S-302? 2. Please confirm what the ¼" fillet weld (all around) is for at detail 1 on S-40-302.					1. Slip critical bolts are only required at detail 1 on drawings 40-S-302. Detail 2 on 40-S-302 should have long slotted holes in top flange of the lower beam being hung with the 4-3/4" bolts. Bolts at all slotted holes should have double nuts. 2. The intent is to weld the top bearing plate over columns with a ¼" fillet weld all around and then bolt the beam to the bearing plate with slip critical bolts as shown.				
RFC	CH2M		KOKOLAKI	00047		Scale House Electrical Rough-In		CLO	2/1/2012	1/24/2012	2/8/2012
		!! See attached conduit layout details provided by the Electrical Subcontractor. Please note that all conduit penetrations (59 total at panel, 36 total at workstations) must rise within the grade beam to ensure they stub up at the correct locations in relation to surrounding construction. Please advise if the conduits can penetrate and rise within the grade beams as illustrated. If so, please advise of any necessary structural modifications to the grade beams in order to accomplish this. A conference call will be scheduled for today, 1/9/12, at 2:00pm to discuss an immediate clarification to this issue so as not to further impact forward progress of construction.					In accordance with our conference call last week, the grade beam may need to be widened to provide a minimum width of 12" from the inside face of conduit and 3" minimum cover on the other side. The reinforcing can stay as originally detailed and all conduit shall be placed at least 1" from any reinforcing bars. An alternate approach is to increase the depth of the conduit so that the sweeps do not penetrate the grade beam.				
RFC	CH2M		KOKOLAKI	00048		Differing Fence Details		CLO	1/18/2012	1/23/2012	1/31/2012
		On the East site, new chain link fencing is detailed to tie into existing chain link fence along the West perimeter. See sketch below. The existing fence does not have a top rail or 3-lined barbed wire as the new fence does and will not match. Please advise if anything needs to be done so all fence details match.					Nothing needs to be done. Construct the new fence as specified. The fences will not match.				
RFC	CH2M		KOKOLAKI	00049		Outside Air Intake vs. Condensing U		CLO	1/26/2012	1/27/2012	2/8/2012
		The outside-air intake at each scalehouse resides directly above the outside condensing unit of the split system per 20-M-101. From our discussion with CH2MHIII engineering, the condition of warm air from the condensing unit being introduced at the intake to the building should not exist. The only solution recommended at this point would be to find an alternate location of the condensing unit, as the scalehouse structures and louver openings have already been fabricated. Please note, this issue was specifically identified on the fabricated structure shop drawings prior to fabrication. Please provide recommendations.					CH2MHILL agree with the relocation of the condensing unit due to the proximity of it to the OSA intake louver. The condensing unit shall be relocated complying with the related installation specifications and not less than 10 ft from the OSA intake louver mentioned or any other air intake.				

Type	To	Request From	Number	Issue	Title	Answer	Status	Dated	Responded	Required
RFC	CH2M	KOKOLAKI	00049A		Outside Air Intake vs. Condensing U		CLO	2/15/2012	2/15/2012	2/22/2012

The outside-air intake at each scalehouse resides directly above the outside condensing unit of the split system per 20-M-101. From our discussion with CH2MHIII engineering, the condition of warm air from the condensing unit being introduced at the intake to the building should not exist.

The only solution recommended at this point would be to find an alternate location of the condensing unit, as the scalehouse structures and louver openings have already been fabricated. Please note, this issue was specifically identified on the fabricated structure shop drawings prior to fabrication. Please provide recommendations.

02/06/12: PLEASE CONFIRM IF THE PROPOSED LOCATION ON THE ATTACHED SKETCH WILL BE ACCEPTABLE.

The proposed location is acceptable on the condition the unit is on a platform so that the unit will be at the same elevation of the scale in order to provide adequate air flow.

Type	To	Request From	Number	Issue	Title	Answer	Status	Dated	Responded	Required
RFC	CH2M	KOKOLAKI	00050		Corrosion Protection for Outside Co		CLO	2/1/2012	1/31/2012	2/8/2012

Spec section 238100.2.07 for the split system outdoor units calls for a factory dipped corrosion protection on the condenser coil. The manufacturer states that these residential type coils come painted (for aesthetic reasons) and the dipped coating will not adhere to the painted coil. There are no exceptions for these size units.

However, the manufacturer recommends the enclosed corrosion products that are sprayed on in the factory by certified technicians. This product exceeds a 10, 000-hour salt spray test (compared to 3,000-hr per paragraph 2.07.D) and would have a 5-year coil warranty (compared to 1-year general per spec.). See product information and test report below.

The manufacture's sales engineer and product representative state that the procedures and QC protocol for the spray technique will ensure complete and thorough coverage, which they commonly perform with great results. Their contact information is provided below to verify and/or clarify.

Dennis Earley, LEED®AP - Senior Sales Engineer - Carrier Enterprise
Office: 813-242-7747, Mobile: 727-423-1189 -
Dennis.earley@carrierenterprise.com

Malia Powers - Luvata Electrofin Florida
Office: 813-689-4282, Mobile: 813-220-1255 - malia.powers@luvata.com;

Due to the small size of the condensing unit and the characteristic of the environment where it will be located. We agree with using spray coating instead of dip-applied coating.
Spray coating is more successful when performed under controlled conditions such as in the coating facility.
The coating procedure shall be executed in the factory or other controlled environment, not in the field.

Type	To	Request From	Number	Issue	Title	Answer	Status	Dated	Responded	Required
RFC	CH2M	KOKOLAKI	00051		Fire Line by Wash Tank		CLO	1/30/2012	2/20/2012	2/8/2012

Please refer to the sketch below from drawing 06-C-107 showing the section of 8" W1 fire line to be removed. Please confirm that the existing fire line serving the transfer station is not connected to this section of pipe.

A fire suppression system appears within the transfer station, but no fire line to the building is shown on any as-builts.

If the existing 8" W1 line, or a portion of it, needs to remain because the transfer building fire line is found to connect to it, please incorporate this condition into a sketch for the underground detailing per 06-C-107 and confirm that it will not conflict with the new tank or any of its components. Also, confirm if the fire suppression system at the transfer building needs to remain active if re-routing and shut down is needed.

As shown on the Record Drawings from the County, the fire suppression system from the existing transfer station building ties into the existing fire hydrant that was proposed to be demolished on the contract documents. Keep the existing 8" W1 and existing fire hydrant that was to be demolished. Field locate the tank and provide record drawings of location upon completion.
See Attachment of Revised Drawing 06-C-107.

Type	To	Request From	Number	Issue	Title	Answer	Status	Dated	Responded	Required
RFC	CH2M	KOKOLAKI	00052		Factory-Mounted Panelboard at Gene		CLO	2/1/2012	2/1/2012	2/8/2012

The above referenced specification section (32 31 13, 2.11A(17)) requires a factory-mounted panelboard within the generator enclosure. However, the basis-of-design manufacturer, Cummins, does not provide a factory-mounted panelboard as part of their package, and will not supply one. Furthermore, there may be an issue with having enough space to mount the panelboard within the enclosure.

Please advise/confirm whether the factory-mounted panelboard is even required. If so, provide detail on how we are to incorporate this requirement.

The intent of the specification section is to have a custom enclosure with the panelboard mounted inside provided with the generator. JRS Custom Fabrication Inc. typically provides custom generator enclosures that meet all enclosure requirements of the specification, including the panelboard, and is available as an option through Cummins. Either provide the panelboard inside the generator enclosure as specified or provide all the addition conduit, wire and circuit breakers required to connect the generator mounted equipment to the Scalehouse lighting panels at no addition cost to the Owner.
Please note any additional required conduits shall be installed underground, including the concrete slab, to the lighting panel.

Type	To	Request From	Number	Issue	Title	Answer	Status	Dated	Responded	Required
RFC	CH2M	KOKOLAKI	00053		Conduit Sleeve CDO Retaining Wall		CLO	2/1/2012	2/2/2012	2/8/2012

Pursuant to discussions with the EOR, please advise if we may use PVC sleeves within the CDO retaining walls for the underground electrical raceways, which feed the compactor disconnects as shown on within the "Stationary Compactor Disconnect Switch Mounting Detail" provided on the above referenced plan sheet (30-E-601). The sleeves will be necessary as the concrete formwork is of the pre-engineered variety and stub-outs are not a viable option with this type of forming system.

It will be acceptable to use PVC sleeves to install the conduits for the disconnect switch, instead of installing the conduits cast-in-place. The conduits are still required to be PVC coated aluminum, and grouted once they are installed.
Please note that all other conduits (including the conduits for lighting) are required to be installed cast-in-place.

Type	To	Request	From	Number	Issue	Title	Answer	Status	Dated	Responded	Required
RFC	CH2M		KOKOLAKI	00054		EMT Conduit Application		CLO	2/1/2012	2/6/2012	2/8/2012
		Per the above referenced specification section article (26 05 33, 3.04D(2)), EMT conduit is acceptable for use within administrative areas so long as it's concealed. Please be advised that EMT conduit will be utilized within both the scale house and attendant building for all raceway applications which will be concealed within walls or above the ceiling. Please confirm our interpretation of this specification prior to installation so as to mitigate any further misconceptions regarding the proper use of electrical raceway as specified for this project.					Correct, EMT conduits are acceptable for use in interior concealed locations of administrative areas (Scalehouse and attendant building) per specification 26 05 33 3.04.				
RFC	CH2M		KOKOLAKI	00055		Precondition at Existing Fire Line		CLO	2/1/2012	2/9/2012	2/8/2012
		Upon opening the valve on the fire hydrant near the entrance to the existing scalehouse parking area, a sputtering and hammer condition existed. The valve was opened several times and was allowed to flow full-open, which the condition continued splitting mostly water, but a lot of air. Michelle Krawczyk (CH2MHill) witnessed the flow on site. Please review the condition and confirm if anything needs to be done before the new fire line is tapped onto the existing system.					Pasco County confirmed that this is an on demand system. Pasco County Utility Department checked the system says that the system is in good working order.				
RFC	CH2M		KOKOLAKI	00056		DAT and RFID Reader Support and Lo		CLO	2/5/2012	2/21/2012	2/15/2012
		Pursuant to the truck scale/PC Scale coordination meeting conducted on 2/2/12, some clarifications regarding the DAT and RFID reader support structure and locations are being requested in order to properly implement the required DAT and RFID reader assemblies. Please advise with clarification to the attached.					The location of the DAT reader should be 8'-0" from the front edge of the scale to the centerline of the DAT. The location of the RFID reader should be 27'-0" from the front edge of the scale to the centerline of the RFID reader. See attached redline showing the locations. Equipment stand material shall be aluminum. The typical height of the DAT is to be 76.5" from the Centerline of the box to the top of scale deck. See note regarding DAT post connection on attached redline.				
RFC	CH2M		KOKOLAKI	00057		Workstation Computer Requirements		CLO	2/5/2012	3/2/2012	2/15/2012
		Pursuant to the truck scale/PC Scale coordination meeting conducted on 2/2/12, it was conveyed that the owner furnished workstation computers and printer specifications would be provided for JKC purchase and implementation. Please furnish this data at your earliest convenience.					The response is in RFP 21.				
RFC	CH2M		KOKOLAKI	00058		Workstation Casework Modifications		CLO	2/5/2012	3/13/2012	2/15/2012
		Pursuant to discussions between the project team, it is the owner's intention to modify the scale house workstation casework to include a concealed wireway, wall-mounted monitor stands, etc.; modifications that our require coordination prior to fabrication. Please advise with confirmation of discussed modifications to the casework and provide revised details as soon as possible. Due to schedule constraints, we'd like to implement these modifications into the submittal shop drawings to expedite the process.					Refer to the attached Millwork Memo, Revised Project Drawings, and Cut Sheets attached.				
RFC	CH2M		KOKOLAKI	00059		Stud Framing Modifications		CLO	2/8/2012	2/15/2012	2/15/2012
		Pursuant to discussions, please confirm that it is acceptable to use 6" stud framing at the attached highlighted locations. • The bathroom plumbing wall contains a 4" sanitary that a 3 5/8" wall not accommodate. The interior dimension of the bathroom will remain the same. • Also, the highlighted IT room wall contains numerous electrical conduits, which after fully bypassing the grade beam below, had to be stubbed up from the floor away from the face of wall to a greater extent than anticipated. By building this wall out with 6" studs, it will allow the conduits to rise directly into the bottom of the panelboards and phone terminal boxes without having to sweep the conduit into their termination points. Please confirm this will be acceptable. Typical for the east site scale house.					Approval is given for using 6" studs for the two walls locations discussed above.				

Type	To	Request	From	Number	Issue	Title	Answer	Status	Dated	Responded	Required
RFC	CH2M		KOKOLAKI	00060		CCTV Equipment Model Discontinuatio		CLO	2/8/2012	2/6/2012	2/15/2012

Please see below and attached itemized list and attached supported data for corrected manufacturer's products. The following equipment model numbers have been discontinued and have been replaced by the adjacent model number (supporting data attached).

Requested Part #□New or Correct Part #
DB24C42R2 □ DHR-753-16B200
REGL1812x□REGL1-816XE
KBN495V2N□KBN-498V28-20
LTC063021□LTC 0630/21
VG4-324-ECP□VG5-624-ECS
VG4-524-ECSP□VG5-624-ECS
VG5's□VG4-A-9543
BDS308DS□UFLED30-8BD

Please advise as soon as possible.

These products are products of the basis of design manufacturer but detailed part numbers will not be reviewed at this time, the detailed model numbers will be reviewed as part of the complete CCTV submittal in accordance with Section 01300, Submittals and Section 28 23 13, Closed Circuit Television System. The original products specified were based on the manufacturer's current products at the time of design and it is understood that these part numbers may have changed. CCTV products will be reviewed in accordance with the product specifications and new model part numbers will be acceptable provided they meet the specifications.

Type	To	Request	From	Number	Issue	Title	Answer	Status	Dated	Responded	Required
RFC	CH2M		KOKOLAKI	00061		Electric Handhole Elevation Clarifi		CLO	2/5/2012	2/15/2012	2/15/2012

Per above noted specification section, the EOR's written acceptance is required for all electric hand holes at concrete pavement prior to installation. Please advise how each box is to be installed in relation to the slope of the concrete pavement; flush with the contours of the pavement, or level.

Installed flush with the contours of the pavement.

Type	To	Request	From	Number	Issue	Title	Answer	Status	Dated	Responded	Required
RFC	CH2M		KOKOLAKI	00062		Conflict Between Existing and New W		CLO	2/6/2012	2/15/2012	2/15/2012

After some investigative excavation, it was found that the orientation of the existing tank is not located where implied on drawing 06-C-107. The existing tank is very close to the location of the new tank, less than 5 feet. The area is too tight to relocate the new tank Southwards.

There would be a high risk of disturbing the new tank when the overburden and existing tank is removed directly adjacent to it.

Since the existing 6" drain serving the existing tank needs to be relocated before the new tank can be installed anyway, we would like to confirm if Pasco County would let us remove the existing tank first and place a temporary tank to collect the floor drain wash water. The tank would be partially buried further away from the new tank at an elevation that would allow drains to flow. The tank could be emptied by vacuum truck.

Use of a temporary tank is acceptable providing that the following conditions are met:
•Ensure that the County tanker with a pump motor will be able to access the temporary tank with a semi/tanker truck to periodically remove leachate from the tank. County does not have a vacuum truck available in their fleet.
•Storage capacity of the tank is below the invert of the tank inlet.
•Plumbing and cam lock connections to the tank are to be provided.
•No additional costs are accrued for the County for this method.

Type	To	Request	From	Number	Issue	Title	Answer	Status	Dated	Responded	Required
RFC	CH2M		KOKOLAKI	00063		Alternate Pass-Through Window to Me		CLO	2/7/2012	2/7/2012	2/15/2012

The "Ready-Access" pass-through window specified in 08 51 13 paragraph 2.02 does not have a Miami-Dade approval to connect to aluminum. The available NOAs show connection to wood, stud framing, concrete, and steel only.

Two options are proposed:
1.□Incorporate tube steel (or stud framing) in the rough opening between the sill and header which the "Ready Access" window can attach and wrap with break-metal or
2.□Staying with the intent of the overall look, use the "Quick-Serve" pass-through window, which has been Miami-Dade tested to connect to aluminum. The "Quick Serve" is comparable quality. The service opening is 4" wider, but 3" lower than the "Ready Access". See attached product information.

Approve #2-approach. Please provide an official submittal showing the installation assembly that you will be using and product information as required by Section 08 51 13 of specifications.

Type	To	Request	From	Number	Issue	Title	Answer	Status	Dated	Responded	Required
RFC	CH2M		KOKOLAKI	00064		Custom Millwork Vs. Unit Kitchen		CLO	2/10/2012	2/10/2012	2/22/2012

Specification 11 26 00 calls for a unit kitchen as manufactured by Dwyer Products. As the kitchen is comprised of only two upper cabinets and one lower cabinet, please confirm if it would be acceptable to fabricate the kitchen as custom millwork in accordance with 064000 "Architectural Millwork" so as to match the work area millwork.

The Dwyer unit kitchen products (thermofoil doors, MDF and particle board construction, etc) would be lesser quality than the custom millwork pieces fabricated under AWI quality standards. There would be no upcharge for this change. The appliance specifications would be unchanged. Plumbing fixtures to adhere to the plumbing drawings and specifications. LEED reporting will not be provided (112600, paragraph 1.05.4)

Please confirm quickly as shop drawings need to be developed. Please also forward any millwork modifications (CCIR 058) that need to be incorporated into shops.

Specification will stand as written. Kitchen will remain as one custom unit as specified (Dwyer Signature Series 96" wide). General Contractor is responsible to work with Dwyer for accurate confirmation of existing dimensions including accurate location of window placement with trim for shop drawings.
Finish color selection to be sent for approval with full submittal.
Understand that unit provided by Dwyer puts warranty under one umbrella.

Type	To	Request	From	Number	Issue	Title	Answer	Status	Dated	Responded	Required
RFC	CH2M		KOKOLAKI	00065		Attendant Building Power Service Fe		CLO	2/13/2012	2/14/2012	2/22/2012
		The West Pasco CDO Power Riser Diagram on Sheet 30-E-601 indicates a (400S3) power service feeder to the attendant building. Per the Power Circuit Schedule on Sheet 00-G-008, this feeder size is to be 3#500 and a #1/0G within a 3" raceway. However, the panel board schedule for Panel 30-PP-1 specifies 4#500 and a #3G within a 4" raceway. Please note that a 3" feeder conduit has been installed in accordance with the Power Circuit Schedule, and that the specified 3#500 and a #1/0G is anticipated. Please confirm. Also, there doesn't appear to be a neutral wire indicated for any of the single phase circuits at the attendant building panelboards on both sites. The above clarifications apply to the east site as well (40-E-601).						400S3 (3"C, 3#500MCM, 1#1/0G) is correct. The #1/0 is the grounded service conductor (Neutral) and is required to be bonded to the grounding electrode inside the panel. Please refer to 30-E-104 & 40-E-104 for the grounding electrode requirements.				
RFC	CH2M		KOKOLAKI	00066		Concrete to Existing Pavement Trans		CLO	2/21/2012	2/23/2012	2/29/2012
		Please confirm that the circled details on the attached sketch from Drawing 06- C-503 should actually be 3213-250, not 3212-215 (new asphalt to existing asphalt). Detail 3213-250 (new concrete to existing asphalt transition) shows a 10' overlap of asphalt over concrete. Please confirm that the transition (where it's visible on the surface) can be located where indicated on the sketch. This will result in a condition of existing asphalt transitioning to new asphalt for 10 feet, then transitioning to new concrete pavement, which will keep the travel lanes open during installations.						That is not correct. The intended detail is called out (3212-215). The planned connection would consist of sawcutting two feet of the existing asphalt and then placing the new concrete pavement up to the sawcut. If the existing base material is too thin (less than 6" below bottom of new concrete) then it will have to be rebuilt to the required thickness for concrete pavement. If JKC prefers to use detail 3213-250 as noted above, they are welcome to. However, the existing pavement should also be sawcut back a minimum of two feet to provide a need connection.				
RFC	CH2M		KOKOLAKI	00066A		Concrete to Existing Pavement Tran		CLO	3/13/2012	3/21/2012	3/21/2012
		To further expound on the preceding CCIR No. 066, it has come to our attention that the above referenced drawing details indicate that the buried slab transition from 6" to 3" thick over a width of 10-feet. Considering that the concrete pavement is specified to be 8" thick (per Detail 3213-240), this would imply that the asphalt pavement is 5" before it even begins the transition over the buried concrete slab. However, asphalt pavement is only 2.5" thick (per Detail 3212-210). Please advise if the transition distance should be shorter to compensate for the asphalt pavement thickness, or eliminate this special condition completely and pave both surface types to directly abut each other.						The transition distance is to remain 10 ft. Eliminate the tapper in the concrete and use a constant 5 ½" concrete thickness below the asphalt. Ensure that the connection is properly sealed. This transition procedure is only applicable to new asphalt to new concrete transitions. Seal as indicated in the contract documents. The CCIR 066 response is still applicable to new concrete to existing asphalt condition.				
RFC	CH2M		KOKOLAKI	00067		WEST Attendant Building Garage Fini		CLO	2/22/2012	2/21/2012	2/29/2012
		Sheet 30-A-101 provides a reflected ceiling plan for the WEST attendant building. This plan does not specify an ACT ceiling in the garage (30-101). However, the finish schedule (09 06 00) does specify an ACT ceiling at this location. Due to this conflict of specification, we reasonably assumed that the reflected ceiling plan accurately identified the condition desired for this location. Furthermore, on the finish schedule, the floor is noted to have a concrete sealer but the color is noted as 'F-1', which is a VCT tile color. This room is also noted to have resilient rubber base. Please note that this garage is unconditioned, and is anticipated to function just as the room title suggests. We do not recommend an ACT ceiling or rubber base at this space. Please advise.						VCT floor, rubber base and ACT ceiling are not to be installed in the garage area of the Attendant Building.				

Type	To	Request	From	Number	Issue	Title	Answer	Status	Dated	Responded	Required
RFC	CH2M		KOKOLAKI	00068		CT Meter Type Installation		CLO	2/23/2012	3/5/2012	3/6/2012

Sheet 10-E-601 illustrates the power service riser diagram for our project. This diagram requires that the secondary feeders from the pad-mounted transformer be run directly to the meter box mounted on the wall outside the buildings. The utility company however (WREC) requires that their CT meter assembly be installed in lieu of the conventional meter assembly, which they are trying to phase out.

The reason for the CT meter assembly is to allow the utility company to service the meter without terminating power to the customer. The conventional method for servicing the meter took approximately 4-hours, which required the customer to be without power for the same timeframe. With the CT meter, WREC can disconnect power to the meter and bypass it to maintain uninterrupted service to the customer. This is made possible by the below mounted CT meter disconnect box. However, this CT meter configuration will require a 6x6 precast mounting post for which to mount their assembly. The reason for this is because the CT cable, which services the CT meter from the pad-mounted transformer, cannot be any longer than 25-feet in length. This is dictated by the minimum allowable loss in load for the assembly to still function as required.

Pursuant to discussion with WREC, there are two options to consider once the power service makes its way to the building from the CT meter. The intended meter box to be mounted on the buildings can be made into a disconnect switch, or the power service can bypass this location and terminate directly into the ATS.

See attached diagrammatic illustration of the CT meter assembly. Please advise which option we should pursue.

Route the conduit and conductors directly from the meter CT cabinet to the service entrance rated automatic transfer switch.

RFC	CH2M		KOKOLAKI	00069		Clarification for Unit Cabinet Spe		CLO	2/27/2012	2/28/2012	3/6/2012

Please clarify the finish for the unit kitchen cabinets. Finish schedule in section 090600 states for the "base and upper cabinets in the breakroom" to have a laminate finish of "Batik Mat". Specification 11 26 00 states for the unit kitchen cabinets to be steel case with thermofoil doors. None of the standard colors for the specified unit kitchen (Dwyer Products) are "Batik Mat".

Please see attached color selection and provide colors for the steel case and for the thermofoil doors per standard color chart from Dwyer products. Also, please let us know if there will be any variation from the contract docs for these cabinets, so no unnecessary efforts are spent generating submittals. There is still a very long lead time for the Dwyer product (despite the response to CCIR 064 "Unit kitchen vs Custom Millwork") so obtaining color selections will hold our place in line at Dwyer.

We assume the laminate color per finish schedule for the counter top in the "Breakroom" area is still "Breeze Solidz".

Style of door 4 sided bevel.
The finishes for the Dwyer unit are clarified as:
- Steel Cabinet bodies : Bisque
- Thermofoil doors and exposed side panels :PORTO
- Countertop and Backsplash: Formica 3507- 58 Batik Mat or #7740-58 Buffed Aluminum

Submit shop drawings including samples of finishes.

RFC	CH2M		KOKOLAKI	00070		CCTV Camera Poles		CLO	3/2/2012	3/2/2012	3/20/2012

Article 3.03B within the above referenced specification section states that camera poles are specified in Division 26, and further implies that CCTV cameras are to be installed on light poles. In cross-referencing Division 26, the only specification for poles is for pole mounted luminaries, however no specific reference to CCTV poles is provided. Additionally, Note #7 on Sheet 90-D-102 states to furnish poles under Section 26 56 00 – Exterior Lighting. However, this specification section does not exist within the Contract Documents.

As no clear specification for CCTV camera poles is provided, our CCTV systems installer had previously submitted precast concrete poles and posts (see attached) as the recommended pole type to be used on this project, however no action was given at the time. We'd like to confirm the use of these poles at all CCTV camera locations. All poles are sized as required for specified coverage and/or height.

The poles are acceptable if they meet the following requirements as shown on the drawings:
"The poles that include cameras are to have a maximum deflection of 1-inch at 120 mph, given a camera effective projected area (EPA) of 133 square inches. Determine and account for the the EPA of all other pole mounted equipment when determining pole deflection." Provide this information all CCTV information in the formal submittal 28 23 13-001 A.

Type	To	Request From	Number	Issue	Title	Answer	Status	Dated	Responded	Required
RFC	CH2M	KOKOLAKI	00070A		CCTV Camera Poles		CLO	4/4/2012	3/2/2012	4/11/2012

Article 3.03B within the above referenced specification section states that camera poles are specified in Division 26, and further implies that CCTV cameras are to be installed on light poles. In cross-referencing Division 26, the only specification for poles is for pole mounted luminaries, however no specific reference to CCTV poles is provided. Additionally, Note #7 on Sheet 90-D-102 states to furnish poles under Section 26 56 00 – Exterior Lighting. However, this specification section does not exist within the Contract Documents.

As no clear specification for CCTV camera poles is provided, our CCTV systems installer had previously submitted precast concrete poles and posts (see attached) as the recommended pole type to be used on this project, however no action was given at the time. We'd like to confirm the use of these poles at all CCTV camera locations. All poles are sized as required for specified coverage and/or height.

Calculations recieved from JKC.

Calculations:
1. We acknowledge the calculations submitted have been designed and stamped/sealed by an engineer licensed in the State of Florida. We have examined the calculations to verify the design criteria used meet the stated project design criteria. We have not reviewed the calculations for completeness or correctness. This is the responsibility of the engineer who stamped/sealed the submitted calculations.

Type	To	Request From	Number	Issue	Title	Answer	Status	Dated	Responded	Required
RFC	CH2M	KOKOLAKI	00071		Missed Anchor Bolts at CDO		CLO	3/13/2012	3/2/2012	3/20/2012

Anchor bolts were inadvertently left out at the columns indicated at the EAST CDO. Please see attached sketches and confirm a drill and epoxy solution. We proposed to use the previously approved "Simpson – Strong Tie Epoxy Adhesive" (per submittal 066300.002A, attached) and will comply will all manufacturer's requirements.

See attached response with attachments.

Type	To	Request From	Number	Issue	Title	Answer	Status	Dated	Responded	Required
RFC	CH2M	KOKOLAKI	00072		Availability of Bullnose Post-Forme		CLO	3/1/2012	3/12/2012	3/20/2012

Referring to detail "A" on 20-A-501, there are very few millwork fabricators that still perform a full bullnosed leading laminate edge. The best lead time found for a shop that can perform the full bullnose will not work with the schedule.

We propose to create the edges with hardwood (Maple is recommended by subcontractor) with either a clear, stained, or painted finish. See attached sketch. There will be NO cost increase for this change in detail. Subcontractor is very capable of creating this detail, which will be as durable and long lasting as laminate.

Also, per e-mail sent on 3/1, the color "Porto" from the unit kitchen supplier, Dwyer, was recently discontinued. Please furnish an alternate color.

This alternate wood edge detail is approved for the three tables. Stain wood edge to match Dwyer "Pearwood "as close as possible.
The side view of tables at termination of the wood edge is now an issue. Tables 1 and 2 have one side of furniture exposed. What will the side view look like? Will the side of the bullnose be all laminate?
How is the millworker going to finish the end of the bull nose?
Dwyer alternate finish will be "Pearwood". Please confirm that this is still in production.

Type	To	Request From	Number	Issue	Title	Answer	Status	Dated	Responded	Required
RFC	CH2M	KOKOLAKI	00073		Door 30-102B Keying		CLO	3/20/2012	3/19/2012	3/28/2012

Pursuant to the receipt of Submittal No. 08 71 00.001, we had expected a response to the included clarification request regarding keying for Door 30-102B. It reads:

1. Door 30-102B (Garage 30-101/Attendant Room 30-102): Which room is the key side of the door?

Please advise at your earliest convenience.

Key side would be in the garage.

Type	To	Request From	Number	Issue	Title	Answer	Status	Dated	Responded	Required
RFC	CH2M	KOKOLAKI	00074		Type K Fixture at Attendant Buildin		CLO	3/26/2012	3/28/2012	4/3/2012

Sheet 00-G-008 specifies a "recessed" mount for the Type K light fixture. The Type K fixture is to be installed at the front porch of each Attendant Building. However, this porch has an exposed ceiling that is Tex-Cote'd only. Please advise if this fixture can be surface mounted or if an alternative fixture should be used.

With the outlet boxes already being installed in the porch ceiling, the recessed type K fixture cannot be installed and a different type fixture will be required. Replace the submitted type K fixture with a Lithonia: VRA-26DTT-120-AL-LPI.

Type	To	Request From	Number	Issue	Title	Answer	Status	Dated	Responded	Required
RFC	CH2M	KOKOLAKI	00075		Details For Scalehouse Pedestrian		CLO	3/27/2012	3/26/2012	4/3/2012

Please provide cuts through the pedestrian ramp at the rear of the scalehouse. Civil and structural drawings do not indicate what the 4" sidewalk (per FDOT 310) bears on as the elevation increases from 200' to 202'. None of the other referenced indices, 880 and 304, assist with the needed details either.

There is a cut the long way on 06-C-501. The sidewalk bears on soil. Slope the soil to the top of curb (worst case is 2:1) and sod the slope. No section cut is needed in the other direction.

Type	To	Request	From	Number	Issue	Title	Answer	Status	Dated	Responded	Required
RFC	CH2M		KOKOLAKI	00076		Requirement for Mounded Septic Drai		CLO	3/31/2012	4/4/2012	4/11/2012
		Upon inspection and soil analysis from Florida Environmental Health Department it has been determined that a mounded septic tank and drain field system will be required at the East site. The mounded drain field essentially sits on top of the ground by about 18". Therefore, the designed sanitary inverts from the scalehouse and attendant building will not work without incorporating a grinder pump, tank, and electric service. According to the Health Dept. the location of the drain field shown on 06-C-101 & 102 will violate setback requirements of 75' from the wetland area to the NE (Section 333600 1.04.C). If the borrow pit area north of the scalehouse is deemed 'dry' for at least 180 days by independent engineering, then the drain field can be located close to this area. Since a pump needs to be incorporated, many alternate locations exist where to put the septic tank and drain field. Please confirm the location of the pump/tank quickly as electric needs to be roughed-in immediately. Attached are the Health Department Requirements. Contact information is below. Health Department: Danny Harris (Supervisor), 813-588-5173, danny_harris@doh.state.fl.us Health Department					Pasco County has provided JKC the name of a local septic tank installer. Submit a proposed location and design to CH2M HILL.				
RFC	CH2M		KOKOLAKI	00077		Pilaster Extension at East Scalehou		CLO	4/9/2012	4/9/2012	4/17/2012
		We propose the following remediation for the two pilasters at the front of the East scalehouse. See attached sketch for intent. Double-hook bars will be epoxy-dowelled into the existing pilaster every 8" vertically from the footing to the top of the pilaster (#4 bars). Two vertical #4 bars will reside at each corner of each hook. The surface of the existing concrete to be roughened prior to pouring new concrete. Bonding agent to be utilized. After form work is removed, the new, wider pilaster will be rubbed, patched, and smoothed for permanent, seamless appearance.					Provide sections showing reinforcing details proposed. Chamfered edges shall be chipped to remove sharp angle at inside edge. We also require that the building /canopy manufacture inspect the connection detail including the bolt skew and give their approval prior to final fix of the support pilaster.				
RFC	CH2M		KOKOLAKI	00077A		Pilaster Extension at East Scalehou		IR	4/18/2012		4/25/2012
		(JKC to provide addittional information from response to CCIR 077)									
RFC	CH2M		KOKOLAKI	00078		Type 'G' Light Fixture Clarificatio		CLO	4/9/2012		4/17/2012
		Sheet 30-E-101 indicates a total of eight (8) retaining wall bays; however there are actually ten (10) bays per 30-S-101. Please advise if the current quantity of Type 'G' light fixtures should be spaced further apart or if additional light fixtures are required to account the two (2) bays not identified within the electrical drawings.					The Electrical Drawing 30-E-101 indicates a typical dimension of 25'-0" between lights. Provide Type "G" lighting throughout all the CDO bays as intended.				
RFC	CH2M		KOKOLAKI	00079		Scalehouse Platform Framing		CLO	4/11/2012	5/1/2012	5/1/2012
		When attempting to install the scale house platform framework, as detail within 1 and F/10-S-301, it was discovered that the bumper rail bracket that is fastened to the side of the scale platform, conflicts with the overall design width of the steel platform assembly. As illustrated within the attached sketch, we have proposed to shorten the platform width by approximately 7"- 8". Otherwise, the c-channel perimeter beam, and a small portion of the bar grating would encroach on the projecting length of bracket. In shortening the grated platform width, a gap of each distance will occur between the scale and grated platform. We've proposed to incorporate a plate steel ledge as illustrated and stipulated within the attached sketch. This proposal was finalized via phone discussions with the project team today. We have begun to move forward to immediately implement these changes. Please note that a cost proposal may be required by the subcontractor responsible for the installation of this assembly as the incorporation of the steel plate ledge is a necessary design element of the assembly for the purpose of eliminating any conflict with the bumper rail bracket.					The approach as detailed in the attached sketch is generally acceptable. Cutting and welding should be limited to one end. The County has questioned the need for the proposed plate between the walkway and the scale platform. County and Engineer will look at the installation of the walkway when it is completed and decide if they want to include a plate. The plate does not appear to be needed for safety.				

Type	To	Request	From	Number	Issue	Title	Answer	Status	Dated	Responded	Required
RFC	CH2M		KOKOLAKI	00080		CDO Canopy Framing Field Adjustment		CLO	4/13/2012	5/22/2012	4/20/2012
		Pursuant to numerous discussions regarding the welded beam connections being utilized at both the east and west site CDO canopy framework, please see the attached documentation provided by the trade responsible for the installations in question. Please note, all welds have been inspected and approved for quality by an AWS Certified Weld Inspector as specified. Final inspection reports as well as inspector and welder certifications will be forwarded once the weld inspector has received the EOR's acceptance (in the form of a response to this CCIR) of the ¼" weld size at these locations. The inspector has certified that the welds performed are all no less than ¼" in width. Please advise with any questions.						See Submittals				
RFC	CH2M		KOKOLAKI	00081		Rain Shed Slab Elevation Adjustment		CLO	4/24/2012	4/23/2012	5/2/2012
		Pursuant to a field observation conducted yesterday at the rain shed slab, it has been discovered that the edge of the concrete pavement, where the concrete pavement transitions to the rain shed slab, was not crowned to the elevation noted on RFP No. 016 (50.2'). The elevation of 50.0' was maintained across the full length of the transition point. To fix the foreseen water shedding conflict that will result from not complying with the detail provided within RFP No. 016, we've advised, in correlation with everyone present at our weekly construction meeting yesterday, to adjust the elevations of the rain shed slab as indicated within the attached sketch. Please advise if this adjustment is acceptable. If not, please notate the desired changes. We've withheld placing this slab until a response is received.						See the revised elevations on the attachment. Note that the low point in the Rain Shed Pad is 2 feet north of the north edge of the CDO pavement, not at the mid-point of the slab.				
RFC	CH2M		KOKOLAKI	00082		KVM Extender		CLO	4/25/2012	4/24/2012	5/2/2012
		It has recently been brought to our office's attention that the basis-of-design KVM extender (highlighted attached) has been both discontinued and was never equipped with a serial port connection, which is required for PC Scale's equipment, only USB can be provided. According to PC Scale's requirements, they need three (3) PC's. Two (2) PC's with four (4) serial ports each and one (1) PC with eight (8) serial ports. We are being advised however, that if the KVM extenders are eliminated from the project, the general workstation PC's (configured for PC Scale software) will work with the 8-port serial cards already specified to be installed within the PC's, per RFP No. 021. These PC's would have to remain at the workstations however. It does not appear that a KVM extender exists for which a total sixteen (16) serial ports can be connected. We advise that the KVM extenders be eliminated from the project. Otherwise, please advise how the desired result can be achieved with the specified equipment.						The KVM extenders are not intended for use with the serial port connections. The purpose of the KVM extenders is to provide extension of Keyboard, Video, Mouse, and USB port connections from the computers located in the network closet to the workstations located at the operator work areas. Serial port connections are to be provided directly to the PC workstations located in the network closets. If an alternate installation is proposed that eliminates the KVM extenders then please provide plans of the alternate installation along with a cost savings proposal for review and acceptance by the Owner and Engineer.				
RFC	CH2M		KOKOLAKI	00083		UPS Installation Conflict		CLO	4/25/2012	5/7/2012	5/24/2012
		According to drawings sheet 10-E-102 there is one circuit for the IT room along the wall in three places (10-LP-1-23) and one circuit for the IT rack in room (10-LP-1-28). The APC battery backup equipment on site needs two separate circuits that require (2) LS-30 receptacles and upgrade the wire and up the breaker size from a 20 amp to a 30 amp. Please instruct us how to proceed and taking in consideration the desired to have this on line for Monday. Same Issue on the East Pasco site.						The original plans called for 3-20A circuits going to the rack. Two of these circuits had #12 wire and one had #10 wire. Two of these 20A circuits were converted to 30A circuits and the third was switched to a spare breaker (no wire or conduit. According to our estimate, the County should be receiving a credit of $205 per site for this modification.				
RFC	CH2M		KOKOLAKI	00084		8-Port Serial Card Conflict		CLO	4/30/2012	5/17/2012	5/8/2012
		During the setup of the workstation computer equipment, it was discovered that the 8-port serial cards purchased through RFP No. 021, do not match the serial card slots provided within the workstation computers also purchased through this RFP. As it appears, a "PCI Express Mini" serial card is required in lieu of the "standard" option provided with the ordered serial cards. See attached photo of the serial card purchased through RFP No. 021. Please be advised that we have proceeded with acquiring these necessary serial cards and that additional costs associated with procuring them will be subject to compensation if deemed necessary. These serial cards must be in-hand no later than Thursday this week to avoid delaying the opening of the new scale houses.						The information above is correct. The 8-port serial interface cards listed in the RFP were low-profile PCI cards. The listed workstations were Dell Optiplex 390 Mini-Towers which require full height PCI cards. Provide the full height PCI cards as required to fit the Mini-Tower Chassis.				

Type	To	Request	From	Number	Issue	Title	Answer	Status	Dated	Responded	Required
RFC	CH2M		KOKOLAKI	00085		Interior Signage Location Verificat		CLO	5/2/2012	5/8/2012	5/16/2012
		The signage schedule within Section 10 14 00 – Identifying Devices, indicates for the interior signage to be mounted on the door. However, ADA requires that signs be located on the handle side of the door at 60" OC AFF. Please advise if the signs should be installed on the door as specified or installed in accordance with ADA guidelines.					Yes, please follow Florida Accessibility code for placement of signs in the Scalehouse and Attendant Buildings on walls instead of doors as scheduled. Note that mounting height is 60" to centerline of sign.				
RFC	CH2M		KOKOLAKI	00086		ERP Sign Proof East Site		CLO	7/24/2012	6/29/2012	7/31/2012
		Please verify if the attached proof for the ERP signs on the East site is acceptable. Ref. RFP 024.					The proof is acceptable.				
RFC	KOKOLAKI		CH2M	00700		FDEP's ERP for the East Pasco Upgra		CLO	9/20/2011		10/20/2011
		FDEP's ERP for the East Pasco Upgrades requires that riprap be added to the outlet of the stormwater pond. Contractor is to provide rip-rap as indicated on the attached drawing.					See RFP 005				
RFC	KOKOLAKI		CH2M	00701		Metals Recycling Area		CLO	10/18/2011	11/14/2011	10/25/2011
		For the West Pasco Upgrades, the has requested that the metals recycling area be expanded to allow the existing facilities to remain in place during construction of the new facilities and to provide a larger concrete pad for the new area. See attached drawing for proposed revisions to the metals recycling area. JKC is authorized to proceed with the proposed revisions provided there are no impacts to Contract Amount or Contract Time. If the proposed changed will impact Contract Amount and/or Contract Time, please inform the Engineer so that an RFP can be initiated.					Closed per RFP 0006				
RFC	KOKOLAKI		CH2M	00702		Electrical Disconnects & Conductors		CLO	12/22/2011		12/29/2011
		The following electrical modification are required: 1)Provide two (2) additional non-fused disconnect switches. -One (1) NEMA 4X, 316 stainless steel, 30A, 2-pole, 600V, heavy duty non-Fused Disconnect Switch for West Pasco CDO building A/C unit (30-ACU-1), as shown on attached Drawing 30-E-104. -One (1) NEMA 4X, 316 stainless steel, 30A, 2-pole, 600V, heavy duty non-Fused Disconnect Switch for East Pasco CDO building A/C unit (40-ACU-1), as shown on attached Drawing 40-E-104. Non-Fused Disconnect Switches shall match the other switches submitted and approved by Engineer. 2) Increase the conductor size for the line-side feeder circuit phase conductors for Transformers 30-TX-1 and 40-TX-1, from 3#8 to 3#6. An RFP will be issued for these modifications.					See RFP 009				
RFC	KOKOLAKI		CH2M	00703		Curbing & Flumes & RFP 014		CLO	2/1/2012		2/8/2012
		Provide curb and gutter and curb opening flumes as shown on the Attachment 1 Drawing 05-C-105 and Attachment 2 Drawing 05-C-106. RFP 014 is being issued.					Refer to RFP 014				
RFC	KOKOLAKI		CH2M	00704		Rain Shed		CLO	2/17/2012		3/15/2012
		The Rain Shed will have an air conditioner, refrigerator, microwave, lighting and receptacles. Utilize the three spare 20A, 1-pole circuit breakers (circuits 37, 39, 41) in lighting panel 30-LP-1 to power these loads. One circuit for the air conditioner, one circuit for the refrigerator and one circuit for the microwave, lighting and the receptacles. (Drawing 30-E-106) Utilize the 1 inch conduit installed for motorized gate 05-LCP-1-2, to route 6#10 AWG conductors from lighting panel 30-LP-1 to the nearest (Electric) handhole to the rain shed (see drawing 30-E-102). From the (Electric) handhole provide [1"C, 6#10, 1#10G] to the rain shed. Provide a NEMA 4X 316 stainless steel junction box mounted per detail 2605-005b on the West side of rain shed to connect the three circuits to the different loads inside the rain shed. Increase the size of the rain shelter pad to 16' x 24' as shown on the attached Drawing 05-C-106. Minor grading changes on attached Drawing 05- C104.					Refer to RFP 016				

Type	To	Request	From	Number	Issue	Title	Answer	Status	Dated	Responded	Required
RFC	KOKOLAKI	CH2M	00705			Tex Coat		CLO	2/15/2012		2/22/2012

In response to JKC email from Rod Voigt Dated February 13, 2012 regarding the Joints:

Sorry you could not make it down today to look at the Tarpon Public safety facility. Seeing in person is much easier but I will do my best to explain with pictures. Keep in mind that this building has been in service over 10 years with zero maintenance. As you can see, the tex-cote was applied over the caulk joint. All joints were treated properly to insure maximum adhesion. Since we sprayed over the joints, Grey caulk was used, not colored. Joint #1, #2 & #4 are typical to what will be seen on about 90% of the joints. Joints #3 & #5 are about 10% of the joints. Joint #5 is right next to an entrance door so I am not sure if people were scraping on it.
I see two options:
1. Caulk using colored caulk similar to wall finish and Tex-cote over it so when it does crack it will not be too visible.
2. Caulk after the tex-cote with a close color caulk and do not have to worry about texcote peeling. Joints will be more visible but should remain consistent throughout its service life.
We will do either method as desired. This is not a functional question but purely aesthetic. On the Tarpon project, the owner was not satisfied with the cracking and we had a difficult time explaining that tex-cote does not behave like caulk and will crack. Both CH2M Hill and JKC what to deliver the best possible facility with a very satisfied client. Please take a look at the pictures and get back to me as early as possible. We are looking to start this work tomorrow.

The best procedure is to install backer rods in uniform width joints, then coat all surfaces with Tex-Cote, and then install compatible sealant into joint. This should result in non cracked or Tex-Cote finish spalding. Sealant should match Tex-Cote finish coat as close as possible.

Type	To	Request	From	Number	Issue	Title	Answer	Status	Dated	Responded	Required
RFC	KOKOLAKI	CH2M	00706			Weld Plates for Wall Armor		CLO	2/2/2012		2/22/2012

Provide unit price and maximum amount of units for 4" x 4" x 3/8" embedded weld plates for future armor plate connections. Embedments are to be located on the top of the wall and 12" from the finished floor on the shorter side of the wall and connections are to be centered 4' apart typical.

Refer to RFP 017

Locations are shown on Attachment 1 and Attachment 2.

Type	To	Request	From	Number	Issue	Title	Answer	Status	Dated	Responded	Required
RFC	KOKOLAKI	CH2M	00707			Bollards		CLO	2/20/2012	2/29/2012	2/29/2012

Provide 6" Guard Post per Standard Detail 3305-954 as shown on the Attached Drawings:

Closed

06-C-102 – 4 each standard guard posts & 2 each 10ft high guard posts

06-C-103 – 16 each standard guard post

05-C-103 - 4 each standard guard posts & 2 each 10ft high guard posts

05-C-104 - 20 each standard guard post

RFP015 Bollards will be issued for this change.

Type	To	Request	From	Number	Issue	Title	Answer	Status	Dated	Responded	Required
RFC	KOKOLAKI	CH2M	00707A			Bollards		CLO	2/29/2012	2/29/2012	3/7/2012
		Provide 6" Guard Post per Standard Detail 3305-954 as shown on the Attached Drawings: 06-C-102 – 4 each standard guard posts & 2 each 10ft high guard posts 06-C-103 – 16 each standard guard post 05-C-103 - 4 each standard guard posts & 2 each 10ft high guard posts 05-C-104 - 20 each standard guard post RFP015 Bollards will be issued for this change. In areas where pavement has already been placed: At CDO: Thicken the concrete pavement to 12" minimum at the bollards and follow the standard detail attached. The thickened portion should extend 5' past the bollards in all directions unless prohibited by the existing walls. Reinforce the thickened slab with #5 @ 12" o.c. each way top and bottom, with the top bars lapping with the typical reinforcing in the 8" thick concrete pavement. At the Scale House: Saw cut a 4'-0" x 4'-0" opening at the support location, and place a 12" thick footing with the support embedded as shown in the bollard detail. Reinforce the footing with 4-#5 @ 12" o.c. each way, top and bottom.	Refer to RFP 015				
RFC	KOKOLAKI	CH2M	00708			Grinder Pump Breaker		CLO	2/20/2012		2/29/2012
		A 40 Amp main breaker was submitted for the main feed to the wastewater holding tank pump control panel LCP-15-1 in Submittal 43 21 40-001. Based on this submitted breaker size, provide a 40 Amp circuit breaker in existing panel HP1 and 3#8AWG conductors and #10AWG ground to feed LCP-15-1 for proper circuit coordination in lieu of the 20Amp circuit shown on drawing 06-E-002. Refer to attached markup of drawing 06-E-002 for additional information.	Refer to RFP 029				
RFC	KOKOLAKI	CH2M	00709			PC Scales, Inc. Software Clarificat		CLO	3/7/2012	5/22/2012	2/29/2012
		East Pasco Ramp Concrete: The stand alone concrete spread footings supporting the scale shall be demolished and replaced at the required locations and elevations as coordinated with the scale manufacturer. Refer to the attached sketch for the demolition plan and new concrete topping plan. At each end where the concrete spread footing is placed integral with the concrete ramp and platform.	Work Completed				
RFC	KOKOLAKI	CH2M	00710			Additional Cameras		CLO	2/29/2012		3/19/2012
		Replace the existing (2) PTZ cameras at the Resource Recovery Facility Scalehouse with new IP based PTZ cameras meeting specification section 28 23 13, CCTV System Article Supplement 1, Component Specifications; Component Y202 Color Camera, Security, PTZ having an Ethernet RJ-45 interface in lieu of the specified fiber optic cable interface. Camera shall be Bosch Autodome 500i series to match cameras provided at the other Pasco County facilities that are part of this project. Provide PTZ cameras with new surge suppression for power and Ethernet cables and install on existing poles using existing power and communication circuits. Configure cameras to meet the functional requirements specified in section 28 23 13 Article 1.04, Functional Requirements, specifically 1.04.D.6a-d. Requirements listed in section 28 23 13 for viewing, storage, and control of PTZ cameras shall be provided. Provide configuration to add these (2) cameras to the DVR system to be installed at the West Pasco Scalehouse. Provide quotation for all work listed above. Refer to attached photos for Cameras to be replaced and coordinate replacement with the Owner.	See RFP 0020, Additional CCTV Camera Pack				
RFC	KOKOLAKI	CH2M	00711			Ceiling Height		CLO	3/9/2012	3/14/2012	3/19/2012
		The ceiling height in the attendant room of the attendant buildings on both East and West Pasco sites can be lowered to 7'10" to allow for clearances for the transformer. All other rooms are to remain as shown in the contract drawings.	No Response Required				

Type	To	Request	From	Number	Issue	Title	Answer	Status	Dated	Responded	Required
RFC	KOKOLAKI		CH2M	00712		Leachate Tank Incorrect Elevation		CLO	4/10/2012	4/17/2012	4/17/2012
		The leachate tank on the East site was installed at Top of Tank Elevation 194.83ft rather than designed Top of Tank elevation 193.50ft. The proposed stormwater inlet adjacent to the leachate tank will need to be revised to accommodate this elevation difference. The attached shows the revised invert elevation for the 6" WDW line to 195.93ft and curb modifications. A 4.75-inch "notch" in the bottom of the curb is needed to get at least 0.8% slope on the WDW line in lieu of 1.3% (as designed). Grout the bottom of the inlet to the invert elevation to prevent sediment build up.			As-Builts Drawing Provided			
RFC	KOKOLAKI		CH2M	00713		Canopy Visual Inspection Not Acce		CLO	4/25/2012	5/22/2012	5/2/2012
		Upon visual inspection by Monrad Thue from CH2M HILL on Wednesday April 18, 2012, the canopy field welds are not acceptable. Whitley Steel is to provide calculations on the capacities of the connections where they are field welded. Grout pads under the canopy columns are not installed per the Contract documents, or at uniform thickness. Cracks in the grout were observed. JKC is to provide depth of grout pads for review by CH2M HILL prior to continuing any grouting. JKC is to provide Euclid (Grout manufacture) representative to inspect application of product and provide documentation of acceptance prior to continuing grouting. As of this date April 19, 2012 no welder certifications or CWI Certifications have been received. JKC to provide certifications. See attached photos of unacceptable welds and grout pads.			See Submittal			
RFC	KOKOLAKI		CH2M	00714		East Scalehouse Parking configura		VOI	4/25/2012	5/22/2012	5/2/2012
		As requested by Pasco County, the parking configuration has been modified as shown on the attachment. The parking spots have been modified with parallel access, striping, and parallel space for the handicap space. No change in contract price is expected as the amount of asphalt has not changed.			Not Implemented			

CONTRACT DOCUMENTS
For the Construction of

PASCO COUNTY
SOLID WASTE UPGRADE
PASCO COUNTY, FLORIDA

WEST PASCO COUNTY RECORD DRAWINGS FOR PERMIT

DRAWINGS

VOLUME 4 OF 4

RECORD DRAWINGS

Revisions Drawn By D WELLS Date AUGUST 2012

THESE RECORD DRAWINGS HAVE BEEN PREPARED, IN PART, ON THE BASIS OF INFORMATION COMPILED BY OTHERS. THEY ARE NOT INTENDED TO REPRESENT IN DETAIL THE EXACT LOCATION, TYPE OF COMPONENT NOR MANNER OF CONSTRUCTION. THE ENGINEER WILL NOT BE RESPONSIBLE FOR ANY ERRORS OR OMISSIONS WHICH HAVE BEEN INCORPORATED INTO THE RECORD DRAWINGS.

ARCHITECT BAY AND

FLORIDA DEPARTMENT OF ENVIRONMENTAL PROTECTION
AUG 07 2012
SOUTHWEST DISTRICT TAMPA

For Information regarding this project contact:
Rufus J Bruner, III, PE
3011 SW Williston Rd
Gainesville, Fl 32608

CH2MHILL
3011 SW WILLISTON RD
GAINESVILLE, FLORIDA 32608
STATE OF FLORIDA
ARCHITECTURAL BUSINESS NO. AA001992
ENGINEERING BUSINESS NO. EB0000072

CH2M HILL Project No. 378217

AUGUST 2012

VICINITY MAP
NTS

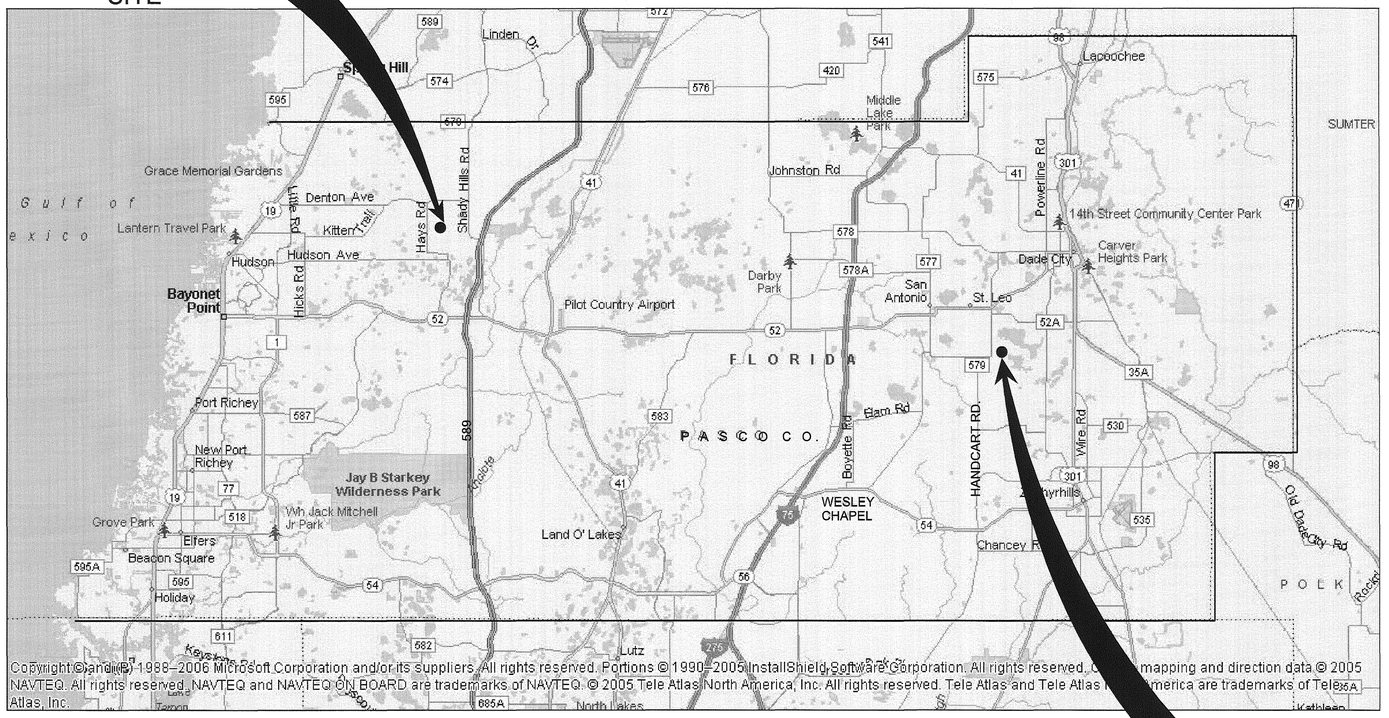

Copyright © and (P) 1988–2006 Microsoft Corporation and/or its suppliers. All rights reserved. Portions © 1990–2005 InstallShield Software Corporation. All rights reserved. Portions mapping and direction data © 2005 NAVTEQ. All rights reserved. NAVTEQ and NAVTEQ ON BOARD are trademarks of NAVTEQ. © 2005 Tele Atlas North America, Inc. All rights reserved. Tele Atlas and Tele Atlas North America are trademarks of Tele Atlas, Inc.

LOCATION MAP
NTS

INDEX OF DRAWINGS

00 - GENERAL

00-G-001 COVER SHEET
00-G-002 INDEX TO DRAWINGS AND SITE LOCATION MAP
00-G-003 ABBREVIATIONS - SHEET 1
00-G-003A ABBREVIATIONS - SHEET 2
00-G-004 CIVIL NOTES AND LEGEND
00-G-005 STRUCTURAL GENERAL NOTES
00-G-006 ARCHITECTURAL LEGEND AND GENERAL NOTES
00-G-007 MECHANICAL LEGEND
00-G-008 ELECTRICAL LEGEND - SHEET 1
00-G-009 ELECTRICAL LEGEND - SHEET 2
00-G-010 INSTRUMENTATION AND CONTROL - LEGEND 1
00-G-011 INSTRUMENTATION AND CONTROL - LEGEND 2

05 - WEST PASCO - SITE

05-C-101 WEST PASCO SITE - GENERAL SITE LAYOUT
05-C-102 WEST PASCO SITE - SITE LAYOUT AND UTILITIES PLAN
05-C-103 WEST PASCO SITE - SITE LAYOUT AND UTILITIES PLAN
05-C-104 WEST PASCO SITE - SITE LAYOUT AND UTILITIES PLAN
05-C-105 WEST PASCO SITE - GRADING, DRAINAGE, AND EROSION CONTROL PLAN
05-C-106 WEST PASCO SITE - GRADING, DRAINAGE, AND EROSION CONTROL PLAN
05-C-501 WEST PASCO SITE - SECTIONS
05-C-502 WEST PASCO SITE - SECTIONS
05-C-503 WEST PASCO SITE - DETAILS
05-C-504 WEST PASCO SITE - DETAILS
05-E-101 WEST PASCO SITE - OVERALL ELECTRICAL SITE PLAN
05-E-301 WEST PASCO SITE - DUCTBANK SECTIONS

10 - WEST PASCO - SCALEHOUSE

10-S-101 WEST PASCO SITE - SC ALEHOUSE CANOPY AND SITE FOUNDATION
10-S-301 WEST PASCO SITE - SCALEHOUSE SECTIONS AND DETAILS
10-A-101 WEST PASCO SITE - SCALEHOUSE FLOOR PLAN AND CODE INFORMATION
10-A-102 WEST PASCO SITE - SCALEHOUSE FLOOR PLAN, ROOF PLAN, AND REFLECTED CEILING PLAN
10-A-103 WEST PASCO SITE - SCALEHOUSE CANOPY FLOOR \ ROOF PLAN AND DETAIL
10-A-201 WEST PASCO SITE - SCALEHOUSE ELEVATIONS
10-A-501 WEST PASCO SITE - SCALEHOUSE MILLWORK AND DETAILS
10-M-101 WEST PASCO SITE - SCALEHOUSE PLAN
10-M-601 WEST PASCO SITE - SCALEHOUSE EQUIPMENT SCHEDULES
10-P-101 WEST PASCO SITE - SCALEHOUSE PLAN
10-P-102 WEST PASCO SITE - SCALEHOUSE RISER AND DETAILS
10-E-101 WEST PASCO SITE - SCALEHOUSE AND CANOPY LIGHTING PLAN
10-E-102 WEST PASCO SITE - SCALEHOUSE POWER PLAN
10-E-103 WEST PASCO SITE - SCALEHOUSE PROCESS PLAN
10-E-104 WEST PASCO SITE - SCALEHOUSE GROUNDING PLAN
10-E-401 WEST PASCO SITE - SCALEHOUSE ENLARGED PLANS
10-E-501 WEST PASCO SITE - SCALEHOUSE DETAILS AND SECTIONS
10-E-601 WEST PASCO SITE - POWER DIAGRAM AND SCHEDULES
10-E-602 WEST PASCO SITE - RISER DIAGRAMS

30- WEST PASCO - CITIZEN DROP OFF

30-S-101 WEST PASCO SITE - CITIZEN DROP OFF AREA - FOUNDATION PLAN
30-S-102 WEST PASCO SITE - CITIZEN DROP OFF AREA - CANOPY ROOF PLAN
30-S-301 WEST PASCO SITE - CITIZEN DROP OFF AREA - SECTIONS AND DETAILS
30-S-302 WEST PASCO SITE - CITIZEN DROP OFF AREA - SECTIONS AND DETAILS
30-A-101 WEST PASCO SITE - CITIZEN DROP OFF AREA - ATTENDANT BUILDING LIFE SAFETY AND FLOOR PLAN
30-A-102 WEST PASCO SITE - CITIZEN DROP OFF AREA - CANOPY ROOF PLANS
30-A-201 WEST PASCO SITE - CITIZEN DROP OFF AREA - ATTENDANT BUILDING ELEVATIONS
30-M-101 WEST PASCO SITE - CITIZEN DROP OFF AREA - PLAN
30-P-101 WEST PASCO SITE - CITIZEN DROP OFF AREA - ATTENDANT BUILDING FLOOR PLAN
30-E-101 WEST PASCO SITE - CITIZEN DROP OFF AREA - LIGHTING PLAN
30-E-102 WEST PASCO SITE - CITIZEN DROP OFF AREA - POWER PLAN
30-E-103 WEST PASCO SITE - CITIZEN DROP OFF AREA - POWER PLAN
30-E-104 WEST PASCO SITE - CITIZEN DROP OFF AREA - ATTENDANT BUILDING - POWER AND LIGHTING PLAN
30-E-301 WEST PASCO SITE - DUCTBANK SECTIONS
30-E-401 WEST PASCO SITE - CITIZEN DROP OFF ENLARGED PLANS
30-E-501 WEST PASCO SITE - CITIZEN DROP OFF AREA - DETAILS
30-E-601 WEST PASCO SITE - CITIZEN DROP OFF AREA - DIAGRAMS

50 - WEST PASCO - OLD SCALE HOUSE RENOVATION

50-A-101 WEST PASCO SITE - OLD SCALEHOUSE RENOVATION DEMOLITION PLAN
50-A-102 WEST PASCO SITE - OLD SCALE HOUSE RENOVATION - NEW CONSTRUCTION

90 - WEST PASCO - INSTRUMENTATION & CONTROL

90-D-101 WEST PASCO SITE - SCALE SYSTEM - BLOCK DIAGRAM
90-D-102 WEST PASCO SITE - SITE CAMERA COVERAGE
90-D-103 WEST PASCO SITE - CDO CCTV LAYOUT
90-D-104 WEST PASCO SITE - CONTROL SYSTEM - BLOCK DIAGRAM
90-D-105 WEST PASCO SITE - FIGURES

RECORD DRAWINGS

Revisions Drawn By D WELLS Date 7/16/12

THESE RECORD DRAWINGS HAVE BEEN PREPARED, IN PART, ON THE BASIS OF INFORMATION COMPILED BY OTHERS. THEY ARE NOT INTENDED TO REPRESENT IN DETAIL THE EXACT LOCATION, TYPE OF COMPONENT NOR MANNER OF CONSTRUCTION. THE ENGINEER WILL NOT BE RESPONSIBLE FOR ANY ERRORS OR OMISSIONS WHICH HAVE BEEN INCORPORATED INTO THE RECORD DRAWINGS.

RUFUS J BRUNER III ★ LICENSE NO. 35951 ★ STATE OF FLORIDA ★ PROFESSIONAL ENGINEER

NO.	DATE	REVISION	BY	APVD
DSGN	R BRUNER	DR K RINER	CHK KR CHANG	APVD R BRUNER

3011 SW WILLISTON RD
GAINESVILLE, FLORIDA 32608
EB00000072 AAC001992
RUFUS J BRUNER, III PE 35951

SOLID WASTE SYSTEM
UPGRADE DESIGN
PASCO COUNTY
PASCO COUNTY, FLORIDA

©CH2M HILL 2010. ALL RIGHTS RESERVED.
REUSE OF DOCUMENTS: THIS DOCUMENT, AND THE IDEAS AND DESIGNS INCORPORATED HEREIN, AS AN INSTRUMENT OF PROFESSIONAL SERVICE, IS THE PROPERTY OF CH2M HILL AND IS NOT TO BE USED, IN WHOLE OR IN PART, FOR ANY OTHER PROJECT WITHOUT THE WRITTEN AUTHORIZATION OF CH2MHILL.

RECORD DRAWINGS FOR PERMIT

CH2MHILL

GENERAL
INDEX TO DRAWINGS AND SITE LOCATION MAP

VERIFY SCALE
BAR IS ONE INCH ON ORIGINAL DRAWING.
0 1"

DATE	AUGUST 2012
PROJ	378217
DWG	00-G-002
SHEET	

ABBREVIATIONS

A	AMMETER, AMPERES, AWNINGS
AB	ANCHOR BOLT, ABOVE
ABDN	ABANDON
AC	ACOUSTICAL, ACOUSTICAL CEILING
AC	ALTERNATING CURRENT
AC	ASPHALTIC CONCRETE
ACFL	ACCESS FLOORING
ACI	AMERICAN CONCRETE INSTITUTE
ACMU	ACOUSTICAL CONCRETE MASONRY UNIT, ACOUSTICAL CMU
ACP	ACOUSTICAL PANELS
ACST	ACOUSTICAL
ACT	ACOUSTICAL TILE
AD	AREA DRAIN
ADDL	ADDITIONAL
ADJ	ADJACENT
ADW	DRY WEATHER AVERAGE
AFD	ADJUSTABLE FREQUENCY DRIVE
AFF	ABOVE FINISHED FLOOR
AFG	ABOVE FINISHED GRADE
AG	ACOUSTICAL, ACOUSTICAL GLASS
AGGR	AGGREGATE
AHR	ANCHOR
AISC	AMERICAN INSTITUTE OF STEEL CONSTRUCTION
AJ	ADJUSTABLE
AL	ALUMINUM
ALKY	ALKALINITY
ALTN	ALTERNATE
AM	AUTO-MANUAL
AMRD	ACOUSTICAL METAL ROOF DECKING
ANDZ	ANODIZE
APPROX	APPROXIMATE
APVD	APPROVED
ARCH	ARCHITECTURAL
AR	ANALOG RELAY
AS	AS SELECTED
ATS	AUTOMATIC TRANSFER SWITCH
AUTO	AUTOMATIC
AUX	AUXILIARY
AVG	AVERAGE
AWW	WET WEATHER AVERAGE
@	AT
B	BELL
BAL	BALANCE
BETW	BETWEEN
BF	BLIND FLANGE, BOTTOM FACE
BFV	BUTTERFLY VALVE
BL	BASELINE
BFP	BACKFLOW PREVENTER
BLDG	BUILDING
BLK	BLOCK
BM	BEAM, BENCHMARK
BO	BOTTOM OF
B.O.B.	BOTTOM OF BEAM
BOD	BOTTOM OF DUCT
BOP	BOTTOM OF PIPE
BOT	BOTTOM
BRG	BEARING
BRK	BRICK
BRKR	BREAKER
BSP	BLACK STEEL PIPE
BV	BALL VALVE, BLOCK VENT
BVC	BEGINNING OF VERTICAL CURVE
C	CONDUIT, CASEMENT
°C	DEGREE CELSIUS
C TO C	CENTER TO CENTER
CAB	CABINET
CB	CATCH BASIN, CIRCUIT BREAKER
CC	CENTER OF CIRCLE
CC	CONTROL CABLE
CCP	CENTRAL CONTROL PANEL
CCS	CENTRAL CONTROL SYSTEM
CDF	CONTROLLED DENSITY FILL
CE	CONSTRUCTION ENTRANCE
CFM	CUBIC FEET PER MINUTE
CFS	CUBIC FEET PER SECOND
CHEM	CHEMICAL
CHKD	CHECKERED
CI	CAST IRON
CIP	CAST IRON PIPE, CAST IN PLACE
CIP	CULVERT INLET PROTECTION
CISP	CAST IRON SOIL PIPE
CJ	CONSTRUCTION JOINT
CKT	CIRCUIT
CL	CENTERLINE
CLDI	CEMENT LINED DUCTILE IRON

CLFS	CONTROLLED LOW STRENGTH FILL
CLG	CEILING
CLR	CLEAR, CLEARANCE
CMP	CENTRAL MONITORING PANEL
CMP	CORRUGATED METAL PIPE
CMU	CONCRETE MASONRY UNIT
CNTR	COUNTER
CO	CLEANOUT, CARBON MONOXIDE
COL	COLUMN, COLOR
CONC	CONCRETE
COND	CONDENSATE
CONDTN	CONDITIONED
CONN	CONNECTION
CONSTR	CONSTRUCTION
CONT	CONTINUED, CONTINUOUS, CONTINUATION
CONTR	CONTRACTOR
COORD	COORDINATE
COP	COPPER
CP	CENTER PIVOT
CP-X	CONTROL PANEL NO. X
CPLG	COUPLING
CPRSR	COMPRESSOR
CPT	CONTROL POWER TRANFORMER, CARPET
CPVC	CHLORINATED PVC
CR	CONTROL RELAY
CRS	COLD ROLLED STEEL
CRS	CONSTRUCTION ROAD STABILIZATION
CT	CERAMIC TILE
CT	CURRENT TRANSFORMER
CTC	COMPUTER TERMINAL CABINET
CTR	CENTER
CTRD	CENTERED
CTSK	COUNTERSUNK
CU	CUBIC
CU FT	CUBIC FOOT
CU IN	CUBIC INCH
CUH	COPPER TUBING, HARD DRAWN
CV	CHECK VALVE
CWR	CABINET DOOR MOUNTED WASTE RECEPTACLE
CY, CU YD	CUBIC YARD
CWS	CLEAN WATER SERVICES
D	DEEP, DRAIN
d	PENNY NAIL SIZE
DA	DUAL ACTION
DAS	DATA ACQUISTION SYSTEM
DBA	DEFORMED BAR ANCHOR
DBL	DOUBLE
DC	DIRECT CURRENT
DEG	DEGREE
DET	DETAIL
DF	DOUGLAS FIR, DRINKING FOUNTAIN
DDI	DROP INLET
DH	DOUBLE HUNG
DI	DUCTILE IRON
DIA	DIAMETER
DIAG	DIAGONAL
DIP	DUCTILE IRON PIPE
DIR	DIRECTION
DISCH	DISCHARGE
DN	DOWN
DO	DISSOLVED OXYGEN
DOL	DIRECT-ON-LINE
DP, DPNL	DISTRIBUTION PANEL
DR	DOOR
DS	DOWNSPOUT
DWG	DRAWING
DWL	DOWEL
△	DELTA
E	EAST, EMPTY
EA	EACH, EXHAUST AIR
EB, EBCT	EMPTY BED CONTACT TIME
ECC	ECCENTRIC
EE	EMERGENCY EYEWASH
EDF	EGG-SHAPED DIGESTER FACILITY
EF	EACH FACE, EXHAUST FAN
EFF	EFFICIENCY, EFFICIENT
EFL	EFFLUENT
EIFS	EXTERIOR INSULATION AND FINISH SYSTEM
EL	ELEVATION
ELB	ELBOW
ELC	ELECTRICAL LOAD CENTER
ELEC	ELECTRIC, ELECTRICAL
ENGR	ENGINEER
EOP	EDGE OF PAVEMENT
ESC	EROSION AND SEDIMENT CONTROL
EP	EXPLOSION PROOF, EDGE OF PAVING

EQL	EQUAL
EQL SP	EQUALLY SPACED
EQPT	EQUIPMENT
ESC	EROSION AND SEDIMENT CONTROL
ETM	ELAPSED TIME METER
EVC	END OF VERTICAL CURVE
EW	EACH WAY
EWC	ELECTRIC WATER COOLER
EXH	EXHAUST
EXP	EXPANSION, EXPOSED
EXP AB	EXPANSION ANCHOR BOLT
EXP JT	EXPANSION JOINT
EXST, EXIST	EXISTING
EXT	EXTERIOR
°F	DEGREE FAHRENHEIT
FB	FLAT BAR
F, FU	FUSE
F, FX	FIXED
FAP	FIRE ALARM PANEL
FC	FLEXIBLE CONDUIT
FCA	FLANGED COUPLING ADAPTER
FCL2	FREE CHLORINE RESIDUAL
FCO	FLOOR CLEANOUT
FCTY	FACTORY
FD	FLOOR DRAIN
FDN	FOUNDATION
FDR	FEEDER
FEXT	FIRE EXTINGUISHER
FF	FINISHED FLOOR
FG	FINISH GRADE, FLOAT GLASS
FH	FLAT HEAD
FHY	FIRE HYDRANT
FIG	FIGURE
FL	FLOW LINE
FLG	FLANGE
FL	FLOOR
FLEX	FLEXIBLE
FLH	FLAT HEAD
FLTR	FILTER
FLUOR	FLUORESCENT
FNSH	FINISH
FOB	FLAT ON BOTTOM
FOT	FLAT ON TOP
FP	FIELD PANEL
FPM	FEET PER MINUTE
FR	FORWARD REVERSE
FRP	FIBERGLASS REINFORCED PLASTIC
FSHS	FOLDING SHOWER SEAT
FT	FOOT OR FEET
FTG	FOOTING
FU	FIXTURE UNIT
FVNR	FULL VOLTAGE NON-REVERSING
FVR	FULL VOLTAGE REVERSING
FWD	FORWARD
G, GND	GROUND
GA	GAUGE
GAL	GALLON
GALV	GALVANIZED
GB	GYPSUM BOARD
GC	GROOVED COUPLING
GCMU	GLAZED CONCRETE MASONRY UNITS
GFA	GROOVED FLANGE ADAPTER
GFI	GROUND FAULT INTERRUPTER
GFR	GROUND FAULT RELAY
GH	GREENHOUSE
GL	GLASS
GPD	GALLONS PER DAY
GPH	GALLONS PER HOUR
GPM	GALLONS PER MINUTE
GPS	GLOBAL POSITION SYSTEM
GRTG	GRATING
GSB	GYPSUM SOFFIT BOARD
GSP	GALVANIZED STEEL PIPE
GV	GATE VALVE
GVL	GRAVEL
GWB	GYPSUM WALLBOARD
GYP	GYPSUM
H	HIGH, HORN OR HOWLER
H2S	HYDROGEN SULFIDE
H.A.S.	HEADED ANCHOR STUD
HC	HOLLOW CORE WOOD
HCL	HYDROCHLORIC ACID
HDNR	HARDENER
HDNS	HARDNESS
HDR	HEADER
HDW	HARDWARE
HGL	HYDRAULIC GRADE LINE
HK	HOOK

HGT	HEIGHT
HH	HANDHOLE
HID	HIGH INTENSITY DISCHARGE
HK	HOOK
HM	HOLLOW METAL
HOA	HAND-OFF-AUTO
HOR	HAND-OFF-REMOTE
HORIZ	HORIZONTAL
HP	HORSEPOWER
HPT	HIGH POINT
HPU	HYDRAULIC POWER UNIT
HR	HOSE RACK, HANDRAIL
HV	HOSE VALVE
HVAC	HEATING, VENTILATING AND AIR CONDITIONING
HWL	HIGH WATER LEVEL
IC	INTERRUPTING CAPACITY
ID	INDUCED DRAFT, INSIDE DIAMETER
IE	INVERT ELEVATION
I.F.	INSIDE FACE
IG	INSULATING, INSULATING GLASS
IN	INCH
INCAND	INCANDESCENT
INFL	INFLUENT
INJS	INJECTIONS
INST	INSTANTANEOUS
INSTM	INSTRUMENT, INSTRUMENTATION
INSUL	INSULATION
INVT	INVERT
IP	INLET PROTECTION, INSTRUMENTATION PANEL
IRRIG	IRRIGATION
ITG	INSULATED TEMPERED GLASS
ITX	ISOLATION TRANSFORMER
IU	INTAKE UNIT
IW	IRRIGATION WELL
J	JALOUSIE
JA	JAL-AWNING
JB	JUNCTION BOX
JAN	JANITOR
JCT	JUNCTION
JT	JOINT
K	KEY GROUP, KEY INTERLOCK
KIP	THOUSAND POUNDS
KIT	KITCHEN
K-PL	KICKPLATE
KSK	KITCHEN SINK
KV	KILOVOLTS
KVA	KILOVOLT AMPERES
KVAR	KILOVOLT AMPERES REACTIVE
KW	KILOWATT
L	ANGLE, LENGTH
LA	LIGHTNING ARRESTER
LAB	LABORATORY
LAM	LAMINATE
LAT	LATITUDE
LB	POUND
LC	LIGHTING CONTACTOR
LD	COMBINATION LOUVER/DAMPER
LDG	LOADING DOCK
LEL	LOWER EXPLOSIVE LIMIT
LF	LINEAR FEET
LG	LONG
LH	LEFT HAND
LHR	LEFT HAND REVERSE
LLH	LONG LEG HORIZONTAL
LLV	LONG LEG VERTICAL
LNTL	LINTEL
LONG	LONGITUDINAL
LOS	LOCK-OUT STOP PUSHBUTTON
LP	LIGHT POLE, LIGHTING PANEL, LOCAL PANEL
LPT	LOW POINT
LR	LATCHING RELAY
LR	LOCAL-REMOTE
LR	LONG RADIUS
LS	LABORATORY SINK
LT	LEFT
LTG, LTS	LIGHTS OR LIGHTING
LTX	LIGHTING TRANSFORMER
LWL	LOW WATER LEVEL
MA	MANUAL-AUTO
MAS	MASONRY
MATL	MATERIAL
MAX	MAXIMUM
MB	MACHINE BOLT
MC	MASONRY CLEARANCE
MC	MODULATE-CLOSE
MCC	MOTOR CONTROL CENTER
MCJ	MASONRY CONTROL JOINT

MDO	MEDIUM DENSITY OVERLAY
MECH	MECHANICAL
MFD	MANUFACTURED
MFR	MANUFACTURER
MGD	MILLION GALLONS PER DAY
MH	MANHOLE, MOUNTING HEIGHT
MIN	MINUMUM
MISC	MISCELLANEOUS
MJ	MECHANICAL JOINT
MLO	MAIN LUGS ONLY
MMDW	DRY WEATHER MAXIMUM MONTH
MMP	MECHANICAL MOUNTING PANEL
MMWW	WET WEATHER MAXIMUM MONTH
MO	MANUAL OPERABLE, MASONRY OPENING
MP	METAL PANEL
MPU	MULTIPURPOSE UNIT
MS	MANUFACTURER'S STANDARD
MSC	MANUFACTURER SUPPLIED CABLE
MSR	GROUPED MOTOR CONTROL
MT	MOUNT
MTD	MOUNTED
MTG	MOUNTING
MTS	MANUAL TRANSFER SWITCH
MTS	MILL TYPE STEEL PIPE
MU	MULCHING
MV	MERCURY VAPOR
MWS	MAXIMUM WATER SURFACE
N	NORTH, NEUTRAL
NA	NOT APPLICABLE
NA	NON-AUTOMATIC
NC	NORMALLY CLOSED
NEUT	NEUTRAL
NG	NATURAL GAS
NGVD	NATIONAL GEODETIC VERTICAL DATUM
NIC	NOT IN CONTRACT
N.O.	NORMALLY OPEN
NO., #	NUMBER
NOM	NOMINAL
NP	NON-PROTECTED
NPT	NATIONAL PIPE THREADS
NS	NON-SHRINK
NTS	NOT TO SCALE
O2	OXYGEN
O TO O	OUT TO OUT
OA	OVERALL, ODOROUS AIR
OC	ON CENTER
OC	OPEN-CLOSE (O)
OCA	OPEN-CLOSE-AUTO
OCR	OPEN-CLOSE-REMOTE
OD	OUTSIDE DIAMETER, OVERFLOW DRAIN
O.F.	OUTSIDE FACE
OFCI	OWNER FURNISHED, CONTRACTOR INSTALLED
OFOI	OWNER FURNISHED, OWNER INSTALLED
OL	OVERLOAD RELAY
OO	ON-OFF
OOA	ON-OFF-AUTO
OOR	ON-OFF-REMOTE
OP	OPAQUE PANEL, OUTLET PROTECTION
OPER	OPERATOR
OPNG	OPENING
OPP	OPPOSITE
OSA	OUTSIDE AIR
OSC	OPEN-STOP-CLOSE
OSD	OPEN SITE DRAIN
OWSJ	OPEN WEB STEEL JOIST
OZ	OUNCE
P	PROJECTED
P	PILASTER, PIPE
PAVT	PAVER TILE
PB	PUSHBUTTON SWITCH
PC	POINT OF CURVE, PHOTOCELL
PC	PRECAST CONCRETE PANEL
PCCP	PRECAST CONCRETE CYLINDER PIPE
PCV	PRESSURE CONTROL VALVE
PE	PLAIN END
PED	PEDESTAL, PEDESTRIAN

PEP	POLYETHYLENE PIPE
PEN.	PENETRATION
PFC	POUNDS PER CUBIC FOOT
PH	PENTHOUSE
pH	HYDROGEN ION CONCENTRATION
PH	PHASE
PI	POINT OF INTERSECTION
PIT	PILOT TUBE TEST STATION
PJF	PREMOULDED JOINT FILLER
PL	PLATE (STEEL)
PL	PROPERTY LINE
PLAM	PLASTIC LAMINATE
PLAS	PLASTER, PLASTIC
PLC	PROGRAMMABLE LOGIC CONTROLLER
PLYWD	PLYWOOD
PNL	PANEL
PP	POWER POLE
P-P	PUSH-PULL
PPL	POLYPROPYLENE LINED
PR	PAIR
PRC	POINT OF REVERSE CURVE
PRCST	PRECAST
PREFAB	PREFABRICATION
PRES	PRESSURE
PRI	PRIMARY
PRM	PERMANENT REFERENCED MARKER
PROJ	PROJECTION
PROP	PROPERTY
PS	PLASTIC SHEET, POLYCARBONATE SHEET
PS	PAINT SYSTEM
PSF	POUNDS PER SQUARE FOOT
PSI	POUNDS PER SQUARE INCH
PSIG	POUNDS PER SQUARE INCH, GAUGE
PT	POINT OF TANGENCY
PT	POTENTIAL TRANSFORMER
PT	PRESSURE TREATED
PTD	PAPER TOWEL DISPENSER
PTN	PARTITION
PV	PLUG VALVE
PVC	POLYVINYL CHLORIDE
PVI	POINT OF VERTICAL INTERSECTION
PVMT	PAVEMENT
PVT	POINT OF VERTICAL TANGENCY
QAA	AVERAGE FLOW
QMM	MAXIMUM 30 DAY FLOW
QPI	PEAK INSTANTANEOUS FLOW
QPP	PEAK PUMPING FLOW
QT	QUARRY TILE
R	RISER
R OR RAD	RADIUS
RA	RETURN AIR
RC	REINFORCED CONCRETE
RCP	REINFORCED CONCRETE PIPE
RCPT	RECEPTACLE
RD	ROAD, ROOF DRAIN
RDCR	REDUCER
RDW	REDWOOD
RECIR	RECIRCULATION
REF	REFER OR REFERENCE
REFR	REFRIGERATE, REFRIGERANT
REINF	REINFORCED, REINFORCING, REINFORCE
REQD	REQUIRED
RESIL	RESILIENT
RFS	ROLL-UP FIRE SHUTTER
RH	RIGHT HAND
RH	RODHOLE
RHR	RIGHT HAND REVERSE
RL	RAIN LEADER
RLS	RUBBER LINED STEEL
RM	ROOM
RO	ROUGH OPENING
ROL	RAISE-OFF-LOWER
RPM	REVOLUTIONS PER MINUTE
RR	RIPRAP

RECORD DRAWINGS

Revisions Drawn By D WELLS Date 7/16/12

THESE RECORD DRAWINGS HAVE BEEN PREPARED, IN PART, ON THE BASIS OF INFORMATION COMPILED BY OTHERS. THEY ARE NOT INTENDED TO REPRESENT IN DETAIL THE EXACT LOCATION, TYPE OF COMPONENT NOR MANNER OF CONSTRUCTION. THE ENGINEER WILL NOT BE RESPONSIBLE FOR ANY ERRORS OR OMISSIONS WHICH HAVE BEEN INCORPORATED INTO THE RECORD DRAWINGS.

GENERAL ABBREVIATIONS

NOTES:

1. CONTACT ENGINEER FOR ABBREVIATIONS USED BUT NOT SHOWN ON THIS DRAWING.

GENERAL NOTE:

1. THIS IS A STANDARD LEGEND SHEET. THEREFORE, NOT ALL OF THE INFORMATION SHOWN MAY BE USED ON THIS PROJECT.

RUFUS J BRUNER, III ★ LICENSE No 35951 STATE OF FLORIDA ★ PROFESSIONAL ENGINEER

NO.	DATE	REVISION	BY	APVD

DSGN	DR	CHK	APVD
R BRUNER	K RINER	KR CHANG	R BRUNER

3011 SW WILLISTON RD
GAINESVILLE, FLORIDA 32608
EB0000072 AAC001992
Rufus J Bruner, III PE 35951

CH2MHILL

SOLID WASTE SYSTEM
UPGRADE DESIGN
PASCO COUNTY
PASCO COUNTY, FLORIDA

GENERAL

ABBREVIATIONS
SHEET 1

VERIFY SCALE
BAR IS ONE INCH ON ORIGINAL DRAWING.
0 1"

DATE	AUGUST 2012
PROJ	378217
DWG	00-G-003
SHEET	

REUSE OF DOCUMENTS: THIS DOCUMENT, AND THE IDEAS AND DESIGNS INCORPORATED HEREIN, AS AN INSTRUMENT OF PROFESSIONAL SERVICE, IS THE PROPERTY OF CH2M HILL AND IS NOT TO BE USED, IN WHOLE OR IN PART, FOR ANY OTHER PROJECT WITHOUT THE WRITTEN AUTHORIZATION OF CH2MHILL.
©CH2M HILL 2010. ALL RIGHTS RESERVED.

RECORD DRAWINGS FOR PERMIT

ABBREVIATIONS

RRUB	RADIAL RUBBER
RS	RIGID STEEL
RST	REINFORCING STEEL
RT	RIGHT
RTN	RETURN
RTO	REGENERATIVE THERMAL OXIDIZER
RUB	RUBBER
RUBC	RUBBER CUSHIONED FLOORING
RUBS	RUBBER ESD CONTROL FLOORING
R/W	RIGHT OF WAY
S	I-BEAM
S	SLOPE, SOUTH, SWITCH
SA	SUPPLY AIR
SATC	SUSPENDED ACCUSTICAL TILE CEILING
SB	SEDIMENT BASIN
SC	SHOWER CURTAIN, SOLID CORE WOOD
SCADA	SUPERVISORY CONTROL AND DATA ACQUISITION
SCC	SOLID CORE
SCFM	STANDARD CUBIC FEED PER MINUTE
SCHED	SCHEDULE
SCU	SPEED CONTROL UNIT
SDP	SUB-DISTRIBUTION PANEL
SDWK	SIDEWALK
SEC	SECONDARY
SECT	SECTION
SED	SEDIMENTATION
SEW	SEWAGE
SG	LAMINATED SAFETY GLASS, SAFETY
SGWB	SUSPENDED GYPSUM WALL BOARD
SH	SHEET
SHA	SURFACE HARDENING AGENT
SHS	SOLIDS HANDLING SYSTEM
SIM	SIMILAR
SK	SINK
SLR	SEALER
SMLS	SEAMLESS EPOXY
SOI	SPRAY- ON INSULATION
SOLN	SOLUTION
SP	SPACE OR SPACES, SPANDREL PANEL, STORMPROOF
SPEC, SPECS	SPECIFICATIONS
SPD	SUMP PUMP DISCHARGE
SPG	SPACING
SPLY	SUPPLY
SQ	SQUARE
SQ FT	SQUARE FOOT, FEET
SQ IN	SQUARE INCH
SR	SHORT RADIUS
SS	START-STOP
SST	STAINLESS STEEL
SSC	SUPERVISORY SET POINT CONTROL
ST	STORM DRAIN
ST	STRAIGHT
STA	STATUS, STATION
STD	STANDARD
STIF	STIFFENER
STIRR	STIRRUP
STL	STEEL
STRL	STRUCTUAL
STRUCT	STRUCTURE
SUBFL	SUBFLOOR
SUSP	SUSPENDED
SV	SOLENOID VALVE
SVIN	SHEET VINYL
SWBD	SWITCHBOARD
SWGR	SWITCHGEAR
SYMM	SYMMETRICAL
T	THERMOSTAT, TREAD
T&B	TOP AND BOTTOM
T&G	TONGUE AND GROOVE
TA	TRANSFER AIR
TAN	TANGENT
TB	TERMINAL BOARD
TBG	TUBING
TC	TIME TO CLOSE
TC	TURBIDITY CURTAIN
TCAD	TIME CLOSE AFTER DE-ENERGIZATION
TCAE	TIME CLOSE AFTER ENERGIZATION
TDH	TOTAL DYNAMIC HEAD
TDR	TIME DELAY RELAY
TECH	TECHNICAL
TEL	TELEPHONE
TEMP	TEMPORARY, TEMPERATURE
TF	TOP FACE
TFG	TEMPERED FLOAT GLASS
TG	TEMPERED
TH	TOP-HINGED
THD	THREAD
THK	THICKNESS
THRU	THROUGH
TJB	TERMINAL JUNCTION BOX
TL	TEFLON LINED PIPE
T.O.	TIME TO OPEN, TOP OF
TOAE	TIME OPEN AFTER ENERGIZATION
TOC	TOP OF CONCRETE
TOC	TOP OF CURB
TOD	TIME ON DELAY, TOP OF DUCT
	TOTAL OXYGEN DEMAND
TOF	TOP OF FOOTING
TOG	TOP OF GROUT, TOP OF GRATE
T.O.P.	TOP OF PARAPET
TOS	TOP OF SLAB
TOW	TOP OF WALL
TP	TURNING POINT
TR	TRANSOM, TRUSS
TRANS	TRANSFORMER, TRANSITION
TRANSV	TRANSVERSE
TRD	TREAD
TS	TEMPORARY SEEDING, TUBE STEEL
TSHT	THRESHOLD
TSS	TOTAL SUSPENSION SOLIDS
TST	TOP OF STEEL
TTC	TELEPHONE TERMINAL CABINET
TTD	TOILET TISSUE DISPENSER
TU-X	TREATMENT UNIT NO. X
TURB	TURBIDITY
TWP	TRANSLUCENT WALL PANEL
TX	TRANSFORMER
TYP	TYPICAL
UON	UNLESS OTHERWISE NOTED
UNO	UNLESS NOTED OTHERWISE
UPS	UNINTERRUPTIBLE POWER SUPPLY
USB	UNIT SUBSTATION
UVR	UNDER VOLTAGE RELAY
V	VENT, VALVE
V	VOLTMETER, VOLTS
VB	VAPOR BARRIER (RETARDER)
VC	VERTICAL CURVE
VCP	VITRIFIED CLAY PIPE
VCT	VINYL COMPOSITION TILE
VEL	VELOCITY
VERT	VERTICAL
VHC	VOLATILE HYDROCARBONS
VIB	VIBRATION
VIF	VERIFY IN FIELD
VIN	VINYL
VINT, VT	VINYL TILE
VP	VERTICAL PIVOTED
VPS	VENEER PLASTER SYSTEM
VPC	POINT OF VERTICAL CURVATURE
VPI	POINT OF VERTICAL INTERSECTION
VPT	POINT OF VERTICAL TANGENT
VS	VERTICAL SLIDE
VTR	VENT THRU ROOF
VWC	VINYL WALL COVERING
W	WEST
W/	WITH
WC	WATER COLUMN
WDW	WASH DOWN WATER
WEASTRIP	WEATHERSTRIP
WG	WIRE, WIRE GLASS
WH	WATTHOUR METER
WHD	WATTHOUR DEMAND METER
WP	WATERPROOF, WEATHERPROOF, WORKPOINT
WR	WASTE RECEPTACLE
WRB	WATER RESISTANT GWB
WS	WATER SURFACE, WATERSTOP, WELDED STEEL
WWF	WELDED WIRE FABRIC
WWPH	WET WEATHER PEAK HOUR

NOTES:

1. CONTACT ENGINEER FOR ABBREVIATIONS USED BUT NOT SHOWN ON THIS DRAWING.

SECTION / DETAIL DESIGNATIONS

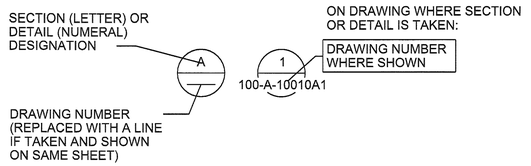

DRAWING TITLE
SCALE

ON DRAWING WHERE ONLY A TITLE IS REQUIRED WITH NO REFERENCE (eg: ELEVATIONS)

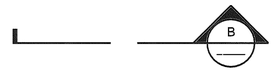

SECTION CALLOUT WHERE SECTION IS ON THE SAME SHEET AND CUT EXTENDS TO A FIXED LIMIT

SECTION CALLOUT WHERE SECTION IS ON ANOTHER SHEET AND CUT EXTENDS THROUGHOUT ENTIRE SHEET

GRID LINE INDICATOR

KEYNOTE NUMBER

REVISION / ADDENDA NUMBER

NORTH ARROW; CAN BE MODIFIED TO INCLUDE MAGNETIC NORTH ALONG WITH PROJECT NORTH

DESIGN DETAIL DESIGNATION

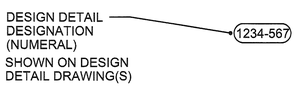

NOTES:

1. ALL DESIGN DETAILS ARE TYPICAL AND MUST BE USED IF DESIGN DETAIL DESIGNATION IS NOT SHOWN
2. THE TERM STANDARD DETAIL, OR A FORM OF IT, IS SYNOMONOUS WITH DESIGN DETAIL AND REFERS TO THE DESIGN DETAILS FOUND IN THIS SET OF CONTRACT DOCUMENTS.
3. THE DESIGN DETAILS REPRESENT THE CHARACTER AND NATURE OF THE WORK REQUIRED THROUGHOUT THE PROJECT. ALL ASSOCIATED WORK SHALL BE IN ACCORDANCE WITH THE DESIGN DETAILS SHOWN WHETHER THE DETAILS ARE SPECIFICALLY REFERENCED OR NOT.

COLUMN GRID SYSTEM

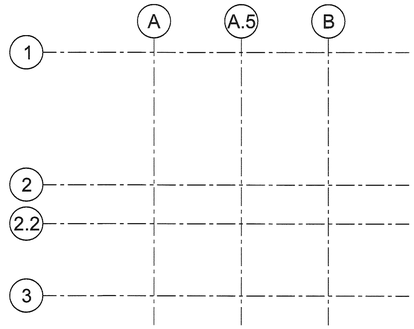

WHEN TO USE?
IF THERE ARE BUILDING COLUMNS, IF IT IS A VERY LARGE BUILDING, OR IF THERE ARE A LOT OF VARIATIONS OR BUMPOUTS (CORNERS) IN THE BUILDING.

USE LETTERS FOR THE LEAST NUMBER OF BAYS AND USE NUMBERS FOR THE MOST NUMBER OF BAYS.

AVOID USING LETTERS SUCH AS "I", "O" AND "Q".

START WITH WHOLE NUMBERS AND LETTERS. USE DECIMAL PLACES (B.5, 2.2) IF GRIDS ARE ADDED OR IF A GRID NEEDS TO BE VERY CLOSE TO ANOTHER GRID

RECORD DRAWINGS

Revisions Drawn By D WELLS Date 7/16/12

THESE RECORD DRAWINGS HAVE BEEN PREPARED, IN PART, ON THE BASIS OF INFORMATION COMPILED BY OTHERS. THEY ARE NOT INTENDED TO REPRESENT IN DETAIL THE EXACT LOCATION, TYPE OF COMPONENT NOR MANNER OF CONSTRUCTION. THE ENGINEER WILL NOT BE RESPONSIBLE FOR ANY ERRORS OR OMISSIONS WHICH HAVE BEEN INCORPORATED INTO THE RECORD DRAWINGS.

GENERAL NOTE:

1. THIS IS A STANDARD LEGEND SHEET. THEREFORE, NOT ALL OF THE INFORMATION SHOWN MAY BE USED ON THIS PROJECT.

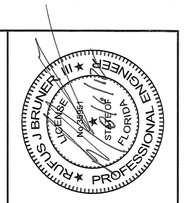

NO.	DSGN	DATE	DR	REVISION	CHK	APVD	BY	APVD
	R BRUNER		K RINER		KR CHANG		R BRUNER	

©CH2M HILL 2010. ALL RIGHTS RESERVED.
REUSE OF DOCUMENTS: THIS DOCUMENT, AND THE IDEAS AND DESIGNS INCORPORATED HEREIN, AS AN INSTRUMENT OF PROFESSIONAL SERVICE, IS THE PROPERTY OF CH2M HILL AND IS NOT TO BE USED, IN WHOLE OR IN PART, FOR ANY OTHER PROJECT WITHOUT THE WRITTEN AUTHORIZATION OF CH2MHILL.

3011 SW WILLISTON RD
GAINESVILLE, FLORIDA 32608
EB0000072 AAC001992
Rufus J Bruner, III PE 35951

SOLID WASTE SYSTEM
UPGRADE DESIGN
PASCO COUNTY
PASCO COUNTY, FLORIDA

CH2MHILL

GENERAL

ABBREVIATIONS
SHEET 2

VERIFY SCALE

BAR IS ONE INCH ON ORIGINAL DRAWING.
0 1"

DATE	AUGUST 2012
PROJ	378217
DWG	00-G-003A
SHEET	

RECORD DRAWINGS FOR PERMIT

GENERAL SITE NOTES:

1. ALL CONSTRUCTION MATERIAL, INSTALLATION AND TESTING SHALL CONFORM TO THE STANDARD SPECIFICATIONS OF PASCO COUNTY.
2. DRAINAGE CONVEYANCE SYSTEMS, I.E. SWALES, DITCHES, STORM SEWERS, CURB AND GUTTERS, SHALL BE IN COMPLIANCE WITH THE THE FLORIDA DEPARTMENT OF TRANSPORTATION STANDARD FOR ROAD AND BRIDGE CONSTRUCTION, LATEST EDITION.
3. ALL PAVEMENT SUBGRADE, BASE COURSE AND WEARING SURFACE MATERIAL AND INSTALLATION SHALL COMPLY WITH THE LATEST EDITION OF THE FLORIDA DEPARTMENT OF TRANSPORTATION STANDARD SPECIFICATION FOR ROAD AND BRIDGE CONSTRUCTION AND IN ACCORDANCE WITH THE REQUIREMENTS OF PASCO COUNTY.
4. SOURCE OF TOPOGRAPHY SHOWN ON THE CIVIL PLANS ARE BASE ON THE ORIGINAL SURVEY FILES FROM CH2M HILL DATED SEPTEMBER 2008.
5. EXISTING TOPOGRAPHY, STRUCTURES, AND SITE FEATURES ARE SHOWN SCREENED AND/OR LIGHT-LINED. NEW FINISH GRADE, STRUCTURES, AND SITE FEATURES ARE SHOWN HEAVY-LINED.
6. HORIZONTAL DATUM: THE SURVEY AND ASSOCIATED DRAWINGS ARE NOT IN A SPECIFIC DATUM. USE THE CONTROL POINT COORDINATES THAT ARE SHOWN ON THE DRAWINGS FOR HORIZONTAL CONTROL.
7. VERTICAL DATUM: NAVD 1988.
8. MAINTAIN, RELOCATE, OR REPLACE EXISTING SURVEY MONUMENTS, CONTROL POINTS, AND STAKES WHICH ARE DISTURBED OR DESTROYED. PERFORM THE WORK TO PRODUCE THE SAME LEVEL OF ACCURACY AS THE ORIGINAL MONUMENT(S) IN A TIMELY MANNER, AND AT THE CONTRACTOR'S EXPENSE.
9. COORDINATES AND DIMENSIONS SHOWN FOR ROADWAY IMPROVEMENTS ARE TO FACE OF CURB OR EDGE OF PAVEMENT.
10. ELEVATIONS GIVEN ARE TO FINISH GRADE UNLESS OTHERWISE SHOWN.
11. SLOPE UNIFORMLY BETWEEN CONTOURS AND SPOT ELEVATIONS SHOWN.
12. ALL DISTURBED AREAS NOT RECEIVING A HARD SURFACE SHALL BE SODDED WITH BAHIA PER THE PLANS AND SPECIFICATIONS.
13. CONTRACTOR SHALL BE RESPONSIBLE FOR IMPLEMENTING AND MAINTAINING EROSION CONTROL DEVICES DURING CONSTRUCTION. ADDITIONAL CONTROL MEASURES MAY BE REQUIRED BEYOND THOSE PRESENTED ON THE PLANS.
14. CONTRACTOR IS RESPONSIBLE FOR OBTAINING A NPDES GENERAL PERMIT FOR STORMWATER DISCHARGES FOR SMALL CONSTRUCTION ACTIVITIES. AS PART OF THE NPDES PERMIT, THE CONTRACTOR SHALL PREPARE A STORMWATER POLLUTION PREVENTION PLAN.
15. COORDINATE POINTS FOR DRAINAGE STRUCTURES ARE TO CENTER OF INLET AND FLOW LINE OF MITERED END SECTION.
16. NO DEWATERING IS EXPECTED FOR CONSTRUCTION. HOWEVER, IF DEWATERING GROUNDWATER INTO ONSITE STORMWATER MANAGMENT PONDS IS PROPOSED BY THE CONTRACTOR, A PERMIT DETERMINATION FROM FDEP'S INDUSTRIAL WASTE (IW) DEPARTMENT MAY BE REQUIRED. CONTACT MAURYN McDONALD, P.E. AT EXTENTION 402 FOR A DETERMINATION.

CONSTRUCTION WATER MANAGEMENT PLAN

1. THIS PLAN INDICATES THE MINIMUM EROSION AND SEDIMENT CONTROL MEASURES REQUIRED FOR THIS PROJECT. THE CONTRACTOR IS RESPONSIBLE FOR MEETING ALL APPLICABLE RULES, REGULATIONS AND WATER QUALITY GUIDELINES AND MAY NEED TO INSTALL ADDITIONAL CONTROLS.
2. THE CONTRACTOR IS RESPONSIBLE FOR FOLLOWING THE BEST EROSION AND SEDIMENT CONTROL PRACTICES AS OUTLINED IN THE PLANS, SPECIFICATIONS, AND APPLICABLE PERMIT(S) FOR THIS PROJECT.
3. FOR ADDITIONAL INFORMATION ON SEDIMENT AND EROSION CONTROL, REFER TO "THE FLORIDA DEVELOPMENT MANUAL - A GUIDE TO SOUND LAND AND WATER MANAGEMENT" FROM THE STATE OF FLORIDA DEPARTMENT OF ENVIRONMENTAL REGULATION (FDER), CHAPTER 6.
4. CONTRACTOR SHALL APPLY FOR AND COMPLY WITH GENERIC PERMIT FOR STORM WATER DISCHARGE FROM LARGE AND SMALL CONSTRUCTION SITES FROM THE FLORIDA DEPARTMENT OF ENVIRONMENTAL PROTECTION. THE CONTRACTOR SHALL PAY THE FEE.
5. EROSION AND SEDIMENT CONTROL BARRIERS SHALL BE PLACED ADJACENT TO ALL WETLAND AREAS WHERE THERE IS POTENTIAL FOR DOWNSTREAM WATER QUALITY DEGRADATION.
6. SILT FILTER FENCE WITHOUT WIRE REINFORCMENT SHALL BE USED UNLESS OTHERWISE SPECIFIED IN CONSTRUCTION DOCUMENTS.
7. ANY DISCHARGE FROM DEWATERING ACTIVITY SHALL BE FILTERED AND CONVEYED TO THE WETLAND IN A MANNER WHICH PREVENTS EROSION AND TRANSPORTATION OF SUSPENDED SOLIDS TO THE RECEIVING OUTFALL.
8. ALL EXCAVATIONS AND EARTHWORK SHALL BE ACCOMPLISHED TO MINIMIZE WATER TURBIDITY AND POLLUTION. DISCHARGE SHALL BE CONTROLLED AND REROUTED THROUGH SILTATION FILTERS AND SUMPS. THE CONTRACTOR SHALL BE RESPONSIBLE FOR THE PREVENTION, CORRECTION, CONTROL AND ABATEMENT OF EROSION AND WATER POLLUTION IN ACCORDANCE WITH CHAPTER 62-302, FLORIDA ADMINISTRATIVE CODE.
9. THE FILTER BARRIER SHALL BE ENTRENCHED AND BACKFILLED. AFTER THE BARRIERS ARE PLACED, THE EXCAVATED SOIL SHALL BE BACKFILLED AND COMPACTED AGAINST THE FILTER BARRIER.
10. BARRIERS SHALL BE INSPECTED IMMEDIATELY AFTER EACH RAINFALL AND AT LEAST DAILY DURING PROLONGED RAINFALL.
11. CLOSE ATTENTION SHALL BE PAID TO THE REPAIR OF DAMAGED BARRIERS, END RUNS AND UNDERCUTTING.
12. NECESSARY REPAIRS TO BARRIERS OR REPLACEMENT SHALL BE ACCOMPLISHED PROMPTLY.
13. SEDIMENT DEPOSITS SHOULD BE REMOVED AFTER EACH RAINFALL. THEY MUST BE REMOVED WHEN THE LEVEL OF DEPOSITION REACHES APPROXIMATELY ONE-HALF THE HEIGHT OF THE BARRIER.
14. ANY SEDIMENT DEPOSITS REMAINING IN PLACE AFTER THE BARRIER IS NO LONGER REQUIRED SHALL BE DRESSED TO CONFORM TO THE EXISTING GRADE, PREPARED AND SEEDED.
15. SHOULD THE FABRIC ON A SILT FENCE OR FILTER BARRIER DECOMPOSE OR BECOME INEFFECTIVE PRIOR TO THE END OF THE EXPECTED USABLE LIFE AND THE BARRIER IS STILL NECESSARY, THE FABRIC SHALL BE REPLACED PROMPTLY.
16. ADDITIONAL PROTECTION - ON-SITE PROTECTION MUST BE PROVIDED THAT WILL NOT PERMIT SILT TO LEAVE THE PROJECT CONFINES DUE TO UNFORESEEN CONDITIONS OR ACCIDENTS NOT ADDRESSED IN THESE DOCUMENTS.
17. ALL DISTURBED AREAS TO BE STABILIZED THROUGH COMPACTION, SILT SCREENS, AND GRASSING.
18. THE CONTRACTOR IS RESPONSIBLE FOR THE REMOVAL OF ANY SEDIMENT THAT LEAVES THE SITE AND CHANGES ANY DOWNSTREAM CONDITIONS BY RAISING CHANNEL BOTTOMS AND/OR CLOGGING OUTFALL CULVERTS.
19. THE CONTRACTOR IS RESPONSIBLE FOR REMOVING SILT FROM SITE IF NOT REUSABLE ON-SITE AND ASSURING PLAN ALIGNMENT AND GRADE IN ALL DITCHES AND SWALES AT COMPLETION OF CONSTRUCTION.
20. CONTRACTOR SHALL ENSURE THAT ALL DRAINAGE STRUCTURES, PIPES, ETC., ARE CLEANED OUT AND WORKING PROPERLY AT TIME OF ACCEPTANCE.
21. THE SITE CONTRACTOR IS RESPONSIBLE FOR REMOVING THE DEWATERING, TEMPORARY EROSION AND SEDIMENT CONTROL DEVICES AFTER COMPLETION OF CONSTRUCTION AND ONLY WHEN AREAS HAVE BEEN STABILIZED WITH VEGETATION OR OTHER PERMENANT EROSION CONTROL METHODS.
22. THE CONTRACTOR SHALL PAY FOR ANY WATER QUALITY CONTROL VIOLATIONS FROM ANY AGENCY THAT RESULTS IN FINES BEING ASSESSED TO THE OWNER BECAUSE OF THE CONTRACTOR'S FAILURE TO ELIMINATE TURBID RUNOFF FROM LEAVING THE SITE AND RAISING BACKGROUND LEVELS ABOVE EXISTING BACKGROUND LEVEL.
23. IN THE EVENT THAT THE EROSION CONTROL MEASURES SHOWN BECOME DAMAGED OR ARE INSUFFICIENT TO PROTECT THE WATERS OF THE STATE, THE CONTRACTOR SHALL INSTALL ADDITIONAL MEASURES.

RECORD DRAWINGS

Revisions Drawn By D WELLS Date 7/16/12

THESE RECORD DRAWINGS HAVE BEEN PREPARED, IN PART, ON THE BASIS OF INFORMATION COMPILED BY OTHERS. THEY ARE NOT INTENDED TO REPRESENT IN DETAIL THE EXACT LOCATION, TYPE OF COMPONENT NOR MANNER OF CONSTRUCTION. THE ENGINEER WILL NOT BE RESPONSIBLE FOR ANY ERRORS OR OMISSIONS WHICH HAVE BEEN INCORPORATED INTO THE RECORD DRAWINGS.

YARD PIPING LEGEND

EXISTING	THIS CONTRACT	
8" PE	8" PE	NOMINAL PIPE DIAMETER PIPE USE IDENTIFICATION
		PIPING < 30" DIAMETER
		PIPING ≧ 30" DIAMETER
		EXISTING PIPE TO BE ABANDONED
		EXISTING PIPE TO BE REMOVED
		NON-FREEZE HOSE VALVE (V-X) X = NO. IN SPECIFICATIONS
		NON-FREEZE HOSE VALVE WITH HOSE RACK (V-X) X = NO. IN SPECIFICATIONS
		INDICATOR POST VALVE
		GATE VALVE AND VALVE BOX
		BUTTERFLY VALVE AND VALVE BOX
		PLUG VALVE AND VALVE BOX
		FLEXIBLE COUPLING
		90° ELBOW UP
		90° ELBOW DOWN
		BEND < 90° UP
		BEND < 90° DOWN
		CONCENTRIC REDUCER
		CAP OR PLUG
		CLEANOUT
		FIRE HYDRANT

CIVIL LEGEND

*EXISTING INFRASTRUCTURE SHOWN SCREENED

⊗ 158.5	SPOT ELEVATION
155	CONTOUR LINE
3:1	EMBANKMENT AND SLOPE
	DRAINAGEWAY OR DITCH
	INLET
	OUTFALL
OR	SIGN
	POST OR GUARD POST
	BENCH MARK
	BRUSH/TREE LINE
	TREE
	PROPERTY LINE
	CENTER LINE, BUILDING, ROAD, ETC.
	FUTURE ROAD OR STRUCTURES
N 1000.00 E 1000.00	STRUCTURE, BUILDING OR FACILITY LOCATION POINT - COORDINATES
⊕ B-1	BORING LOCATION AND NUMBER
OR	DEMOLITION
OR	STRUCTURE, BUILDING OR FACILITY
	ASPHALT CONCRETE PAVEMENT
	GRAVEL SURFACING
	CONCRETE PAVEMENT
	CURB
	SINGLE SWING GATE
	DOUBLE SWING GATE
	SLIDING GATE
	CHAIN LINK FENCE
	SILT FENCE

SECTION AND DETAIL IDENTIFICATION

SECTION AND DETAIL DESIGNATORS

SECTION (LETTER) OR DETAIL (NUMBER) DESIGNATION

A
10-A-1

DRAWING NUMBER WHERE DETAIL CAN BE FOUND

ON DRAWING WHERE DETAIL IS DRAWN:

DETAIL DESIGNATED A — UNTITLED
SCALE: AS DESIGNATED

STANDARD DETAIL DESIGNATION

STANDARD DETAIL 1234-567

AS INDICATED (SEE DETAIL DRAWINGS)

GENERAL NOTE:

1. THIS IS A STANDARD LEGEND SHEET. THEREFORE, NOT ALL OF THE INFORMATION SHOWN MAY BE USED ON THIS PROJECT.

3011 SW WILLISTON RD
GAINESVILLE, FLORIDA 32608
EB0000072 AAC001992
Richard Thomas Morrison PE 67713

SOLID WASTE SYSTEM
UPGRADE DESIGN
PASCO COUNTY
PASCO COUNTY, FLORIDA

CH2MHILL

GENERAL
CIVIL NOTES AND LEGEND

NO.	DATE	DSGN	DR	CHK	REVISION	BY	APVD
		R MORRISON	C CHILDRESS	C KOHLER	APVD	R MORRISON	

VERIFY SCALE
BAR IS ONE INCH ON ORIGINAL DRAWING.
0 1"

DATE	AUGUST 2012
PROJ	378217
DWG	00-G-004
SHEET	

©CH2M HILL 2010. ALL RIGHTS RESERVED.
REUSE OF DOCUMENTS: THIS DOCUMENT, AND THE IDEAS AND DESIGNS INCORPORATED HEREIN, AS AN INSTRUMENT OF PROFESSIONAL SERVICE, IS THE PROPERTY OF CH2M HILL AND IS NOT TO BE USED, IN WHOLE OR IN PART, FOR ANY OTHER PROJECT WITHOUT THE WRITTEN AUTHORIZATION OF CH2MHILL.

RECORD DRAWINGS FOR PERMIT

DESIGN CRITERIA

1. APPLICABLE CODE: 2007 FLORIDA BUILDING CODE (FBC), AS AMENDED BY LOCAL AGENCIES.
2. REFER TO THE DRAWINGS FOR ADDITIONAL AND SPECIFIC STRUCTURE LOADINGS AND REQUIREMENTS.
3. LIVE LOADS:
   - OFFICE FLOOR 125 PSF
   - STAIRS 100 PSF
   - ROOF 25 PSF
4. WIND LOAD:
   FBC WIND PRESSURE
   - MPH WIND SPEED = 120 MPH (3-SEC GUST)
   - EXPOSURE = C
   - I = 1.15
5. SOIL DESIGN PARAMETERS:
   A. NET ALLOWABLE SOIL BEARING PRESSURES: 2000 PSF
   B. EQUIVALENT DRAINED FLUID PRESSURES:
      - ACTIVE: 39 PCF
      - AT REST: 58 PCF
      - PASSIVE: 345 PCF
   C. VERTICAL SURCHARGE: 200 PSF TRAFFIC LOAD
   D. COEFFICIENT OF FRICTION:
   E. NATIVE SOIL UNIT WEIGHT: 115 PCF
   F. DESIGN GROUND WATER ELEVATION:
      SOIL FRICTION AND WEDGE FAILURE NOT CONSIDERED IN UPLIFT RESISTANCE:
      NORMAL HIGH GWT WITH UPLIFT (FS=1.10): EL. AT GRADE FOR EAST PASCO SITE AND 6' BELOW GRADE FOR WEST PASCO SITE
      100 YEAR FLOOD EL. = N/A

GENERAL INFORMATION

1. FOR ABBREVIATIONS NOT LISTED, SEE ASME Y14.38 "ABBREVIATIONS AND ACRONYMS" PUBLICATION AS DISTRIBUTED BY THE AMERICAN SOCIETY OF MECHANICAL ENGINEERS (ASME).
2. DESIGN DETAILS ARE INTENDED TO BE TYPICAL AND SHALL APPLY TO SIMILAR SITUATIONS OCCURRING THROUGHOUT THE PROJECT, WHETHER OR NOT THEY ARE INDIVIDUALLY CALLED OUT.
3. VERIFY OPENING DIMENSIONS IN WALLS, SLABS, AND DECKS WITH OTHER DISCIPLINE DRAWINGS.
4. FOR NUMBER, TYPE, SIZE, ARRANGEMENT, AND/OR LOCATION OF EQUIPMENT PADS SEE OTHER DISCIPLINE DRAWINGS. COORDINATE WITH EQUIPMENT SUPPLIER PRIOR TO PLACING SLABS, WALLS AND FOUNDATIONS. COORDINATE PIPING OPENINGS WITH OTHER DISCIPLINE DRAWINGS.
5. CUT NO STRUCTURAL MEMBERS FOR PIPES, DUCTS, ETC, UNLESS SPECIFICALLY DETAILED OR APPROVED IN WRITING BY THE ENGINEER.
6. VISITS TO THE JOB SITE BY THE ENGINEER TO OBSERVE THE CONSTRUCTION DO NOT IN ANY WAY MEAN THAT ENGINEER IS GUARANTOR OF CONSTRUCTOR'S WORK, NOR RESPONSIBLE FOR THE COMPREHENSIVE OR SPECIAL INSPECTIONS, COORDINATION, SUPERVISION, NOR SAFETY AT THE JOB SITE.
7. SPECIFIED CONCRETE AND MASONRY TESTING DURING CONSTRUCTION SHALL BE OWNER FURNISHED. SPECIFIED LABORATORY TEST MIXES SHALL BE THE RESPONSIBILITY OF THE CONTRACTOR.

FOUNDATIONS

1. REFER TO GEOTECHNICAL REPORT BY CH2MHILL GEOTECHNICAL INVESTIGATION FOR THIS PROJECT DATED 2008
2. EXCAVATION SHALL BE SHORED TO PREVENT SUBSIDENCE OR DAMAGE TO ADJACENT STRUCTURES.
3. ALL FOUNDATION SLABS, SLABS-ON-GRADE AND WALL AND COLUMN FOUNDATIONS SPECIFICALLY NOTED TO BE ON FILL SHALL BEAR ON COMPACTED GRANULAR FILL AS SPECIFIED.
4. ALL COLUMN AND WALL FOOTING AND FOUNDATION MAT SLABS SHALL BE CAST ON FIRM COMPACTED SOILS, UNLESS NOTED OTHERWISE.
5. ALL FOUNDATION BEARING SURFACES SHALL BE INSPECTED BY THE GEOTECHNICAL ENGINEER PRIOR TO PLACEMENT OF REINFORCING STEEL.
6. NO BACKFILL SHALL BE PLACED BEHIND WALLS UNTIL THE CONCRETE HAS ATTAINED 100 PERCENT OF IT'S SPECIFIED COMPRESSIVE STRENGTH.

FORMWORK, SHORING AND BRACING

1. STRUCTURES SHOWN ON THE DRAWINGS HAVE BEEN DESIGNED FOR STABILITY UNDER FINAL CONDITIONS ONLY. DESIGN SHOWN DOES NOT INCLUDE NECESSARY COMPONENTS OR EQUIPMENT FOR STABILITY OF THE STRUCTURES DURING CONSTRUCTION. CONTRACTOR IS RESPONSIBLE FOR ALL WORK RELATING TO CONSTRUCTION ERECTION METHODS, BRACING, SHORING, RIGGING, GUYS, SCAFFOLDING, FORMWORK, AND OTHER WORK AIDS REQUIRED TO SAFELY PERFORM THE WORK SHOWN.
2. TEMPORARY SHORING SHALL REMAIN IN PLACE UNTIL ELEVATED CONCRETE FLOOR OR SLABS HAVE REACHED 28 DAY DESIGN STRENGTH AS DETERMINED BY CYLINDER BREAKS.

CONCRETE REINFORCING

1. MINIMUM REINFORCING FOR ALL CONCRETE WALLS AND SLABS SHALL BE AS FOLLOWS:

WALL OR SLAB THICKNESS	REINF EACH WAY	LOCATION
6"	#4@12"	CENTERED
8"	#5@12"	CENTERED
10"	#4@12"	EACH FACE
12"	#5@12"	EACH FACE

   PROVIDE LARGER SIZES AND MORE REINFORCING IN SECTIONS OF CONCRETE WHERE REQUIRED BY THE DETAILS ON THE DRAWINGS OR BY THE SPECIFICATIONS.
2. CLEARANCE FOR REINFORCEMENT BARS, UNLESS SHOWN OTHERWISE, SHALL BE:
   - WHEN PLACED ON GROUND: 3"
   - INTERIOR, FINISHED, HUMIDITY CONTROLLED AREAS:
     - WALLS, SLABS AND JOISTS 3/4"
     - BEAM STIRRUPS AND COLUMN TIES 1 1/2"
   - ALL OTHER CONCRETE SURFACES: 2"
3. 90 DEGREE BENDS, UNLESS OTHERWISE SHOWN, SHALL BE ACI 318 STANDARD HOOKS.
4. WALL CORNER AND WALL INTERSECTION REINFORCEMENT BARS SHALL BE CONTINUOUS AROUND CORNERS AND THROUGH COLUMNS OR PILASTERS. REINFORCEMENT SHALL BE EXTENDED INTO CONNECTING WALLS AND LAPPED ON THE OPPOSITE FACE OF THE CONNECTING WALLS, AS INDICATED IN DETAIL (0330-003).
5. LAP VERTICAL WALL BARS WITH DOWELS FROM BASE SLABS AND EXTEND INTO TOP FACE OF ROOF SLABS AND LAP WITH TOP SLAB REINFORCEMENT. PROVIDE A MINIMUM OF FOUR FULL HEIGHT VERTICAL BARS WITH MATCHING DOWELS AT WALL ENDS, CORNERS AND INTERSECTIONS WITH SIZE TO MATCH TYPICAL VERTICAL REINFORCING STEEL SHOWN OR REQUIRED BY NOTES ABOVE.
6. LOCATE SLAB AND BEAM TOP BAR SPLICES AT MIDSPAN AND BOTTOM BAR SPLICES AT SUPPORTS.

   REINFORCEMENT BENDS AND LAPS, UNLESS OTHERWISE NOTED, SHALL SATISFY THE FOLLOWING MINIMUM REQUIREMENTS:

GRADE 60 REINFORCING STEEL										
BAR SIZE		#3	#4	#5	#6	#7	#8	#9	#10	#11
LAP SPLICE LENGTH										
SPACING<6"	TOP BAR ⌿	1'-4"	2'-0"	3'-0"	4'-0"	5'-10"	6'-8"	7'-7"	8'-6"	9'-5"
	OTHER BAR	1'-4"	1'-7"	2'-4"	3'-1"	4'-6"	5'-2"	5'-10"	6'-7"	7'-3"
SPACING≥6"	TOP BAR ⌿	1'-4"	1'-8"	2'-0"	2'-5"	3'-6"	4'-0"	5'-0"	6'-2"	7'-5"
	OTHER BAR	1'-4"	1'-4"	1'-7"	1'-10"	2'-9"	3'-1"	3'-10"	4'-9"	5'-8"
EMBEDMENT LENGTH										
SPACING<6"	TOP BAR ⌿	1'-0"	1'-7"	2'-4"	3'-1"	4'-6"	5'-2"	5'-10"	6'-7"	7'-3"
	OTHER BAR	1'-0"	1'-3"	1'-9"	2'-5"	3'-6"	4'-0"	4'-6"	5'-1"	5'-7"
SPACING≥6"	TOP BAR ⌿	1'-0"	1'-3"	1'-7"	1'-10"	2'-9"	3'-1"	3'-10"	4'-9"	5'-8"
	OTHER BAR	1'-0"	1'-0"	1'-3"	1'-5"	2'-1"	2'-5"	3'-0"	3'-8"	4'-5"

TOP BARS SHALL BE DEFINED AS ANY HORIZONTAL BARS PLACED SUCH THAT MORE THAN 12 INCHES OF CONCRETE IS CAST IN THE MEMBER BELOW THE BAR IN ANY SINGLE POUR. HORIZONTAL WALL BARS ARE CONSIDERED TOP BARS. WHERE 3000 PSI CONCRETE IS USED, INCREASE ABOVE LENGTHS BY 16 PERCENT.

CONCRETE

1. 28-DAY CAST-IN-PLACE CONCRETE STRENGTHS:
   - TYPICAL: 4000 PSI
   - CURBS AND SIDEWALKS: 3000 PSI
   - CONDUIT ENCASEMENTS: 3000 PSI
   - PIPE ENCASEMENTS NOT INTEGRAL WITH FOUNDATIONS: 3000 PSI
2. REINFORCING STEEL:
   - TYPICAL: ASTM A615, GRADE 60
   - WELDED: ASTM A706, GRADE 60
3. FABRICATION AND PLACEMENT OF REINFORCING STEEL SHALL BE IN ACCORDANCE WITH CRSI MSP-1 "MANUAL OF STANDARD PRACTICE" AND ACI 301 "SPECIFICATIONS FOR STRUCTURAL, CONCRETE FOR BUILDING".
4. CONSTRUCTION JOINTS INDICATED ARE SUGGESTED LOCATIONS. CONTRACTOR MAY REVISE LOCATION OF JOINTS, SUBJECT TO SPECIFIED REQUIREMENTS. ADDITIONAL CONSTRUCTION JOINT LOCATIONS, INCLUDING ADDITIONAL REQUIRED FOR CONSTRUCTION, SHALL BE SUBMITTED FOR REVIEW BY ENGINEER.
5. ROUGHEN AND CLEAN CONSTRUCTION JOINTS IN WALLS AND SLABS AS SPECIFIED PRIOR TO PLACING ADJACENT CONCRETE.
6. THE CONTRACTOR SHALL COORDINATE PLACEMENT OF OPENINGS, CURBS, DOWELS, SLEEVES, CONDUITS, BOLTS AND INSERTS PRIOR TO PLACEMENT OF CONCRETE.
7. NO ALUMINUM CONDUIT OR PRODUCTS CONTAINING ALUMINUM OR ANY OTHER MATERIAL INJURIOUS TO THE CONCRETE SHALL BE EMBEDDED IN THE CONCRETE.
8. CONDUIT SHALL NOT BE PLACED PARALLEL WITH BEAM OR COLUMN REINFORCEMENT UNLESS SPECIFICALLY INDICATED IN DRAWINGS.

STEEL DECK

1. FOR DECK SIZE, GAGE, AND FASTENING REQUIREMENTS, SEE FRAMING PLANS.
2. WELDING SHALL BE IN ACCORDANCE WITH AWS D1.3 "STRUCTURAL WELDING CODE – SHEET STEEL".
3. DECKING SHALL HAVE A MINIMUM 1 1/2 INCHES BEARING ON ALL SUPPORTS.
4. DECKING SHALL BE CONTINUOUS OVER THREE SPANS MINIMUM, EXCEPT WHERE SHOWN OTHERWISE.

STEEL DECK

1. FOR DECK SIZE, GAGE, AND FASTENING REQUIREMENTS, SEE FRAMING PLANS.
2. WELDING SHALL BE IN ACCORDANCE WITH AWS D1.3 "STRUCTURAL WELDING CODE – SHEET STEEL".
3. DECKING SHALL HAVE A MINIMUM 1 1/2 INCHES BEARING ON ALL SUPPORTS.
4. DECKING SHALL BE CONTINUOUS OVER THREE SPANS MINIMUM, EXCEPT WHERE SHOWN OTHERWISE.

STRUCTURAL STEEL AND METAL FABRICATIONS

1. STRUCTURAL STEEL SHALL CONFORM TO THE FOLLOWING:
   - W-SHAPES A992
   - MISCELLANEOUS SHAPES INCLUDING ANGLES, CHANNELS, PLATES, ETC. A36
   - SQUARE OR RECTANGULAR STEEL TUBING A500, GRADE B
   - STEEL PIPE A53, GRADE B
2. STRUCTURAL STEEL SHALL BE FABRICATED AND ERECTED IN CONFORMANCE WITH THE AISC MANUAL OF CURRENT OSHA STANDARDS.
3. BOLTS SHALL BE HIGH STRENGTH BOLTS CONFORMING TO THE FOLLOWING EXCEPT WHERE SPECIFICALLY INDICATED OTHERWISE:
   - UNLESS SHOWN OTHERWISE A325-N
   - SLIP CRITICAL A325-SC
   - ANCHOR BOLTS (AB)
     - STAINLESS STEEL F593, AISI TYPE 316, CONDITION CW
     - STEEL F1554, GR 36
     - GALVANIZED STEEL F1554, GR 36 / A153
   - MACHINE BOLTS (MB) A307
4. ITEMS TO BE EMBEDDED IN CONCRETE SHALL BE CLEAN AND FREE OF OIL,
5. DIRT AND PAINT.

   NO HOLES OTHER THAN THOSE SPECIFICALLY DETAILED SHALL BE ALLOWED THROUGH STRUCTURAL
   STRUCTURAL STEEL IS PERMITTED WITHOUT THE APPROVAL OF THE ENGINEER.
   STEEL CONSTRUCTION, CURRENT EDITION, AND STEEL MEMBERS.
   NO CUTTING OR BURNING OF

GENERAL

1. PRE ENGINEERED METAL BUILDING MANUFACTURER SHALL DESIGN THE CANOPY AT SCALES AND PROVIDE SUPPORT FRAMING FOR ALL LOADS FROM ANY EQUIPMENT SUPPORTED BY THE ROOF. COORDINATE EQUIPMENT LOADS WITH EQUIPMENT MANUFACTURER AND OTHER DISCIPLINE DRAWINGS.

RECORD DRAWINGS

Revisions Drawn By D WELLS Date 7/16/12

THESE RECORD DRAWINGS HAVE BEEN PREPARED, IN PART, ON THE BASIS OF INFORMATION COMPILED BY OTHERS. THEY ARE NOT INTENDED TO REPRESENT IN DETAIL THE EXACT LOCATION, TYPE OF COMPONENT NOR MANNER OF CONSTRUCTION. THE ENGINEER WILL NOT BE RESPONSIBLE FOR ANY ERRORS OR OMISSIONS WHICH HAVE BEEN INCORPORATED INTO THE RECORD DRAWINGS.

MONRAD R THUE — LICENSE No. 32071 — STATE OF FLORIDA — PROFESSIONAL ENGINEER — 7/16/12

NO.	DATE	DSGN	DR	CHK	APVD	BY	APVD
		M THUE	K RINER	M CHRZANOWSKI			M THUE

REVISION

©CH2M HILL 2010. ALL RIGHTS RESERVED.

CH2MHILL
3011 SW WILLISTON RD
GAINESVILLE, FLORIDA 32608
EB0000072 AAC001992
Monrad R Thue PE 32071

SOLID WASTE SYSTEM
UPGRADE DESIGN
PASCO COUNTY
PASCO COUNTY, FLORIDA

GENERAL
STRUCTURAL LEGEND AND GENERAL NOTES

REUSE OF DOCUMENTS: THIS DOCUMENT, AND THE IDEAS AND DESIGNS INCORPORATED HEREIN, AS AN INSTRUMENT OF PROFESSIONAL SERVICE, IS THE PROPERTY OF CH2M HILL AND IS NOT TO BE USED, IN WHOLE OR IN PART, FOR ANY OTHER PROJECT WITHOUT THE WRITTEN AUTHORIZATION OF CH2MHILL

RECORD DRAWINGS FOR PERMIT

VERIFY SCALE
BAR IS ONE INCH ON ORIGINAL DRAWING. 0 1"

DATE	AUGUST 2012
PROJ	378217
DWG	00-G-005
SHEET	

GENERAL ARCHITECTURAL NOTES

1. UNLESS OTHERWISE INDICATED, PLAN DIMENSIONS ARE TO COLUMN GRID ON CENTERLINES, NOMINAL SURFACE OF MASONRY, FACE OF FINISH AND FACE OF CONCRETE WALLS.
2. "FLOOR LINE" REFERS TO TOP OF CONCRETE SLABS. FINISH FLOORING IS INSTALLED ABOVE THE FLOOR LINE. FOR DEPRESSED FLOORS AND CURBS, SEE STRUCTURAL DRAWINGS.
3. REPETITIVE FEATURES ARE NOT DRAWN IN THEIR ENTIRETY AND SHALL BE COMPLETELY PROVIDED AS IF DRAWN IN FULL.
4. WHERE DOOR IS LOCATED NEAR CORNER OF ROOM AND IS NOT LOCATED BY DIMENSION ON PLAN OR DETAILS, DIMENSION SHALL BE 3-INCHES FROM FACE OF STUD (WALL) TO FACE OF ROUGH OPENING. DIMENSION SHALL BE 6" FROM FACE OF WALL TO EDGE OF ROUGH OPENING AT CONCRETE WALLS, 8" AT CMU WALLS.
5. AT SOUND INSULATED WALLS, FULL HEIGHT PARTITIONS SHALL BE SEALED BOTH SIDES WITH ACOUSTIC SEALANT; TOP, BOTTOM, INTERSECTION, DOOR FRAMES, GLAZED OPENING FRAMES, AND OTHER PENETRATIONS.
6. LINE OF EXISTING GRADES, AS SHOWN ON THE BUILDING ELEVATIONS AND SECTIONS ARE APPROXIMATE. THEY ARE AT THE BUILDING FACE, OR ON THE SECTION END EXCEPT AS NOTED.
7. VERIFY ALL ROUGH-IN DIMENSIONS FOR EQUIPMENT PROVIDED IN THIS CONTRACT, OR BY OTHERS.
8. REFER TO ARCHITECTURAL, STRUCTURAL, MECHANICAL, ELECTRICAL AND OTHER CATEGORIES OR DRAWINGS FOR ADDITIONAL NOTES.
9. VERIFY SIZE AND LOCATION OF, AND PROVIDE: REQUIRED OPENINGS THROUGH FLOORS AND WALLS, ACCESS DOORS, FURRING, CURBS, ANCHORS AND INSERTS .PROVIDE ALL BASES AND BLOCKING REQUIRED FOR ACCESSORIES, MECHANICAL, ELECTRICAL AND OTHER EQUIPMENT.
10. FOR SIGN LOCATIONS SEE LIFE SAFETY PLANS ON ARCHITECTURAL DRAWINGS.
11. FOR GUARD POSTS LOCATIONS, SEE STRUCTURAL\CIVIL DRAWINGS.

FLORIDA ACCESSIBILITY CODE FOR BUILDING CONSTRUCTION (ADA)

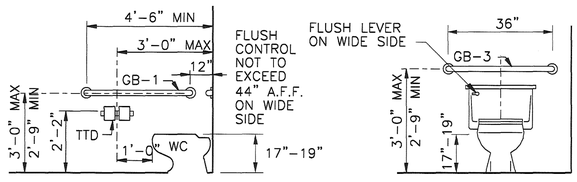

WATER CLOSETS 11-4.23.4

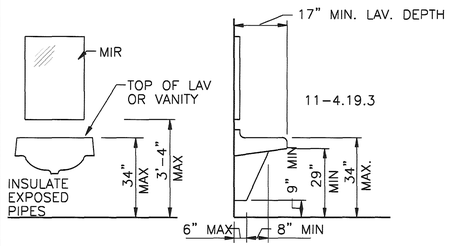

LAVATORIES & MIRRORS 11-4.19

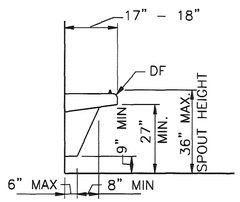

DRINKING FOUNTAINS 11-4.1.3 (10)

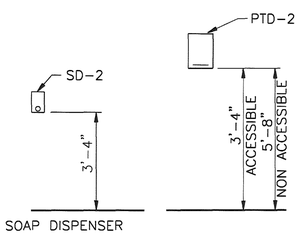

DISPENSERS 11-4.23.7

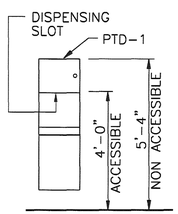

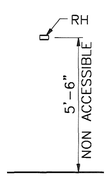

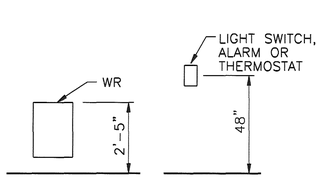

ALARMS 11-4.28

FOR INFORMATION ABOUT ADA SIGN REQUIRED FOR TOILET ROOMS, SEE SPECIFICATION SECTION 10 14 00.

ARCH/STRUCT MATERIAL SYMBOLS

SYMBOL	LEGEND
	GRATING, SPAN DIRECTION INDICATED
	CHECKERED PLATE
	GROUT
	GRANULAR FILL
	EARTH OR FINISH GRADE
	CONCRETE
	CMU WALL (PLAN)
	CMU WALL (SECTION)
	MASONRY WALL
	METAL STUD WALL (PLAN)
	WOOD STUD WALL (PLAN)
	RIGID INSULATION
	BATT INSULATION
	STEEL
	ALUMINUM
	PLYWOOD
	GYPSUM WALLBOARD
	ACOUSTICAL TILE
	WOOD, ROUGH CONTINUOUS
	WOOD, ROUGH NON-CONTINUOUS
	WOOD, FINISHED

ARCHITECTURAL/STRUCTURAL LEGEND

SYMBOL	LEGEND
A	GRID / COLUMN INDICATOR
ROOM NAME XX101 OR ROOM NAME 101	ROOM IDENTIFIER
"XX" = FACILITY INDICATOR (IF SHOWN); XX101A: DOOR LETTER, ROOM NUMBER	DOOR IDENTIFIER
XXW-1 OR W-1	WINDOW IDENTIFIER
XXR-1 OR R-1	RELIGHT IDENTIFIER
XXL-1 OR L-1	LOUVER IDENTIFIER
A	WALL TYPE INDICATOR
S-1	SIGNAGE IDENTIFIER
QUANTITY AND DIRECTION OF POINTERS AS REQUIRED; A, B, C, D, E; 1 XX-A-301	INTERIOR ELEVATION INDICATOR
⊗ 110.50	SPOT ELEVATION INDICATOR (IN FEET)
XXXX EL XX.XX	ELEVATION DATUM (IN FEET)
	DIRECTION OF SLOPE DOWN
HINGE SIDE	HATCH SWING INDICATOR

SYMBOL	LEGEND
ACTIVE XX101A INACTIVE	INDICATES PAIR OF DOORS (DOOR # ON ACTIVE)
F.EXT-X (IN CABINET); F.EXT-X (ON BRACKET)	FIRE EXTINGUISHER "X" = NUMBER IN SPECIFICATIONS
CJ	CONTROL JOINT
X" EJ	EXPANSION JOINT X" = DIMENSION
POST	RAILINGS
P-1	PRECAST PANEL IDENTIFIER
S-X	SLAB INDICATOR
X	COLUMN INDICATOR
W-X	WALL INDICATOR
B-X	BEAM INDICATOR

ACCESSIBLE MOUNTING HEIGHTS

NOTE:

1– INSTALLATION OF ACCESSIBLE TOILET AND BATH ACCESSORIES AND OTHER FIXTURES AND ITEMS SHALL MEET THE REQUIREMENTS OF THE AMERICANS WITH DISABILITIES ACT (ADA) AND WHEN APPLICABLE, FLORIDA BUILDING CODE. CHAPTER 11

2– GRAB BARS AND SHOWER SEATS ARE TO BE CONSTRUCTED AND INSTALLED TO MEET THE FOLLOWING STRUCTURAL STRENGTHS:

250 LB. BENDING MOMENT
250 LB. SHEAR STRESS
SHEAR FORCE INDUCED ON FASTENER OR MOUNTING DEVICE FROM APPLICATION OF 250 LB. FORCE SHALL BE LESS THAN ALLOWABLE LATERAL LOAD OF FASTENER OR SUPPORT STRUCTURE.

TENSILE FORCE INDUCED BY DIRECT TENSION FORCE OF 250 LB. PLUS MAXIMUM MOMENT FROM THE APPLICATION OF 250 LB SHALL BE LESS THAN THE ALLOWABLE WITHDRAWAL LOAD BETWEEN FASTENER AND SUPPORTING STRUCTURE.

GRAB BARS SHALL NOT ROTATE WITHIN THEIR FITTINGS.

3– DOOR OPENING FORCE: EXTERIOR - 8.5 LB, INTERIOR HINGED -

4– 5 LB, SLIDING OR FOLDING - 5 LB

APPLICABLE CODE LIST

2007 Florida Building Code
2007 Florida Mechanical OCde
2007 Florida Plumbing Code
National Electrical Code, NFPA 70
2007 Florida Fire Prevention Code

RECORD DRAWINGS

Revisions Drawn By D WELLS Date 7/16/12

THESE RECORD DRAWINGS HAVE BEEN PREPARED, IN PART, ON THE BASIS OF INFORMATION COMPILED BY OTHERS. THEY ARE NOT INTENDED TO REPRESENT IN DETAIL THE EXACT LOCATION, TYPE OF COMPONENT NOR MANNER OF CONSTRUCTION. THE ~~ENGINEER~~ ARCHITECT WILL NOT BE RESPONSIBLE FOR ANY ERRORS OR OMISSIONS WHICH HAVE BEEN INCORPORATED INTO THE RECORD DRAWINGS.

STATE OF FLORIDA REGISTERED ARCHITECT Beth Trautwein AR 91388

NO.	DATE	DSGN
DR	A COULLIAS	
CHK	T DODGE	
APVD	B TRAUTWEIN	
BY	APVD	

REVISION

©CH2M HILL 2010. ALL RIGHTS RESERVED.
THIS DOCUMENT, AND THE IDEAS AND DESIGNS INCORPORATED HEREIN, AS AN INSTRUMENT OF PROFESSIONAL SERVICE, IS THE PROPERTY OF CH2M HILL AND IS NOT TO BE USED, IN WHOLE OR IN PART, FOR ANY OTHER PROJECT WITHOUT THE WRITTEN AUTHORIZATION OF CH2MHILL.
REUSE OF DOCUMENTS

3011 SW WILLISTON RD
GAINESVILLE, FL 32608
EB0000072 AAC001992
Beth Trautwein AR 91388

SOLID WASTE SYSTEM
UPGRADE DESIGN
PASCO COUNTY
PASCO COUNTY, FLORIDA

CH2MHILL

GENERAL
ARCHITECTURAL LEGEND AND GENERAL NOTES

VERIFY SCALE
BAR IS ONE INCH ON ORIGINAL DRAWING.
0 1"

DATE	AUGUST 2012
PROJ	378217
DWG	00-G-006
SHEET	

RECORD DRAWINGS FOR PERMIT

1 2 3 4 5 6

HEATING, VENTILATING, AND AIR CONDITIONING PIPE AND FITTING SYMBOLS

DOUBLE LINE | SINGLE LINE

- EXISTING PIPE (SCREENED)
- NEW PIPE
- EXISTING PIPE TO BE ABANDONED
- EXISTING PIPE TO BE REMOVED
- WELDED JOINT
- GROOVED END JOINT
- FLANGED JOINT
- FLEXIBLE COUPLING
- GROOVED END ADAPTER FLANGE
- STEEL BELLOWS EXPANSION JOINT
- ELBOW UP
- ELBOW DOWN
- TEE UP
- TEE DOWN
- LATERAL UP
- LATERAL DOWN
- CONCENTRIC REDUCER
- ECCENTRIC REDUCER
- UNION
- ANCHOR
- PIPE ALIGNMENT GUIDE
- FLEXIBLE (ELASTOMER) PIPE CONNECTION

NOTES:

1. ONLY FLANGED FITTINGS ARE SHOWN FOR DOUBLE LINE PIPING. FITTINGS WITH OTHER END PATTERNS ARE SIMILAR.
2. EXISTING PIPING AND EQUIPMENT IS SHOWN LIGHT LINED AND/OR SCREENED AND IS NOTED AS EXISTING. NEW PIPING AND EQUIPMENT IS SHOWN HEAVY-LINED.

HVAC EQUIPMENT IDENTIFICATION

ACU	AIR CONDITIONING UNIT
ADJ	ADJUSTABLE
AHU	AIR HANDLING UNIT
BD	BALANCING DAMPER
BDD	BACKDRAFT DAMPER (GRAVITY)
BOD	BOTTOM OF DUCT
CD	CEILING DIFFUSER
CU	CONDENSING UNIT
EA	EXHAUST AIR
EF	EXHAUST FAN
EG	EXHAUST GRILLE
ER	EXHAUST REGISTER
FC	FLEXIBLE CONNECTION, FAIL CLOSE
FD	FIRE DAMPER
HCP	HVAC CONTROL PANEL
MD	MOTORIZED DAMPER
OSA	OUTSIDE AIR
RA	REUTRN AIR
RG	RETURN GRILLE
RL	REFRIGERANT LIQUID PIPE
RS	REFRIGERANT SUCTION PIPE
SA	SOUND ATTENUATOR, SUPPLY AIR
SF	SUPPLY FAN
SG	SUPPLY GRILLE
SP	STATIC PRESSURE
SR	SUPPLY RESISTER
TG	TRANSFER GRILLE
UH	UNIT HEATER

EQUIPMENT NOMENCLATURE

MANUAL VALVES AND CHECK VALVES IDENTIFICATION

75 - V 400
- VALVE TYPE, SEE SPECIFICATIONS
- VALVE DESIGNATION
- SIZE OF VALVE

AIR OUTLET AND INLET IDENTIFICATION

8x8 — DIMENSIONS IN INCHES
EG1 — SPECIFICATION DESCRIPTION
(250) — AIRFLOW IN CFM

HVAC EQUIPMENT TAG

85-UH-1
- SEQUENTIAL UNIT NUMBER
- HVAC EQUIPMENT IDENTIFICATION
- BUILDING IDENTIFICATION NUMBER

HVAC GENERAL NOTES

1. THIS IS A STANDARD LEGEND SHEET. COME SYMBOLS OR ABBREVIATIONS ON THIS SHEET MAY NOT APPEAR ON THE PLANS.
2. FOR ADDITIONAL ABBREVIATIONS OF OTHER DIVISIONS. SEE OTHER LEGENDS FOR MECHANICAL, AND STRUCTURAL/ ARCHITECTURAL.

HEATING, VENTILATING, AND AIR CONDITIONING SYMBOLS

SUPPLY GRILLE OR REGISTER (SG, SR)

EXHAUST, RETURN, OR TRANSFER GRILLE OR REGISTER (EG, ER, RG, RR, TG, TR)

4-WAY THROW 3-WAY THROW

2-WAY THROW 1-WAY THROW

CEILING DIFFUSERS (CD)

CEILING EXHAUST, RETURN AND TRANSFER GRILLES AND REGISTERS (EG, ER, RG, RR, TG, TR)

- 12x10 8x8 — ECCENTRIC TRANSITION
- 12x10 6x6 — CONCENTRIC TRANSITION
- FLEX DUCT AND SPIN-IN CONNECTION WITH INTEGRAL BALANCING DAMPER
- X — INDICATES DUCT MOUNTED CONTROL DEVICE "X" SEE HVAC CONTROL SYMBOLS
- (200) — VIBRATION ISOLATOR
- AD — CEILING ACCESS DOOR
- UC — PROVIDE DOOR UNDERCUT
- DOOR GRILLE
- FLEXIBLE CONNECTION (FC)
- FLEXIBLE DUCTWORK (SINGLE LINE)
- FLEXIBLE DUCTWORK (DOUBLE LINE)
- F — FIRE DAMPER
- FS — FIRE/SMOKE DAMPER
- BALANCING DAMPER
- M1 — MOTORIZED DAMPER
- BDD — BACKDRAFT DAMPER

- MITERED ELBOW WITH TURNING VANES
- RADIUS ELBOW
- 24x16 — 1. RECTANGULAR DUCT 2. DIMENSIONS IN INCHES 3. FIRST DIMENSION VISIBLE SIDE
- 24Ø — 1. ROUND DUCT 2. DIMENSIONS IN INCHES
- 24x16 — 1. EXISTING DUCT/EQUIPMENT TO REMAIN
- 24x16 — 1. DEMOLITION - EXISTING DUCT/ EQUIPMENT TO BE REMOVED
- ID — DUCT INSPECTION DOOR (HORIZONTAL OR VERTICAL)
- R — INCLINED RISE (R) OR DROP (D) ARROW IN DIRECTION OF FLOW
- 45 DEG BRANCH CONNECTION WITH BALANCING DAMPER
- SUPPLY OR INTAKE DUCT UP
- SUPPLY OR INTAKE DUCT DOWN
- RETURN OR EXHAUST DUCT UP
- RETURN OR EXHAUST DUCT DOWN
- EXHAUST DUCT UP
- EXHAUST DUCT DOWN
- AIR OUT OF OPENING
- AIR INTO OPENING
- MCC — DIVISION 16 MOTOR CONTROL CENTER
- MS — MOTOR STARTER
- M — ELECTRIC MOTOR
- FZ — LOW-LIMIT FREEZE THERMOSTAT
- VFD AFD — VARIABLE/ADJUSTABLE FREQUENCY DRIVE
- HVAC CONTROL PANEL (HCP)
- S — SWITCH
- T T — TEMPERATURE SENSOR OR THERMOSTAT
- H H — HUMIDITY SENSOR OR HUMIDISTAT
- CS — CURRENT SENSOR
- DP — DIFFERENTIAL PRESSURE SENSOR OR SWITCH
- SP — STATIC PRESSURE SENSOR
- I — DUCT SMOKE DETECTOR
- M — MOTORIZED DAMPER
- R — RELAY
- + - ± — POSITIVE, NEGATIVE, NEUTRAL ROOM PRESSURIZATION

RECORD DRAWINGS

Revisions Drawn By D WELLS Date JULY 2012

THESE RECORD DRAWINGS HAVE BEEN PREPARED, IN PART, ON THE BASIS OF INFORMATION COMPILED BY OTHERS. THEY ARE NOT INTENDED TO REPRESENT IN DETAIL THE EXACT LOCATION, TYPE OF COMPONENT NOR MANNER OF CONSTRUCTION. THE ENGINEER WILL NOT BE RESPONSIBLE FOR ANY ERRORS OR OMISSIONS WHICH HAVE BEEN INCORPORATED INTO THE RECORD DRAWINGS. CASSANDRA JO ANDERSON, PE 68461 IS THE ENGINEER OF RECORD FOR THE DESIGN AND CONSTRUCTION OF THIS PROJECT.

PLUMBING SYMBOLS

- YCO-X — Y = F - FLOOR CLEANOUT, W - WALL CLEANOUT; X = NO. IN SPECIFICATION
- HD-XY — HUB DRAIN; X - NO. IN SPECIFICATION; Y - T WITH TRAP; Y - P WITH PRIMED TRAP
- FD-XY — FLOOR DRAIN; X - NO. IN SPECIFICATION; Y - T WITH TRAP; Y -P WITH PRIMED TRAP

PLUMBING EQUIPMENT IDENTIFICATION

IDENTIFICATION	EQUIPMENT NAME
CP	CONTROL PANEL
SP	SUMP PUMP
WH	WATER HEATER

EXAMPLE CALLOUT:

25 - SP- 1
- FACILITY NUMBER OR UNIT PROCESS (IF USED ON PROJECT)
- FIXTURE LEGEND
- NO. IN SPECIFICATIONS

VALVE SYMBOLS

SINGLE LINE | DOUBLE LINE

- GATE
- BALL (double line: OR)
- SWING CHECK (double line: OR)
- HOSE VALVE (HV- X) OR (V-X) X = NO. IN SPECS
- BACKFLOW PREVENTER

PLUMBING FIXTURE IDENTIFICATION

IDENTIFICATION	EQUIPMENT NAME
CO-1	EXTERIOR CLEANOUT
FCO	FLOOR CLEANOUT
FD	FLOOR DRAIN
EWC	ELECTRIC WATER COOLER
LAV	LAVATORY SINK
S	SINK
WHA	WATER HAMMER ARRESTER
WC	WATER CLOSET

EXAMPLE CALLOUT:

LAV-1
- FIXTURE LEGEND
- NO. IN SPECIFICATIONS

ANGEL VALENTE PEREZ ★ LICENSE No. 70128 STATE OF FLORIDA ★ PROFESSIONAL ENGINEER

NO.	DATE	REVISION	BY	APVD

DSGN C ANDERSON | DR Y FITZGERALD | CHK G SMARR | APVD C ANDERSON

3011 SW WILLISTON RD
GAINESVILLE, FLORIDA 32608
EB0000072 AAC001992
Cassandra Jo Anderson PE 68461

SOLID WASTE SYSTEM
UPGRADE DESIGN
PASCO COUNTY
PASCO COUNTY, FLORIDA

CH2MHILL

GENERAL

MECHANICAL LEGEND

VERIFY SCALE
BAR IS ONE INCH ON ORIGINAL DRAWING.
0 1"

DATE	AUGUST 2012
PROJ	378217
DWG	00-G-007
SHEET	

©CH2M HILL 2010. ALL RIGHTS RESERVED.
REUSE OF DOCUMENTS: THIS DOCUMENT, AND THE IDEAS AND DESIGNS INCORPORATED HEREIN, AS AN INSTRUMENT OF PROFESSIONAL SERVICE, IS THE PROPERTY OF CH2M HILL AND IS NOT TO BE USED, IN WHOLE OR IN PART, FOR ANY OTHER PROJECT WITHOUT THE WRITTEN AUTHORIZATION OF CH2MHILL.

RECORD DRAWINGS FOR PERMIT

ONE LINE DIAGRAMS-1

SYMBOL	DESCRIPTION
	DRAWOUT AIR CIRCUIT BREAKER, LOW VOLTAGE
400	CIRCUIT BREAKER, THERMAL MAGNETIC TRIP SHOWN, 3 POLE, UNO
AS/AF OR AT/AF	CIRCUIT BREAKER, STATIC TRIP UNIT, SENSOR AMP TRIP AND FRAME RATINGS SHOWN, 3 POLE, UNO
100/M	CIRCUIT BREAKER, MAGNETIC TRIP ONLY, FRAME SIZE SHOWN, 3 POLE, UNO
400 400	CIRCUIT BREAKER WITH CURRENT LIMITING FUSES, TRIP AND FUSE RATING INDICATED, 3 POLE, UNO
400 225	FUSED SWITCH, SWITCH AND FUSE CURRENT RATING INDICATED, 3 POLE, UNO
100	SWITCH - CURRENT RATING INDICATED, 3 POLE, UNO
60 (3)	FUSE, RATING AND QUANTITY INDICATED
1	MAGNETIC STARTER WITH OVERLOAD, NEMA SIZE INDICATED
AFD RVSS, AFD, or DC	ELECTRONIC STARTER/SPEED CONTROL SS = AC SOLID STATE SOFT STARTER AFD = AC ADJUSTABLE FREQUENCY DRIVE DC = DC ADJUSTABLE SPEED DRIVE
	CABLE OR BUS CONNECTION POINT
K	KEY INTERLOCK
	SURGE ARRESTER (GAP TYPE)
10	CAPACITOR - KVAR INDICATED, 3 PHASE
3	MOTOR, SQUIRREL CAGE INDUCTION - HORSEPOWER INDICATED
VS V 0-600V	ANALOG METER WITH SWITCH - SCALE RANGE SHOWN V = VOLTAGE KW = KILOWATTS A = AMPERAGE KVAR = KILOVARS PF = POWER FACTOR
DPM	DIGITAL POWER METER (MULTIFUNCTION)
	GROUND
120/240V 15 KVA 1 PH	TRANSFORMER, SECONDARY VOLTAGES, PHASE AND RATING INDICATED AS APPLICABLE
(3)	POTENTIAL TRANSFORMER, QUANTITY INDICATED (3)
100:5 (3)	CURRENT TRANSFORMER, RATIO(100:5) AND QUANTITY INDICATED (3)
	CONNECTION POINT TO EQUIPMENT SPECIFIED IN OTHER DIVISIONS. RACEWAY, CONDUCTOR AND CONNECTION IN THIS DIVISION

ONE LINE DIAGRAMS-2

SYMBOL	DESCRIPTION
	DRAWOUT AIR CIRCUIT BREAKER, MEDIUM VOLTAGE
	NON DRAWOUT FUSED SWITCH, MEDIUM VOLTAGE
	DRAWOUT FUSED SWITCH AND CONTACTOR, MEDIUM VOLTAGE
	DRAWOUT FUSED SWITCH AND VACUUM CONTACTOR, MEDIUM VOLTAGE
	DRAWOUT VACUUM BREAKER, MEDIUM VOLTAGE
	MEDIUM VOLTAGE CABLE STRESS TYPE TERMINATION OPEN TERMINATOR OR ELBOW
	SWITCH - LOAD BREAK, GROUP OPERATED
	SWITCH W/ARCING HORNS
	FUSE - SOLID MATERIAL, DISCONNECTING
	SWITCH - HOOK STICK OPERATED, SINGLE POLE
	FUSE - EXPULSION, HOOK STICK OPERATED, SINGLE POLE
	GROUND SWITCH, GANG OPERATED
	TERMINAL BLOCK LUG
	DELTA CONNECTION
	WYE GROUNDED CONNECTION, SOLID GROUND
R or Z	WYE NEUTRAL GROUND RESISTOR OR IMPEDANCE CONNECTION
RVAT RVAT or RVRT	MAGNETIC REDUCED VOLTAGE STARTER RVAT = REDUCED VOLTAGE AUTO TRANSFORMER TYPE RVRT = REDUCED VOLTAGE REACTOR TYPE
86	RELAY OR DEVICE, FUNCTION NUMBER AS INDICATED
	CURRENT TRANSFORMER, ZERO SEQUENCE
	BUSHING CURRENT TRANSFORMER
GFR 25A 0.1	PICK-UP SETTING TIME CURRENT CHARACTERISTIC GROUND FAULT RELAY WITH CURRENT TRANSFORMER.
MO	MOTOR OPERATOR, BREAKER OR SWITCH
EMU	ENERGY MONITORING UNIT
MPR	MOTOR PROTECTION RELAY

NOTES:

1. THESE ARE STANDARD LEGEND SHEETS. SOME SYMBOLS AND ABBREVIATIONS MAY APPEAR ON THE LEGEND AND NOT ON THE DRAWINGS.
2. FOR ADDITIONAL ABBREVIATIONS OF OTHER DIVISIONS (HVAC, MECHANICAL, AND STRUCTURAL/ARCHITECTURAL) SEE OTHER LEGENDS.

RECORD DRAWINGS

Revisions Drawn By D WELLS Date 7/16/12

THESE RECORD DRAWINGS HAVE BEEN PREPARED, IN PART, ON THE BASIS OF INFORMATION COMPILED BY OTHERS. THEY ARE NOT INTENDED TO REPRESENT IN DETAIL THE EXACT LOCATION, TYPE OF COMPONENT NOR MANNER OF CONSTRUCTION. THE ENGINEER WILL NOT BE RESPONSIBLE FOR ANY ERRORS OR OMISSIONS WHICH HAVE BEEN INCORPORATED INTO THE RECORD DRAWINGS.

POWER CIRCUIT SCHEDULE

EQUIPMENT GROUNDS NEC 250 Table 122	100% GROUNDS NEC 250-122(A)		SERVICE GROUNDS NEC 250 Table 66	
		2 Wire + Ground		
[20E2]	[20M2]	3/4"C-2#12,#12G	NA	NA
[30E2]	[30M2]	3/4"C-2#10,#10G	NA	NA
[40E2]	[40M2]	3/4"C-2#8,#8G	[40S2]	3/4"C-2#8,#8G
[50E2]	[50M2]	3/4"C-2#8,#6G	[50S2]	3/4"C-2#6,#6G
[60E2]	[60M2]	1"C-2#6,#6G	[60S2]	3/4"C-2#6,#8G
[70E2]	[70M2]	1"C-2#4,#4G	[70S2]	3/4"C-2#4,#8G
[80E2]	[80M2]	1"C-2#4,#4G	[80S2]	3/4"C-2#4,#8G
[90E2]	[90M2]	1"C-2#3,#3G	[90S2]	1"C-2#3,#6G
[100E2]	[100M2]	1"C-2#3,#3G	[100S2]	1"C-2#3,#6G
[110E2]	[110M2]	1"C-2#2,#2G	[110S2]	1"C-2#2,#8G
[125E2]	[125M2]	1-1/4"C-2#1,#1G	[125S2]	1-1/4"C-2#1,#6G
[150E2]	[150M2]	1-1/4"C-2#1/0,#1/0G	[150S2]	1-1/4"C-2#1/0,#6G
[200E2]	[200M2]	1-1/2"C-2#3/0,#3/0G	[200S2]	1-1/4"C-2#3/0,#4G
[225E2]	[225M2]	2"C-2#4/0,#4/0G	[225S2]	1-1/2"-2#4/0,#2G
		3 Wire + Ground		
[20E3]	[20M3]	3/4"C-3#12,#12G	NA	NA
[30E3]	[30M3]	3/4"C-3#10,#10G	NA	NA
[40E3]	[40M3]	3/4"C-3#8,#8G	[40S3]	3/4"C-3#6,#8G
[50E3]	[50M3]	3/4"C-3#8,#8G	[50S3]	3/4"C-3#8,#8G
[60E3]	[60M3]	3/4"C-3#6,#6G	[60S3]	3/4"C-3#6,#8G
[70E3]	[70M3]	1"C-3#4,#4G	[70S3]	1"C-3#4,#8G
[80E3]	[80M3]	1"C-3#4,#4G	[80S3]	1"C-3#4,#8G
[90E3]	[90M3]	1-1/4"C-3#3,#3G	[90S3]	1"C-3#3,#6G
[100E3]	[100M3]	1-1/4"C-3#3,#3G	[100S3]	1"C-3#3,#6G
[110E3]	[110M3]	1-1/2"C-3#2,#2G	[110S3]	1"C-3#2,#8G
[125E3]	[125M3]	1-1/2"C-3#1,#1G	[125S3]	1-1/2"C-3#1,#6G
[150E3]	[150M3]	1-1/2"C-3#1/0,#1/0G	[150S3]	1-1/4"C-3#1/0,#6G
[200E3]	[200M3]	2"C-3#3/0,#3/0G	[200S3]	1-1/2"C-3#3/0,#4G
[225E3]	[225M3]	2"C-3#4/0,#4/0G	[225S3]	2"C-3#4/0,#2G
[250E3]	[250M3]	2-1/2"C-3#300,#300G	[250S3]	2-1/2"C-3#300,#2G
[300E3]	[300M3]	3"C-3#350,#350G	[300S3]	2-1/2"C-3#350,#2G
[350E3]	[350M3]	3"C-3#500,#500G	[350S3]	3"C-3#500,#1/0G
[400E3]	[400M3]	3"C-3#600,#600G	[400S3]	3"C-3#600,#1/0G
[500E3]	[500M3]	(2)2-1/2"C-3#250,#250G	[500S3]	(2)2-1/2"C-3#250,#1/0G
[600E3]	[600M3]	(2)3"C-3#350,#350G	[600S3]	(2)3"C-3#350,#2/0G
[700E3]	[700M3]	(2)3"C-3#500,#600G	[700S3]	(2)3"C-3#500,#2/0G
[800E3]	[800M3]	(2)3"C-3#500,#600G	[800S3]	(2)3"C-3#500,#2/0G
[1000E3]	[1000M3]	(3)3"C-3#500,#600G	[1000S3]	(3)3"C-3#600,#3/0G
[1200E3]	[1200M3]	(3)3-1/2"C-3#600,#600G	[1200S3]	(3)3-1/2"C-3#600,#3/0G
[1600E3]	[1600M3]	(4)3-1/2"C-3#600,#600G	[1600S3]	(4)3-1/2"C-3#600,#3/0G
[2000E3]	[2000M3]	(5)3-1/2"C-3#600,#600G	[2000S3]	(5)3-1/2"C-3#600,#3/0G
[2500E3]	[2600M3]	(6)3-1/2"C-3#600,#600G	[2500S3]	(6)3-1/2"C-3#600,#3/0G
[3000E3]	[3000M3]	(6)3-1/2"C-3#600,#600G	[3000S3]	(6)3-1/2"C-3#600,#3/0G
[4000E3]	[4000M3]	(10)3-1/2"C-3#600,#600G	[4000S3]	(10)3-1/2"C-3#600,#3/0G
		4 Wire + Ground		MULTI-WIRE 20 AMP
[20E4]	[20M4]	3/4"C-4#12,#12G	[20E6]	3/4"C-6#12,1#12G
[30E4]	[30M4]	3/4"C-4#10,#10G	[20E6]	3/4"C-6#12,1#12G
[40E4]	[40M4]	3/4"C-4#8,#8G	[20E7]	3/4"C-7#12,1#12G
[50E4]	[50M4]	3/4"C-4#8,#8G	[20E8]	3/4"C-8#12,1#12G
[60E4]	[60M4]	1"C-4#6,#6G	[20E9]	3/4"C-9#12,1#12G
[70E4]	[70M4]	1-1/4"C-4#4,#4G	[20E10]	1"C-10#10,1#10G
[80E4]	[80M4]	1-1/4"C-4#4,#4G	[20E11]	1"C-11#10,1#10G
[90E4]	[90M4]	1-1/4"C-4#3,#3G	[20E12]	1"C-12#10,1#10G
[100E4]	[100M4]	1-1/4"C-4#3,#3G	[20E13]	1"C-13#10,1#10G
[110S4]	[110M3]	1-1/2"C-4#2,#2G	[20E14]	1"C-14#10,1#10G
[125E4]	[125M4]	1-1/2"C-4#1,#1G	[20E15]	1"C-15#10,1#10G
[150E4]	[150M4]	2"C-4#1/0,#1/0G	[20E16]	1-1/4"C-16#10,1#10G
[200E4]	[200M4]	2"C-4#3/0,#3/0G	[20E17]	1-1/4"C-17#10,1#10G
[225E4]	[225M4]	2-1/2"C-4#4/0,#4G	[20E18]	1-1/4"C-18#10,1#10G
[250E4]	[250M4]	3"C-4#300,#300G	[20E19]	1-1/4"C-19#10,1#10G
[300E4]	[300M4]	3"C-4#350,#350G	[20E20]	1-1/4"C-20#10,1#10G
[350E4]	[350M4]	3-1/2"C-4#500,#500G		
[400E4]	[400M4]	(2)3-1/2"C-4#500,#500G		
[500E4]	[500M4]	(2)3-1/2"C-4#250,#250G		
[600E4]	[600M4]	(2)3-1/2"C-4#250,#250G		
[700E4]	[700M4]	(2)3-1/2"C-4#500,#500G		
[800E4]	[800M4]	(2)3-1/2"C-4#500,#500G		
[1000E4]	[1000M4]	(3)3"C-4#350,#350G		
[1200E4]	[1200M4]	(3)4"C-4#600,#600G		
[1600E4]	[1600M4]	(4)4"C-4#600,#600G		
[2000E4]	[2000M4]	(5)4"C-4#600,#600G		
[2500E4]	[2500M4]	(6)4"C-4#600,#600G		
[3000E4]	[3000M4]	(8)4"C-4#600,#600G		
[4000E4]	[4000M4]	(10)4"C-4#600,#600G		

THE MULTIWIRE CONFIGURATIONS SHOWN HERE SHALL NOT BE USED FOR RECEPTACLE CIRCUITS OR OTHER CORD-AND-PLUG-CONNECTED PORTABLE LOADS. NEC-240.4(B)

ANALOG CIRCUIT CALLOUTS		CONTROL CIRCUIT CALLOUTS	
[A1]	[3/4"C,1 TYPE 3]	[C1]	[3/4"C,MSC] (NOTE 1)
[A2]	[1"C,2 TYPE 3]	[C2]	[3/4"C,2#14,1#14G]
[A3]	[1"C,3 TYPE 3]	[C3]	[3/4"C,3#14,1#14G]
[A4]	[1"C,4 TYPE 3]	[C4]	[3/4"C,4#14,1#14G]
[A5]	[1 1/4"C,5 TYPE 3]	[C5]	[3/4"C,5#14,1#14G]
[A6]	[1 1/4"C,6 TYPE 3]	[C6]	[3/4"C,6#14,1#14G]
[A7]	[1 1/2"C,7 TYPE 3]	[C7]	[3/4"C,7#14,1#14G]
[A8]	[1 1/2"C,8 TYPE 3]	[C8]	[3/4"C,8#14,1#14G]
[A9]	[1 1/2"C,9 TYPE 3]	[C9]	[3/4"C,9#14,1#14G]
[A10]	[2"C,10 TYPE 3]	[C10]	[3/4"C,10#14,1#14G]
[A11]	[2"C,11 TYPE 3]	[C11]	[3/4"C,11#14,1#14G]
[A12]	[2"C,12 TYPE 3]	[C12]	[3/4"C,12#14,1#14G]
[A13]	[2"C,13 TYPE 3]	[C13]	[3/4"C,13#14,1#14G]
[A14]	[2"C,14 TYPE 3]	[C14]	[3/4"C,14#14,1#14G]
[A15]	[2 1/2"C,15 TYPE 3]	[C15]	[3/4"C,15#14,1#14G]
[A16]	[2 1/2"C,16 TYPE 3]	[C16]	[3/4"C,16#14,1#14G]
[A17]	[2 1/2"C,17 TYPE 3]	[C17]	[3/4"C,17#14,1#14G]
[A18]	[2 1/2"C,18 TYPE 3]	[C18]	[3/4"C,18#14,1#14G]
[A19]	[2 1/2"C,19 TYPE 3]	[C19]	[3/4"C,19#14,1#14G]
[A20]	[2 1/2"C,20 TYPE 3]	[C20]	[1"C,20#14,1#14G]
[AMC4]	[3/4"C, 4 pr. TYPE 5]	[C21]	[1"C,21#14,1#14G]
[AMC8]	[1 1/2"C, 8 pr. TYPE 5]	[C22]	[1"C,22#14,1#14G]
[AMC12]	[1 1/2"C, 12 pr. TYPE 5]	[C23]	[1"C,23#14,1#14G]
[AMC16]	[1 1/2"C, 16 pr. TYPE 5]	[C24]	[1"C,24#14,1#14G]
[AMC24]	[2"C, 24 pr. TYPE 5]	[C25]	[1"C,25#14,1#14G]
[AMC36]	[2"C, 36 pr. TYPE 5]		
[AMC50]	[2 1/2"C, 50 pr. TYPE 5]		

CONTROL CABLE CIRCUIT CALLOUTS		EMPTY CONDUIT	
[CC5]	[3/4"C,1-5C TYPE 1]	[CE-1]	[3/4"C,WITH PULL STRING]
[CC7]	[3/4"C,1-7C TYPE 1]	[CE-2]	[1"C,WITH PULL STRING]
[CC9]	[1"C,1-9C TYPE 1]	[CE-3]	[1 1/4"C,WITH PULL STRING]
[CC12]	[1"C,1-12C TYPE 1]	[CE-4]	[1 1/2"C,WITH PULL STRING]
[CC19]	[1 1/2 ", 1-19C TYPE 1]	[CE-5]	[2"C,WITH PULL STRING]
[CC25]	[1 1/2"C,1-25C TYPE 1]	[CE-6]	[3"C,WITH PULL STRING]
[CC37]	[2"C,1-37C TYPE 1]	[CE-7]	[4"C,WITH PULL STRING]
[CCC1]	[1-7C #12 TYP 1]	[CE-8]	[5"C,WITH PULL STRING]

[E1] = [3/4"C, 1-CAT 6 UTP]
[S1] = [3/4"C, 1-SERIAL CABLE]
[F/O] = [2"C, FIBER OPTIC CABLE] (CABLE PROVIDED BY PICS SUBCONTRACTOR)

NOTES

1. SIZE OF MSC MAY VARY. COORDINATE SIZE OF CONDUIT WITH EQUIPMENT DATSHEETS.

LIGHTING FIXTURE SCHEDULE

SYMBOL	MARK	VOLTS	LAMP			MOUNT	DESCRIPTION	MAKE/MODEL
	A	120	T-8 FLUO	17	3	GRID	2'x2' STATIC TROFFER WITH OPEN PARABOLIC REFLECTOR, T-HINGES, SPRING LOADED LATCHES, GASKETED ALUMINUM DOOR FRAME. WHITE POLYESTER POWDER ENAMEL FINISH. ENERGY EFFICIENT 430mA ELECTRONIC PROGRAMMED-START BALLAST, UL LISTED. PROVIDE WITH ALTO LOW-MERCURY LAMPS.	LITHONIA PARAMAX 2PMG G B 3 17 9 ND 120 ***
								METALUX
								SIMKAR
	B	120	T-8 FLUO	32	4	GRID	2x4' STATIC TROFFER WITH OPEN PARABOLIC REFLECTOR, T-HINGES, SPRING LOADED LATCHES, GASKETED ALUMINUM DOOR FRAME. WHITE POLYESTER POWDER ENAMEL FINISH. ENERGY EFFICIENT 430mA ELECTRONIC PROGRAMMED- START BALLAST. UL LISTED. PROVIDE WITH ALTO LOW-MERCURY LAMPS.	LITHONIA PARAMAX PMG G B 4 32 18 ND 120 ***
								METALUX
								SIMKAR
	C	120	T-8 FLUO	32	2	GRID	SAME AS MARK B FIXTURE, EXCEPT 2 LAMPS	LITHONIA PARAMAX PMG G B 2 32 18 ND 120 ***
								METALUX
								SIMKAR
	D	120	T-8 FLUO	32	2	GRID	2'X4' WET LOCATION TROFFER WITH CODE-GAUGE STEEL HOUSING, POLYESTER POWDER ENAMEL FINISH, LATCHED ALUMINUM DOOR FRAME, ACRYLIC LENS WITH INTERNAL PRISMS. UL LISTED FOR WET LOCATIONS. ENERGY EFFICIENT 430 mA ELECTRONIC PROGRAMMED-START BALLAST. PROVIDE WITH ALTO LOW-MERCURY LAMPS.	LITHONIA 2WRT G 2 32 A 12125 120 ***
	E	120	T-8 FLUO	32	3	SURF	1'X4' HEAVY DUTY INDUSTRIAL STRIP WITH HEAVY-GAUGE COLD ROLLED STEEL HOUSING, POLYESTER POWDER ENAMEL FINISH, DIE-EMBOSSED REFLECTOR FOR 10% UPLIGHT. ELECTRONIC, PROGRAMMED-START BALLAST. ALTO LOW MERCURY LAMPS. UL LISTED.	LITHONIA AF1/0 3 32 120 ***
	F	120	MH	250	1	PENDANT	UNDER-CANOPY FIXTURE WITH DROP PRISMATIC POLYCARBONATE LENS, DIE-CAST ALUMINUM HOUSING, POLYESTER POWDER FINISH, THRU-WIRE CONDULET TEE CAPABILITY , SWING-DOWN HINGES FOR LAMP AND BALLAST ACCESS, HIGH PWER FACTOR, CONSTANT WATTAGE AUTO TRANSFORMER BALLAST, QUARTZ RESTRIKE, UL-LISTED FOR WET LOCATIONS. CORROSION RESISTANT.	LITHONIA KACM 250 DPP 120 SCWA QRSTD LP1
								RUUD
								HOLOPHANE
	G	277	MH	100	1	PENDANT	CUT-OFF TYPE UNDER-CANOPY FIXTURE WITH PRISMATIC GLASS LENS, DIE-CAST ALUMINUM HOUSING, POLYESTER OR EPOXY PAINT, SWING-DOWN HINGES FOR LAMP AND BALLAST ACCESS AND CAPTIVE STAINLESS STEEL CLOSURE SCREWS. UL- LISTED FOR WET LOCATIONS. CORROSION RESISTANT.	RUUD CLO-12 SERIES: MCL0410 D
								LITHONIA
								HOLOPHANE
	H	120	COMP FLUO	42	1	WALL	MINIWALL-PAK FIXTURE WITH DIE CAST ALUMINUM HOUSING, ALUMINUM MIRELECTOR, CUTOFF POLYCARBONATE REFRACTOR. UL LISTEDED FOR WET LOCATIONS.	LITHONIA TWAC 42TRT M VOLT
	I	120	MH	250	1	POLE (30'-0" MOUNTING HEIGHT)	COBRA-HEAD ROADWAY LUMINAIRE WITH DIE-CAST LOW COPPER HOUSING, TRIGGER-LATCHED LOWER DOOR FOR EASY ACCESS TO ELECTRONICS AND FOR EASY RELAMPING. ELECTRONICS MOUNTED ON REMOVABLE DOOR. FLAT TEMPERED GLASS LENS WITH FULL CUT-OFF OPTICS AND R3 DISTRIBUTION. CONSTANT WATTAGE AUTOTRANSFORMER BALLAST. PROVIDE WITH 4 FOOT ARMS. UL LISTED.	LITHONIA CHLD 250M R3 FL 120 LPI
	J	120	HAL	8	2	SURF	EMERGENCY LIGHT WITH DIE-CAST STEEL HOUSING, ENAMEL PAINT FINISH, MAINTENANCE-FREE NICKEL-CADMIUM BATTERIES, AND INTEGRAL TIME DELAY. BATTERY CAPACITY FOR 1.5 HOURS CONTINUOUS OPERATION AT RATED OUTPUT. UL 924 LISTED.	LITHONIA TITAN ELT16 N H
	K	120	COMP FLUO	26 DTT	1	RECESSED	6" ROUND FLUORESCENT DOWNLIGHT WITH GALVANIZED STEEL FRAME AND JBOX, SEMI SPECULAR CLEAR ANODIZED ALUMINUM REFLECTOR, UL LISTED FOR WET LOCATION.	GOTHAM LGF SERIES
	X	120	LED	1	1	SURF	EMERGENCY EXIT SIGN WITH DIE-CAST ALUMINUM HOUSING, WHITE PAINT FINISH. LONG-LIFE, RED LEDS, MAINTENANCE-FREE NI-CAD BATTERY WITH SOLID STATE CHARGING SYSTEM, AND SELF-DIAGNOSTIC CAPABILITIES. UL LISTED.	LITHONIA SIGNATURE LE S W 1 R 120/277 EL N SD

NOTE 1 - PROVIDE ALL FIXTURES MARKED WITH BLACK DOT ON PLANS WITH FACTORY INSTALLED 90 MINUTE UL-924 BATTERY PACK AND CHARGER.
NOTE 2 - FOR ALL LUMINAIRES MARKED WITH TRIPLE ASTERISK (***), COORDINATE WITH LUMINAIRE MANUFACTURER TO ENSURE THAT LUMINAIRE IS PROVIDED WITH 430mA ENERGY EFFICIENT, PROGRAM START ELECTRONIC BALLASTS.

DAVID C. NICHOLSON LICENSE Number STATE OF FLORIDA PROFESSIONAL ENGINEER

NO.	DATE	DSGN	BY	APVD
REVISION		DR	CHK	APVD
		J LEWIS	A CLOUGH	M GOSLOW
				D NICHOLSON

©CH2M HILL 2010. ALL RIGHTS RESERVED.
THIS DOCUMENT, AND THE IDEAS AND DESIGNS INCORPORATED HEREIN, AS AN INSTRUMENT OF PROFESSIONAL SERVICE, IS THE PROPERTY OF CH2M HILL AND IS NOT TO BE USED, IN WHOLE OR IN PART, FOR ANY OTHER PROJECT WITHOUT THE WRITTEN AUTHORIZATION OF CH2M HILL.
REUSE OF DOCUMENTS:

3011 SW WILLISTON RD
GAINESVILLE, FLORIDA 32608
EB0000072 AAC001992
DAVID C NICHOLSON PE 60201

CH2MHILL

SOLID WASTE SYSTEM
UPGRADE DESIGN
PASCO COUNTY
PASCO COUNTY, FLORIDA

GENERAL
ELECTRICAL LEGEND
SHEET 1

VERIFY SCALE
BAR IS ONE INCH ON ORIGINAL DRAWING.
0 1"

DATE	AUGUST 2012
PROJ	378217
DWG	00-G-008
SHEET	

RECORD DRAWINGS FOR PERMIT

POWER SYSTEM PLAN-1

SYMBOL	DESCRIPTION
	CONNECTION POINT TO EQUIPMENT SPECIFIED. RACEWAY, CONDUCTOR,TERMINATION AND CONNECTION IN THIS DIVISION.
MCC-A	MAJOR ELECTRICAL COMPONENT OR DEVICE - NAME OR IDENTIFYING SYMBOL AS SHOWN.
	PANELBOARD - SURFACE MOUNTED
LPA	PANELBOARD LETTER LP - LIGHTING PANEL DP - DISTRIBUTION PANEL
	PANELBOARD - FLUSH MOUNTED
	TERMINAL JUNCTION BOX
M	MOTOR, SQUIRREL CAGE INDUCTION
G	GENERATOR, VOLTAGE AND SIZE AS INDICATED.
LPA-2	HOME RUN - DESTINATION SHOWN
or G	EXPOSED CONDUIT AND CONDUCTORS*
or G	CONCEALED CONDUIT AND CONDUCTORS*

NOTE:
ALL UNMARKED CONDUIT RUNS CONSIST OF TWO NO. 12, ONE NO. 12 GROUND CONDUCTORS IN 3/4" CONDUIT. RUNS MARKED WITH CROSSHATCHES INDICATE NUMBER OF NO. 12 CONDUCTORS. CROSSHATCH WITH SUBSCRIPT "G" INDICATES GREEN GROUND WIRE.

G	CROSSHATCHES WITH BAR INDICATE NO.10 CONDUCTOR. SIZE CONDUIT ACCORDING TO SPECIFICATIONS AND APPLICABLE CODE.
[A1]	CONDUCTOR AND RACEWAY CALLOUT - FOR CONDUIT AND CONDUCTORS, SEE LEGEND.
	CONDUIT DOWN
	CONDUIT UP
	CONDUIT, STUBBED AND CAPPED AS SHOWN
	CONDUIT TERMINATION AT CABLE TRAY
EX	EXISTING CONDUIT/ DUCK BANK
CT	CABLE TRAY - SEE SPECIFICATIONS
BD	BUS DUCT - SEE SPECIFICATIONS
CE	CONCRETE ENCASED CONDUIT
DB	DIRECT BURIED CONDUIT
FO	FIBER OPTIC CONDUIT
XXXX	CONCRETE ENCASED DUCT BANK WHERE XXXX IS THE DUCT BANK NAME. SEE CIRCUIT AND RACEWAY CODING DEFINITION
	CONCEALED CONDUIT ROUTING AREA
	CONDUIT ROUTING AREA
	CABLE TRAY
S	MEDIUM VOLTAGE LOOP SWITCH
J or HH	GENERAL CONTROL OR WIRING DEVICE. LETTER SYMBOLS OR ABBREVIATIONS INDICATE TYPE OF DEVICE.
CS	CONTROL STATION, SEE CONTROL DIAGRAMS FOR CONTROL DEVICE(S) REQUIRED.
30	NONFUSED DISCONNECT SWITCH, SIZE INDICATED, 3 POLE
60/40 F	FUSED DISCONNECT SWITCH, SIZE INDICATED (60/40, 60 = SWITCH RATING: 40 = FUSE RATING) 3 POLE
2	COMBINATION CIRCUIT BREAKER AND INDICATED) MAGNETIC STARTER, NEMA SIZE INDICATED

POWER SYSTEM PLAN-2

SYMBOL	DESCRIPTION
100/40 B	BREAKER, SEPARATELY MOUNTED, SIZE INDICATED (100/40, 100 = FRAME SIZE; 40 = TRIP RATING) 3 POLE
2	CONTACTOR, MAGNETIC, NEMA SIZE INDICATED
L 30	LIGHTING CONTACTOR, SIZE INDICATED
2	STARTER, MAGNETIC NEMA SIZE INDICATED
	CONVENIENCE RECEPTACLE - DUPLEX UNLESS NOTED OTHERWISE WP - WEATHERPROOF C - CLOCK HANGER TL - TWIST LOCK CRE - CORROSION RESISTANT SUBSCRIPT NUMBER AT RECEPTACLE INDICATES CIRCUIT
	240V RECEPTACLE
	CONVENIENCE RECEPTACLE - QUADRUPLEX
	MULTI OUTLET ASSEMBLY
	DUPLEX CONVENIENCE RECEPTACLE - FLUSH IN FLOOR
	CONVENIENCE RECEPTACLE, PEDESTAL, DUPLEX SINGLE FACE UNLESS INDICATED OTHERWISE
L20R 20	RECEPTACLE, SPECIAL PURPOSE - NEMA CONFIGURATION AND AMPERAGE INDICATED
T	THERMOSTAT
	METERING FACILITY
EUH	ELECTRIC UNIT HEATER
AC	ELECTRIC AIR CONDITIONER (SELF CONTAINED UNIT)

LIGHTING SYSTEM PLAN

SYMBOL	DESCRIPTION
1 or 1	LUMINAIRE, SEE SCHEDULE
1	LUMINAIRE, SEE SCHEDULE
1	LUMINAIRE WITH INTERNAL BATTERY BACKUP, SEE SCHEDULE
or	LUMINAIRE AND POLE, SEE SCHEDULE
PC or PC	"PC" INDICATES EXTERIOR FIXTURE CONTROLLED VIA REMOTE PHOTOCELL OR PHOTOCELL CONTROLLED CONTACTOR
or	WALL MOUNTED LUMINAIRE, SEE SCHEDULE
	FLOOD LIGHTS - AIM IN THE DIRECTION SHOWN
	STANDBY LIGHTING UNIT, FLUSH MOUNTED, SEE SCHEDULE
	STANDBY LIGHTING UNIT, SURFACE MOUNTED, SEE SCHEDULE
XX or	EXIT LIGHTS - FILLED SECTION INDICATES LIGHTED FACE, ARROW INDICATES EGRESS DIRECTIONAL INDICATORS, SEE DRAWINGS XX = FIXTURE NUMBER, SEE SCHEDULE
Sa or a -2	SMALL LETTER SUBSCRIPT AT SWITCH AND LUMINAIRE INDICATES SWITCHING. SUBSCRIPT NUMBER AT BOTTOM RIGHT OF LUMINAIRE INDICATES CIRCUIT IN PANELBOARD
S	WALL SWITCH: 2- DOUBLE POLE, 3- THREE WAY, 4- FOUR WAY, WP- WEATHERPROOF, EX- EXPLOSIONPROOF, M- MOTOR RATED, P- PILOT LIGHT, K- KEY OPERATED, D- DIMMER, CRE- CORROSION RESISTANT, L- MOMENTARY 3-WAY, MS- MANUAL STARTER WITH OVERLOADS
OS	OCCUPANCY SENSOR, SEE SCHEDULE
LC	LIGHTING CONTROLLER

FIRE ALARM SYSTEM PLAN AND RISER

SYMBOL	DESCRIPTION
F	FIRE ALARM STATION, MANUAL
FS	FIRE ALARM STATION, AUTOMATIC SMOKE DETECTOR
FH	FIRE ALARM STATION, AUTOMATIC, HEAT DETECTOR
F	FIRE ALARM BELL
F	FIRE ALARM HORN
F	FIRE ALARM HORN/STROBE LIGHT
F	FIRE ALARM STROBE LIGHT
D	AIR DUCT DETECTOR

TELEPHONE SYSTEM PLAN AND RISER

SYMBOL	DESCRIPTION
TTC	TELEPHONE TERMINAL CABINET
	TELEPHONE RECEPTACLE (OUTLET BOX ONLY) FLOOR BOX
	TELEPHONE RECEPTACLE (OUTLET BOX ONLY)
T	TELEPHONE SYSTEM RACEWAY

COMPUTER SYSTEM (DATA) PLAN AND RISER

SYMBOL	DESCRIPTION
CTC	COMPUTER SYSTEM TERMINAL CABINET
	COMPUTER NETWORK CONNECTION
	COMPUTER NETWORK CONNECTION, FLUSH IN FLOOR
D	DATA SYSTEM RACEWAY

COMBINED TELEPHONE/COMPUTER SYSTEM PLAN AND RISER

SYMBOL	DESCRIPTION
4	COMBINATION TELEPHONE/DATA RECEPTACLE, WALL MOUNTED, NUMBER OF PORTS INDICATED
4	COMBINATION TELEPHONE/DATA RECEPTACLE, FLOOR BOX, NUMBER OF PORTS INDICATED

CLOSED CIRCUIT/TELEVISION CABLE PLAN AND RISER

SYMBOL	DESCRIPTION
	COMBINATION CLOSED CIRCUIT TELEVISION RECEPTACLE (CCTV) AND DUPLEX CONVENIENCE RECEPTACLE IN TWO GANG BOX WITH BARRIER, 12" DOWN FROM CEILING
	COMBINATION TELEVISION CABLE RECEPTACLE (TV) AND DUPLEX CONVENIENCE RECEPTACLE IN TWO GANG BOX WITH BARRIER, 12" DOWN FROM CEILING
	CLOSED CIRCUIT TELEVISION RECEPTACLE, FLOOR BOX
	TELEVISION CABLE RECEPTACLE, FLOOR BOX

SOUND SYSTEM PLAN AND RISER

SYMBOL	DESCRIPTION
S	SPEAKER, CONE TYPE, RECESSED IN CEILING, SEE ARCHITECTURAL DRAWINGS FOR CEILING TYPE
S	SPEAKER, CONE TYPE, WALL MOUNTED
S	SPEAKER, CONE TYPE, SURFACE MOUNTED
V	VOLUME CONTROL, WALL MOUNT 5'-0" AFF
S	INTERIOR PAGING TRUMPET SOUND REPRODUCER WITH REMOTE AMPLIFIER, SURFACE MOUNTED
M	MICROPHONE OUTLET
S	SOUND SYSTEM RACEWAY
S	COMMUNICATION STATION

RECORD DRAWINGS

Revisions Drawn By D WELLS Date 7/16/12

THESE RECORD DRAWINGS HAVE BEEN PREPARED, IN PART, ON THE BASIS OF INFORMATION COMPILED BY OTHERS. THEY ARE NOT INTENDED TO REPRESENT IN DETAIL THE EXACT LOCATION, TYPE OF COMPONENT NOR MANNER OF CONSTRUCTION. THE ENGINEER WILL NOT BE RESPONSIBLE FOR ANY ERRORS OR OMISSIONS WHICH HAVE BEEN INCORPORATED INTO THE RECORD DRAWINGS.

SECURITY SYSTEM PLAN AND RISER

SYMBOL	DESCRIPTION
CR	CARD KEY ACCESS
DS	DOOR SWITCH
MON	MONITOR
CS	CONTROL STATION
	VIDEO CAMERA
PCR	PROXIMITY CARD READER
BMS	BALANCED MAGNETIC SWITCH
PIR	PASSIVE INFRARED READER
DLM	DOOR LATCH MONITOR
DLR	DOOR LATCH RETRACTOR

GROUND SYSTEM PLAN

SYMBOL	DESCRIPTION
	GROUND ROD
	GROUND ROD IN TEST WELL
G	GROUNDING CONDUCTOR, SIZE AS INDICATED
TA	CABLE TO CABLE TEE
XA	CABLE TO CABLE CROSS
	PLATE ADAPTER
XJ	CABLE TO REINFORCING STEEL
GT	GROUND ROD TO CABLE
	FLEXIBLE GROUND STRAP
GP	CABLE TO PIPE (BOLTED CONNECTION)
GF	CABLE TO FLAT
WA	CABLE TO STEEL SURFACE
GR	CABLE TO TOP OF GROUND ROD
SS	PARALLEL SPLICE
	PIGTAIL FOR CONNECTION TO EQUIPMENT CABINET OR FRAME
G	EQUIPMENT GROUND BUS
N	EQUIPMENT NEUTRAL BUS
LA	CABLE TO LUG
PF	CABLE TO PREFAB BUILDING GROUNDING MEANS

C. NICHOLSON LICENSE No. 66901 STATE OF FLORIDA PROFESSIONAL ENGINEER

NO.	DATE	DSGN	DR	CHK	APVD	BY	APVD
		J LEWIS	A CLOUGH	M GOSLOW			DC NICHOLSON

REVISION

©CH2M HILL 2010. ALL RIGHTS RESERVED.
REUSE OF DOCUMENTS: THIS DOCUMENT AND THE IDEAS AND DESIGNS INCORPORATED HEREIN, AS AN INSTRUMENT OF PROFESSIONAL SERVICE, IS THE PROPERTY OF CH2M HILL AND IS NOT TO BE USED, IN WHOLE OR IN PART, FOR ANY OTHER PROJECT WITHOUT THE WRITTEN AUTHORIZATION OF CH2MHILL.

3011 SW WILLISTON RD
GAINESVILLE, FLORIDA 32608
EB0000072 AAC001992
DAVID C NICHOLSON PE 60201

SOLID WASTE SYSTEM
UPGRADE DESIGN
PASCO COUNTY
PASCO COUNTY, FLORIDA

CH2MHILL

GENERAL
ELECTRICAL LEGEND
SHEET 2

VERIFY SCALE
BAR IS ONE INCH ON ORIGINAL DRAWING.
0 1"

DATE	AUGUST 2012
PROJ	378217
DWG	00-G-009
SHEET	

RECORD DRAWINGS FOR PERMIT

INSTRUMENT IDENTIFICATION

EXAMPLE SYMBOLS

UP	UNIT PROCESS NUMBER
F	FIRST LETTER(S)
IT	SUCCEEDING LETTER(S)
BB	CLARIFYING ABBREVIATIONS
LL	LOOP NUMBER
UU	UNIT NUMBER
S	SET LETTER (USED WHEN THERE ARE MULTIPLE DEVICES WITH THE SAME UNIT NUMBER)

GENERAL INSTRUMENT OR FUNCTIONAL SYMBOLS

FIELD MOUNTED

REAR-OF-PANEL MOUNTED (OPERATOR INACCESSIBLE)

PANEL MOUNTED (OPERATOR ACCESSIBLE)

MCC MOUNTED

COMPUTER FUNCTION

PLC FUNCTION

SHARED DISPLAY, SHARED CONTROL

SPECIAL CASES

TRAFFIC CONTROL LIGHT
RED AND GREEN (TWO LIGHTS TOTAL)

ON AND OFF EVENT LIGHTS
(TWO LIGHTS TOTAL)

OPENED AND CLOSED
POSITION LIGHTS

OPENED AND CLOSED
POSITION SWITCHES

ON-OFF HAND SWITCH.
MAINTAINED CONTACT SWITCH
(CONTROLLED DEVICE WILL
RESTART ON RETURN ON POWER
AFTER POWER FAILURE).

STOP-START HAND SWITCH
MOMENTARY CONTACT
SWITCHES (CONTROLLED DEVICE
WILL NOT RESART ON RETURN OF
POWER AFTER POWER FAILURE).

REF-OFF-GREEN
3-POSITION SELECTOR
SWITCH

LOCK-OUT-SWITCH

RECORD DRAWINGS

Revisions Drawn By D WELLS Date 7/16/12

THESE RECORD DRAWINGS HAVE BEEN PREPARED, IN PART, ON THE BASIS OF INFORMATION COMPILED BY OTHERS. THEY ARE NOT INTENDED TO REPRESENT IN DETAIL THE EXACT LOCATION, TYPE OF COMPONENT NOR MANNER OF CONSTRUCTION. THE ENGINEER WILL NOT BE RESPONSIBLE FOR ANY ERRORS OR OMISSIONS WHICH HAVE BEEN INCORPORATED INTO THE RECORD DRAWINGS.

INSTRUMENT IDENTIFICATION LETTERS TABLE

LETTER	FIRST-LETTER: PROCESS OR INITIATING VARIABLE	FIRST-LETTER: MODIFIER	SUCCEEDING-LETTERS: READOUT OR PASSIVE FUNCTION	SUCCEEDING-LETTERS: OUTPUT FUNCTION	SUCCEEDING-LETTERS: MODIFIER
A	ANALYSIS (+)		ALARM		
B	BURNER, COMBUSTION		USER'S CHOICE (*)	USER'S CHOICE (*)	USER'S CHOICE (*)
C	CONTROL	DISPLAY		CONTROL	
D	DENSITY (S.G)	DIFFERENTIAL	DISPLAY		
E	VOLTAGE		PRIMARY ELEMENT, SENSOR		
F	FLOW RATE	RATIO (FRACTION)			
G	USER'S CHOICE(*)		GLASS, GAUGE VIEWING DEVICE	GATE	
H	HAND (MANUAL)				HIGH
I	CURRENT (ELECTRICAL)		INDICATE		
J	POWER	SCAN			
K	TIME, TIME SCHEDULE	TIME RATE OF CHANGE		CONTROL STATION	
L	LEVEL		LIGHT (PILOT)		LOW
M	MOTION	MOMENTARY			MIDDLE, INTERMEDIATE
N	TORQUE		USER'S CHOICE (*)	USER'S CHOICE (*)	USER'S CHOICE (*)
O	USER'S CHOICE (*)		ORIFICE, RESTRICTION		
P	PRESSURE, VACUUM		POINT (TEST) CONNECTION		
Q	QUANTITY	INTEGRATE, TOTALIZE			
R	RADIATION		RECORD OR PRINT		
S	SPEED, FREQUENCY	SAFETY		SWITCH	
T	TEMPERATURE			TRANSMIT	
U	MULTIVARIABLE		MULTIFUNCTION	MULTIFUNCTION	MULTIFUNCTION
V	VIBRATION, MECHANICAL ANALYSIS			VALVE, DAMPER, LOUVER	
W	WEIGHT		WELL		
X	MESSAGE	X AXIS	UNCLASSIFIED (+)	UNCLASSIFIED (+)	UNCLASSIFIED (+)
Y	EVENT, STATE OR PRESENCE	Y AXIS		RELAY, COMPUTE, CONVERT	
Z	POSITION	Z AXIS		DRIVE, ACTUATOR, UNCLASSIFIED FINAL CONTROL ELEMENT	

TABLE BASED ON THE INSTRUMENTATION, SYSTEMS, AND AUTOMATION SOCIETY (ISA) STANDARD.

(+) WHEN USED, EXPLANATION IS SHOWN ADJACENT TO INSTRUMENT SYMBOL. SEE ABBREVIATIONS AND LETTER SYMBOLS.

(*) WHEN USED, DEFINE THE MEANING HERE FOR THE PROJECT

ACCESSORY DEVICES

EXAMPLE: TRANSMITTER AS AN ACCESSORY TO A FLOW ELEMENT

A	=	ALARM
C	=	CONTROLLER
I	=	INDICATOR
R	=	RECORDER
S	=	SWITCH
T	=	TRANSMITTER
X	=	UNCLASSIFIED

TRANSDUCERS

A	ANALOG	I	CURRENT
D	DIGITAL	P	PNEUMATIC
E	VOLTAGE	PF	PULSE FREQUENCY
F	FREQUENCY	PD	PULSE DURATION
H	HYDRAULIC	R	RESISTANCE

EXAMPLE:

CURRENT TO PNEUMATIC TRANSDUCER (BACK OF PANEL, IN A FLOW LOOP)

DIGITAL SYSTEM INTERFACES

▲	ANALOG INPUT	WHERE X=	
▼	ANALOG OUTPUT	A	= ALARM
$\triangle_X$	DISCRETE INPUT	H	= MAINTAINED
∇_X	DISCRETE OUTPUT	M	= MOMENTARY
		S	= STATUS

LINE LEGEND

- PROCESS (CLOSED CONDUIT, DASHED LINE INDICATES ALTERNATE FLOW STREAM)
- PROCESS (OPEN CHANNEL)
- ANALOG SIGNAL (4 TO 20 mAdc, ETC.)
- DISCRETE SIGNAL (ON/OFF, ETC.)
- PNEUMATIC SIGNAL
- FILLED SYSTEM SIGNAL
- HYDRAULIC SYSTEM SIGNAL
- DATA LINK
- P — POWER
- MSC — MANUFACTURER SUPPLIED CABLE
- SIMILAR PROCESS OR FACILITY BOUNDARY
- PACKAGE SYSTEM EQUIPMENT

PARALLELING LINES

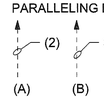

(A) TOTAL OF 2 SIGNALS

(B) 3 TYPICAL SETS OF 2 SIGNALS EACH. TOTAL OF 6 SIGNALS.

CONNECTING LINES

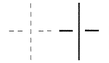
NON-CONNECTING LINES

INTERFACE SYMBOLS

PROCESS FLOW SIGNAL

A = PROCESS INTERFACE LETTER

a = SIGNAL INTERFACE LETTER

D = DESTINATION DRAWING NO.

S = SOURCE DRAWING NO.

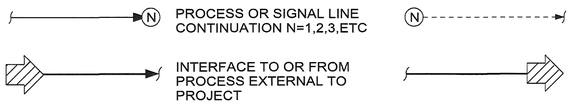

PROCESS OR SIGNAL LINE CONTINUATION N=1,2,3,ETC

INTERFACE TO OR FROM PROCESS EXTERNAL TO PROJECT

SELF CONTAINED EQUIPMENT TAG NUMBERS

W-D-X-Y

W = UNIT PROCESS NUMBER

D:

FVC	= FIXED VIDEO CAMERA
PVC	= PAN/TILT/ZOOM VIDEO CAMERA
OWS	= OPERATOR WORKSTATION
ENS	= ETHERNET SWITCH
FOPP	= FIBER OPTIC PATCH PANEL
INC	= INTERCOM
CAT6 PP	= CAT6 PATCH PANEL
RJ45 PP	= RJ45 PATCH PANEL
PRT	= PRINTER
WS	= WEATHER STATION
WD	= WEATHER DISPLAY

X = LOOP NUMBER

Y = UNIT NUMBER

GENERAL NOTES

1. COMPONENTS AND PANELS SHOWN WITH A ASTERISK (✳) ARE PART OF A PACKAGE SYSTEM; SEE EQUIPMENT SPECIFICATIONS. FOR MULTIPLE PACKAGES ON SAME DRAWING, USE ✳, ✳2, ✳3, ETC.
2. COMPONENTS SHOWN WITH A DIAMOND (◆) ARE PART OF SECTION 27 10 00, STRUCTURED CABLING SYSTEM.
3. COMPONENTS SHOWN WITH A DOUBLE DIAMOND (◆◆) ARE PART OF SECTION 28 23 13, CLOSED CIRCUIT TELEVISION SYSTEM
4. THIS IS A STANDARD LEGEND. THEREFORE, NOT ALL OF THIS INFORMATION MAYBE USED ON THIS PROJECT.
5. COMPONENTS SHOWN WITHOUT (✳) OR (◆) TYPE DESIGNATION ARE PROVIDED BY THE CONTRACTOR AS SHOWN AND NOTED.

ABBREVIATIONS & LETTER SYMBOLS

AC	ALTERNATING CURRENT
CL	CONTROL LIGHT
COO	CLOSED-OFF-OPEN
CP-X	CONTROL PANEL NO. X
CS	CONTROL STATION
DC	DIRECT CURRENT
DVR	DIGITAL VIDEO RECORDER
FOCR	FIBER OPTIC CARD RACK
FVC	FIXED VIDEO CAMERA
HH	HAND HOLE
INC	INTERCOM
IR	INFRARED
LCP	LOCAL CONTROL PANEL
LEL	LOWER EXPLOSIVE LIMIT
LOS	LOCKOUT STOP
KP	KEY PAD
MCC-X	MOTOR CONTROL CENTER NO. X
MSC	MANUFACTURER SUPPLIED CABLE
OWS	OPERATOR WORK STATION
POE	POWER-OVER-ETHERNET
PVC	PAN/TILT/ZOOM VIDEO CAMERA
PWS	POWER SUPPLY
R/G	RED/GREEN
ROG	RED/OFF/GREEN
SID	SERIAL INTERFACE DEVICE
STP	SHIELDED TWISTED PAIR
TJB	TERMINAL JUNCTION BOX
UPS	UNINTERRUPTIBLE POWER SUPPLY
UTP	UNSHIELDED TWISTED PAIR
W-FP-X	FIELD PANEL NO. WX (W = UNIT PROCESS NUMBER X = PANEL NUMBER)
WT	WEIGHT TRANSMITTER
XD	MESSAGE DISPLAY

NORMAN E ANDERSON LICENSED No. 71642 STATE OF FLORIDA PROFESSIONAL ENGINEER

NO.	DATE	DSGN	REVISION	CHK	APVD	BY
DR	N ANDERSON	A CLOUGH	W PHILLIPS	APVD	N ANDERSON	

©CH2M HILL 2010. ALL RIGHTS RESERVED.

REUSE OF DOCUMENTS: THIS DOCUMENT, AND THE IDEAS AND DESIGNS INCORPORATED HEREIN, AS AN INSTRUMENT OF PROFESSIONAL SERVICE, IS THE PROPERTY OF CH2M HILL AND IS NOT TO BE USED, IN WHOLE OR IN PART, FOR ANY OTHER PROJECT WITHOUT THE WRITTEN AUTHORIZATION OF CH2MHILL

RECORD DRAWINGS FOR PERMIT

CH2MHILL

3011 SW WILLISTON RD.
GAINESVILLE, FLORIDA 32608
EB0000072 AAC001992
NORMAN E ANDERSON - PE 71642

SOLID WASTE SYSTEM
UPGRADE DESIGN
PASCO COUNTY
PASCO COUNTY, FLORIDA

GENERAL
INSTRUMENTATION AND CONTROL
LEGEND 1

VERIFY SCALE

BAR IS ONE INCH ON ORIGINAL DRAWING. 0 1"

DATE	AUGUST 2012
PROJ	378217
DWG	00-G-010
SHEET	

CCTV SYMBOLS

CCTV FIXED CAMERA:
T: S= SCOOP/WEDGE
C = CORNER
D = DOME
B = BOARD
E = ENVIRONMENTAL
I = INDOOR

CCTV CAMERA WITH PAN/TILT/ZOOM:
T: D = DOME. INDOOR
E = ENVIRONMENTAL

CCTV VIDEO DISPLAY

VALVE SYMBOLS

GATE

BALL

SEAT PORT
ECCENTRIC PLUG

SWING CHECK

BALL CHECK

PRIMARY ELEMENT SYMBOLS

ELECTROMAGNETIC FLOWMETER

GENERIC

LEVEL (FLOAT)

LEVEL

PUMP AND COMPRESSOR SYMBOLS

SUBMERSIBLE SUMP PUMP

RECORD DRAWINGS

Revisions Drawn By D WELLS Date 7/16/12

THESE RECORD DRAWINGS HAVE BEEN PREPARED, IN PART, ON THE BASIS OF INFORMATION COMPILED BY OTHERS. THEY ARE NOT INTENDED TO REPRESENT IN DETAIL THE EXACT LOCATION, TYPE OF COMPONENT NOR MANNER OF CONSTRUCTION. THE ENGINEER WILL NOT BE RESPONSIBLE FOR ANY ERRORS OR OMISSIONS WHICH HAVE BEEN INCORPORATED INTO THE RECORD DRAWINGS.

MISCELLANEOUS SYMBOLS

PLUG

120V — 120 VOLT, 60 HZ POWER

RECEPTACLE

480V — 480 VOLT, 3-PHASE, 60 HZ POWER

HORN

SSX — SURGE SUPPRESSOR, TYPE X SEE SPECIFICATION SECTION 28 13 53 OR 27 10 00FOR DESCRIPTION OF TYPE

FFLCP-LL-X — PANEL CONTINUED ON SAME OR OTHER DRAWING; PANEL OUTLINE; PANEL NAME

GROUND CONNECTION

FLEXIBLE CONNECTION

M — INTERCOM:
M: MOUNTING
D= DESK
P= PEDESTAL
S= SURFACE
W= WALL

DIAPHRAGM SEAL

BLIND FLANGE

V — VENT TO ATMOSPHERE

PIPE CAP

AIR GAP

HORN

F — FLUSHING CONNECTION

UPS — UNINTERRUPTIBLE POWER SUPPLY

S/U — SERIAL (RS-232) TO USB CONVERTER

NETWORK AND COMPUTER SYMBOLS

WORKSTATION

PRINTER

DATACOM OUTLET

TELEPHONE

CABLE IDENTIFICATION

-------S-------	SERIAL CABLE
-------P-------	POWER
------MSC------	MANUFACTURER SUPPLIED CABLE
———CX———	CCTV - COAXIAL CABLE
——— E ———	FAST ETHERNET CAT 6 STP
———V1———	PUBLIC TELEPHONE SYSTEM - CAT6 STP
——— F2B ———	CCTV NETWORK - 50/125 MICRON MULTIMODE 2-FIBER BREAKOUT CABLE
——— F2D ——— (XX/YY)	CCTV NETWORK - 50/125 MICRON MULTIMODE DISTRIBUTION CABLE
(XX/YY)	(USED FIBER/ TOTAL FIBERS)
———KVM———	KEYBOARD/VIDEO/MOUSE CABLE CONNECTIONS-CAT 6
———KVMB———	KVM BREAKOUT CABLES - MANUFACTURER'S STANDARD

FLOW STREAM IDENTIFICATION

———RFR———	RAINFALL RUNOFF
———SPD———	SUMP PUMP DISCHARGE
———VAR———	VENT AIR RELEASE
———VENT———	VENT/VENT RISER
——— W1 ———	POTABLE WATER
——— W2 ———	UTILITY WATER (BACKFLOW PREVENTED)
———WDW———	WASHDOWN WATER

NORMAN E ANDERSON LICENSE No. 71642 STATE OF FLORIDA PROFESSIONAL ENGINEER

NO.	DATE	DSGN	DR	REVISION	CHK	APVD	BY	APVD
		N ANDERSON		A CLOUGH	W PHILLIPS			N ANDERSON

©CH2M HILL 2010. ALL RIGHTS RESERVED.
THE IDEAS AND DESIGNS INCORPORATED HEREIN, AS AN INSTRUMENT OF PROFESSIONAL SERVICE, IS THE PROPERTY OF CH2M HILL AND IS NOT TO BE USED, IN WHOLE OR IN PART, FOR ANY OTHER PROJECT WITHOUT THE WRITTEN AUTHORIZATION OF CH2M HILL.
REUSE OF DOCUMENTS: THIS DOCUMENT, AND THE IDEAS AND DESIGNS

3011 SW WILLISTON RD
GAINESVILLE, FLORIDA 32608
EB0000072 AAC001992
NORMAN E ANDERSON - PE 71642

SOLID WASTE SYSTEM
UPGRADE DESIGN
PASCO COUNTY
PASCO COUNTY, FLORIDA

CH2MHILL

GENERAL
INSTRUMENTATION AND CONTROL
LEGEND 2

VERIFY SCALE

BAR IS ONE INCH ON ORIGINAL DRAWING.
0 1"

DATE	AUGUST 2012
PROJ	378217
DWG	00-G-011
SHEET	

RECORD DRAWINGS FOR PERMIT

RECORD DRAWINGS

Revisions Drawn By D WELLS Date 7/16/12

THESE RECORD DRAWINGS HAVE BEEN PREPARED, IN PART, ON THE BASIS OF INFORMATION COMPILED BY OTHERS. THEY ARE NOT INTENDED TO REPRESENT IN DETAIL THE EXACT LOCATION, TYPE OF COMPONENT NOR MANNER OF CONSTRUCTION. THE ENGINEER WILL NOT BE RESPONSIBLE FOR ANY ERRORS OR OMISSIONS WHICH HAVE BEEN INCORPORATED INTO THE RECORD DRAWINGS.

CONTROL POINT #1
4"x4" CONCRETE
MONUMENT STAMPED
POINT #1718
NORTH: 1469484.357
EAST: 317416.614
ELEVATION = 51.599

N

0 100 200 300

NOTE:

CONTRACTOR TO COORDINATE STAGING AREA WITH THE COUNTY.

SEE DWG 05-C-103

DEMOLISH EXISTING WALLS AND CONSTRUCT NEW 8' HIGH PUSH WALL

RECYCLING AREA

EXISTING STORMWATER MANAGEMENT POND

EXISTING CLASS III LANDFILL

SEE DWG 05-C-102 AND 05-C-105

SEE DWG 05-C-104 AND 05-C-106

EXISTING PROPERTY LINE

NEW CHAIN LINK FENCE

EXISTING SCALE HOUSE. DEMOLISH EXISTING SCALES. CONSTRUCT ROOFED PATIO.

EXISTING WATER WELL

EXISTING LEACHATE PUMP STATION

DRY RETENTION POND 4

NEW GATE

RAIN SHED

RECYCLE BOX AREA

ATTENDANT BUILDING WITH GARAGE

PARKING AREA

PROPOSED CDO

HAUL ROAD

CONTROL POINT #1
4"x4" CONCRETE
MONUMENT STAMPED
POINT #1711
NORTH: 1468175.87
EAST: 316092.91
ELEVATION = 43.448

DRY RETENTION POND 1

RETURN ROUTE

EXIT SCALE BYPASS

NEW CANOPY

NEW GATE

DRY RETENTION POND 2

NEW SCALE HOUSE

PARKING AREA

ENTRANCE SCALE BYPASS

NEW SCALES

NEW CHAIN LINK FENCE AND GATE

DRY RETENTION POND 3

PROPOSED CDO AREA - ALTERNATE BID ITEM

STATIONARY COMPACTOR AND OPEN TOP BOX BAYS, TYP

NEW CANOPY

RICHARD THOMAS MORRISON PROFESSIONAL ENGINEER
LICENSE No. 67713
STATE OF FLORIDA

NO.	DATE	REVISION	BY	APVD
DSGN	R MORRISON	DR	R MORRISON	CHK	C KOHLER	APVD	R MORRISON

©CH2M HILL 2010. ALL RIGHTS RESERVED.
REUSE OF DOCUMENTS: THIS DOCUMENT, AND THE IDEAS AND DESIGNS INCORPORATED HEREIN, AS AN INSTRUMENT OF PROFESSIONAL SERVICE, IS THE PROPERTY OF CH2M HILL AND IS NOT TO BE USED, IN WHOLE OR IN PART, FOR ANY OTHER PROJECT WITHOUT THE WRITTEN AUTHORIZATION OF CH2MHILL.

RECORD DRAWINGS FOR PERMIT

3011 SW WILLISTON RD
GAINESVILLE, FLORIDA 32608
EB0000072 AAC001992
Richard Thomas Morrison PE 67713

SOLID WASTE SYSTEM
UPGRADE DESIGN
PASCO COUNTY
PASCO COUNTY, FLORIDA

CH2MHILL

CIVIL
WEST PASCO SITE
GENERAL SITE LAYOUT

VERIFY SCALE
BAR IS ONE INCH ON ORIGINAL DRAWING.
0 1"

DATE	AUGUST 2012
PROJ	378217
DWG	05-C-101
SHEET	

NDM SERVER: GNV FILENAME: dn05C101_378217.dgn PLOT DATE: 8/3/2012 PLOT TIME: 11:11:33 AM

RECORD DRAWINGS

Revisions Drawn By D WELLS Date 7/16/12

THESE RECORD DRAWINGS HAVE BEEN PREPARED, IN PART, ON THE BASIS OF INFORMATION COMPILED BY OTHERS. THEY ARE NOT INTENDED TO REPRESENT IN DETAIL THE EXACT LOCATION, TYPE OF COMPONENT NOR MANNER OF CONSTRUCTION. THE ENGINEER WILL NOT BE RESPONSIBLE FOR ANY ERRORS OR OMISSIONS WHICH HAVE BEEN INCORPORATED INTO THE RECORD DRAWINGS.

NOTE: SEE GRADING, DRAINAGE, AND EROSION CONTROL PLANS FOR POND GRADING

N 1468213.80
E 316394.45

DO NOT ENTER SIGN

N 1468089.47
E 316381.63

N 1468152.09
E 316396.67

N 1468062.71
E 316355.31

N 1467977.49
E 316319.38

N 1467972.68
E 316305.26

N 1467957.86
E 316306.92

N 1467869.96
E 316218.54

N 1467839.47
E 316260.91

N 1467781.32
E 316179.90

N 1467664.10
E 316083.24

10'

R 120'

MATCH EXISTING PAVEMENT 3212-215

R 40'

R 200'

RETURN ROUTE

N 1467814.23
E 316251.38

N 1467746.00
E 316174.20

N 1467787.89
E 316240.50

R 80'

R 220'

N 1467966.76
E 316336.30

R 6'

EXISTING FENCE TO BE REMOVED, TYP.

N 1468129.87
E 316426.97

R 50'

STOP SIGN/DO NOT ENTER SIGN

R 70'

N 1467761.97
E 316222.64

N 1467783.43
E 316251.29

R 62'

R 6'

N 1467825.06
E 316236.01

POND 1

N 1467947.12
E 316323.83

N 1467953.74
E 316359.15

N 1467952.38
E 316350.78

N 1467950.18
E 316364.11

N 1468151.80
E 316489.74

MATCH EXISTING PAVEMENT 3212-215

R 20'

N 1467754.36
E 316258.44

POND 1 BOTTOM CONTOUR EL 45

N 1467941.78
E 316365.50

R 6'

N 1467921.69
E 316379.12

ASPHALT PAVEMENT 3212-210

N 1467969.84
E 316466.21

N 1467697.78
E 316230.20

N 1467604.04
E 316200.70

N 1467690.97
E 316234.06

R 5'

EXIT SCALE BYPASS

6" DOUBLE YELLOW STRIPES

MATCH EXISTING PAVEMENT 3212-215

1-1/2" W1 WATER LINE

2" SPD (PVC) SANITARY SEWER LINE

30 FOOT MOTORIZED CANTILEVER SLIDE GATE WITH GARAGE DOOR TYPE REMOTE 3231-425

SEE DWG 05-C-103 FOR ENLARGEMENT

NEW SCALE

SEE DWG 10-P-101 FOR UTILITY CONNECTIONS AT BUILDING

10' TYP

45° TYP

45° BEND
INV. = 46.0

N 1467998.17
E 316512.10

STOP SIGN

R 5'

NEW CANOPY

NEW SCALE HOUSE

NEW SCALE

INV. 48.0

6" DOUBLE YELLOW STRIPES

18" YELLOW STRIPES, TYP

18" YELLOW STRIPES, TYP

N 1467897.86
E 316460.88

N 1467956.55
E 316484.64

N 1467990.33
E 316516.21

N 1468147.49
E 316615.51

PEDESTRIAN GATE (ALTERNATE BID ITEM) 3231-420

FIELD LOCATE AND CONNECT TO EXISTING WATER LINE AS REQUIRED

EXISTING SCALE HOUSE AND SCALE. DEMOLISH EXISTING SCALE. PAVE DEMOLISHED AREA WITH ASPHALT PAVEMENT. 3212-210

N 1468012.78
E 316543.98

REPLACE EXISTING WATER WELL 1

MATCH EXISTING PAVEMENT 3212-215

N 1468074.64
E 316646.24

N 1468049.64
E 316670.65

N 1468047.99
E 316690.65

R 4'

R 100'

30'

N 1467708.94
E 316384.48

N 1467772.35
E 316421.77

N 1467796.99
E 316420.05

CONTRACTOR TO COORDINATE THE RELOCATION OF ELECTRIC POLE AND LINE WITH ELECTRIC COMPANY

N 1467922.15
E 316507.33

N 1467889.30
E 316482.02

N 1467960.33
E 316553.58

N 1467590.53
E 316219.45

N 1467587.09
E 316259.92

CONTRACTOR TO COORDINATE THE RELOCATION OF ELECTRIC POLE AND LINE WITH ELECTRIC COMPANY

6' HIGH CHAIN LINK FENCE 3231-410

N 1467639.08
E 316305.98

N 1467621.66
E 316321.53

N 1467743.70
E 316381.44

N 1467744.84
E 316388.42

R 14'

R 18'

POND 2

40'

12'

5'

20'

8'

N 1467791.07
E 316421.77

N 1467514.06
E 316291.27

EXISTING FIBER OPTIC BOX, CONTRACTOR TO VERIFY AND RELOCATE IF NECESSARY

N 1467990.33
E 316645.65

N 1468072.99
E 316716.24

N 1468147.17
E 316781.01

R 25'

STOP SIGN

N 1468015.33
E 316670.65

N 1468015.33
E 316690.65

KEYPAD CONTROLLED MOTORIZED 30 FOOT CANTILEVER SLIDE GATE WITH "EMPLOYEES ONLY" SIGN (LOCATION IF ALTERNATE BID ITEM CONSTRUCTED) 3231-425

EXISTING FENCE TO REMAIN

PEDESTRIAN GATE (ALTERNATE BID ITEM) 3231-420

6' HIGH CHAIN LINK FENCE (ALTERNATE BID ITEM) 3231-410

N 1467990.33
E 316715.65

PEDESTRIAN GATE (ALTERNATE BID ITEM) 3231-420

N 1468012.26
E 316780.87

1-1/2" W1 WATER LINE

N 1467939.66
E 316786.42

N 1467935.66
E 316782.55

N 1467915.53
E 316782.55

N 1467990.33
E 316825.09

N 1468005.93
E 316878.71

R 4'

DO NOT ENTER SIGN

R 100'

N 1467911.53
E 316786.55

EXISTING ELECTRICAL STUB OUT. CONTRACTOR TO VERIFY AND RELOCATE IF NECESSARY.

POND 3

MATCHLINE SEE DWG 05-C-104 FOR CONTINUATION

N 1467882.53
E 316557.03

N 1467793.35
E 316452.52

N 1467782.29
E 316433.93

N 1467772.06
E 316452.69

POND 2 BOTTOM CONTOUR EL 47

STRIPE AND SIGN PARKING AREA AND CROSSWALK PER FDOT INDEX 17346

OVERFLOW WEIR
N 1467758.95
E 316461.98

N 1467714.51
E 316398.42

N 1467736.06
E 316400.59

N 1467721.67
E 316416.35

N 1467810.86
E 316450.27

ENTRANCE SCALE BYPASS

KEYNOTES:

1. REMOVE AND REPLACE EXISTING WELL PUMP SYSTEM. PROVIDE A COMPLETE NEW SYSTEM INCLUDING WELL PUMP, DIAPHRAM TANK AND CONTROLS. HP AND VOLTAGE SHALL MATCH EXISTING PUMP. FIELD VERIFY HP, ELECTRICAL DATA, AND DEPTH OF WELL TO MAXIMUM DRAWDOWN LEVEL. EXISTING WELL CASING SIZE IS 4-INCH. PROVIDE 40-60 PSI SYSTEM OPERATING RANGE. PUMP SHALL BE GOULD SERIES GS, OR EQUAL BY MYERS. DIAPHRAM TANK SHALL BE GOULD V260, OR EQUAL BY MYERS, 84.9 GALLON TOTAL VOLUMN, 22.8 GALLON PUMP DOWN AT 40-60 PSI OPERATING RANGE. PUMP SHALL HAVE GPM RANGE OF 11 TO 14.

N
0 30 60 90

RICHARD THOMAS MORRISON LICENSE No. 67713 STATE OF FLORIDA PROFESSIONAL ENGINEER

NO.	DATE	DSGN	DR	CHK	APVD	BY	APVD
		R MORRISON	R MORRISON	C KOHLER	R MORRISON		

REVISION

©CH2M HILL 2010. ALL RIGHTS RESERVED.
REUSE OF DOCUMENTS: THIS DOCUMENT, AND THE IDEAS AND DESIGNS INCORPORATED HEREIN, AS AN INSTRUMENT OF PROFESSIONAL SERVICE, IS THE PROPERTY OF CH2M HILL AND IS NOT TO BE USED, IN WHOLE OR IN PART, FOR ANY OTHER PROJECT WITHOUT THE WRITTEN AUTHORIZATION OF CH2MHILL.

RECORD DRAWINGS FOR PERMIT

3011 SW WILLISTON RD
GAINESVILLE, FLORIDA 32608
EB00000172 AAC001992
Richard Thomas Morrison PE 67713

SOLID WASTE SYSTEM
UPGRADE DESIGN
PASCO COUNTY
PASCO COUNTY, FLORIDA

CH2MHILL

CIVIL
WEST PASCO SITE
SITE LAYOUT AND UTILITIES PLAN

VERIFY SCALE
BAR IS ONE INCH ON ORIGINAL DRAWING.
0 1"

DATE	AUGUST 2012
PROJ	378217
DWG	05-C-102
SHEET	

NDM SERVER: GNV FILENAME: dn05C102_378217.dgn PLOT DATE: 8/3/2012 PLOT TIME: 11:12:03 AM

RECORD DRAWINGS

Revisions Drawn By D WELLS Date 7/16/12

THESE RECORD DRAWINGS HAVE BEEN PREPARED, IN PART, ON THE BASIS OF INFORMATION COMPILED BY OTHERS. THEY ARE NOT INTENDED TO REPRESENT IN DETAIL THE EXACT LOCATION, TYPE OF COMPONENT NOR MANNER OF CONSTRUCTION. THE ENGINEER WILL NOT BE RESPONSIBLE FOR ANY ERRORS OR OMISSIONS WHICH HAVE BEEN INCORPORATED INTO THE RECORD DRAWINGS.

PROPERTY LINE

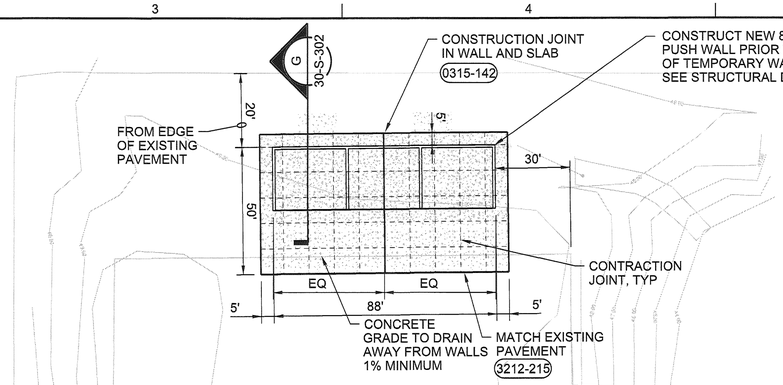

N

0 30 60 90

RECYCLING AREA

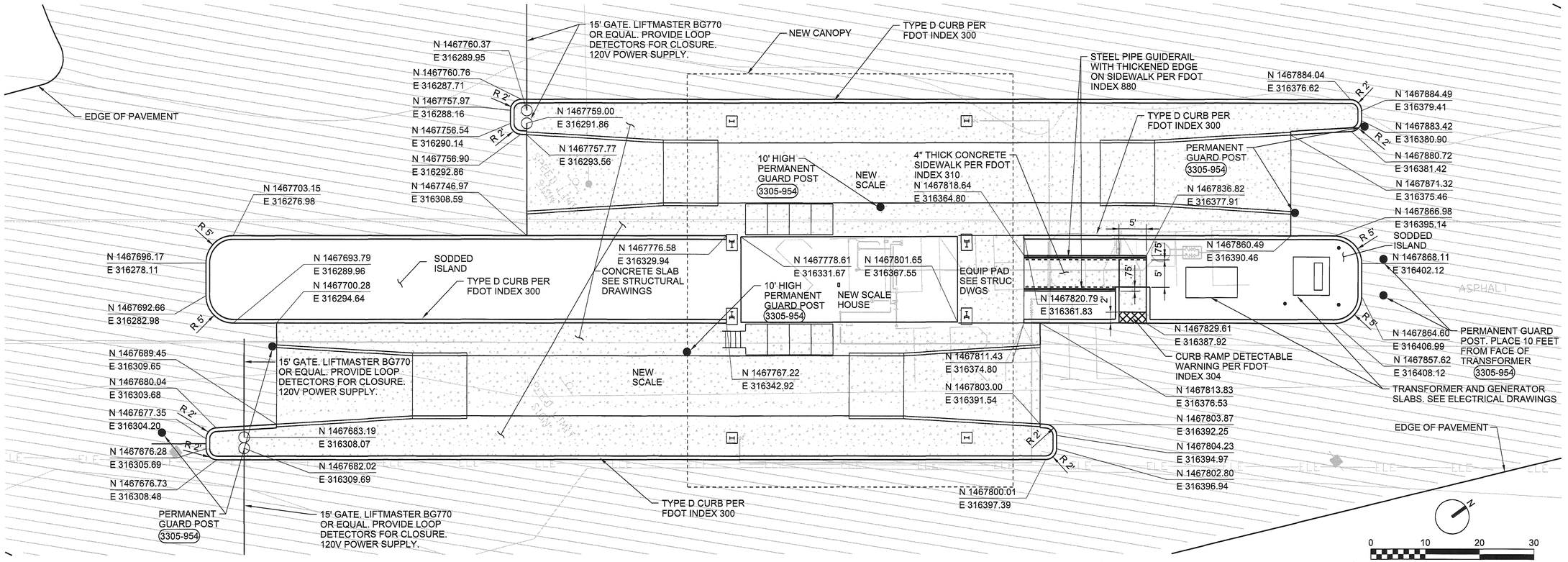

N

0 10 20 30

SCALEHOUSE ENLARGEMENT

RICHARD THOMAS MORRISON ★ ENGINEER ★ PROFESSIONAL
LICENSE No 67713 STATE OF FLORIDA

NO.	DATE	REVISION	BY	APVD
DSGN	R MORRISON	DR R MORRISON CHK C KOHLER APVD		R MORRISON

©CH2M HILL 2010. ALL RIGHTS RESERVED.
REUSE OF DOCUMENTS: THIS DOCUMENT, AND THE IDEAS AND DESIGNS INCORPORATED HEREIN, AS AN INSTRUMENT OF PROFESSIONAL SERVICE, IS THE PROPERTY OF CH2M HILL AND IS NOT TO BE USED, IN WHOLE OR IN PART, FOR ANY OTHER PROJECT WITHOUT THE WRITTEN AUTHORIZATION OF CH2MHILL.

3011 SW WILLISTON RD
GAINESVILLE, FLORIDA 32608
EB0000072 AAC001992
Richard Thomas Morrison PE 67713

SOLID WASTE SYSTEM
UPGRADE DESIGN
PASCO COUNTY
PASCO COUNTY, FLORIDA

CH2MHILL

CIVIL
WEST PASCO SITE
SITE LAYOUT AND UTILITIES PLAN

VERIFY SCALE
BAR IS ONE INCH ON ORIGINAL DRAWING.
0 1"

DATE	AUGUST 2012
PROJ	378217
DWG	05-C-103
SHEET	

RECORD DRAWINGS FOR PERMIT

FIELD LOCATE AND CONECT TO EXISTING 6" PVC LEACHATE FORCE MAIN WITH TAPPING SADDLE, CORPORATION STOP, AND BRASS NIPPLE

SEE DWG 30-P-101 FOR UTILITY CONNECTIONS AT BUILDING

2" SPD (PVC) SANITARY SEWER LINE

2" TEE
INV. 44.5
N 1468112.07
E 316913.44

90° BEND
INV. 44.5
N 1468073.97
E 316913.44

N 1468106.82
E 317000.24

N 1468088.05
E 316970.69

N 1468071.17
E 316981.42

N 1468063.97
E 316955.03

22.5° BEND
INV. 44.5

STRIPE AND SIGN PARKING AREA PER FDOT INDEX 17346

1-1/2" W1 WATER LINE

N 1468106.83
E 317037.55

N 1468123.23
E 317048.55

6'

POND 4 BOTTOM CONTOUR EL 47

ATTENDANT BUILDING WITH GARAGE

N 1468089.94
E 317010.96

PERMANENT GUARD POST PLACE AS CLOSE AS POSSIBLE TO ELECTRICAL EQUIPMENT.
3305-954

TWO PERMANENT GUARD POSTS SPACED 80" APART (CENTERED ON DISCONNECT SWITCH). PLACE 30" OFF OF WALL. TYPICAL EACH BAY.
3305-954

PROPOSED CDD

NEW CANOPY
N 1467993.19
E 317043.06

CONCRETE TO ASPHALT TRANSITION
3213-250

N 1467960.33
E 317010.96

ASPHALT PAVEMENT
3212-210

N 1467947.53
E 317035.88

CONTRACTOR TO COORDINATE THE RELOCATION OF ELECTRIC POLE AND LINE WITH ELECTRIC COMPANY

CONTRACTION JOINT, TYP
CONCRETE PAVEMENT
3213-240

N 1467939.53
E 317222.97

POND 3

36'

CONTRACTOR TO COORDINATE THE RELOCATION OF ELECTRIC POLE AND LINE WITH ELECTRIC COMPANY

STATIONARY COMPACTOR AND OPEN TOP BOX BAYS, TYP

6' HIGH CHAIN LINK FENCE
3231-410

OVERFLOW WEIR
N 1467893.53
E 317222.97

HAUL ROAD

SAW CUT PAVEMENT AND REMOVE EXISTING DRIVEWAY. BACKFILL WITH TOPSOIL AND SEED AND MULCH.

N 1468157.52
E 317230.67

N 1468157.55
E 317374.63

N 1468120.70
E 317223.11

N 1468122.83
E 317448.96

N 1468129.23
E 317418.56

POND 4

N 1468123.23
E 317417.69

N 1468127.41
E 317430.50

OLD RAIN SHED SLAB

RAIN SHED SLAB
3213-240

16'

24'

RETAINING WALL. SEE STRUCTURAL DRAWINGS.

MATCH EXISTING PAVEMENT
3212-215

N 1468157.23
E 317552.84

N 1468106.83
E 317552.78

CONTRACTOR TO COORDINATE THE RELOCATION OF ELECTRIC POLE AND LINE WITH ELECTRIC COMPANY

N 1468010.33
E 317573.52

EXISTING FENCE TO BE REMOVED, TYP.

POND 3 BOTTOM CONTOUR EL 41

N 1468156.93
E 317698.58

R 25'

STOP SIGN

N 1468132.33
E 317673.52

STOP SIGN MOUNTED TO WALL

PUSH WALLS, SEE STRUCTURAL DRAWINGS

BULKY HOUSEHOLD WASTE AREA

BULKY HOUSEHOLD WASTE AREA

NEW CANOPY

CONCRETE TO ASPHALT TRANSITION
3213-250

MATCHLINE SEE CONTINUATION BELOW

MATCHLINE SEE DWG 05-C-102 FOR CONTINUATION

N 1468156.87
E 317724.66

MATCH EXISTING PAVEMENT
3212-215

N 1468156.49
E 317894.66

16 FOOT MOTORIZED CANTILEVER SLIDE GATE WITH GARAGE DOOR TYPE REMOTE
3231-425

R 60'

N 1468132.33
E 317734.52

STOP SIGN

N 1468096.49
E 317834.52

N 1468096.87
E 317784.52

50'

N 1468060.33
E 317784.52

N 1468060.33
E 317834.52

N 1468010.33
E 317734.52

ASPHALT PAVEMENT
3212-210

EXISTING FENCE

EXISTING FIBER OPTIC LINE, CONTRACTOR TO VERIFY AND RELOCATE IF NECESSARY

R 50'

N 1468020.07
E 317746.12

N 1468006.02
E 317839.35

N 1468007.72
E 317867.28

N 1467985.92
E 317844.85

R 12'

N 1467982.75
E 317845.28

N 1467960.33
E 317734.52

R 112.8'

POND 3

EXISTING FENCE TO BE REMOVED, TYP.

N 1467958.71
E 317800.47

N 1467981.20
E 317814.91

N 1467947.53
E 317734.52

R 12'

N 1467923.53
E 317845.28

6' HIGH CHAIN LINK FENCE
3231-410

POND 3 BOTTOM CONTOUR EL 41

N 1467911.53
E 317833.28

N 1467882.53
E 317867.28

MATCHLINE SEE CONTINUATION ABOVE

RECORD DRAWINGS

Revisions Drawn By D WELLS Date 7/16/12

THESE RECORD DRAWINGS HAVE BEEN PREPARED, IN PART, ON THE BASIS OF INFORMATION COMPILED BY OTHERS. THEY ARE NOT INTENDED TO REPRESENT IN DETAIL THE EXACT LOCATION, TYPE OF COMPONENT NOR MANNER OF CONSTRUCTION. THE ENGINEER WILL NOT BE RESPONSIBLE FOR ANY ERRORS OR OMISSIONS WHICH HAVE BEEN INCORPORATED INTO THE RECORD DRAWINGS.

NOTE: SEE GRADING, DRAINAGE, AND EROSION CONTROL PLANS FOR POND GRADING

N

0 30 60 90

THOMAS MORRISON ★ RICHARD ★ PROFESSIONAL ENGINEER
LICENSE No 67713 STATE OF FLORIDA

NO.	DATE	DSGN
REVISION		
BY	APVD	
DR	CHK	APVD
R MORRISON	R MORRISON	C KOHLER

R MORRISON

© CH2M HILL 2010. ALL RIGHTS RESERVED.

THE IDEAS AND DESIGNS INCORPORATED HEREIN, AS AN INSTRUMENT OF PROFESSIONAL SERVICE, IS THE PROPERTY OF CH2M HILL AND IS NOT TO BE USED, IN WHOLE OR IN PART, FOR ANY OTHER PROJECT WITHOUT THE WRITTEN AUTHORIZATION OF CH2MHILL.

3011 SW WILLISTON RD
GAINESVILLE, FLORIDA 32608
EB00000072 AAC001992
Richard Thomas Morrison PE 67713

SOLID WASTE SYSTEM
UPGRADE DESIGN
PASCO COUNTY
PASCO COUNTY, FLORIDA

CH2MHILL

CIVIL
WEST PASCO SITE
SITE LAYOUT AND UTILITIES PLAN

REUSE OF DOCUMENTS: THIS DOCUMENT, AND THE IDEAS AND DESIGNS INCORPORATED HEREIN, AS AN INSTRUMENT OF PROFESSIONAL SERVICE, IS THE PROPERTY OF CH2M HILL AND IS NOT TO BE USED, IN WHOLE OR IN PART, FOR ANY OTHER PROJECT WITHOUT THE WRITTEN AUTHORIZATION OF CH2MHILL.

RECORD DRAWINGS FOR PERMIT

VERIFY SCALE

BAR IS ONE INCH ON ORIGINAL DRAWING.
0 1"

DATE	AUGUST 2012
PROJ	378217
DWG	05-C-104
SHEET	

NDM SERVER: GNV FILENAME: dn05C104_378217.dgn PLOT DATE: 8/3/2012 PLOT TIME: 11:12:20 AM

RECORD DRAWINGS

Revisions Drawn By D WELLS Date 7/16/12

THESE RECORD DRAWINGS HAVE BEEN PREPARED, IN PART, ON THE BASIS OF INFORMATION COMPILED BY OTHERS. THEY ARE NOT INTENDED TO REPRESENT IN DETAIL THE EXACT LOCATION, TYPE OF COMPONENT NOR MANNER OF CONSTRUCTION. THE ENGINEER WILL NOT BE RESPONSIBLE FOR ANY ERRORS OR OMISSIONS WHICH HAVE BEEN INCORPORATED INTO THE RECORD DRAWINGS.

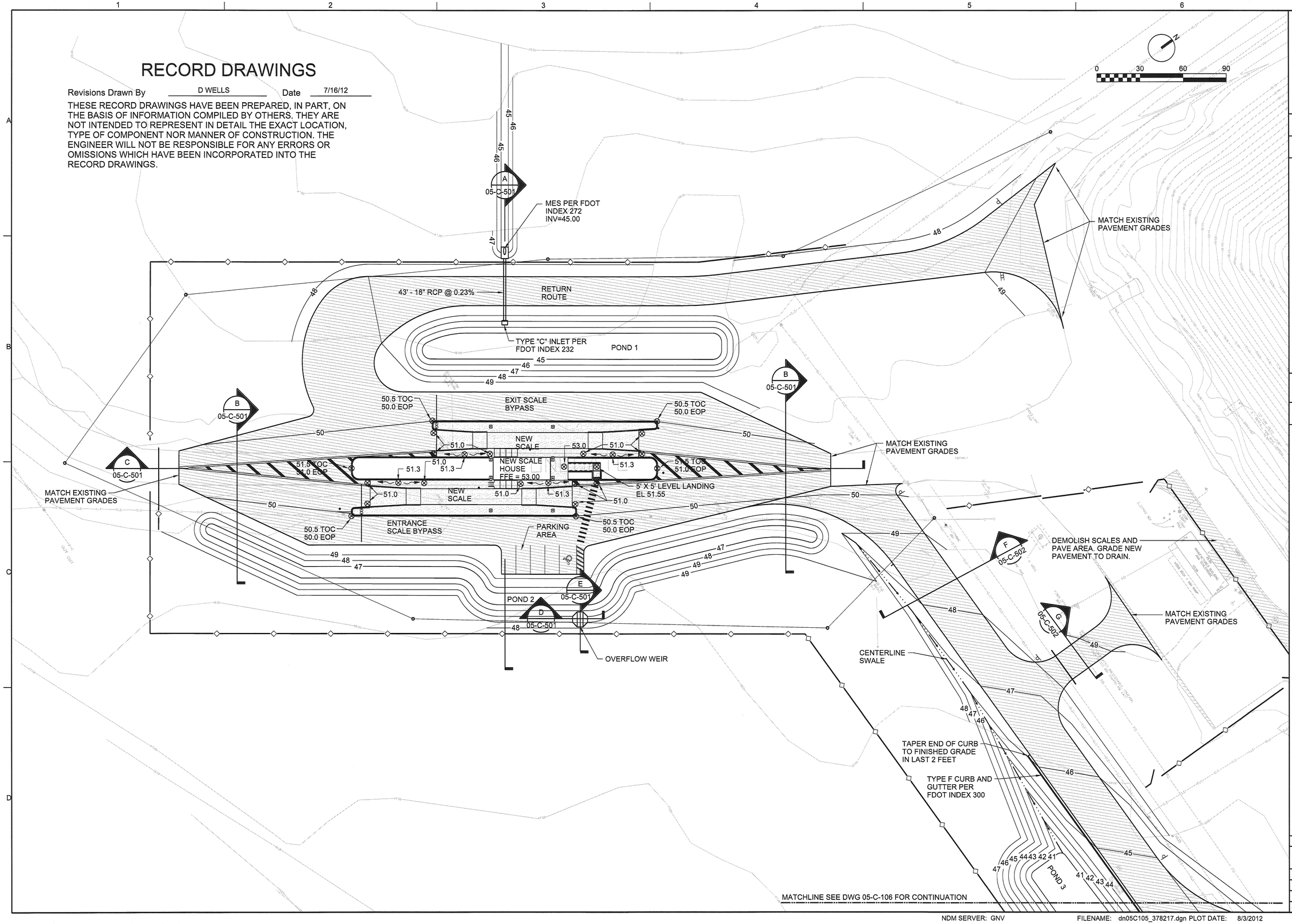

NO.	DATE	REVISION	BY	APVD

DSGN R MORRISON | DR R MORRISON | CHK C KOHLER | APVD R MORRISON

3011 SW WILLISTON RD
GAINESVILLE, FLORIDA 32608
EB0000072 AAC001992
Richard Thomas Morrison PE 67713

SOLID WASTE SYSTEM
UPGRADE DESIGN
PASCO COUNTY
PASCO COUNTY, FLORIDA

CH2MHILL

CIVIL
WEST PASCO SITE
GRADING, DRAINAGE, AND EROSION CONTROL PLAN

VERIFY SCALE
BAR IS ONE INCH ON ORIGINAL DRAWING.
0 1"

DATE	AUGUST 2012
PROJ	378217
DWG	05-C-105
SHEET	

REUSE OF DOCUMENTS: THIS DOCUMENT, AND THE IDEAS AND DESIGNS INCORPORATED HEREIN, AS AN INSTRUMENT OF PROFESSIONAL SERVICE, IS THE PROPERTY OF CH2M HILL AND IS NOT TO BE USED, IN WHOLE OR IN PART, FOR ANY OTHER PROJECT WITHOUT THE WRITTEN AUTHORIZATION OF CH2MHILL.
©CH2M HILL 2010. ALL RIGHTS RESERVED.

RECORD DRAWINGS FOR PERMIT

NDM SERVER: GNV FILENAME: dn05C105_378217.dgn PLOT DATE: 8/3/2012 PLOT TIME: 11:12:43 AM

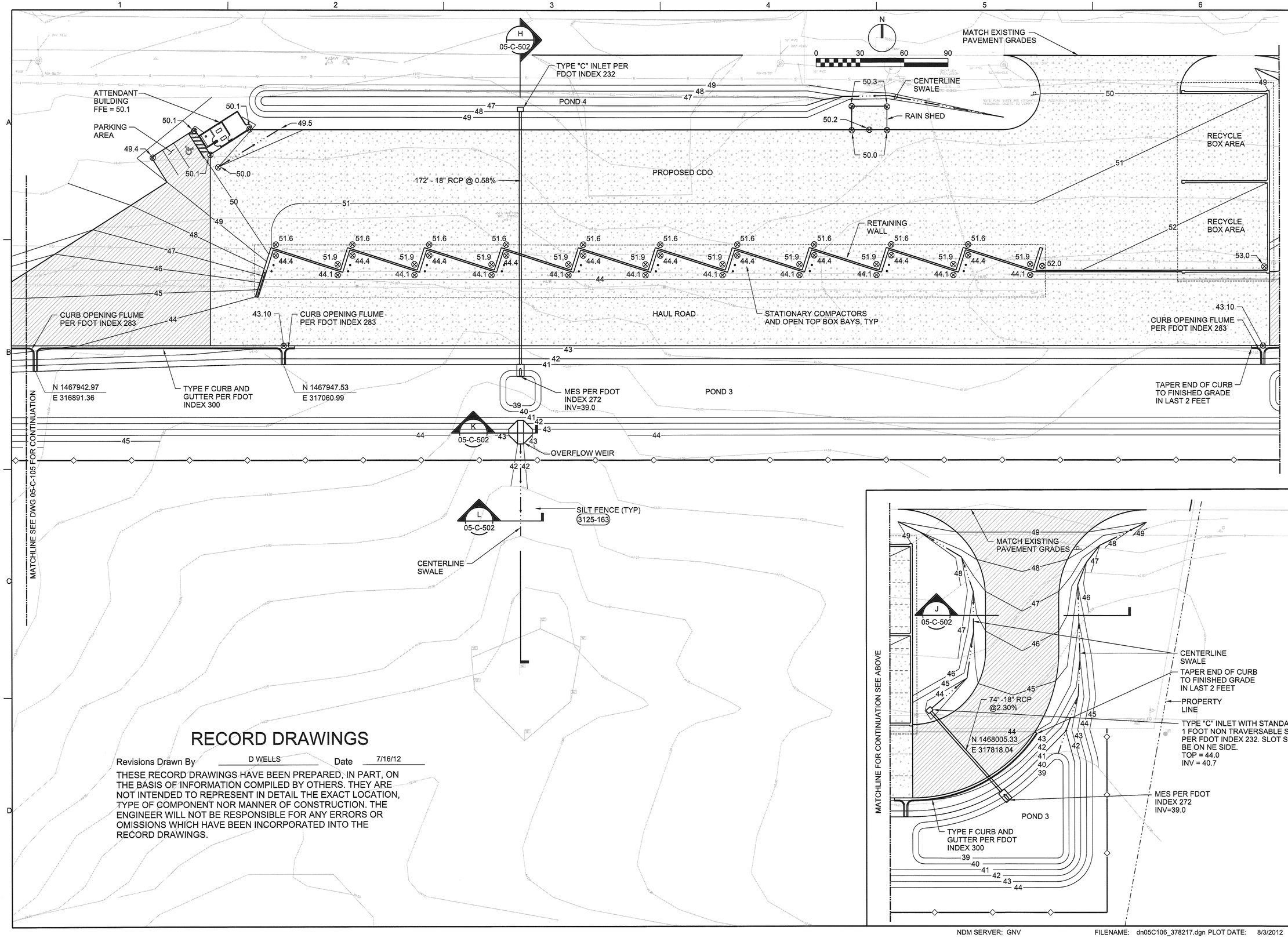

RECORD DRAWINGS

Revisions Drawn By D WELLS Date 7/16/12

THESE RECORD DRAWINGS HAVE BEEN PREPARED, IN PART, ON THE BASIS OF INFORMATION COMPILED BY OTHERS. THEY ARE NOT INTENDED TO REPRESENT IN DETAIL THE EXACT LOCATION, TYPE OF COMPONENT NOR MANNER OF CONSTRUCTION. THE ENGINEER WILL NOT BE RESPONSIBLE FOR ANY ERRORS OR OMISSIONS WHICH HAVE BEEN INCORPORATED INTO THE RECORD DRAWINGS.

REVISION

NO.	DATE	DSGN	DR	CHK	APVD	BY	APVD
		R MORRISON	R MORRISON	C KOHLER	R MORRISON		

©CH2M HILL 2010. ALL RIGHTS RESERVED.
REUSE OF DOCUMENTS: THIS DOCUMENT, AND THE IDEAS AND DESIGNS INCORPORATED HEREIN, AS AN INSTRUMENT OF PROFESSIONAL SERVICE, IS THE PROPERTY OF CH2M HILL AND IS NOT TO BE USED, IN WHOLE OR IN PART, FOR ANY OTHER PROJECT WITHOUT THE WRITTEN AUTHORIZATION OF CH2M HILL.

RECORD DRAWINGS FOR PERMIT

3011 SW WILLISTON RD
GAINESVILLE, FLORIDA 32608
EB0000072 AAC001992
Richard Thomas Morrison PE 67713

SOLID WASTE SYSTEM
UPGRADE DESIGN
PASCO COUNTY
PASCO COUNTY, FLORIDA

CH2MHILL

CIVIL
WEST PASCO SITE
GRADING, DRAINAGE, AND EROSION CONTROL PLAN

VERIFY SCALE
BAR IS ONE INCH ON ORIGINAL DRAWING.
0 1"

DATE	AUGUST 2012
PROJ	378217
DWG	05-C-106
SHEET	

NDM SERVER: GNV FILENAME: dn05C106_378217.dgn PLOT DATE: 8/3/2012 PLOT TIME: 11:13:09 AM

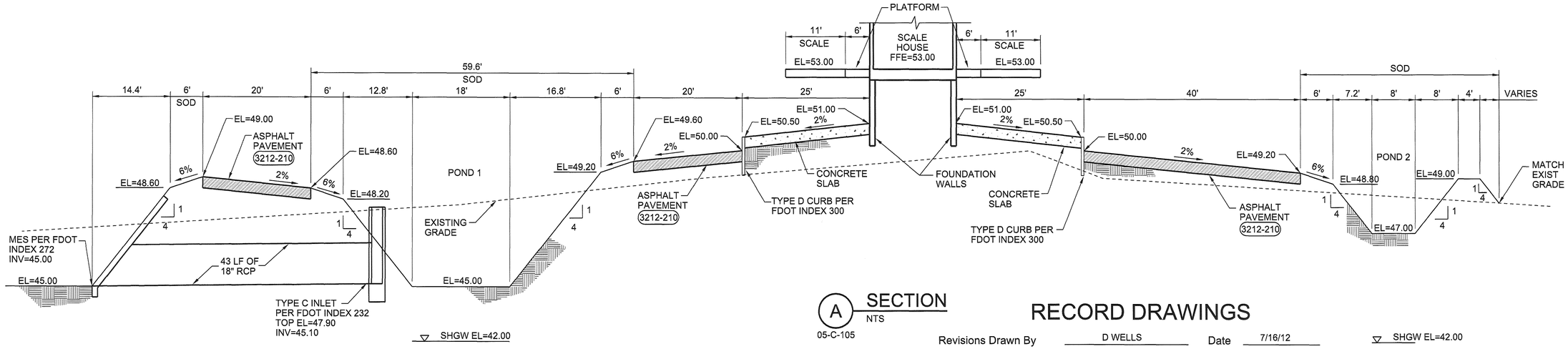

A SECTION
NTS
05-C-105

RECORD DRAWINGS

Revisions Drawn By D WELLS Date 7/16/12

THESE RECORD DRAWINGS HAVE BEEN PREPARED, IN PART, ON THE BASIS OF INFORMATION COMPILED BY OTHERS. THEY ARE NOT INTENDED TO REPRESENT IN DETAIL THE EXACT LOCATION, TYPE OF COMPONENT NOR MANNER OF CONSTRUCTION. THE ENGINEER WILL NOT BE RESPONSIBLE FOR ANY ERRORS OR OMISSIONS WHICH HAVE BEEN INCORPORATED INTO THE RECORD DRAWINGS.

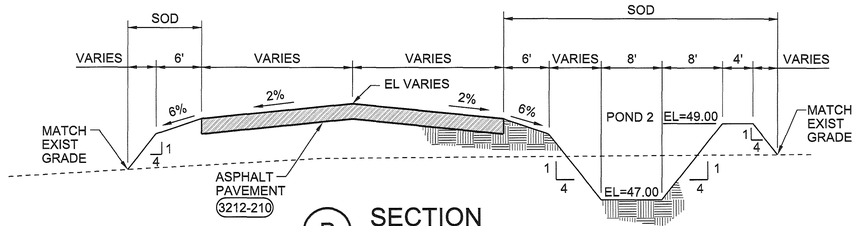

B SECTION
NTS
05-C-105

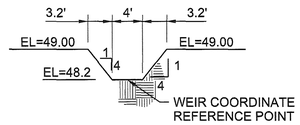

D SECTION
NTS
05-C-105

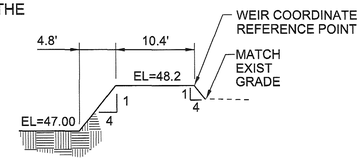

E SECTION
NTS
05-C-105

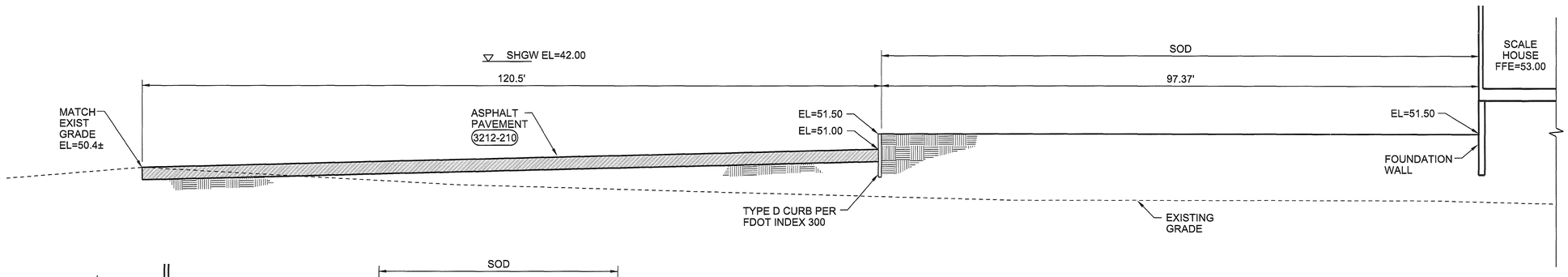

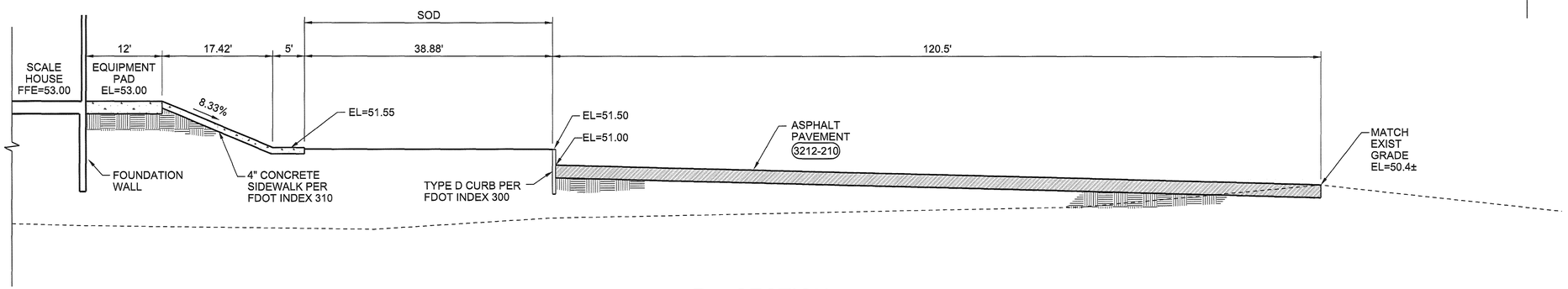

C SECTION
NTS
05-C-105

RICHARD THOMAS MORRISON PROFESSIONAL ENGINEER LICENSE No. 67713 STATE OF FLORIDA
©CH2M HILL 2010. ALL RIGHTS RESERVED.

NO.	DATE	DSGN	DR	CHK	REVISION	BY	APVD
			R MORRISON	C KOHLER	APVD	R MORRISON	

3011 SW WILLISTON RD.
GAINESVILLE, FLORIDA 32608
EB0000072 AAC001992
Richard Thomas Morrison PE 67713

SOLID WASTE SYSTEM
UPGRADE DESIGN
PASCO COUNTY
PASCO COUNTY, FLORIDA

CH2MHILL

CIVIL
WEST PASCO SITE
SECTIONS

REUSE OF DOCUMENTS: THIS DOCUMENT, AND THE IDEAS AND DESIGNS INCORPORATED HEREIN, AS AN INSTRUMENT OF PROFESSIONAL SERVICE, IS THE PROPERTY OF CH2M HILL AND IS NOT TO BE USED, IN WHOLE OR IN PART, FOR ANY OTHER PROJECT WITHOUT THE WRITTEN AUTHORIZATION OF CH2MHILL.

RECORD DRAWINGS FOR PERMIT

VERIFY SCALE

BAR IS ONE INCH ON ORIGINAL DRAWING.
0 1"

DATE	AUGUST 2012
PROJ	378217
DWG	05-C-501
SHEET	

NDM SERVER: GNV FILENAME: dn05C501_378217.dgn PLOT DATE: 8/3/2012 PLOT TIME: 11:13:16 AM

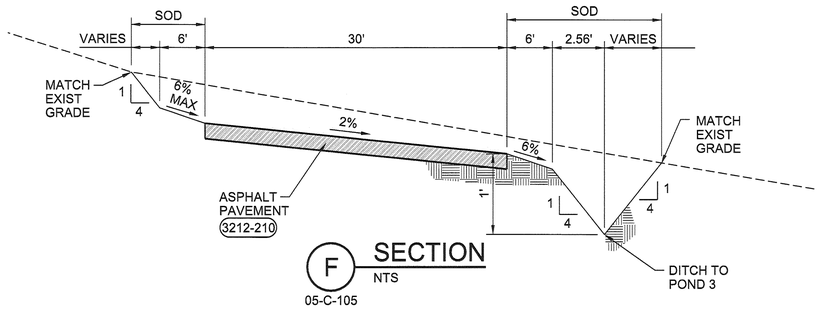

F SECTION
NTS
05-C-105

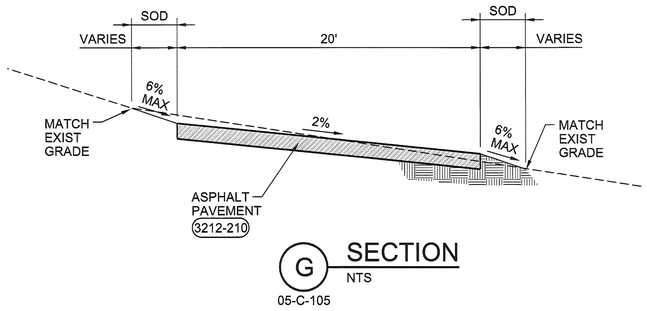

G SECTION
NTS
05-C-105

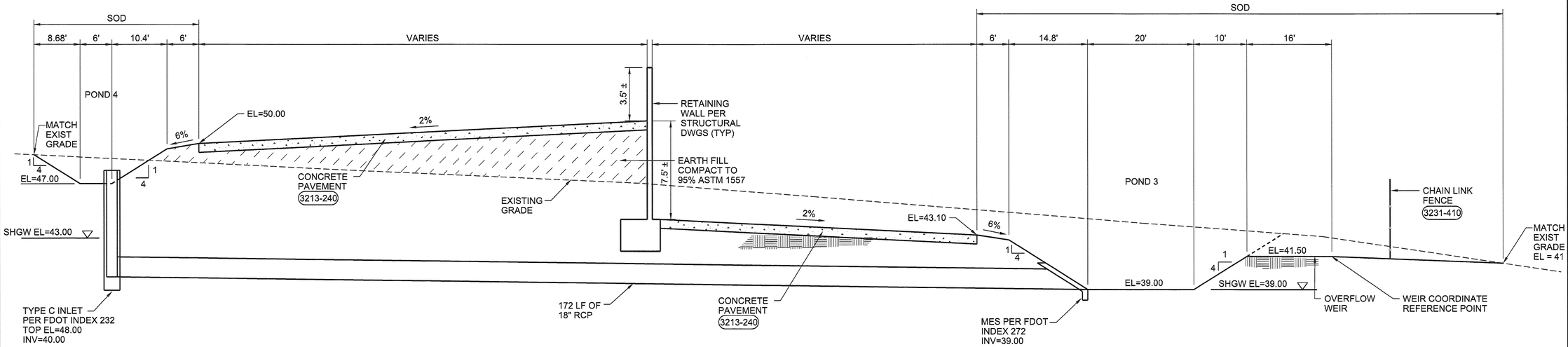

H SECTION
NTS
05-C-106

RECORD DRAWINGS

Revisions Drawn By D WELLS Date 7/16/12

THESE RECORD DRAWINGS HAVE BEEN PREPARED, IN PART, ON THE BASIS OF INFORMATION COMPILED BY OTHERS. THEY ARE NOT INTENDED TO REPRESENT IN DETAIL THE EXACT LOCATION, TYPE OF COMPONENT NOR MANNER OF CONSTRUCTION. THE ENGINEER WILL NOT BE RESPONSIBLE FOR ANY ERRORS OR OMISSIONS WHICH HAVE BEEN INCORPORATED INTO THE RECORD DRAWINGS.

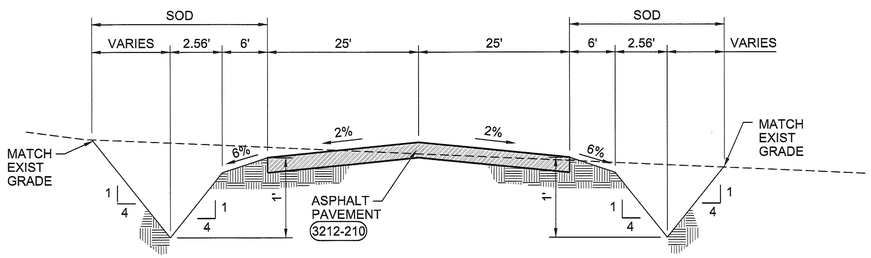

J SECTION
NTS
05-C-106

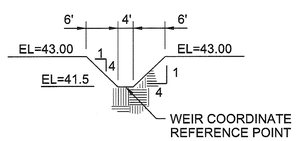

K SECTION
NTS
05-C-106

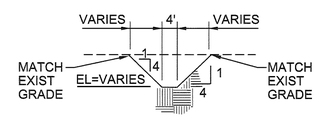

L SECTION
NTS
05-C-106

©CH2M HILL 2010. ALL RIGHTS RESERVED.
REUSE OF DOCUMENTS: THIS DOCUMENT, AND THE IDEAS AND DESIGNS INCORPORATED HEREIN, AS AN INSTRUMENT OF PROFESSIONAL SERVICE, IS THE PROPERTY OF CH2M HILL AND IS NOT TO BE USED, IN WHOLE OR IN PART, FOR ANY OTHER PROJECT WITHOUT THE WRITTEN AUTHORIZATION OF CH2MHILL.

RICHARD THOMAS MORRISON PROFESSIONAL ENGINEER
LICENSE No. 67713 STATE OF FLORIDA

NO.	DATE	DSGN	DR	CHK	APVD	BY	APVD
		R MORRISON	R MORRISON	C KOHLER			R MORRISON

REVISION

CH2MHILL
3011 SW WILLISTON RD
GAINESVILLE, FLORIDA 32608
EB0000072 AAC001992
Richard Thomas Morrison PE 67713

SOLID WASTE SYSTEM
UPGRADE DESIGN
PASCO COUNTY
PASCO COUNTY, FLORIDA

CIVIL
WEST PASCO SITE
SECTIONS

VERIFY SCALE
BAR IS ONE INCH ON ORIGINAL DRAWING.
0 1"

DATE	AUGUST 2012
PROJ	378217
DWG	05-C-502
SHEET	

RECORD DRAWINGS FOR PERMIT

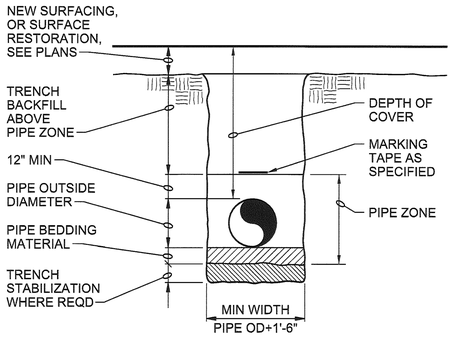

TYPICAL TRENCH

NTS

3123-110

RECORD DRAWINGS

Revisions Drawn By D WELLS Date 7/16/12

THESE RECORD DRAWINGS HAVE BEEN PREPARED, IN PART, ON THE BASIS OF INFORMATION COMPILED BY OTHERS. THEY ARE NOT INTENDED TO REPRESENT IN DETAIL THE EXACT LOCATION, TYPE OF COMPONENT NOR MANNER OF CONSTRUCTION. THE ENGINEER WILL NOT BE RESPONSIBLE FOR ANY ERRORS OR OMISSIONS WHICH HAVE BEEN INCORPORATED INTO THE RECORD DRAWINGS.

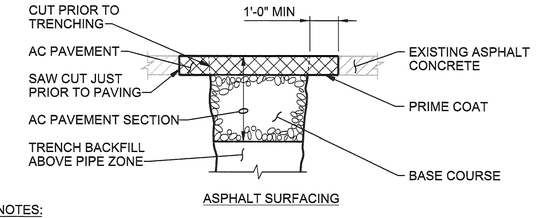

ASPHALT SURFACING

NOTES:

1. IF LOCATION OF TRENCH SAW CUT IS WITHIN 2 FEET OF AN EXISTING JOINT OR EDGE OF CONCRETE, REPLACE ENTIRE CONCRETE TO THE JOINT OR EDGE.
2. CONSTRUCT JOINTS ACROSS NEW CONCRETE TO MATCH EXISTING JOINT TYPES AND LOCATIONS.

SURFACE RESTORATION

NTS

3123-115

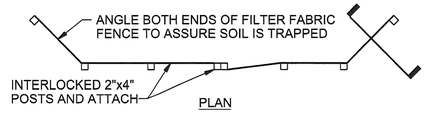

PLAN

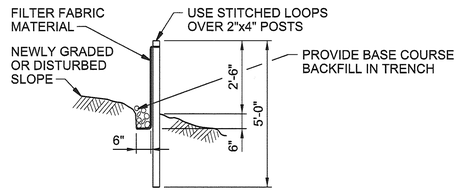

SECTION

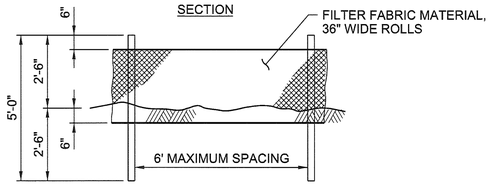

ELEVATION

NOTES:

1. SILT FENCE SHALL BE IN ACCORDANCE WITH FDOT INDEX 102, TYPE III SILT FENCE.
2. BURY BOTTOM OF FILTER FABRIC 6" VERTICALLY BELOW FINISHED GRADE AND COMPACT.
3. 2"x4" WOOD OR STEEL FENCE POSTS.
4. STITCHED LOOPS TO BE INSTALLED DOWNHILL SIDE OF SLOPE.

SILT FENCE

NTS

3125-163

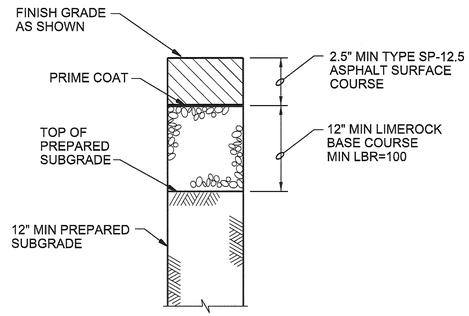

ASPHALT CONCRETE PAVEMENT

NTS

3212-210

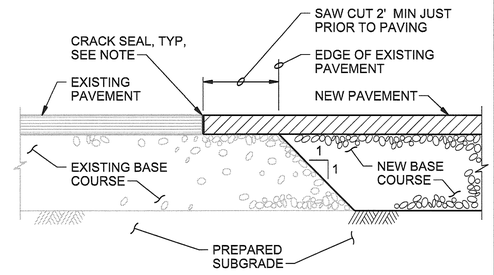

NOTE:

PAINT EDGE OF EXISTING ASPHALT WITH TACK COAT PRIOR TO ASPHALT PAVING. CRACK SEAL JOINT AFTER PAVING OPERATION HAS BEEN COMPLETED.

PAVEMENT CONNECTION

NTS

3212-215

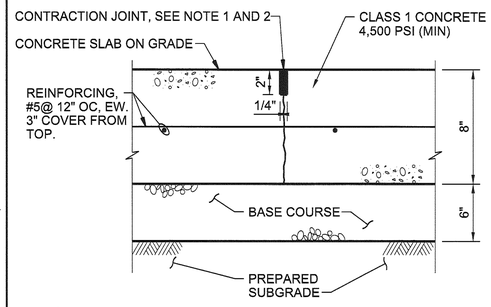

NOTES:

1. CONTRACTION JOINT SHALL BE MADE, CLEANED WITH COMPRESSED AIR, AND FILLED WITH SEALANT AS SPECIFIED.
2. CONCRETE JOINT SPACING: AS SHOWN OR MAXIMUM 15' X 15'.
3. INSTALL 1/2" PREMOLDED JOINT FILLER FULL DEPTH WHERE CONCRETE PAVEMENT ABUTS CONCRETE CURB, BUILDING OR ANY RIGID STRUCTURE.
4. PROVIDE A 12" THICK BY 18" WIDE THICKENED EDGE AROUND PERIMETER OF SLAB. TRANSITION THICKENED EDGE TO NORMAL 8" THICKNESS IN 18".

CONCRETE PAVEMENT

NTS

3213-240

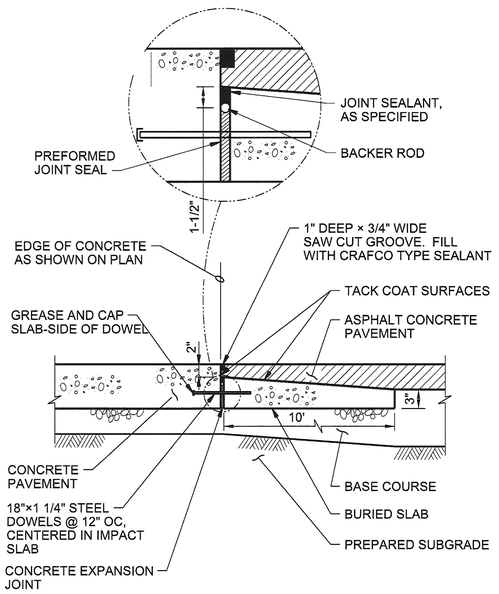

CONCRETE TO ASPHALT TRANSITION

NTS

3213-250

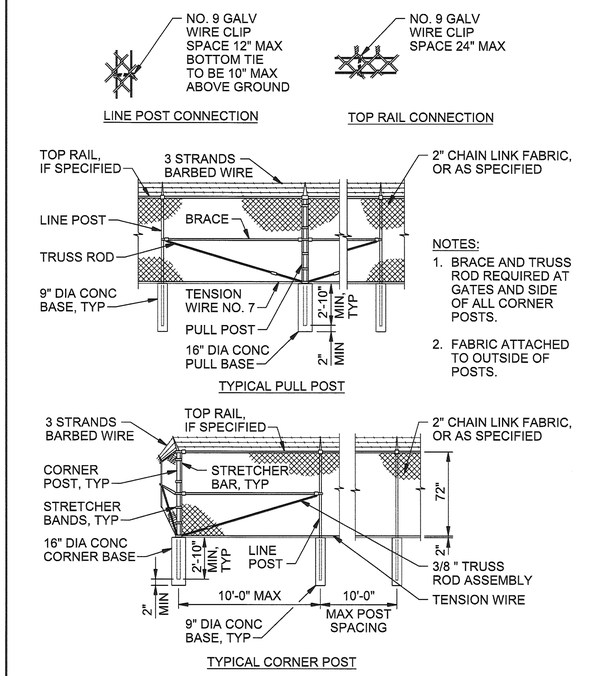

CHAIN LINK FENCE

NTS

3231-410

3011 SW WILLISTON RD
GAINESVILLE, FLORIDA 32608
EB0000072 AAC001992
Richard Thomas Morrison PE 67713

SOLID WASTE SYSTEM
UPGRADE DESIGN
PASCO COUNTY
PASCO COUNTY, FLORIDA

CH2MHILL

CIVIL
WEST PASCO SITE
DETAILS

NO.	DSGN	DATE	DR	CHK	APVD	BY	REVISION	APVD

R MORRISON R MORRISON R MORRISON C KOHLER R MORRISON

VERIFY SCALE

BAR IS ONE INCH ON ORIGINAL DRAWING. 0 1"

DATE	AUGUST 2012
PROJ	378217
DWG	05-C-503
SHEET	

REUSE OF DOCUMENTS: THIS DOCUMENT, AND THE IDEAS AND DESIGNS INCORPORATED HEREIN, AS AN INSTRUMENT OF PROFESSIONAL SERVICE, IS THE PROPERTY OF CH2M HILL AND IS NOT TO BE USED, IN WHOLE OR IN PART, FOR ANY OTHER PROJECT WITHOUT THE WRITTEN AUTHORIZATION OF CH2MHILL.

© CH2M HILL 2010. ALL RIGHTS RESERVED.

RECORD DRAWINGS FOR PERMIT

RECORD DRAWINGS

Revisions Drawn By D WELLS Date 7/16/12

THESE RECORD DRAWINGS HAVE BEEN PREPARED, IN PART, ON THE BASIS OF INFORMATION COMPILED BY OTHERS. THEY ARE NOT INTENDED TO REPRESENT IN DETAIL THE EXACT LOCATION, TYPE OF COMPONENT NOR MANNER OF CONSTRUCTION. THE ENGINEER WILL NOT BE RESPONSIBLE FOR ANY ERRORS OR OMISSIONS WHICH HAVE BEEN INCORPORATED INTO THE RECORD DRAWINGS.

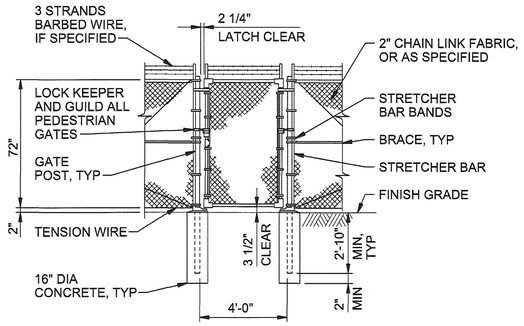

PEDESTRIAN GATE

NTS

3231-420

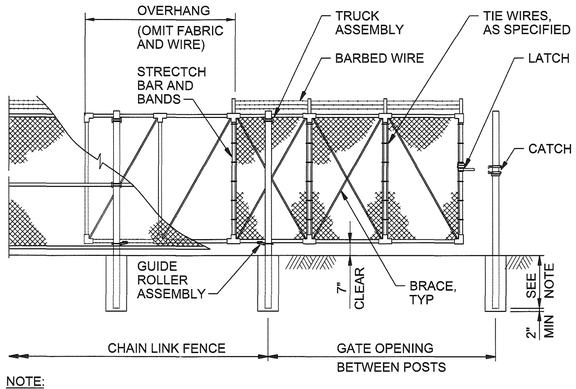

NOTE:

POST SETS PER MANUFACTURER'S RECOMMENDATIONS FOR GATE OPENING AND GATE POST SIZES.

CANTILEVER SLIDE GATE

NTS

3231-425

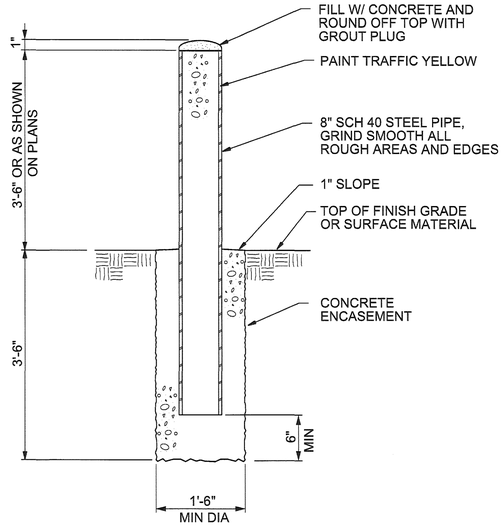

PERMANENT GUARD POST

NTS

3305-954

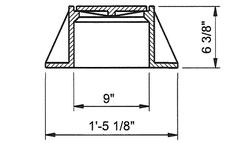

CLEANOUT FRAME AND COVER

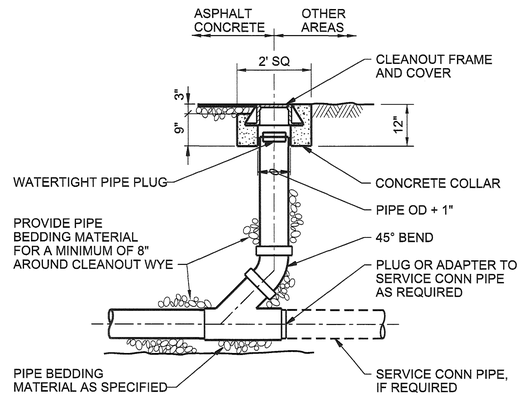

CLEANOUT

EXTERIOR CLEANOUT

NTS

3305-740

RICHARD THOMAS MORRISON ★ ENGINEER ★ LICENSE No 67713 STATE OF FLORIDA ★ PROFESSIONAL ENGINEER

NO.	DATE	DR	CHK	APVD	BY	APVD
DSGN	R MORRISON	R MORRISON	C KOHLER	R MORRISON		

REVISION

©CH2M HILL 2010. ALL RIGHTS RESERVED.

REUSE OF DOCUMENTS: THIS DOCUMENT, AND THE IDEAS AND DESIGNS INCORPORATED HEREIN, AS AN INSTRUMENT OF PROFESSIONAL SERVICE, IS THE PROPERTY OF CH2M HILL AND IS NOT TO BE USED, IN WHOLE OR IN PART, FOR ANY OTHER PROJECT WITHOUT THE WRITTEN AUTHORIZATION OF CH2MHILL

RECORD DRAWINGS FOR PERMIT

3011 SW WILLISTON RD
GAINESVILLE, FLORIDA 32608
EB0000072 AAC001992
Richard Thomas Morrison PE 67713

CH2MHILL

SOLID WASTE SYSTEM
UPGRADE DESIGN
PASCO COUNTY
PASCO COUNTY, FLORIDA

CIVIL
WEST PASCO SITE
DETAILS

VERIFY SCALE

BAR IS ONE INCH ON ORIGINAL DRAWING.
0 1"

DATE	AUGUST 2012
PROJ	378217
DWG	05-C-504
SHEET	

GENERAL NOTES:

1. CONTRACTOR IS RESPONSIBLE FOR ALL FEES CHARGED BY WITHLACOOCHEE RIVER ELECTRIC COOPERATIVE, INC. (WREC) FOR PROVISION OF ALL NEW ELECTRICAL SERVICES.
2. COORDINATE WITH WREC (CONTACT MARC COULSTRING, 727-868-9465, EXT-2137) PRIOR TO CONSTRUCTION. ALL ELECTRICAL WORK FOR NEW SERVICE MUST SATISFY WREC REQUIREMENTS.
3. CONTRACTOR TO PROVIDE AND INSTALL UTILITY TRANSFORMER CONCRETE PAD PER WREC SPECIFICATIONS.
4. CONTRACTOR TO CLEAR AND STAKE ROUTE OF EXISTING UNDERGROUND UTILITIES TO FACILITATE INSTALLATION OF SERVICE PRIMARY CONDUIT. PRIMARY CONDUIT ROUTE MUST BE REDUCED TO FINAL GRADE IN ORDER FOR WREC TO PERFORM THIS INSTALLATION.
5. FIELD LOCATE EXISTING FIBER OPTIC PATCH PANEL INSTALLED AT EXISTING CLASS III SCALEHOUSE. FIELD ROUTE 2" CONDUIT WITH FIBER OPTIC CABLE FROM EXISTING FIBER OPTIC HANDHOLE UNDER EXISTING CLASS III SCALEHOUSE (MANUFACTURED BUILDING) AND UP TO EXISTING FIBER OPTIC PATCH PANEL.
6. LOCATE AND FLAG CONFLICTING UNDERGROUND FACILITIES ALONG PRIMARY SERVICE CONDUIT ROUTE.
7. CONTRACTOR TO RESTORE GRADE TO ORIGINAL FINISH UPON COMPLETION OF WORK. REPLACE SOD OR SEED THAT IS DAMAGED DURING INSTALLATION OF EQUIPMENT.
8. WREC TO PROVIDE AND INSTALL PRIMARY CONDUIT, PRIMARY CONDUCTORS, UTILITY TRANSFORMER, AND METERING EQUIPMENT.
9. CONTRACTOR TO PROVIDE AND INSTALL SECONDARY WIRING AND CONDUIT. WREC TO CONNECT SERVICE CONDUCTORS TO TRANSFORMER SECONDARY. CONTRACTOR TO INSTALL METERING EQUIPMENT PROVIDED BY WREC.
10. INSTALL PULL BOXES IN CONDUIT RUNS EVERY 200 FEET OR THE EQUIVALENT OF THREE RIGHT-ANGLE BENDS. USE PRECAST CONCRETE HS-20 TRAFFIC RATED PULL BOXES.
11. SEPARATE UTILITY SERVICE FEED IS PROVIDED FOR EXISTING WET WELL. ALL WORK, INCLUDING, BUT NOT LIMITED TO DISCONNECTION FROM ELECTRICAL SERVICE, PUMP REPLACEMENT, AND RECONNCECTION TO ELECTRICAL SERVICE, SHALL BE PERFORMED BY THE WELL CONTRACTOR. REFER TO PLUMBING SECTION FOR MORE INFORMATION. ALL OTHER ELECTRICAL EQUIPMENT IS POWERED FROM 10-LP-1.
12. REFER TO SHEET 10-E-401 FOR GENERATOR AND UTILITY TRANSFORMER CONCRETE PAD DIMENSIONS.
13. REFER TO SHEET 05-C-102 AND SPECIFICATION SECTION 32 31 13, CHAIN LINK FENCES AND GATES, FOR ADDITIONAL REQUIREMENTS.
14. REFER TO SHEET 10-E-601 FOR SCALEHOUSE POWER RISER DIAGRAM.
15. TELEPHONE SERVICE PROVISION TO BE HANDLED BY OWNER. CONTRACTOR TO INSTALL DEVICE BOXES AND ASSOCIATED CONDUIT AS SHOWN ON DRAWINGS.
16. CONTRACTOR TO FIELD VERIFY LOCATION OF THE TELPHONE DEMARCATION POINT. CONTRACTOR SHALL BE RESPONSIBLE FOR ANY EXTRA MATERIAL AND LABOR COSTS INVOLVED IN THE INSTALLATION OF TELEPHONE SERVICE RACEWAY IF THE DEMACRATION POINT IS LOCATED ELSEWHERE. SUBMIT TO THE ENGINEER, PLANS OF NEW RACEWAY ROUTING, FOR APPROVAL PRIOR TO INSTALLATION.
17. COORDINATE WITH WREC TO RELOCATE THE OVERHEAD UTILITY LINES AND POLES FOR THE INSTALLATION OF THE NEW SCALE HOUSE.
18. ALL CONDUITS INSTALLED UNDER ROADS, OR OTHER TRAFFIC AREAS, SHALL BE CONCRETE ENCASED PER DETAILS (2605-400b/c). THE CONCRETE ENCASEMENT SHALL EXTEND 10 FEET PAST THE ROAD OR TRAFFIC AREA.
19. ROUTE #4/0 BARE STRANDED TIN-PLATED COPPER GROUND WIRE WITH ALL DUCT BANKS AND CONNECT TO HANDHOLE GROUND RODS.
20. REFER TO DRAWING 05-C-102 AND SPECIFICATION SECTION 32 31 13, CHAIN LINK FENCES AND GATES FOR ADDITIONAL REQUIREMENTS. ASSOCIATED RISER DIAGRAM ON DRAWING 10-E-602 SHOWS EXTRA CONNECTION POINTS NOT SHOWN ON THIS DRAWING. ASSUME 30 FOOT CIRCUIT LENGTHS FOR THESE CONNECTIONS.

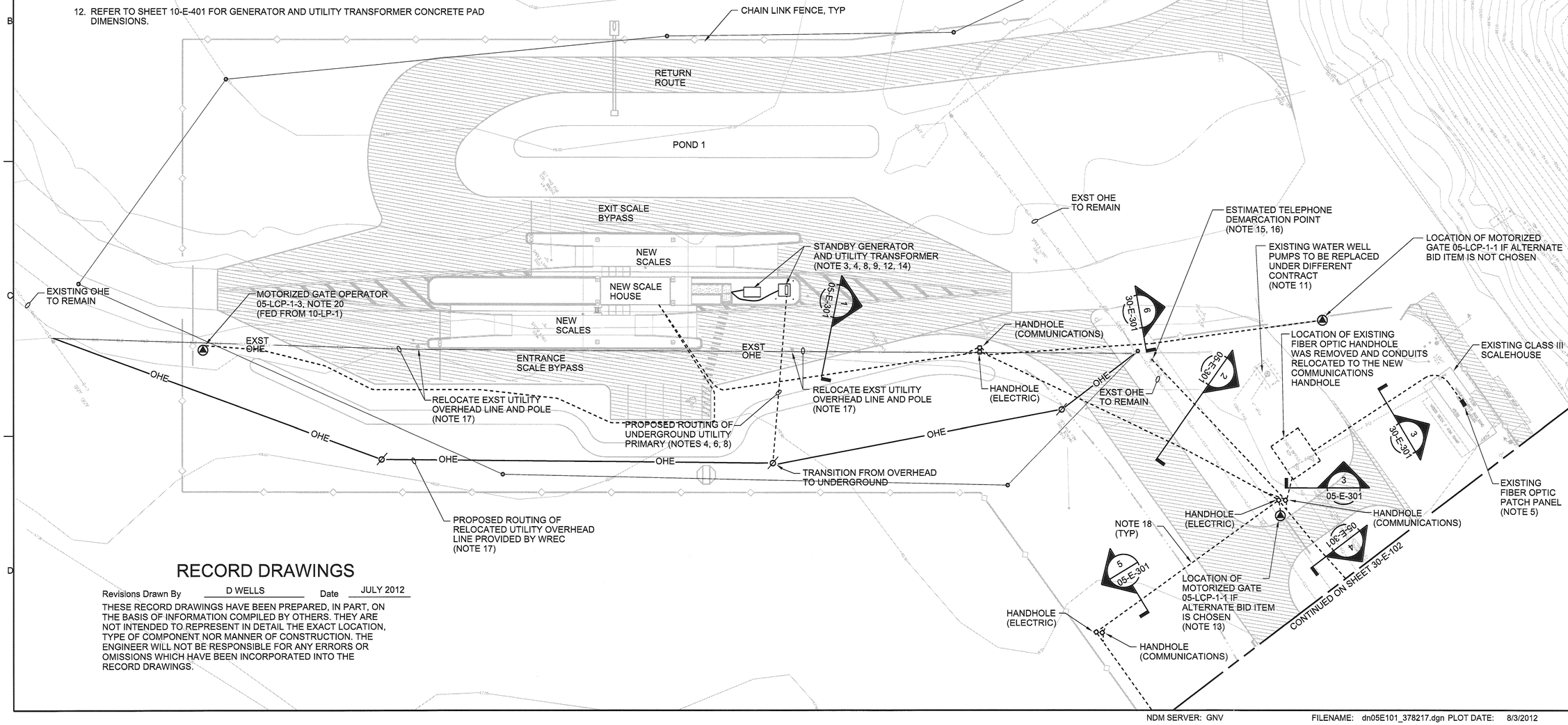

RECORD DRAWINGS

Revisions Drawn By D WELLS Date JULY 2012

THESE RECORD DRAWINGS HAVE BEEN PREPARED, IN PART, ON THE BASIS OF INFORMATION COMPILED BY OTHERS. THEY ARE NOT INTENDED TO REPRESENT IN DETAIL THE EXACT LOCATION, TYPE OF COMPONENT NOR MANNER OF CONSTRUCTION. THE ENGINEER WILL NOT BE RESPONSIBLE FOR ANY ERRORS OR OMISSIONS WHICH HAVE BEEN INCORPORATED INTO THE RECORD DRAWINGS.

DAVID C. NICHOLSON PROFESSIONAL ENGINEER LICENSE No. 69201 STATE OF FLORIDA

NO.	DATE	DSGN	DR	CHK	BY	APVD
REVISION		J LEWIS	A CLOUGH	M GOSLOW	D NICHOLSON	APVD

©CH2M HILL 2010. ALL RIGHTS RESERVED.

3011 SW WILLISTON RD
GAINESVILLE, FLORIDA 32608
EB0000072 AAC001992
DAVID C NICHOLSON PE 60201

SOLID WASTE SYSTEM
UPGRADE DESIGN
PASCO COUNTY
PASCO COUNTY, FLORIDA

CH2MHILL

ELECTRICAL
WEST PASCO SITE
OVERALL ELECTRICAL SITE PLAN

REUSE OF DOCUMENTS: THIS DOCUMENT, AND THE IDEAS AND DESIGNS INCORPORATED HEREIN, AS AN INSTRUMENT OF PROFESSIONAL SERVICE, IS THE PROPERTY OF CH2M HILL AND IS NOT TO BE USED, IN WHOLE OR IN PART, FOR ANY OTHER PROJECT WITHOUT THE WRITTEN AUTHORIZATION OF CH2MHILL

RECORD DRAWINGS FOR PERMIT

VERIFY SCALE
BAR IS ONE INCH ON ORIGINAL DRAWING. 0 1"

DATE	AUGUST 2012
PROJ	378217
DWG	05-E-101
SHEET	

NDM SERVER: GNV FILENAME: dn05E101_378217.dgn PLOT DATE: 8/3/2012 PLOT TIME: 11:13:34 AM

RECORD DRAWINGS

Revisions Drawn By D WELLS Date 7/16/12

THESE RECORD DRAWINGS HAVE BEEN PREPARED, IN PART, ON THE BASIS OF INFORMATION COMPILED BY OTHERS. THEY ARE NOT INTENDED TO REPRESENT IN DETAIL THE EXACT LOCATION, TYPE OF COMPONENT NOR MANNER OF CONSTRUCTION. THE ENGINEER WILL NOT BE RESPONSIBLE FOR ANY ERRORS OR OMISSIONS WHICH HAVE BEEN INCORPORATED INTO THE RECORD DRAWINGS.

4 32 1
33 17 2 3

1 DUCT BANK SECTION
NTS

INCLUDE IN BASE BID. THIS CONDUIT SHALL BE INSTALLED IN DB SECTION 2 IF ALTERNATE BID ITEM IS CHOSEN.

CE1 1

6 DUCT BANK SECTION
NTS

ALTERNATE BID ITEM. THIS CONDUIT SHALL BE INSTALLED IN DB SECTION 6 IF ALTERNATE BID ITEM IS NOT CHOSEN.

CE1
CE1 4 CE1 1
16 17 2 3

2 DUCT BANK SECTION
NTS

6

3 DUCT BANK SECTION
NTS

CE1 CE1
18 8A 2

4 DUCT BANK SECTION
NTS

11 CE1 3

5 DUCT BANK SECTION
NTS

THIS CIRCUIT SCHEDULE IS ALSO SHOWN ON DRAWING 30-E-301

DUCTBANK CIRCUIT SCHEDULE (WEST PASCO)

CKT. NO.	TO (DESTINATION)	FROM (SOURCE)	CONDUIT TRADE SIZE	CONDUCTORS	REMARKS
1	05-LCP-1-1 MOTORIZED CANTILEVER SLIDE GATE	10-LP-1	1"	208V POWER	
2	05-FP-2,(3),(4) FIELD CAMERA PANELS	10-LP-1	1"	120V POWER	
3	05-FP-5,(6),(7) FIELD CAMERA PANELS	10-LP-1	1"	120V POWER	
4	05-FP-3, 05-FP-5 FIELD CAMERA PANELS, CLASS III SCALEHOUSE	10-CP-1	4"	FIBER OPTIC CABLE	NOTES 1, 2
5	05-FP-3, 05-FP-5 FIELD CAMERA PANELS	10-CP-1	4"	FIBER OPTIC CABLE	NOTES 1, 2
6	CLASS III SCALEHOUSE NETWORK EQT.	10-CP-1, 05-FP-7	2"	FIBER OPTIC CABLE	NOTES 1, 2
7	05-FP-2,(4) FIELD CAMERA PANELS	10-LP-1	1"	120V POWER	
8	05-FP-4 FIELD CAMERA PANEL	05-FP-3	4"	FIBER OPTIC CABLE	NOTES 1, 2
8A	05-FP-3 FIELD CAMERA PANEL	10-CP-1	4"	FIBER OPTIC CABLE	NOTES 1, 2
9	05-FP-2 FIELD CAMERA PANEL	10-CP-1	1"	120V POWER	
10	05-FP-2 FIELD CAMERA PANEL	05-FP-4	4"	FIBER OPTIC CABLE	NOTES 1, 2
11	05-FP-5, 05-FP-7 FIELD CAMERA PANELS	10-CP-1, CLASS III SCALEHOUSE	4"	FIBER OPTIC CABLE	NOTES 1, 2
12	05-FP-6, 05-FP-7 FIELD CAMERA PANELS	10-LP-1	1"	120V POWER	
13	05-FP-6, 05-FP-7 FIELD CAMERA PANELS	05-FP-5, CLASS III SCALEHOUSE	4"	FIBER OPTIC CABLE	NOTES 1, 2
14	05-FP-7 FIELD CAMERA PANEL	10-CP-1	1"	120V POWER	
15	05-FP-7 FIELD CAMERA PANEL	05-FP-6, CLASS III SCALEHOUSE	4"	FIBER OPTIC CABLE	NOTES 1, 2
16	10-CP-1 NETWORK RACK, ATTENDANT BUILDING	TELCO DEMARC	2"	EMPTY	NOTE 4
17	10-CP-1 NETWORK RACK	TELCO DEMARC	2	EMPTY	NOTE 4
18	ATTENDANT BUILDING	TELCO DEMARC	2"	EMPTY	NOTE 4
19			-		
20	30-DS-1 COMPACTOR #1	30-PP-1	1.5"	480V POWER	
21	30-DS-2 COMPACTOR #2	30-PP-1	1.5"	480V POWER	
22	30-DS-3 COMPACTOR #3	30-PP-1	1.5"	480V POWER	
23	30-DS-4 COMPACTOR #4	30-PP-1	1.5"	480V POWER	
24	30-DS-5 COMPACTOR #5	30-PP-1	1.5"	480V POWER	
25	30-DS-6 COMPACTOR #6	30-PP-1	1.5"	480V POWER	
26	30-DS-7 COMPACTOR #7	30-PP-1	1.5"	480V POWER	
27	30-DS-8 COMPACTOR #8	30-PP-1	1.5"	480V POWER	
28	30-DS-9 COMPACTOR #9	30-PP-1	1.5"	480V POWER	
29	30-DS-10 COMPACTOR #10	30-PP-1	1.5"	480V POWER	
30	CANOPY #1 LIGHTS	30-PP-1	1"	277V POWER	
31	CANOPY #2 LIGHTS	30-PP-1	1"	277V POWER	
32	HANDHOLE (POWER)	10-LP-1	1.5"	EMPTY	
33	HANDHOLE (COMMUNICATIONS)	10-CP-1	1.5"	EMPTY	
34	05-LCP-1-2 MOTORIZED SLIDE GATE	30-LP-1	1"	208V POWER	
35	HANDHOLE (POWER)	30-LP-1	1.5"	EMPTY	
36	HANDHOLE (POWER)	30-PP-1	1.5"	EMPTY	
37	EXST CLASS I SCALEHOUSE PULLBOX	05-FP-6	4"	FIBER OPTIC CABLE	NOTE 1
CE1	N/A	N/A	1.5"	EMPTY	NOTE 6

NOTES:
1. INSTALL ALL 4" FIBER OPTIC RACEWAYS WITH 3 CHANNEL INNERDUCT
2. RUN EACH CABLE IN SEPARATE INNERUCT
3. NOT USED
4. COUNTY TO PROVIDE AND INSTALL TELEPHONE WIRE
5. SEE DWG 90-D-105 FOR CLASS III NETWORK EQT.
6. INSTALL EMPTY CONDUIT FOR POWER BETWEEN HANDHOLES OR BETWEEN CAMERA FIELD PANELS

DAVID C. NICHOLSON LICENSE No. 60201 STATE OF FLORIDA PROFESSIONAL ENGINEER

NO.	DATE	DSGN	DR	CHK	APVD	BY	APVD
		J LEWIS	N ADAMS	M GOSLOW	D NICHOLSON		

REVISION

©CH2M HILL 2010. ALL RIGHTS RESERVED.
REUSE OF DOCUMENTS: THIS DOCUMENT, AND THE IDEAS AND DESIGNS INCORPORATED HEREIN, AS AN INSTRUMENT OF PROFESSIONAL SERVICE, IS THE PROPERTY OF CH2M HILL AND IS NOT TO BE USED, IN WHOLE OR IN PART, FOR ANY OTHER PROJECT WITHOUT THE WRITTEN AUTHORIZATION OF CH2MHILL.

3011 SW WILLISTON RD
GAINESVILLE, FLORIDA 32608
EB0000072 AAC001992
DAVID C NICHOLSON PE 60201

SOLID WASTE SYSTEM
UPGRADE DESIGN
PASCO COUNTY
PASCO COUNTY, FLORIDA

CH2MHILL

ELECTRICAL
WEST PASCO SITE
DUCTBANK SECTIONS

RECORD DRAWINGS FOR PERMIT

VERIFY SCALE
BAR IS ONE INCH ON ORIGINAL DRAWING. 0 1"

DATE	AUGUST 2012
PROJ	378217
DWG	05-E-301
SHEET	

NDM SERVER: GNV FILENAME: dn05E301_378217.dgn PLOT DATE: 8/3/2012 PLOT TIME: 11:13:40 AM

RECORD DRAWINGS

Revisions Drawn By D WELLS Date 7/16/12

THESE RECORD DRAWINGS HAVE BEEN PREPARED, IN PART, ON THE BASIS OF INFORMATION COMPILED BY OTHERS. THEY ARE NOT INTENDED TO REPRESENT IN DETAIL THE EXACT LOCATION, TYPE OF COMPONENT NOR MANNER OF CONSTRUCTION. THE ENGINEER WILL NOT BE RESPONSIBLE FOR ANY ERRORS OR OMISSIONS WHICH HAVE BEEN INCORPORATED INTO THE RECORD DRAWINGS.

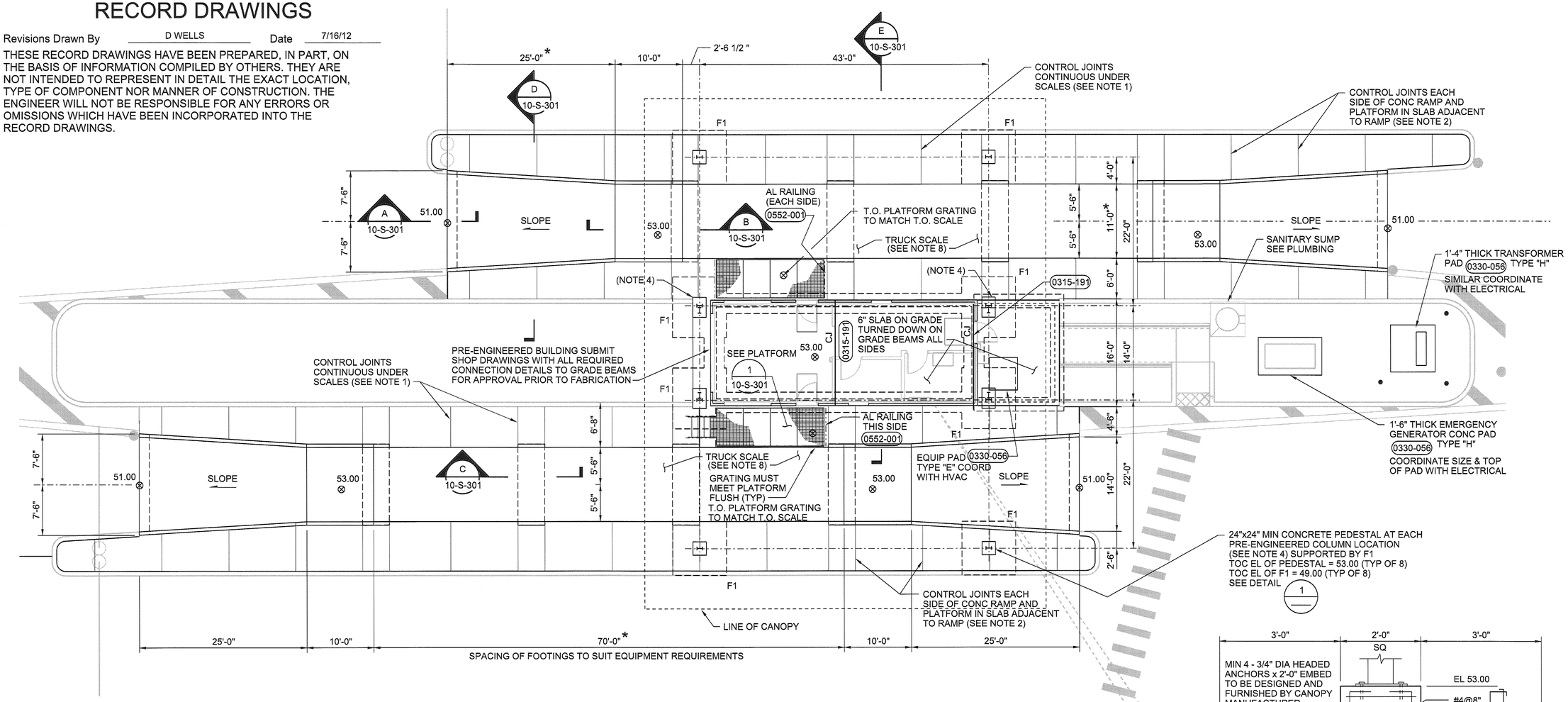

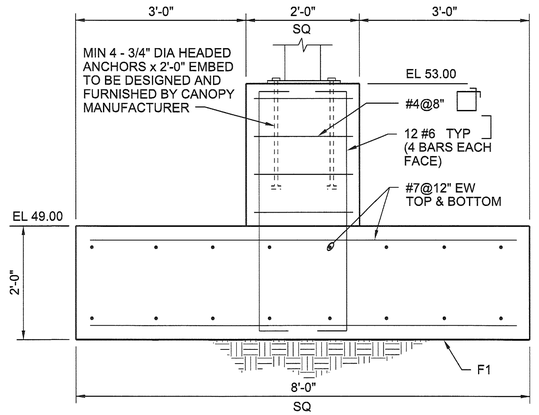

1 DETAIL
3/4"=1'-0"

NOTES:

1. PROVIDE CONTROL JOINTS IN SLAB ON GRADE AT 15'-0" CENTERED EACH DIRECTION PER 0315-191 OR 0315-192 AT CONTRACTORS OPTION. SUBMIT JOINT LAYOUT FOR REVIEW PRIOR TO CONSTRUCTION
2. PROVIDE CONTROL JOINTS IN SLAB ON GRADE AT 10'-0" MAX SPACING PER 0315-191 OR 0315-192 AT CONTRACTORS OPTION.
3. SEE CIVIL FOR ELEVATIONS AND SLOPES OF 4" THICK WASHOUT SLAB.
4. AT PORTAL FRAME LOCATIONS COORDINATE PEDESTAL SIZE AND REQUIREMENT WITH PRE-ENGINEERED CANOPY SHOP DRAWINGS AND MODIFY AS REQUIRED WITH ADDITIONAL 2-#6 VERTICAL BARS FOR EVERY 6" INCREASE IN LENGTH.
5. VAPOR RETARDER TO BE INSTALLED BELOW BUILDING CONCRETE SLAB. SEE SECTION E, 10-S-301.
6. STAIR FROM SCALEHOUSE TO HAVE MAXIMUM 7" RISER AND 11" MINIMUM TREAD.
7. COAT ALL ALUMINUM IN CONTACT WITH GALV. STEEL WITH BITUMINOUS COATING AS SPECIFIED.
8. TRUCK SCALE PER SPECIFICATION SECTION 10880.

CANOPY AND SITE FOUNDATION PLAN

1/8"=1'-0"

0 8 16 24

NO.	DATE	DSGN	DR	CHK	APVD	BY	REVISION
		M THUE	J PRUITT	M CHRZANOWSKI	M THUE		

MONRAD R THUE LICENSE NO 32071 STATE OF FLORIDA PROFESSIONAL ENGINEER

© CH2M HILL 2010. ALL RIGHTS RESERVED.

3011 SW WILLISTON RD
GAINESVILLE, FLORIDA 32608
EB0000072 AAC001992

CH2MHILL
Henry L Postrozny PE 33223 (Mechanical) MONRAD R THUE PE 32071 (Structural)

SOLID WASTE SYSTEM
UPGRADE DESIGN
PASCO COUNTY
PASCO COUNTY, FLORIDA

STRUCTURAL
WEST PASCO SITE
SCALEHOUSE
CANOPY AND SITE FOUNDATION

REUSE OF DOCUMENTS: THIS DOCUMENT, AND THE IDEAS AND DESIGNS INCORPORATED HEREIN, AS AN INSTRUMENT OF PROFESSIONAL SERVICE, IS THE PROPERTY OF CH2M HILL AND IS NOT TO BE USED, IN WHOLE OR IN PART, FOR ANY OTHER PROJECT WITHOUT THE WRITTEN AUTHORIZATION OF CH2MHILL.

RECORD DRAWINGS FOR PERMIT

VERIFY SCALE
BAR IS ONE INCH ON ORIGINAL DRAWING.
0 1"

DATE	AUGUST 2012
PROJ	378217
DWG	10-S-101
SHEET	

RECORD DRAWINGS

Revisions Drawn By D WELLS Date JULY 2012

THESE RECORD DRAWINGS HAVE BEEN PREPARED, IN PART, ON THE BASIS OF INFORMATION COMPILED BY OTHERS. THEY ARE NOT INTENDED TO REPRESENT IN DETAIL THE EXACT LOCATION, TYPE OF COMPONENT NOR MANNER OF CONSTRUCTION. THE ENGINEER WILL NOT BE RESPONSIBLE FOR ANY ERRORS OR OMISSIONS WHICH HAVE BEEN INCORPORATED INTO THE RECORD DRAWINGS.

NOTES:

1. TRUCK SCALE PER SPECIFICATION 10880.

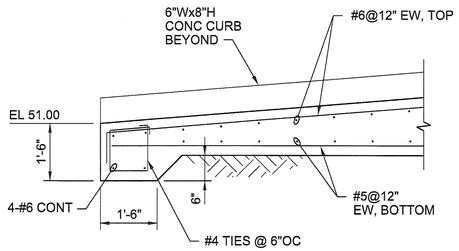

A SECTION
1/2"= 1'-0"

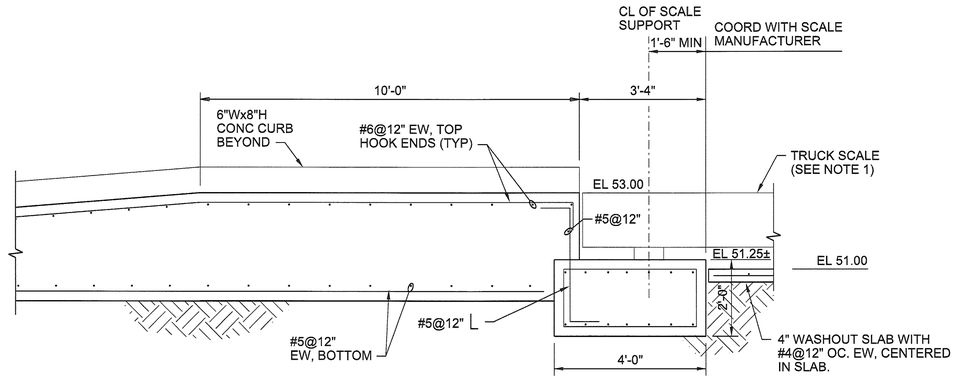

NOTE:
LENGTH OF 4'-0' WIDE FOOTING TO BE 13'-0" CENTERED ON SCALES.

B SECTION
1/2"= 1'-0"

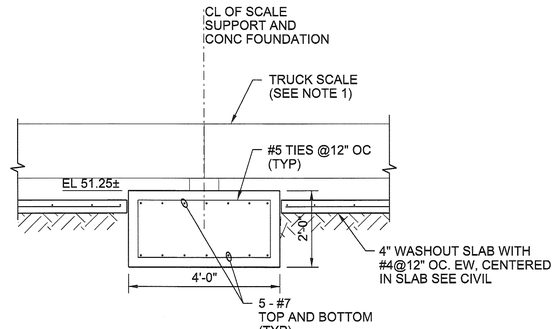

NOTE:
LENGTH OF FOOTING TO BE 13'-0" CENTERED ON SCALES.

C SECTION
1/2"= 1'-0"

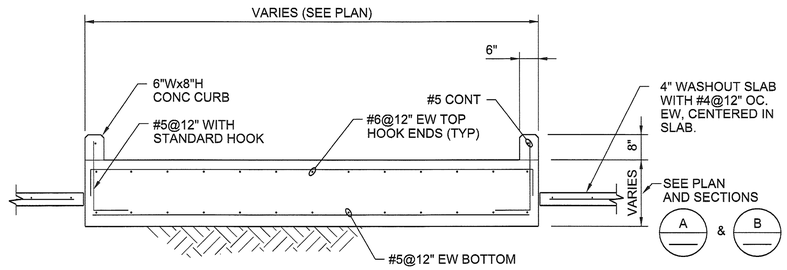

D SECTION
1/2"= 1'-0"

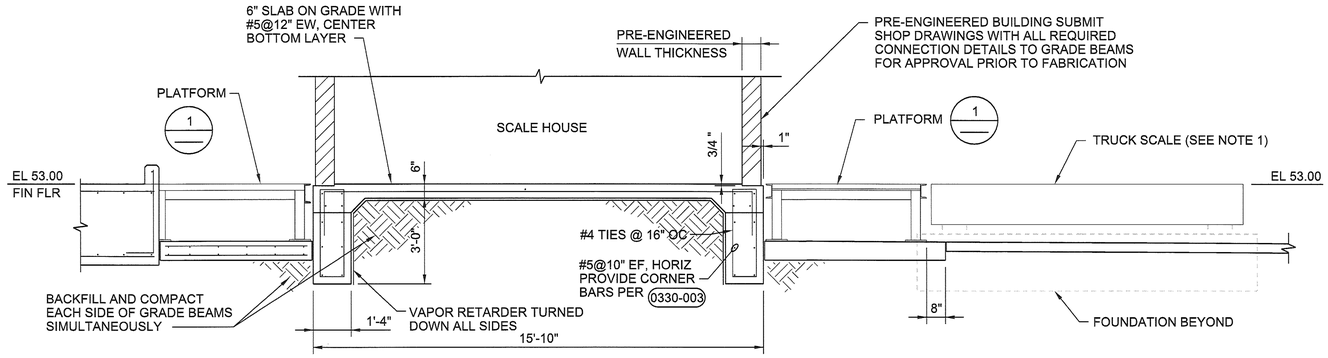

E SECTION
3/8"= 1'-0"

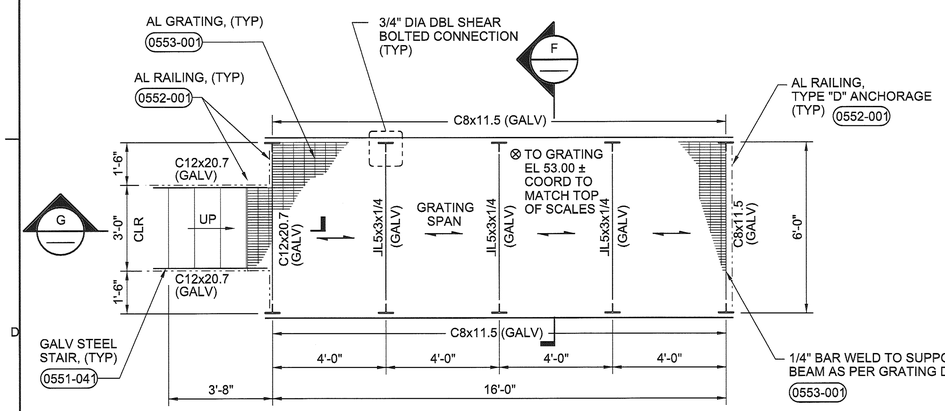

NOTE:
STAIR SHOWN IS ON SOUTH PLATFORM ONLY.

1 PLATFORM PLAN
3/8"= 1'-0"

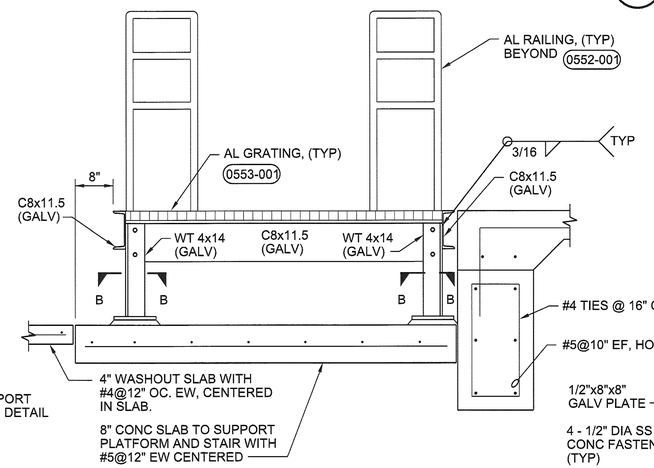

F SECTION
1/2"= 1'-0"

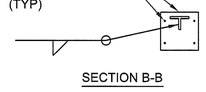

SECTION B-B

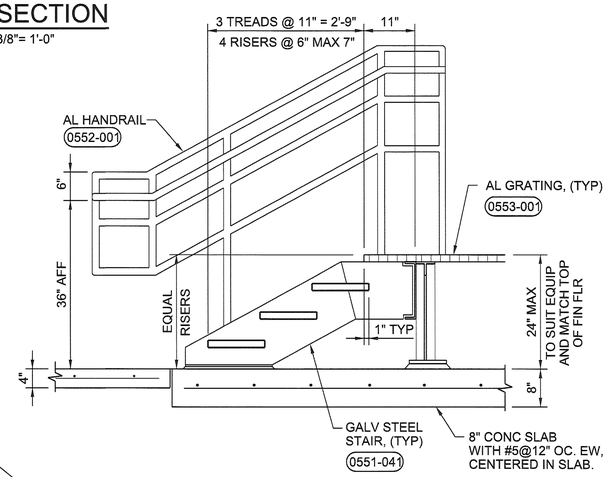

G SECTION
1/2"= 1'-0"

©CH2M HILL 2010. ALL RIGHTS RESERVED.
THESE DESIGNS INCORPORATED HEREIN, AS AN INSTRUMENT OF PROFESSIONAL SERVICE, IS THE PROPERTY OF CH2M HILL AND IS NOT TO BE USED, IN WHOLE OR IN PART, FOR ANY OTHER PROJECT WITHOUT THE WRITTEN AUTHORIZATION OF CH2MHILL.
REUSE OF DOCUMENTS: THIS DOCUMENT, AND THE IDEAS AND DESIGNS INCORPORATED HEREIN, AS AN INSTRUMENT OF PROFESSIONAL SERVICE, IS THE PROPERTY OF CH2M HILL AND IS NOT TO BE USED, IN WHOLE OR IN PART, FOR ANY OTHER PROJECT WITHOUT THE WRITTEN AUTHORIZATION OF CH2MHILL.

MONRAD R THUE * PROFESSIONAL ENGINEER * LICENSE NO. 32071 STATE OF FLORIDA 6/6/12

NO.	DATE	DSGN	DR	CHK	BY	APVD	REVISION
		M THUE	J PRUITT	M CHRZANOWSKI		APVD M THUE	

CH2MHILL
Henry L Postrozny PE 33223 (Mechanical)
3011 SW WILLISTON RD.
GAINESVILLE, FLORIDA 32608
EB0000072 AAC001992
Monrad R Thue PE 32071 (Structural)

SOLID WASTE SYSTEM
UPGRADE DESIGN
PASCO COUNTY
PASCO COUNTY, FLORIDA

STRUCTURAL
WEST PASCO SITE
SCALEHOUSE
SECTIONS AND DETAILS

VERIFY SCALE
BAR IS ONE INCH ON ORIGINAL DRAWING.
0 1"

DATE	AUGUST 2012
PROJ	378217
DWG	10-S-301
SHEET	

RECORD DRAWINGS FOR PERMIT

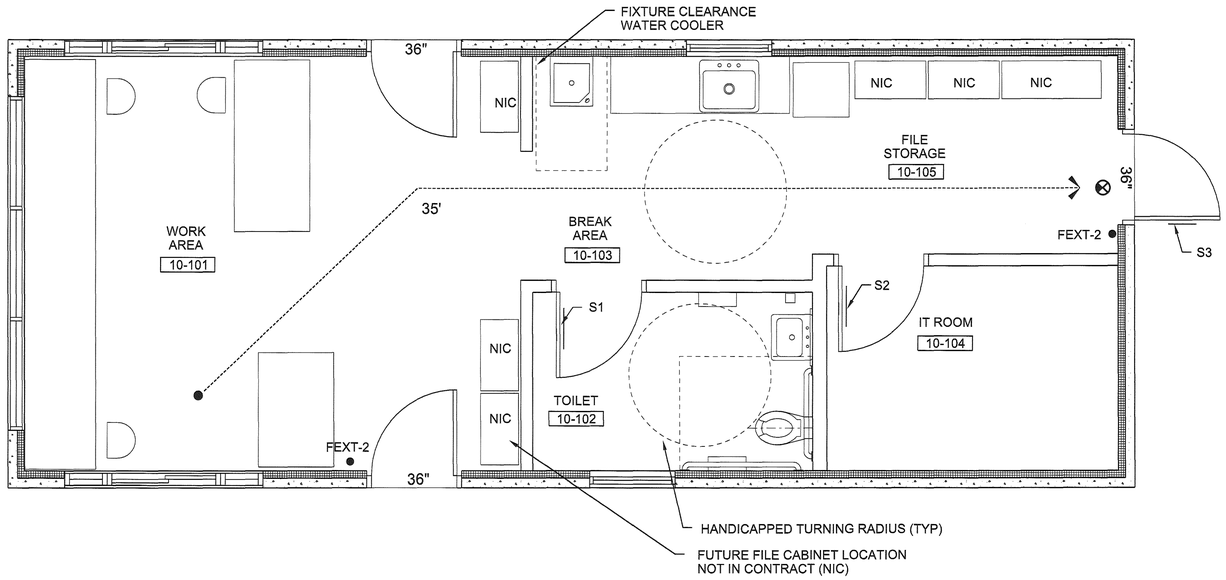

LIFE SAFETY PLAN

3/8"=1'-0"

N

0 1 2 3

3/8"=1'

GENERAL NOTES:

1. FOR SIGN INFORMATION AND TYPE DESCRIPTIONS SEE SPECIFICATIONS SECTION 10 14 00.
2. FOR ARCHITECTURAL LEGEND AND ADA FIXTURE AND ACCESSORY MOUNTING INFORMATION SEE SHEET 00-G-006.
3. FOR ABBREVIATIONS SEE SHEET 00-G-003.
4. FOR FIRE EXTINGUISHER INFORMATION SEE SPECIFICATIONS SECTION 10 44 00.
5. ALL DIMENSIONS ARE FROM FACE OF CONCRETE OR FINISH FACE OF STUD WALLS.

LEGEND

X'	TRAVEL DISTANCE (X = TOTAL DISTANCE TO EXIT IN FEET)
X"	EGRESS WIDTH (IN INCHES)
● F. EXT-1	FIRE EXTINGUISHER
● F. EXT-2	FIRE EXTINGUISHER
⊗	EXIT LIGHT, ONE SIDED
S1	SIGN CALL OUT

RECORD DRAWINGS

Revisions Drawn By K RINER Date JULY 2012

THESE RECORD DRAWINGS HAVE been PREPARED, IN PART, ON THE BASIS OF INFORMATION COMPILED BY OTHERS. THEY ARE NOT INTENDED TO REPRESENT IN DETAIL THE EXACT LOCATION, TYPE OF COMPONENT NOR MANNER OF CONSTRUCTION. THE ~~ENGINEER~~ ARCHITECT WILL NOT BE RESPONSIBLE FOR ANY ERRORS OR OMISSIONS WHICH HAVE BEEN INCORPORATED INTO THE RECORD DRAWINGS.

CODE DATA

2007 FLORIDA BUILDING CODE AS AMENDED BY LOCAL AGENCIES

SEE DRAWING 00-G-006 FOR APPLICABLE CODES.

BUILDING: WEST SCALEHOUSE

GENERAL INFORMATION

USE AND OCCUPANCY CLASSIFICATION (CHAPTER 3)	GROUP B BUSINESS
CONSTRUCTION CLASSIFICATION (CHAPTER 6)	IIB

AREA AND HEIGHT LIMITATIONS

MAXIMUM ALLOWABLE AREA (TABLE 503)		23,000 SF
ACTUAL AREA:		621 SF
ACTUAL PER FLOOR:	BASEMENT	N/A
	FIRST	621 SF
	SECOND	N/A
MAXIMUM ALLOWABLE STORIES (TABLE 503)		4
ACTUAL NUMBER OF STORIES		1
MAXIMUM ALLOWABLE HEIGHT (TABLE 503)		55 FT
ACTUAL HEIGHT:		12'-4"

OCCUPANCY / EGRESS INFORMATION

DESIGN OCCUPANCY (TABLE 1004.1.2)	1 PER 100 GROSS SF=6
ACTUAL NUMBER OF OCCUPANTS	2
EGRESS WIDTH BASED ON OCCUPANCY (TABLE 1005.1)	1.2 IN (36 IN PROVIDED)
ALLOWABLE DEAD END LENGTH (TABLE 1016.3)	20 FT
NUMBER OF EXITS	1
ALLOWABLE COMMON PATH OF TRAVEL (1013.3)	75 FT
MAX TRAVEL DISTANCE ALLOWED (TABLE 1015.1)	75 FT

REQUIRED FIRE RESISTANT RATINGS

BUILDING ELEMENTS (TABLE 601)	
STRUCTURAL FRAME	0 HR
EXTERIOR BEARING WALLS	0 HR
INTERIOR BEARING WALLS	0 HR
INTERIOR NON-BEARING WALLS	0 HR
FLOOR CONSTRUCTION	0 HR
ROOF CONSTRUCTION	0 HR
SHAFT ENCLOSURE (707.4)	N/A
STAIRWAY ENCLOSURE (1019.1)	N/A
CORRIDOR (TABLE 1016.1)	0 HR

OCCUPANCY SEPARATION (302.3.2)	N/A
INCIDENTAL USE AREAS (302.1.1)	N/A
FIRE SEPARATION DISTANCE (TABLE 602)	> 20 FT = 0 HR
DISTANCE FROM ADJACENT BUILDING OR PROPERTY LINE (TABLE 602)	> 20 FT = 0 HR

FIRE PROTECTION

SPRINKLERS	NOT REQUIRED, NOT PROVIDED
FIRE EXTINGUISHERS	PROVIDED
EXIT LIGHTING	PROVIDED

PLUMBING FIXTURES (FPC 403.1)

OCCUPANCY								
MINIMUM FIXTURE COUNT	WC		LAV		SHOWER	0	SINK	0
	M	F	M	F				
	1	1	1	1	DF	1	SS	1
ACTUAL FIXTURE COUNT	WC		LAV		SHOWER	0	SINK	1
	M	F	M	F				
	1		1		DF	1	SS	0
URINALS (FPC 419.2)	NOT MORE THAN 50% OF WC REQ.							

STATE OF FLORIDA — BETH TRAUTWEIN — REGISTERED ARCHITECT — 91388

NO.	DATE	DSGN
		B TRAUTWEIN
		DR A COULLIAS
		CHK T DODGE
		APVD B TRAUTWEIN
		BY APVD

REVISION

©CH2M HILL 2010. ALL RIGHTS RESERVED.

THIS DOCUMENT, AND THE IDEAS AND DESIGNS INCORPORATED HEREIN, AS AN INSTRUMENT OF PROFESSIONAL SERVICE, IS THE PROPERTY OF CH2M HILL AND IS NOT TO BE USED, IN WHOLE OR IN PART, FOR ANY OTHER PROJECT WITHOUT THE WRITTEN AUTHORIZATION OF CH2MHILL

REUSE OF DOCUMENTS:

3011 SW WILLISTON RD
GAINESVILLE, FLORIDA 32608
EB0000072 AAC001992
Beth Trautwein AR 91388

CH2MHILL

SOLID WASTE SYSTEM
UPGRADE DESIGN
PASCO COUNTY
PASCO COUNTY, FLORIDA

ARCHITECTURAL
WEST PASCO SITE
SCALEHOUSE LIFE SAFETY PLAN
& CODE INFORMATION

RECORD DRAWINGS FOR PERMIT

VERIFY SCALE

BAR IS ONE INCH ON ORIGINAL DRAWING.
0 1"

DATE	AUGUST 2012
PROJ	378217
DWG	10-A-101
SHEET	

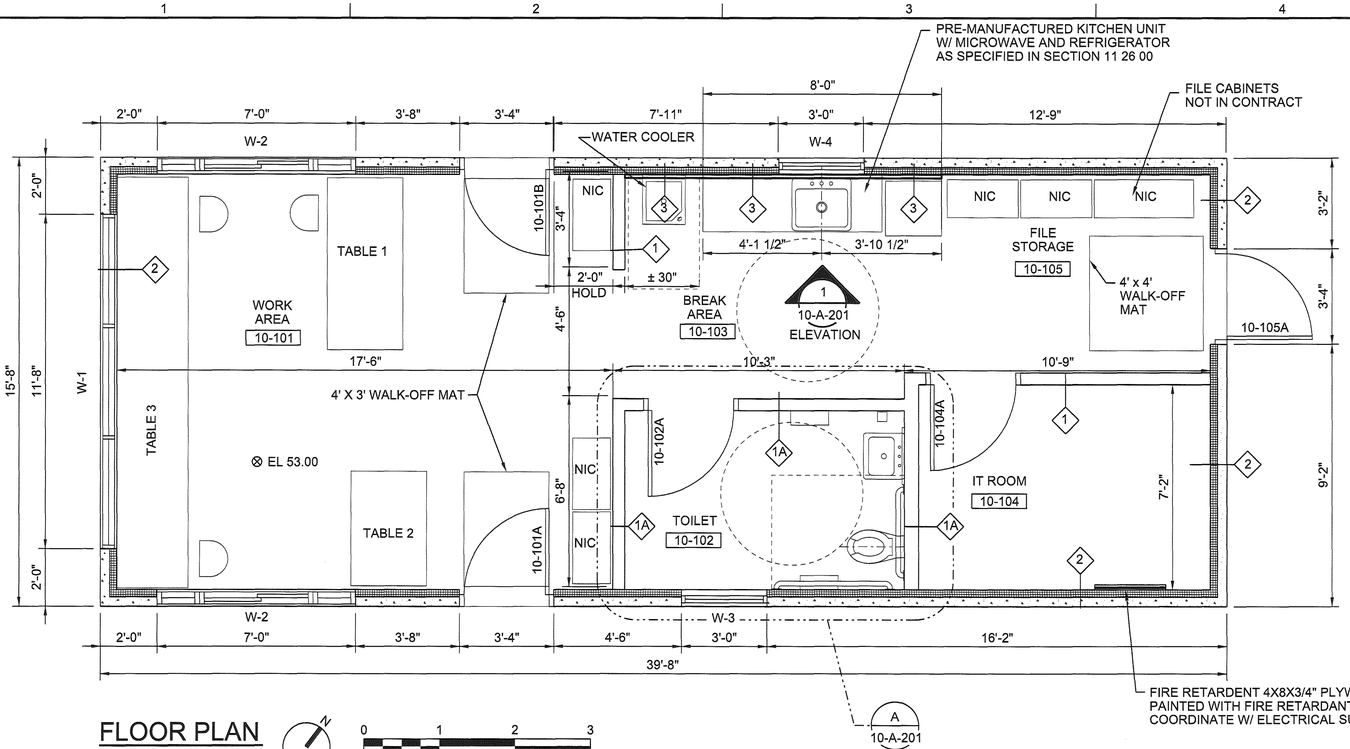

FLOOR PLAN

3/8"=1'-0"

0 1 2 3

3/8"=1'

NOTE: THIS STRUCTURE IS A PRE-ENGINEERED CONCRETE STRUCTURE. AS SPECIFIED IN SECTION 13 34 23.

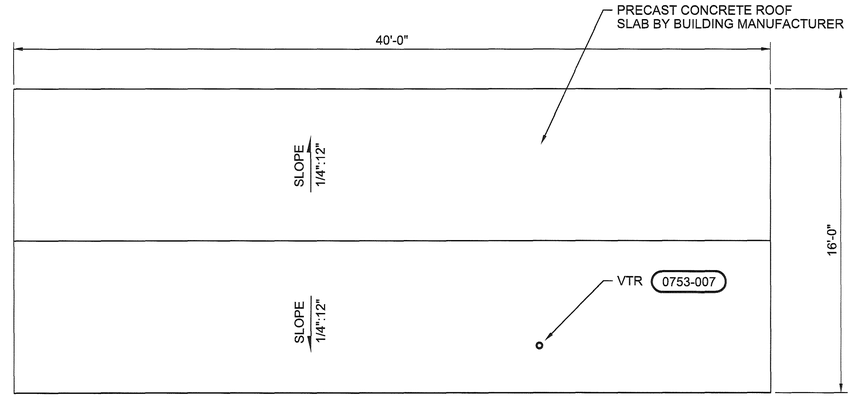

ROOF PLAN

1/4"=1'-0"

GENERAL NOTES:

1. FOR ARCHITECTURAL LEGEND SEE DRAWING 00-G-006.
2. FOR LIFE SAFETY PLAN, SEE DRAWING 10-A-101.
3. FOR DOOR AND HARDWARE DESCRIPTIONS SEE SPECIFICATION SECTION 08 71 00.
4. FOR WINDOW DESCRIPTIONS SEE SPECIFICATION SECTION 08 51 13.
5. FOR FINISH SCHEDULE SEE SPECIFICATION SECTION 09 06 00.
6. ALL INTERIOR HINGE SIDE OF DOORS IN GYP WALL BOARD WALL SHALL BE PLACED 3" FROM PERPENDICULAR WALL UNLESS OTHERWISE NOTED.
7. FOR ADA DESIGN REQUIREMENTS, SEE DRAWING 00-G-006.
8. FOR ADDTIONAL INFORMATION ON LABELED FURNITURE SHOWN ON THE FLOOR PLAN, SEE SPECIFICATION 06 40 00 ARCHITECTURAL WOODWORK AND DRAWING 20-A-501.
9. AN ALLOWANCE OF $10,000 IS REQUIRED TO SUPPLEMENT THE SCOPE OF SPECIFICATION 06 40 00 ARCHITECTURAL WOODWORK FOR MANUFACTURED FURNITURE ITEMS FOR THE SCALEHOUSE.
10. FOR SIGN LOCATIONS SEE DRAWING 10-A-101.
11. FOR LOUVERS DESCRIPTION SEE SPECIFICATION SECTION 08 90 00.
12. NIC MEANS "NOT IN CONTRACT".
13. FOR GUARD POSTS LOCATIONS, SEE STRUCTURAL \ CIVIL DRAWINGS.
14. FOR INFORMATION ON VIDEO MONITORS. SEE CCTV BLOCK DIAGRAM ON ELECTRICAL DRAWINGS.
15. ALL INTERIOR DIMENSIONS ARE FROM THE FACE OF THE GYPSUM BOARD UNLESS OTHERWISE NOTED.
16. FOR FIRE PROTECTION FIRE EXTINGUISHER INFORMATION, SEE SPECIFICATION SECTION 10 44 00.
17. ALL FASTENERS USED TO CONNECT INTERIOR "BUILD-OUT" MEMBERS SHALL BE GALVANIZED CONCRETE SCREW ANCHORS AND SHALL BE PRE-DRILLED. COORDINATE WITH THE PRECAST BUILDING MANUFACTURER PRIOR TO PENETRATING CONCRETE WALLS, SLABS AND CEILINGS WITH ANY FASTENERS.

RECORD DRAWINGS

Revisions Drawn By K RINER Date JULY 2012

THESE RECORD DRAWINGS HAVE BEEN PREPARED, IN PART, ON THE BASIS OF INFORMATION COMPILED BY OTHERS. THEY ARE NOT INTENDED TO REPRESENT IN DETAIL THE EXACT LOCATION, TYPE OF COMPONENT NOR MANNER OF CONSTRUCTION. THE ~~ENGINEER~~ ARCHITECT WILL NOT BE RESPONSIBLE FOR ANY ERRORS OR OMISSIONS WHICH HAVE BEEN INCORPORATED INTO THE RECORD DRAWINGS.

WALL TYPES

GENERAL WALL FRAMING NOTE:

GENERAL CONTRACTOR TO COORDINATE LOCATION OF EXTRA STUDS AS REQUIRED IN ALL WALL TYPES FOR SUPPORT AND/OR MOUNTING OF ELECTRICAL, PLUMBING OR HVAC EQUIPMENT AS SHOWN ON DRAWINGS.

1	0 HR	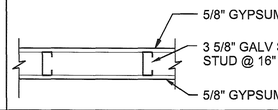	MIN 6" ABOVE CEILING HEIGHT
1A	0 HR	TYPE 1 W/ FULL THICK SOUND ATTENUATION BATT	FULL HEIGHT
2	0 HR	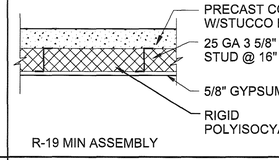 R-19 MIN ASSEMBLY	FULL HEIGHT
3	0 HR	SAME AS TYPE 2 BUT WITH 6" GALV STEEL C CHANNEL @ 16" SPACING TO SUPPORT WATER COOLER.	FULL HEIGHT

PRE-ENGINEERED BUILDINGS AND COMPONENTS IN FLORIDA

THE PRE-ENGINEERED BUILDING DRAWINGS AND SPECIFICATIONS INCLUDE CLADDING COMPONENTS SUCH AS WINDOWS, DOORS , FRAMES AND LOUVERS. SPECIFICATIONS SECTIONS QUALIFY EACH COMPONENTS AND DEVELOPED RESISTANT WIND PRESSURES ARE SHOWN ON THE DOOR AND HARDWARE SCHEDULE, THE WINDOW SCHEDULE AND THE LOUVER SCHEDULE.

THE PRE-ENGINEERED BUILDING MANUFACTURER MAY SUBMIT, AS PART OF THE SHOP DRAWINGS PROCESS, COMPONENTS TO BE SUPPLIED AND INSTALLED PROVIDING THIRD PARTY TESTING INFORMATION OR FLORIDA LICENSED ENGINEER CALCULATIONS ARE SUBMITTED FOR APPROVAL ESTABLISHING THE MANUFACTUER'S STANDARD COMPONENTS AS MEETING THE CRITERIA ESTABLISHED BY THE PROJECT SPECIFICATIONS FOR EACH CLADDING COMPONENT.

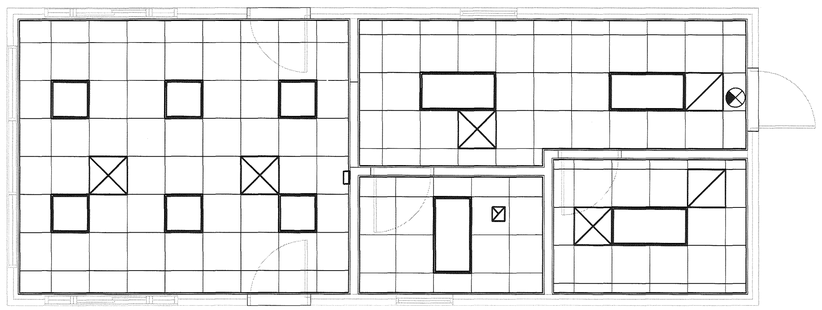

REFLECTED CEILING PLAN

1/4"=1'-0"

REFLECTED CEILING LEGEND:

- 5/8" GLASS MATT GYPSUM SHEATHING
- SUSPENDED ACOUSTICAL CEILING
- EXIT LIGHT FIXTURE
- 2'-0" X 4'-0" RECESSED MOUNTED FLUORESCENT LIGHT FIXTURE FLUSH MOUNTED
- 2'-0" X 2'-0" RECESSED MOUNTED FLUORESCENT LIGHT FIXTURE FLUSH MOUNTED
- 1'-0" X 1'-0" EXHAUST
- 2'-0" X 2'-0" RETURN
- 2'-0" X 2'-0" SUPPLY

©CH2M HILL 2010. ALL RIGHTS RESERVED.
REUSE OF DOCUMENTS: THIS DOCUMENT, AND THE IDEAS AND DESIGNS INCORPORATED HEREIN, AS AN INSTRUMENT OF PROFESSIONAL SERVICE IS THE PROPERTY OF CH2M HILL AND IS NOT TO BE USED, IN WHOLE OR IN PART, FOR ANY OTHER PROJECT WITHOUT THE WRITTEN AUTHORIZATION OF CH2MHILL

STATE OF FLORIDA — BETH TRAUTWEIN — REGISTERED ARCHITECT — 91388

NO.	DATE	DSGN	DR	CHK	APVD	BY	REVISION
		B TRAUTWEIN	A COULIAS	T DODGE	B TRAUTWEIN	APVD	

CH2MHILL
3011 SW WILLISTON RD
GAINESVILLE, FLORIDA 32608
EB0000072 AAC001992
Beth Trautwein AR 91388

SOLID WASTE SYSTEM
UPGRADE DESIGN
PASCO COUNTY
PASCO COUNTY, FLORIDA

ARCHITECTURAL
WEST PASCO SITE
SCALEHOUSE FLOOR PLAN, ROOF PLAN & REFLECTED CEILING PLAN

RECORD DRAWINGS FOR PERMIT

VERIFY SCALE
BAR IS ONE INCH ON ORIGINAL DRAWING.
0 1"

DATE	AUGUST 2012
PROJ	378217
DWG	10-A-102
SHEET	

NDM SERVER: GNV FILENAME: dn10A102_378217.dgn PLOT DATE: 8/3/2012 PLOT TIME: 11:17:59 AM

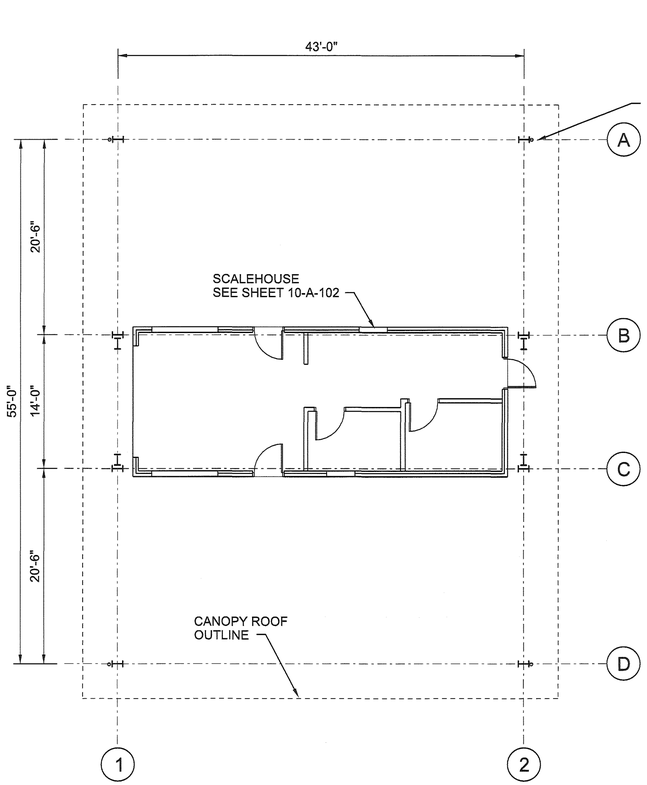

FLOOR PLAN

1/8"=1'-0"

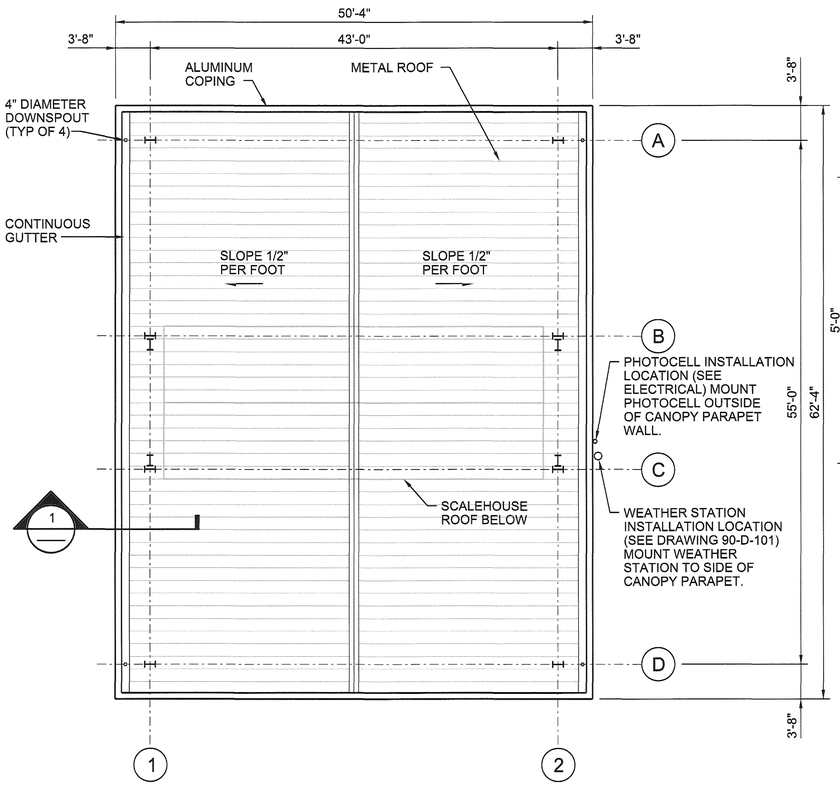

ROOF PLAN

1/8"=1'-0"

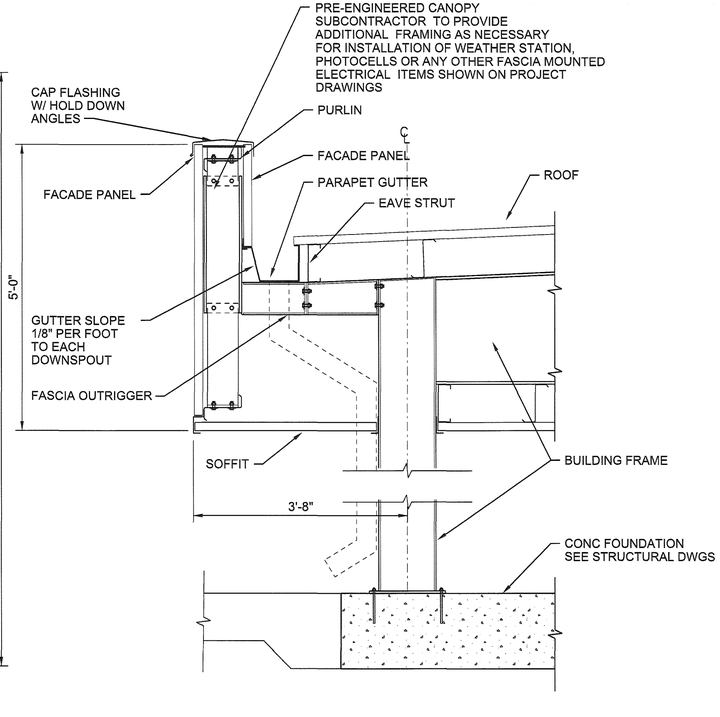

1 DETAIL

3/4"=1'-0"

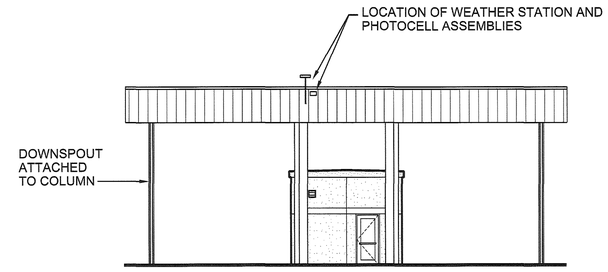

EAST ELEVATION

3/32"=1'-0"

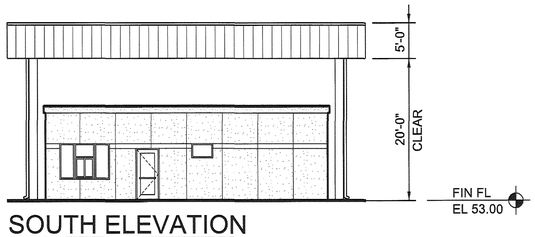

SOUTH ELEVATION

3/32"=1'-0"

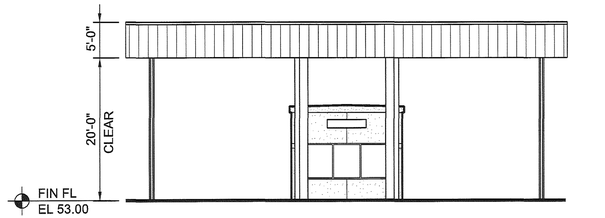

WEST ELEVATION

3/32"=1'-0"

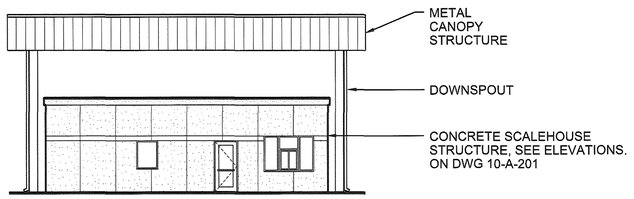

NORTH ELEVATION

3/32"=1'-0"

NOTE: THE CANOPY IS A PRE-ENGINEERED METAL STRUCTURE AS SPECIFIED IN SECTION 13 34 19

RECORD DRAWINGS

Revisions Drawn By K RINER Date JULY 2012

THESE RECORD DRAWINGS HAVE BEEN PREPARED, IN PART, ON THE BASIS OF INFORMATION COMPILED BY OTHERS. THEY ARE NOT INTENDED TO REPRESENT IN DETAIL THE EXACT LOCATION, TYPE OF COMPONENT NOR MANNER OF CONSTRUCTION. THE ~~ENGINEER~~ ARCHITECT WILL NOT BE RESPONSIBLE FOR ANY ERRORS OR OMISSIONS WHICH HAVE BEEN INCORPORATED INTO THE RECORD DRAWINGS.

STATE OF FLORIDA · KEITH HACKETT · AR91388 · REGISTERED ARCHITECT

NO.	DATE	DSGN	DR	CHK	REVISION	BY	APVD
		B TRAUTWEIN	A COULLIAS	T DODGE	APVD	B TRAUTWEIN	

©CH2M HILL 2010. ALL RIGHTS RESERVED.
THIS DOCUMENT, AND THE IDEAS AND DESIGNS INCORPORATED HEREIN, AS AN INSTRUMENT OF PROFESSIONAL SERVICE, IS THE PROPERTY OF CH2M HILL AND IS NOT TO BE USED, IN WHOLE OR IN PART, FOR ANY OTHER PROJECT WITHOUT THE WRITTEN AUTHORIZATION OF CH2MHILL.
REUSE OF DOCUMENTS:
RECORD DRAWINGS FOR PERMIT

3011 SW WILLISTON RD
GAINESVILLE, FLORIDA 32608
EB0000072 AAC001992
Beth Trautwein AR 91388

SOLID WASTE SYSTEM
UPGRADE DESIGN
PASCO COUNTY
PASCO COUNTY, FLORIDA

CH2MHILL

ARCHITECTURAL
WEST PASCO SITE
SCALEHOUSE CANOPY
FLOOR \ ROOF PLAN & DETAIL

VERIFY SCALE

BAR IS ONE INCH ON ORIGINAL DRAWING.
0 1"

DATE	AUGUST 2012
PROJ	378217
DWG	10-A-103
SHEET	

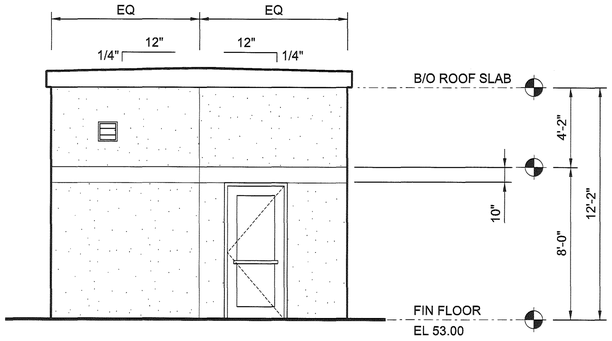

WEST ELEVATION
1/4"=1'-0"

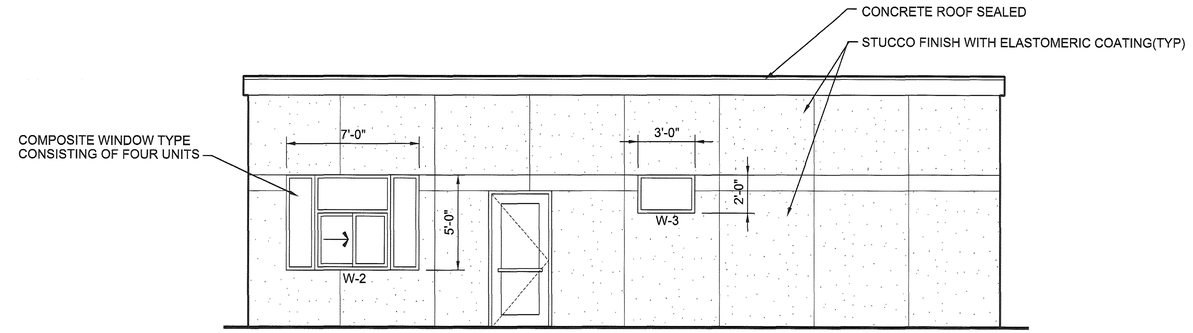

SOUTH ELEVATION
1/4"=1'-0"

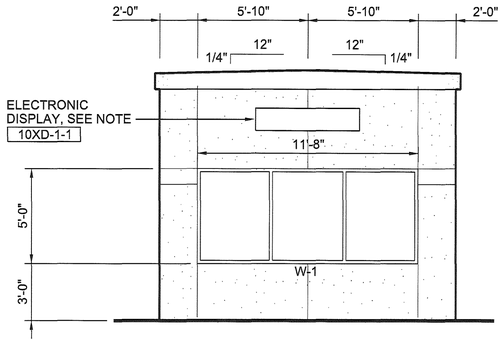

EAST ELEVATION
1/4"=1'-0"

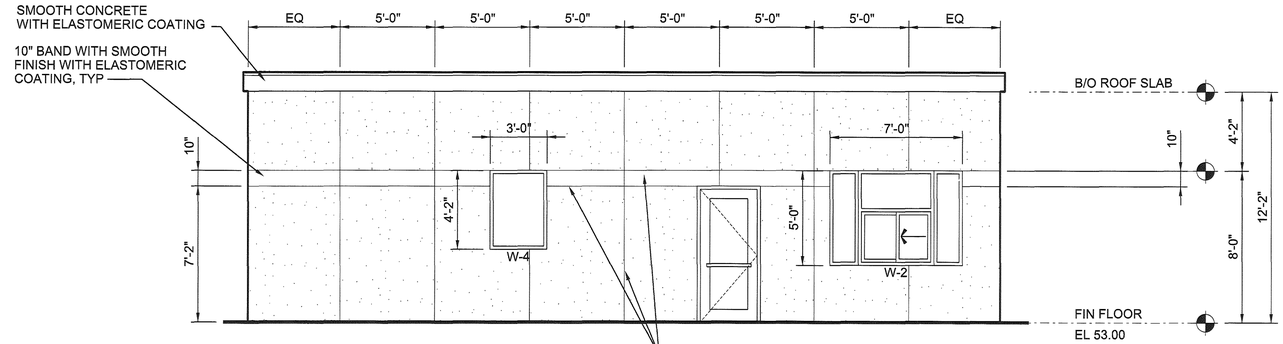

NORTH ELEVATION
1/4"=1'-0"

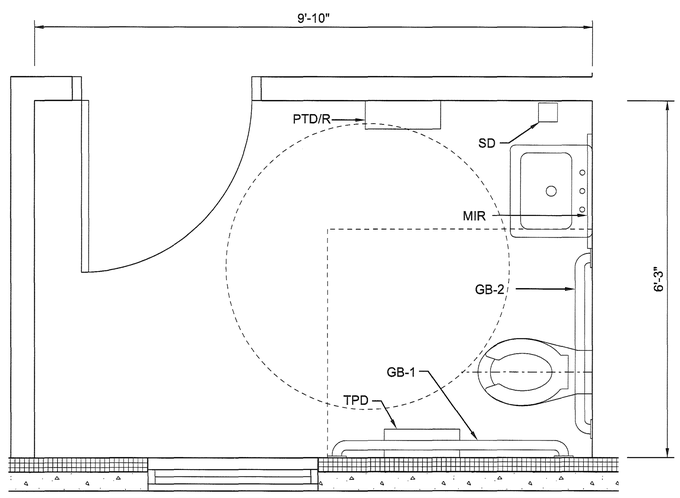

A ENLARGED PLAN
3/4"=1'-0"

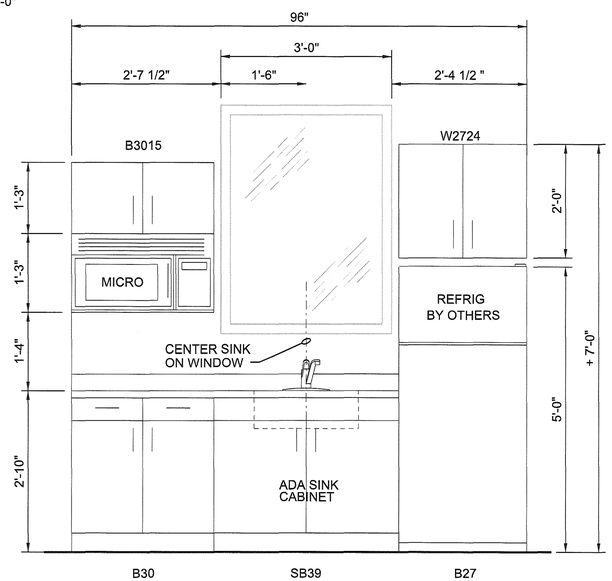

1 INTERIOR ELEVATION
3/4"=1'-0"

PRE-MANUFACTURED UNIT KITCHEN AS SPECIFIED IN SECTION 11 26 00

RECORD DRAWINGS

Revisions Drawn By K RINER Date JULY 2012

THESE RECORD DRAWINGS HAVE BEEN PREPARED, IN PART, ON THE BASIS OF INFORMATION COMPILED BY OTHERS. THEY ARE NOT INTENDED TO REPRESENT IN DETAIL THE EXACT LOCATION, TYPE OF COMPONENT NOR MANNER OF CONSTRUCTION. THE ENGINEER WILL NOT BE RESPONSIBLE FOR ANY ERRORS OR OMISSIONS WHICH HAVE BEEN INCORPORATED INTO THE RECORD DRAWINGS.

NOTE:

1. FOR ELECTRONIC DISPLAY TAG INFORMATION SEE DRAWING 90-D-601

NO.	DATE	DSGN	DR	CHK	APVD	BY	REVISION
		B TRAUTWEIN	A COULLIAS	T DODGE	APVD	B TRAUTWEIN	

©CH2M HILL 2010. ALL RIGHTS RESERVED.
REUSE OF DOCUMENTS: THIS DOCUMENT AND THE IDEAS AND DESIGNS INCORPORATED AS AN INSTRUMENT OF PROFESSIONAL SERVICE, IS THE PROPERTY OF CH2M HILL AND IS NOT TO BE USED, IN WHOLE OR IN PART, FOR ANY OTHER PROJECT WITHOUT THE WRITTEN AUTHORIZATION OF CH2MHILL

3011 SW WILLISTON RD
GAINESVILLE, FLORIDA 32608
EB0000072 AAC001992
Beth Trautwein AR 91388

SOLID WASTE SYSTEM
UPGRADE DESIGN
PASCO COUNTY
PASCO COUNTY, FLORIDA

CH2MHILL

ARCHITECTURAL
WEST PASCO SITE
SCALEHOUSE
ELEVATIONS

RECORD DRAWINGS FOR PERMIT

VERIFY SCALE
BAR IS ONE INCH ON ORIGINAL DRAWING.
0 1"

DATE	AUGUST 2012
PROJ	378217
DWG	10-A-201
SHEET	

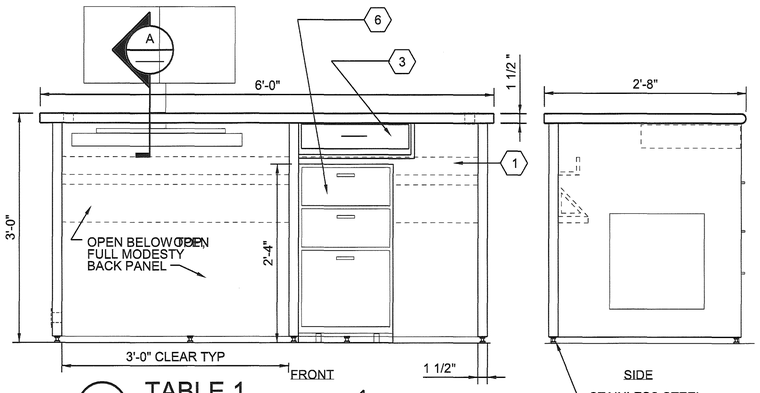

1 TABLE 1
1"=1'-0"

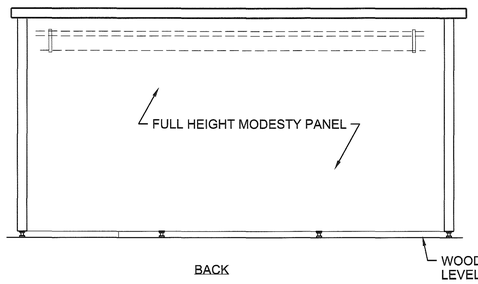

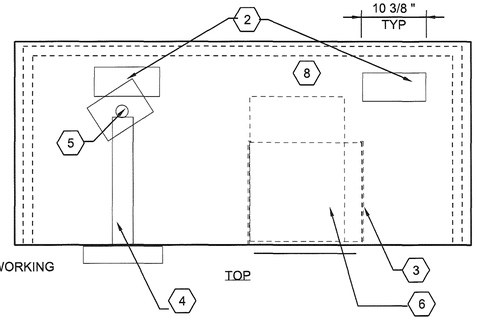

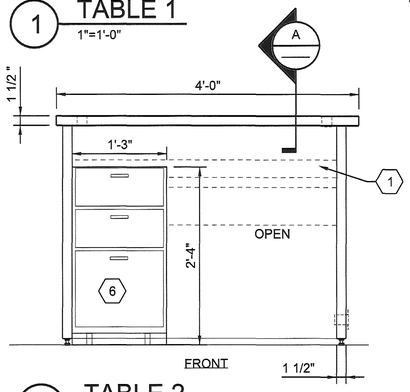

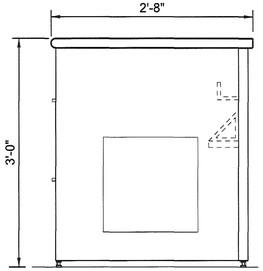

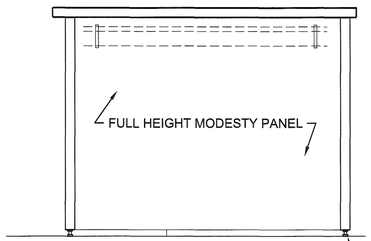

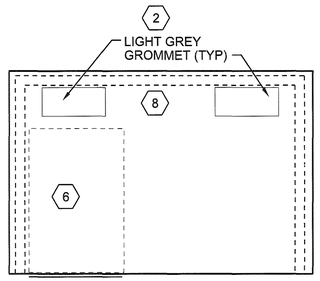

GENERAL NOTES:

1. ALL EXPOSED SURFACE INTERIOR & EXTERIOR (AS THOUGH THERE IS NO PEDESTALS) TO BE PLASTIC LAMINATE AS SCHEDULED IN COLOR LIST.
2. FOR ADDITIONAL INFORMATION, SEE ARCH WOODWORK SPEC 06 40 00

FURNITURE AND EQUIPMENT

QNTY	SYMBOL	NAME	DESCRIPTION
3(TABLE 1) 2(TABLE 2) 6(TABLE 3)	1	CABLE MANAGER CHANNEL	35" WIRE MANAGER CHANNEL PART#VI-WT35IN REAR MOUNT OR TOP MOUNT PER MILLWORKER 35 1/32" WIDE X 2 11/16" X3 3/8" HIGH SOURCE: CABLEORGANIZER.COM/ UNDER-DESK-WIRE-TRAY/
9	2	10"Wx3"D RECTANGULAR GROMMET	CABLE GROMMET KING SIZE, LIGHT GREY (CLOSET-MASTERS.COM) 10"Wx4"D
3 TYP	3	CASH DRAWER	OFFICE DEPOT #407775 : MANUFACTURER RTP-009039 3 7/8" H X 17 3/4" WIDE X 15 7/8" DEEP REMOVABLE TRAY AND COVER, KEY, 1 TOUCH BUTTON SIDE MOUNT
3	4	KEYBOARD TRAY AND MOUSE PAD	COBRA SIT STAND KEYBOARD ASSEMBLY HEIGHT ADJ 7" UP AND 5.5 " DOWN 360 DEGREE SWIVAL FULLY RETRACTABLE 23 INCH TRACK BLACK POWDER STEEL WITH GEL RESTS
3	5	ERGOTRON DUAL MONITOR HOLDER	SIDE BY SIDE ARM EXTENDS lcd OUT UP TO 25" ADJUSTMENT RANGE OF 18" INDIVIDUAL MONITOR 7-20 LBS GROMMET MOUNT REQUIRES 5/16" TO 2"DIAMETER X 3" MAX HOLE WARRANTY 5 YEARS
4	6	MOBILE B/B/F	HON B/B/F MOBILE PEDESTAL 15" W X 22.85"D X 28" H CHARCOAL, SECURITY LOCK
2	7	MOBILE F/F	HON F/F MOBILE PEDESTAL H15" W X 22.85"D X 28" H CHARCOAL, SECURITY LOCK
3	8	SQUARE CONVENIENCE DESK OUTLET	GSA PART #FSR-T3-AC2SQ DESK TOP W/ 2(AC) AND (2) KEYSTONE HOLE DIAMETER 3.25" 4.25" LONG X 6.2" WIDE X 3.72" DEEP

RECORD DRAWINGS

Revisions Drawn By K RINER Date JULY 2012

THESE RECORD DRAWINGS HAVE BEEN PREPARED, IN PART, ON THE BASIS OF INFORMATION COMPILED BY OTHERS. THEY ARE NOT INTENDED TO REPRESENT IN DETAIL THE EXACT LOCATION, TYPE OF COMPONENT NOR MANNER OF CONSTRUCTION. THE ~~ENGINEER~~ Architect WILL NOT BE RESPONSIBLE FOR ANY ERRORS OR OMISSIONS WHICH HAVE BEEN INCORPORATED INTO THE RECORD DRAWINGS.

2 TABLE 2
1"=1'-0"

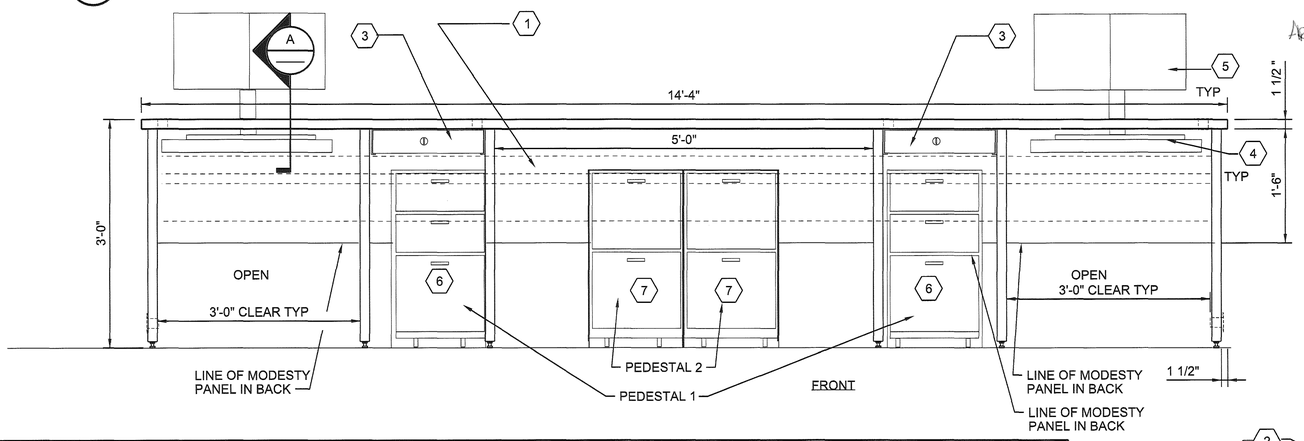

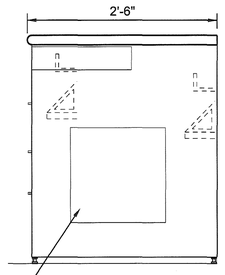

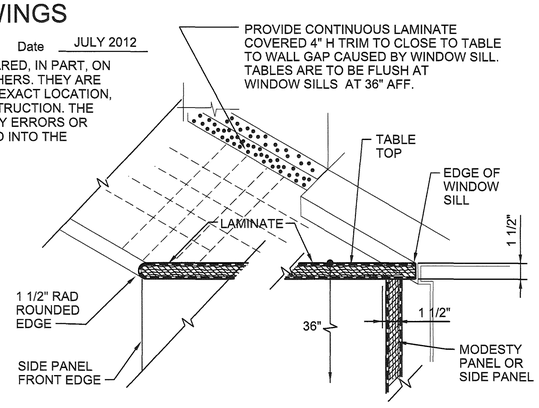

A DETAIL TABLE AT WINDOWS
3"=1"

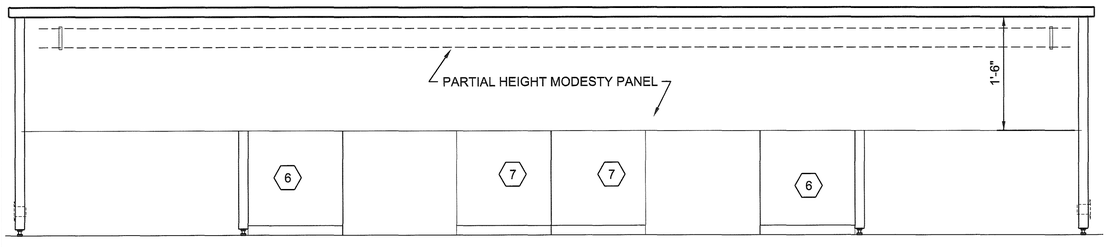

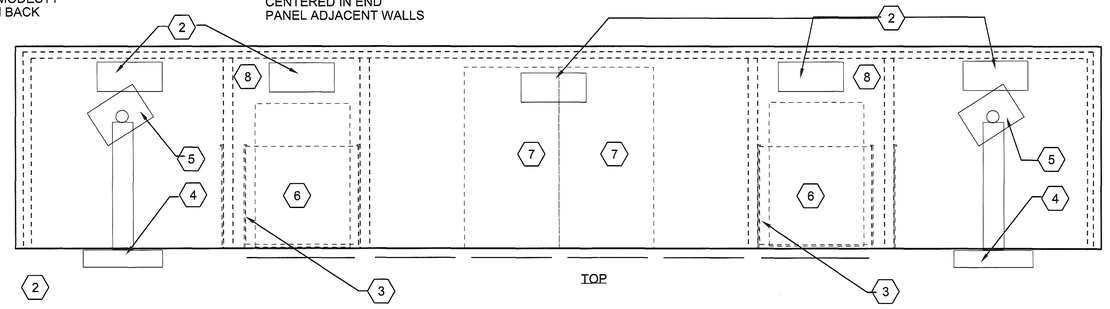

3 TABLE 3
1"=1'-0"

3011 SW WILLISTON RD.
GAINESVILLE, FLORIDA 32608
EB00000072 AAC001992
Beth Trautwein AR 91388

SOLID WASTE SYSTEM
UPGRADE DESIGN
PASCO COUNTY
PASCO COUNTY, FLORIDA

CH2MHILL

ARCHITECTURAL
WEST PASCO SITE
SCALEHOUSE
MILLWORK AND DETAILS

NO.	DATE	DSGN
DR	A COULLIAS	B TRAUTWEIN
CHK	T DODGE	APVD
REVISION	BY	APVD
	B TRAUTWEIN	

VERIFY SCALE
BAR IS ONE INCH ON ORIGINAL DRAWING.
0 1"

DATE	AUGUST 2012
PROJ	378217
DWG	10-A-501
SHEET	

RECORD DRAWINGS FOR PERMIT

REUSE OF DOCUMENTS: THIS DOCUMENT, AND THE IDEAS AND DESIGNS INCORPORATED HEREIN, AS AN INSTRUMENT OF PROFESSIONAL SERVICE, IS THE PROPERTY OF CH2M HILL AND IS NOT TO BE USED, IN WHOLE OR IN PART, FOR ANY OTHER PROJECT WITHOUT THE WRITTEN AUTHORIZATION OF CH2MHILL.
©CH2M HILL 2010. ALL RIGHTS RESERVED.

SCALE HOUSE SEQUENCE OF OPERATION:

SPLIT SYSTEM AIR CONDITIONING UNIT, DX COOLING, ELECTRIC HEATING (10-AHU/CU-1)

GENERAL:
THE SYSTEM SHALL BE CONTROLLED VIA WALL MOUNTED 7-DAY PROGRAMMABLE THERMOSTAT LOCATED IN THE WORK ROOM. SWITCHOVER BETWEEN HEATING AND COOLING SHALL OCCUR AUTOMATICALLY.

BUILDING OCCUPANCY:
HOURS OF OCCUPANCY SHALL BE SET BY THE USER/OWNER AND SHALL BE ADJUSTABLE AT THE CONTROLLER.

SET POINTS:
ALL SET POINTS SHALL BE ADJUSTABLE BY THE USER AT THE CONTROLLER.
OCCUPIED:
COOLING SET POINT TEMPERATURE: 75 DEGREES F (ADJ).
HEATING SET POINT TEMPERATURE: 70 DEGREES F (ADJ).
UNOCCUPIED:
COOLING SET POINT TEMPERATURE: 85 DEGREES F (ADJ).
HEATING SET POINT TEMPERATURE: 60 DEGREES F (ADJ).

OCCUPIED OPERATION:
THE UNIT SUPPLY FAN SHALL RUN CONTINUOUSLY AND THE OUTSIDE AIR DAMPER SHALL BE OPEN. UPON A CALL FOR HEATING OR COOLING, THE THERMOSTAT SHALL CONTROL DX COOLING CYCLES OR ELECTRIC HEATING STAGES TO MAINTAIN OCCUPIED SET POINTS.

UNOCCUPIED OPERATION:
THE UNIT SUPPLY FAN SHALL BE DE-ENERGIZED AND THE OUTSIDE AIR DAMPER SHALL BE CLOSED. UPON A CALL FOR HEATING OR COOLING, THE SUPPLY FAN SHALL ENERGIZE AND THE THERMOSTAT SHALL CONTROL DX COOLING CYCLES OR ELECTRIC HEATING STAGES TO MAINTAIN UNOCCUPIED SET POINTS.

GENERAL EXHAUST FAN (10-EF-1)

EXHAUST FAN EF-1 IS CONTROLLED VIA WALL SWITCH WITH TIME CONTROL.

GENERAL NOTES:

A. REFER TO ARCHITECTURAL REFLECTED CEILING PLAN FOR EXACT LOCATION OF DIFFUSERS AND GRILLES.

B. ALL DUCTWORK IS GALVANIZED STEEL, UNLESS OTHERWISE NOTED. REFER TO SPECIFICATIONS FOR ADDITIONAL REQUIREMENTS.

KEYNOTES:

1. AIR HANDLING UNIT SUSPENDED FROM STRUCTURE (2381-034) LOCATED ABOVE CEILING.
2. CABINET EXHAUST FAN, SUPPORT FROM STRUCTURE PER MANUFACTURER'S RECOMMENDATIONS.
3. MANUFACTURER'S RECOMMENDED SERVICE CLEARANCE.
4. REFRIGERANT LINE, ROUTE ABOVE GRADE. (2323-184)
5. OUTSIDE AIR INTAKE LOUVER, PROVIDE BIRDSCREEN AND PLENUM BOX. (2331-801)
6. WALL CAP PROVIDED BY FAN EQUIPMENT MANUFACTURER.
7. CONDENSATE DRAIN LINE, FULL SIZE OF UNIT CONNECTION. PIPE WITH TRAP AND SLOPE 1/8" PER FOOT TO DRYWELL. REFER TO (2213-100) FOR PIPING.
8. PROVIDE AUXILLIARY DRAIN PAN WITH FLOAT SWITCH FOR UNIT SHUTDOWN. PROVIDE 3/4" DRAIN LINE FROM DRAIN PAN TO DRYWELL.

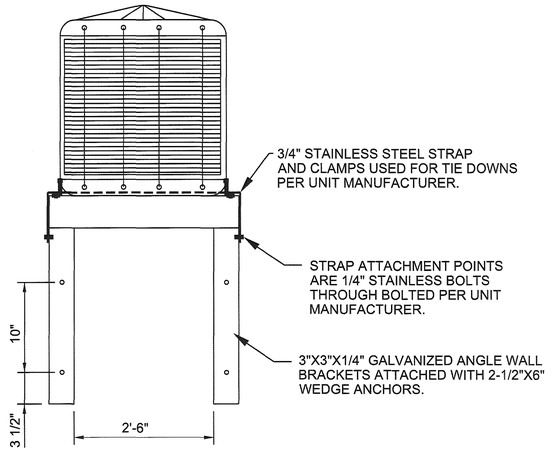

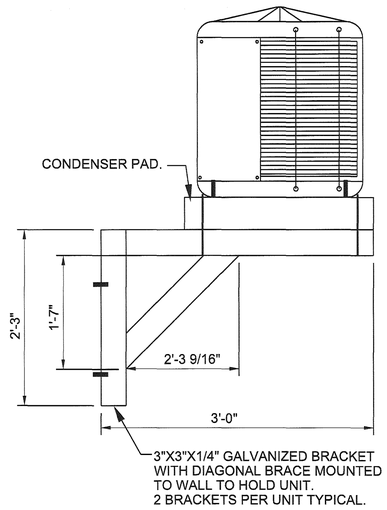

CONDENSER SUPPORT DETAIL:

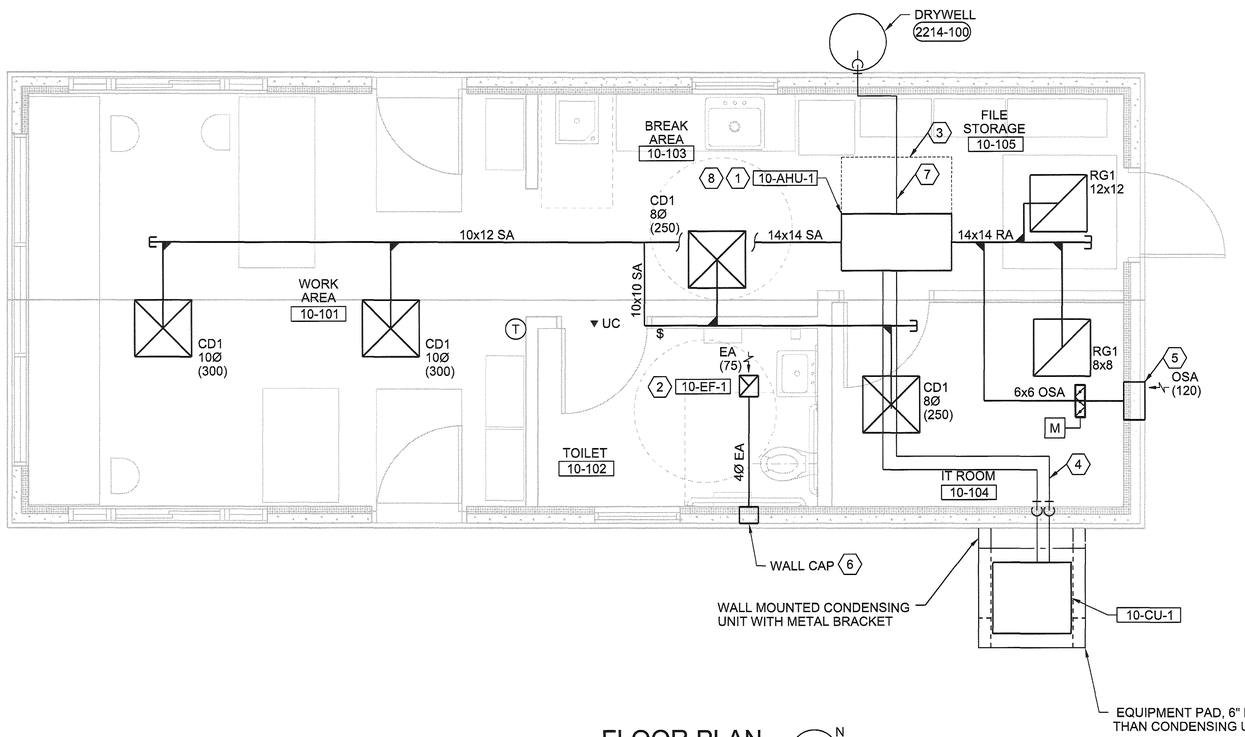

FLOOR PLAN

3/8"=1'-0"

N

0 4 8 12

Scale In Feet

RECORD DRAWINGS

Revisions Drawn By D WELLS Date JULY 2012

THESE RECORD DRAWINGS HAVE BEEN PREPARED, IN PART, ON THE BASIS OF INFORMATION COMPILED BY OTHERS. THEY ARE NOT INTENDED TO REPRESENT IN DETAIL THE EXACT LOCATION, TYPE OF COMPONENT NOR MANNER OF CONSTRUCTION. THE ENGINEER WILL NOT BE RESPONSIBLE FOR ANY ERRORS OR OMISSIONS WHICH HAVE BEEN INCORPORATED INTO THE RECORD DRAWINGS. CASSANDRA JO ANDERSON, PE 68461 IS THE ENGINEER OF RECORD FOR THE DESIGN AND CONSTRUCTION OF THIS PROJECT.

MARIE VALVERDE PEREZ LICENSE No.69124 STATE OF FLORIDA PROFESSIONAL ENGINEER

NO.	DATE	REVISION	DR	CHK	BY
DSGN	C ANDERSON		Y FITZGERALD	G SMARR	APVD
				APVD	A.PEREZ

© CH2M HILL 2010. ALL RIGHTS RESERVED.
THIS DOCUMENT, AND THE IDEAS AND DESIGNS INCORPORATED HEREIN, AS AN INSTRUMENT OF PROFESSIONAL SERVICE, IS THE PROPERTY OF CH2M HILL AND IS NOT TO BE USED, IN WHOLE OR IN PART, FOR ANY OTHER PROJECT WITHOUT THE WRITTEN AUTHORIZATION OF CH2MHILL.
REUSE OF DOCUMENTS:

RECORD DRAWINGS FOR PERMIT

3011 SW WILLISTON RD
GAINESVILLE, FLORIDA 32608
EB0000072 AAC001992
CASSANDRA JO ANDERSON PE 68461

CH2MHILL

SOLID WASTE SYSTEM
UPGRADE DESIGN
PASCO COUNTY
PASCO COUNTY, FLORIDA

MECHANICAL
WEST PASCO SITE
SCALEHOUSE PLAN

VERIFY SCALE

BAR IS ONE INCH ON ORIGINAL DRAWING.
0 1"

DATE	AUGUST 2012
PROJ	378217
DWG	10-M-101
SHEET	

SPLIT SYSTEM DX INDOOR UNITS

23 81 00.01

TAG	LOCATION	FAN DATA			DX COOLING DATA					ELECTRIC HEATING DATA			FAN MOTOR DATA			UNIT ELECTRICAL DATA					UNIT DIMENSIONS				MANUFACTURER	MODEL	APPLICABLE REMARKS
		SUPPLY AIR CFM	OUTSIDE AIR CFM	EXTERNAL STATIC P IN W.G.	NET CAPACITY BTU/H	NET SENS. BTU/H	EAT DEG. F DB	EAT DEG. F WB	AMBIENT TEMP. DEG. F	NET CAPACITY KW	EAT DEG. F DB	STEPS	HP	VOLT	PH	#CONN.	MCA A	MOCP (FUSE)	VOLT	PH	INCHES L	INCHES W	INCHES H	MAX WEIGHT LBS			
10-AHU-1	WEST PASCO SITE SCALE HOUSE	1100	120	0.3	29,000	18,800	78	67	95	3.6	67	1	1/3	208	1	1	24	25	208	1	46.5	24	24	135	TRANE	4TEC3F30	A THRU E

REMARKS:

A: DISCONNECT BY DIV 26 ELECTRICAL
B: FACTORY INSTALLED MOTOR CONTACTOR/STARTER
C: FACTORY INSTALLED HEATER CONTACTOR
D: HORIZONTAL CONFIGURATION
E: 7-DAY PROGRAMMABLE THERMOSTAT WITH LCD DISPLAY

SPLIT SYSTEM DX OUTDOOR UNITS

23 81 00.03

TAG	LOCATION	DX COOLING DATA			OUTDOOR FAN DATA				COMPRESSOR DATA				UNIT ELECTRICAL DATA					UNIT DIMENSIONS				MANUFACTURER	MODEL	APPLICABLE REMARKS
		CAPACITY BTU/HR.	AMBIENT TEMP. DEG. F	SEER @ ARI	NO.	H.P. (EA)	VOLT	PH	NO.	STEPS	RLA (EA.)	LRA (EA.)	# CONN	MCA	MOCP (FUSE)	VOLT	PH	INCHES L	INCHES W	INCHES H	MAX. WEIGHT LBS			
10-CU-1	WEST PASCO SITE SCALE HOUSE	29,000	95	11.0	1	1/8	208	3	1	1	7.4	54.9	1	10.0	15.0	208	3	30	33	38	200	TRANE	4TTA3030A3	A THRU C

REMARKS:

A: DISCONNECT BY DIV 26 ELECTRICAL
B: FACTORY INSTALLED MOTOR CONTACTOR / STARTER
C: DIP APPLIED ANTI-CORROSION COATING ON CONDENSER COIL (NOT SPRAY APPLIED)

FANS

23 34 00.01

TAG	LOCATION	SERVICE	TYPE	FAN DATA							SOUND DATA								ELECTRICAL DATA					MAXIMUM DIMENSIONS				MANUFACTURER	MODEL NO.	APPLICABLE REMARKS
				AIRFLOW		SPEED	DRIVE	WHEEL		MAXIMUM	MAX. FAN SOUND POWER LEVEL dB (RE 10^{-12} W) @ MID OCTAVE BAND FREQUENCY (Hz)								MOTOR					PHYSICAL SIZE INCHES			WEIGHT			
				CFM	@ SP IN. WG.	RPM	TYPE	TYPE	MIN DIA INCH	BHP	63	125	250	500	1K	2K	4K	8K	HP	RPM	ENCLOSURE	VOLT	PH	L	W	H	LBS.			
10-EF-1	WEST PASCO SITE SCALE HOUSE	RESTROOM EXHAUST	CABINET CENTRIFUGAL	75	0.2	1209	DIRECT	FC	5.44	0.05	42	54	55	54	52	47	41	32	1/15	1280	ODP	120	1	8	9	6	100	AEROVENT	T80	A THRU F

REMARKS:

A: FACTORY PROVIDED DISCONNECT AND MOTOR STARTER
B: ROOF CAP WITH BIRDSCREEN, AEROVENT MODEL 611 OR EQUAL
C: CEILING GRILLE
D: FAN SWITCH TIME CONTROL SWITCH WITH "CONTINUOUS ON" OPTION
E: CORROSION PROTECTION COATING: AIR DRY EPOXY
F: FACTORY PROVIDED VIBRATION ISOLATORS

ABBREVIATIONS:

FC: FORWARD CURVED
BI: BACKWARD INCLINED
AF: AIR FOIL

RECORD DRAWINGS

Revisions Drawn By D WELLS Date JULY 2012

THESE RECORD DRAWINGS HAVE BEEN PREPARED, IN PART, ON THE BASIS OF INFORMATION COMPILED BY OTHERS. THEY ARE NOT INTENDED TO REPRESENT IN DETAIL THE EXACT LOCATION, TYPE OF COMPONENT NOR MANNER OF CONSTRUCTION. THE ENGINEER WILL NOT BE RESPONSIBLE FOR ANY ERRORS OR OMISSIONS WHICH HAVE BEEN INCORPORATED INTO THE RECORD DRAWINGS. CASSANDRA JO ANDERSON, PE 68461 IS THE ENGINEER OF RECORD FOR THE DESIGN AND CONSTRUCTION OF THIS PROJECT.

3011 SW WILLISTON RD
GAINESVILLE, FLORIDA 32608
EB0000072 AAC001992
CASSANDRA JO ANDERSON PE 68461

CH2MHILL

SOLID WASTE SYSTEM
UPGRADE DESIGN
PASCO COUNTY
PASCO COUNTY, FLORIDA

MECHANICAL
WEST PASCO SITE
SCALEHOUSE
EQUIPMENT SCHEDULES

VERIFY SCALE
BAR IS ONE INCH ON ORIGINAL DRAWING. 0 1"

DATE AUGUST 2012
PROJ 378217
DWG 10-M-601
SHEET

REVISION | BY | APVD
DR Y FITZGERALD | CHK G SMARR | APVD C ANDERSON
NO. | DATE | DSGN C ANDERSON

©CH2M HILL 2010. ALL RIGHTS RESERVED.
REUSE OF DOCUMENTS: THIS DOCUMENT, AND THE IDEAS AND DESIGNS INCORPORATED HEREIN, AS AN INSTRUMENT OF PROFESSIONAL SERVICE, IS THE PROPERTY OF CH2M HILL AND IS NOT TO BE USED, IN WHOLE OR IN PART, FOR ANY OTHER PROJECT WITHOUT THE WRITTEN AUTHORIZATION OF CH2MHILL.

RECORD DRAWINGS FOR PERMIT

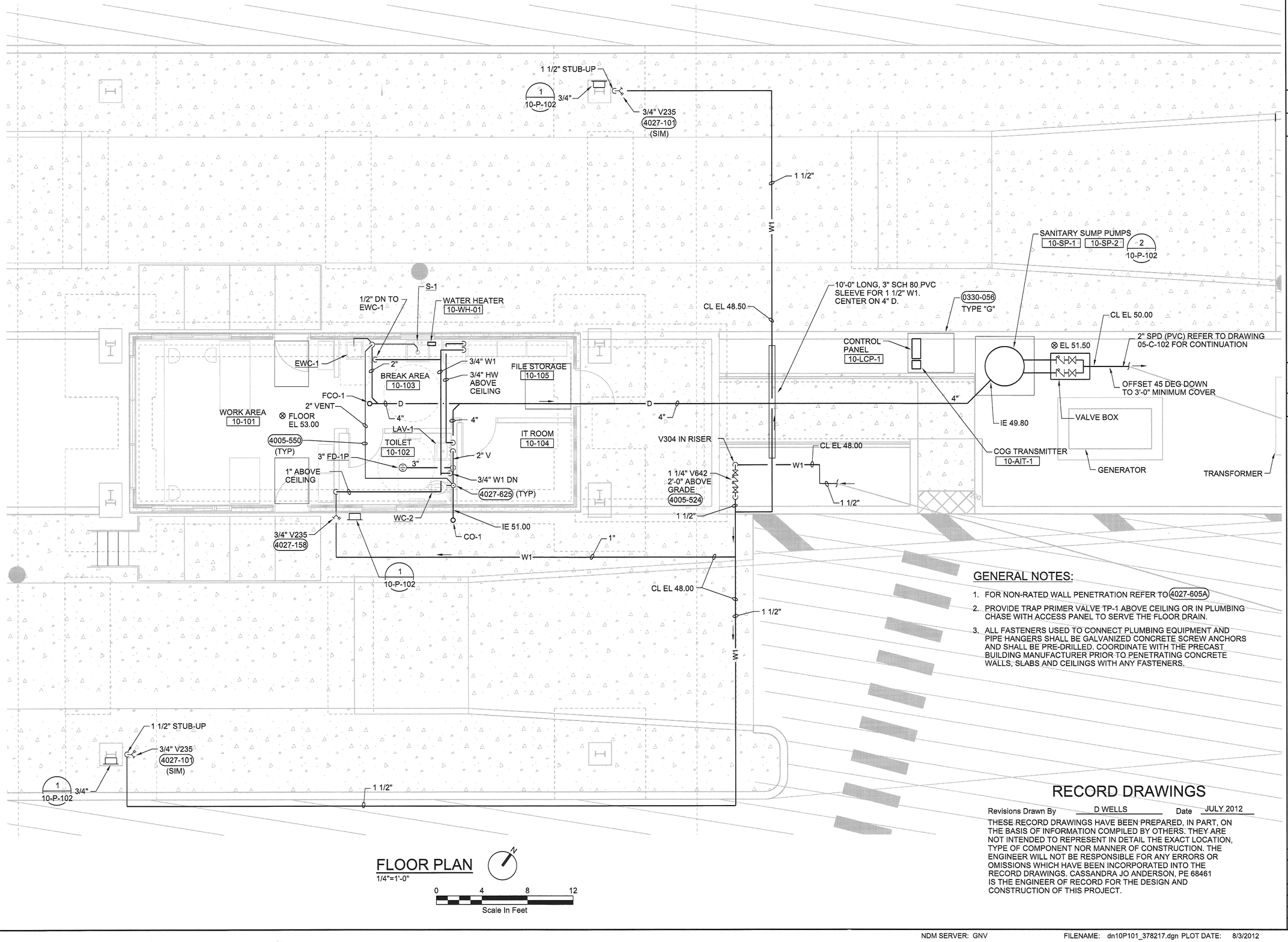

GENERAL NOTES:

1. FOR NON-RATED WALL PENETRATION REFER TO 4027-605A
2. PROVIDE TRAP PRIMER VALVE TP-1 ABOVE CEILING OR IN PLUMBING CHASE WITH ACCESS PANEL TO SERVE THE FLOOR DRAIN.
3. ALL FASTENERS USED TO CONNECT PLUMBING EQUIPMENT AND PIPE HANGERS SHALL BE GALVANIZED CONCRETE SCREW ANCHORS AND SHALL BE PRE-DRILLED. COORDINATE WITH THE PRECAST BUILDING MANUFACTURER PRIOR TO PENETRATING CONCRETE WALLS, SLABS AND CEILINGS WITH ANY FASTENERS.

RECORD DRAWINGS

Revisions Drawn By D WELLS Date JULY 2012

THESE RECORD DRAWINGS HAVE BEEN PREPARED, IN PART, ON THE BASIS OF INFORMATION COMPILED BY OTHERS. THEY ARE NOT INTENDED TO REPRESENT IN DETAIL THE EXACT LOCATION, TYPE OF COMPONENT NOR MANNER OF CONSTRUCTION. THE ENGINEER WILL NOT BE RESPONSIBLE FOR ANY ERRORS OR OMISSIONS WHICH HAVE BEEN INCORPORATED INTO THE RECORD DRAWINGS. CASSANDRA JO ANDERSON, PE 68461 IS THE ENGINEER OF RECORD FOR THE DESIGN AND CONSTRUCTION OF THIS PROJECT.

FLOOR PLAN

1/4"=1'-0"

0 4 8 12
Scale In Feet

©CH2M HILL 2010. ALL RIGHTS RESERVED.

NO.	DSGN	DATE	DR	CHK	APVD	BY	REVISION
			R BURNS	G SMARR	APVD	C ANDERSON	

3011 SW WILLISTON RD
GAINESVILLE, FLORIDA 32608
EB0000072 AAC001992
CASSANDRA JO ANDERSON PE 68461

CH2MHILL

SOLID WASTE SYSTEM
UPGRADE DESIGN
PASCO COUNTY
PASCO COUNTY, FLORIDA

PLUMBING
WEST PASCO SITE
SCALEHOUSE
FLOOR PLAN

REUSE OF DOCUMENTS: THIS DOCUMENT, AND THE IDEAS AND DESIGNS INCORPORATED HEREIN, AS AN INSTRUMENT OF PROFESSIONAL SERVICE, IS THE PROPERTY OF CH2M HILL AND IS NOT TO BE USED, IN WHOLE OR IN PART, FOR ANY OTHER PROJECT WITHOUT THE WRITTEN AUTHORIZATION OF CH2MHILL.

RECORD DRAWINGS FOR PERMIT

VERIFY SCALE

BAR IS ONE INCH ON ORIGINAL DRAWING.
0 1"

DATE	AUGUST 2012
PROJ	378217
DWG	10-P-101
SHEET	

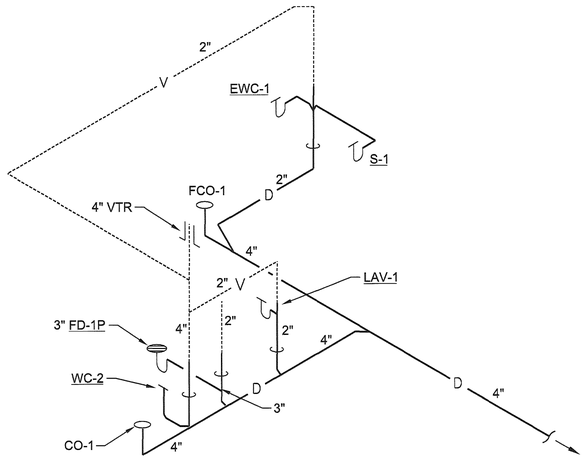

SANITARY RISER DIAGRAM
NTS

PLUMBING FIXTURE SCHEDULE (WEST)						
ITEM	DESCRIPTION	D	V	W1	HW	COMMENTS
WC-2	WATER CLOSET - FLOOR MOUNTED	4"	-	1"	-	FLUSH TANK ADA COMPLIANT
LAV-1	LAVATORY	1 1/2"	1 1/2"	1/2"	1/2"	ADA COMPLIANT
EWC-1	ELECTRIC WATER COOLER	1 1/2"	1 1/2"	1/2"	-	ADA COMPLIANT
S-1	SINK	1 1/2"	1 1/2"	1/2"	1/2"	BREAK AREA

NOTE:

1. COORDINATE SUMP ELEVATIONS WITH DRAIN PIPING FROM THE SCALEHOUSE.
2. * INDICATES EQUIPMENT FURNISHED WITH THE SUMP PUMP PACKAGE SYSTEM.
3. GASKET SEALED ALUMINUM HATCH WITH LOCKING HASP.

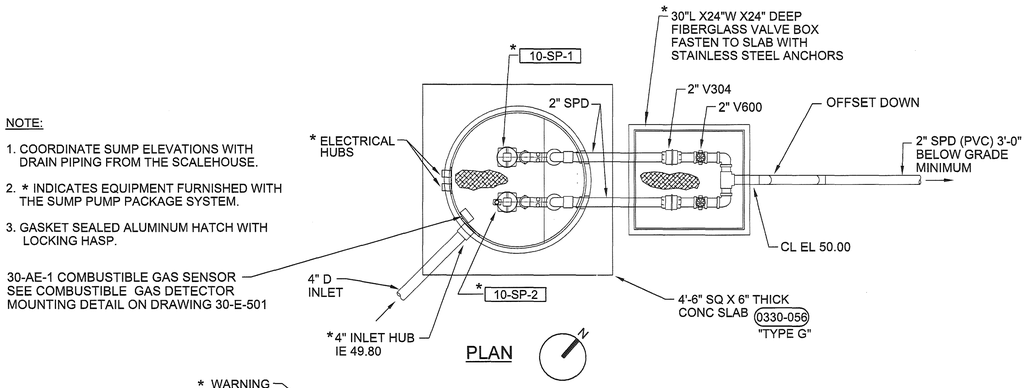

PLAN

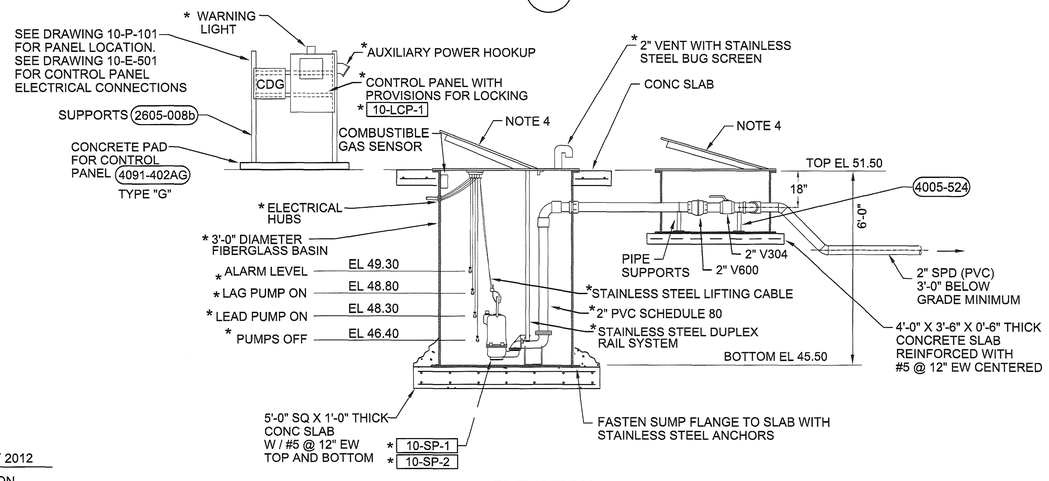

ELEVATION

2 SANITARY SUMP PUMP
NTS

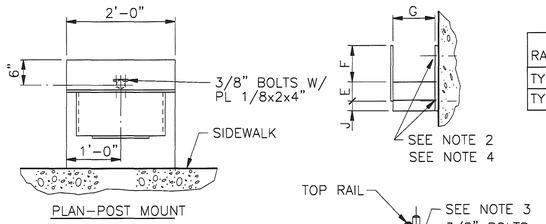

RACK TYPE	DIMENSION IN INCHES								
	A	B	C	D	E	F	G	H	J
TYPE A–3/4" & 1" HOSE	10–1/2	9	9	18	3	6	7–1/2	9–3/4	1–1/2
TYPE B–1 1/2" HOSE	14	12	12	24	4	8	10	13	2

NOTES:

1. INTERIOR AND EXTERIOR UNITS SHALL BE FABRICATED FROM 3/16" 6061–T6 ALUMINUM ALLOY PLATE.
2. ATTACH TO CONCRETE WALL WITH (4) – 3/8" STAINLESS STEEL STUD TYPE WEDGE ANCHORS.
3. ATTACH TO VERTICAL HANDRAIL OR INDIVIDUAL POST WITH PLATES AND (4)– 3/8" STAINLESS STEEL BOLTS.
4. ATTACH TO STEEL COLUMN WITH (4)– 3/8" ROUND HEAD BOLTS, ONE IN EACH CORNER. INSERT DOUBLE SPACER NUTS BETWEEN COLUMN AND HOSE RACK.

1 HOSE RACK DETAIL
NTS

RECORD DRAWINGS

Revisions Drawn By D WELLS Date JULY 2012

THESE RECORD DRAWINGS HAVE BEEN PREPARED, IN PART, ON THE BASIS OF INFORMATION COMPILED BY OTHERS. THEY ARE NOT INTENDED TO REPRESENT IN DETAIL THE EXACT LOCATION, TYPE OF COMPONENT NOR MANNER OF CONSTRUCTION. THE ENGINEER WILL NOT BE RESPONSIBLE FOR ANY ERRORS OR OMISSIONS WHICH HAVE BEEN INCORPORATED INTO THE RECORD DRAWINGS. CASSANDRA JO ANDERSON, PE 68461 IS THE ENGINEER OF RECORD FOR THE DESIGN AND CONSTRUCTION OF THIS PROJECT.

©CH2M HILL 2010. ALL RIGHTS RESERVED.
REUSE OF DOCUMENTS: THIS DOCUMENT, AND THE IDEAS AND DESIGNS INCORPORATED HEREIN, AS AN INSTRUMENT OF PROFESSIONAL SERVICE, IS THE PROPERTY OF CH2M HILL AND IS NOT TO BE USED, IN WHOLE OR IN PART, FOR ANY OTHER PROJECT WITHOUT THE WRITTEN AUTHORIZATION OF CH2MHILL.

NO.	DATE	REVISION	BY	APVD
DSGN	R BURNS	R BURNS	CHK	G SMARR
DR	R BURNS		APVD	C ANDERSON

CH2MHILL
3011 SW WILLISTON RD.
GAINESVILLE, FLORIDA 32608
EB0000072 AAC001992
CASSANDRA JO ANDERSON PE 68461

SOLID WASTE SYSTEM
UPGRADE DESIGN
PASCO COUNTY
PASCO COUNTY, FLORIDA

PLUMBING
WEST PASCO SITE
SCALEHOUSE
RISER AND DETAILS

VERIFY SCALE
BAR IS ONE INCH ON ORIGINAL DRAWING. 0 1"

DATE	AUGUST 2012
PROJ	378217
DWG	10-P-102
SHEET	

RECORD DRAWINGS FOR PERMIT

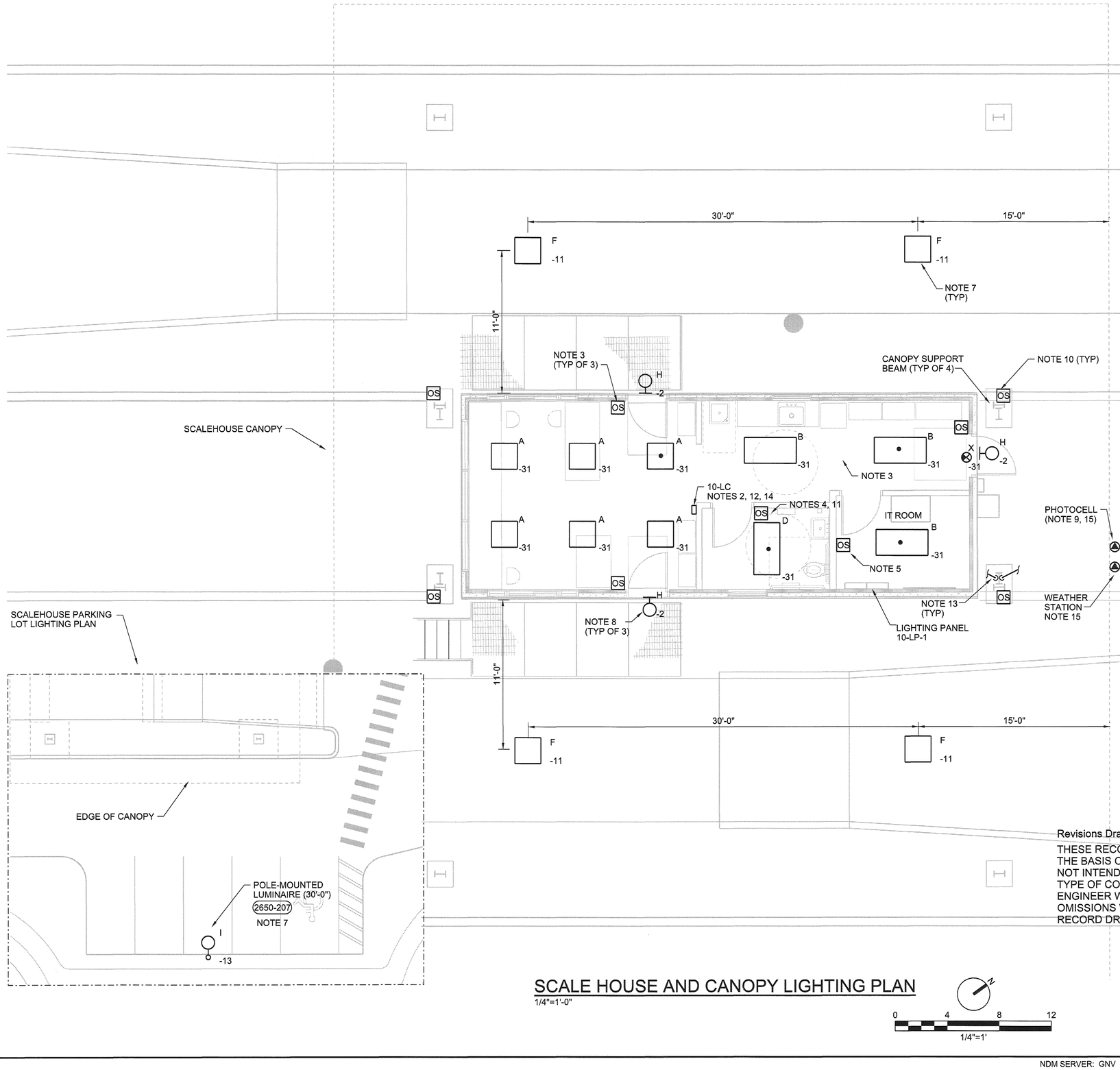

SCALE HOUSE AND CANOPY LIGHTING PLAN

1/4"=1'-0"

0 4 8 12

1/4"=1'

NOTES:

1. THE CONTRACTOR SHALL BE RESPONSIBLE FOR PROVIDING A FULLY FUNCTIONAL OCCUPANCY SENSOR CONTROLLED LIGHTING SYSTEM AS SHOWN. COORDINATE WITH OWNER TO DETERMINE SENSOR TIMER SETTINGS, POSITION, RANGE, AMBIENT LIGHT AND ANY OTHER REQUIRED ADJUSTMENTS NECESSARY TO ACHIEVE THE SYSTEM PERFORMANCE AS APPROVED BY OWNER.
2. COORDINATE PHOTO-SENSOR AND TIMER SETTINGS WITH WITH OWNER.
3. PROVIDE WALL-MOUNTED PASSIVE INFRA-RED/ULTRASONIC OCCUPANCY SENSOR, WATTSTOPPER MODEL DW-205-W. MOUNT 4'-0" ABOVE MULTI-WAY FINISHED FLOOR.
4. PROVIDE WALL-MOUNTED PASSIVE INFRA-RED OCCUPANCY SENSOR, WATTSTOPPER MODEL WS-250-W. MOUNT 4'-0" ABOVE FINISHED FLOOR.
5. PROVIDE WALL-MOUNTED PASSIVE INFRA-RED/ULTRASONIC OCCUPANCY SENSOR, WATTSTOPPER MODEL DS-100-W. MOUNT 4'-0" ABOVE FINISHED FLOOR.
6. CIRCUITS SHOWN ORIGINATE FROM PANEL 10-LP-1 UNLESS OTHERWISE NOTED.
7. TYPE F UNDER CANOPY LUMINAIRE AND TYPE I POLE MOUNTED LUMINAIRE SHALL BE PHOTOCELL AND TIME CLOCK CONTROLLED VIA LIGHTING CONTACTOR 10-LC. TYPE H BUILDING EXTERIOR LUMINAIRES SHALL BE OCCUPANCY SENSOR AND PHOTOCELL CONTROLLED VIA LIGHTING CONTACTOR 10-LC.
8. MOUNT BUILDING EXTERIOR LIGHTS WITH BOTTOM 6" ABOVE DOORWAY.
9. PHOTOCELL SHALL FACE THE NORTH.
10. PROVIDE AND INSTALL EXTERIOR PASSIVE INFRA-RED OCCUPANCY SENSOR, WATTSTOPPER MODEL EW-200 ON CANOPY SUPPORT BEAMS, AS SHOWN. WIRE IN PARALLEL SUCH THAT TRIPPING ANY ONE SENSOR TURNS ON ALL BUILDING EXTERIOR TYPE H LUMINAIRES. REFER TO SHEET 10-E-501 FOR 10LC CONTROL WIRING DIAGRAM. MOUNT 10'-0" AFF BELOW CANOPY. OCCUPANCY SENSOR SHALL BE UL-LISTED FOR OUTDOOR USE. CONTRACTOR SHALL PROVIDE, INSTALL AND CALIBRATE EXTRA OCCUPANCY SENSORS AS NEEDED TO ACHIEVE DESIRED SYSTEM PERFORMANCE. SEE NOTE 1.
11. EXHAUST FAN 10-EF-1 TO BE CONTROLLED FROM THIS OCCUPANCY SENSOR. SEE SHEET 10-E-102.
12. PLACE WARNING SIGN, PER MISCELLANEOUS SIGNAGE DETAIL ON SHEET 10-E-501, ON LIGHTING CONTACTOR 10-LC.
13. ROUTE CONDUIT BETWEEN THE CANOPY ROOF AND SOFFIT FROM PHOTOCELL, WEATHER STATION, UNDER-CANOPY LUMINAIRES, CAMERAS, AND ANY OTHER CANOPY-MOUNTED ELECTRICAL EQUIPMENT, TO CANOPY SUPPORT I-BEAMS. ROUTE CONDUIT DOWN I-BEAM CHANNEL, AND ROUTE UNDERGROUND TO ASSOCIATED EQUIPMENT INSIDE THE SCALEHOUSE. REFER TO SHEET 10-E-602 FOR RISER DIAGRAMS. REFER TO CANOPY-MOUNTED EQUIPMENT CONDUIT ROUTING DETAIL, SHEET 10-E-501, FOR MORE INFORMATION.
14. REFER TO DRAWING 10-E-501 FOR LIGHTING CONTACTOR 10LC CONTROL WIRING DIAGRAM.
15. MOUNT PHOTOCELL OUTSIDE OF CANOPY PARAPET WALL. MOUNT WEATHER STATION TO SIDE OF CANOPY PARAPET.
16. EMERGENCY LIGHTING AND EXIT SIGNS SHALL BE WIRED TO THE NORMAL LIGHTING CIRCUIT OF THE ROOM IT SERVES AND TO THE LINE SIDE OF THE LIGHT SWITCH OR OCCUPANCY SENSOR.

RECORD DRAWINGS

Revisions Drawn By D WELLS Date 7/16/12

THESE RECORD DRAWINGS HAVE BEEN PREPARED, IN PART, ON THE BASIS OF INFORMATION COMPILED BY OTHERS. THEY ARE NOT INTENDED TO REPRESENT IN DETAIL THE EXACT LOCATION, TYPE OF COMPONENT NOR MANNER OF CONSTRUCTION. THE ENGINEER WILL NOT BE RESPONSIBLE FOR ANY ERRORS OR OMISSIONS WHICH HAVE BEEN INCORPORATED INTO THE RECORD DRAWINGS.

DAVID C. NICHOLSON LICENSE No 86601 STATE OF FLORIDA PROFESSIONAL ENGINEER

NO.	DATE	DSGN	REVISION	DR	CHK	APVD	BY	APVD
		J LEWIS		D CORY	M GOSLOW			D NICHOLSON

©CH2M HILL 2010. ALL RIGHTS RESERVED.
REUSE OF DOCUMENTS: THIS DOCUMENT, AND THE IDEAS AND DESIGNS INCORPORATED HEREIN, AS AN INSTRUMENT OF PROFESSIONAL SERVICE, IS THE PROPERTY OF CH2M HILL AND IS NOT TO BE USED, IN WHOLE OR IN PART, FOR ANY OTHER PROJECT WITHOUT THE WRITTEN AUTHORIZATION OF CH2MHILL.

CH2MHILL
3011 SW WILLISTON RD
GAINESVILLE, FLORIDA 32608
EB0000072 AAC001992
DAVID C NICHOLSON PE 60201

SOLID WASTE SYSTEM
UPGRADE DESIGN
PASCO COUNTY
PASCO COUNTY, FLORIDA

ELECTRICAL
WEST PASCO SITE
SCALE HOUSE AND CANOPY
LIGHTING PLAN

VERIFY SCALE

BAR IS ONE INCH ON ORIGINAL DRAWING. 0 1"

DATE	AUGUST 2012
PROJ	378217
DWG	10-E-101
SHEET	

RECORD DRAWINGS FOR PERMIT

NOTES:

1. REFER TO SPECIFICATION SECTION 27 10 00, STRUCTURED CABLING SYSTEM, FOR NETWORK CABLING INFRASTRUCTURE REQUIREMENTS. THIS SHALL INCLUDE ALL NETWORK, CLOSED CIRCUIT TELEVISION SYSTEM, FIBER OPTIC AND TELEPHONE CABLING AND EQUIPMENT IN IT ROOM.
2. PROVIDE GFI RECEPTACLES WITH FEED THROUGH CAPABILITY. INSTALL GFI RECEPTACLES FIRST IN THE CIRCUIT SUCH THAT ALL DOWNSTREAM RECEPTACLES WILL BE TAKEN OFF LINE IN THE EVENT OF A GROUND FAULT ON THAT CIRCUIT.
3. SPECIAL DATACOM OUTLET (KVM, ETHERNET AND VOICE, PER 90-D-101). REFER TO SPECIFICATION SECTION 27 10 00 FOR MORE INFORMATION.
4. COORDINATE THE LOCATION OF POWER RECEPTACLES, DATACOM AND ETHERNET RECEPTACLES, CONTROL STATIONS, AND WIT'S WITH THE ARCHITECTURAL MILLWORK AND THE OWNER. REFER TO DETAILS ON DRAWING 10-A-501.
5. COORDINATE EXACT LOCATION WITH OWNER.
6. MOUNT DUPLEX POWER, DATACOM AND ETHERNET RECEPTACLES 18" ABOVE FINISHED FLOOR, RECESSED, UNLESS OTHERWISE INDICATED.
7. RECESS MOUNT RECEPTACLE 4'-0" ABOVE FINISHED FLOOR.
8. RECESS MOUNT RECEPTACLE 6" ABOVE COUNTERTOP.
9. NOT USED.
10. CIRCUITS SHALL ORIGINATE FROM PANEL 10-LP-1, UNLESS OTHERWISE INDICATED.
11. PROVIDE CONNECTION FOR WATER HEATER BENEATH SINK IN CABINET AREA.
12. MOUNT RECEPTACLE FOR MICROWAVE IN THE ABOVE CABINET. REFER TO DETAIL NO. 1 ON SHEET 10-A-201.
13. EXHAUST FAN 10-EF-1 TO BE CONTROLLED VIA LIGHTING CIRCUIT OCCUPANCY SENSOR. SEE DRAWING 10-E-101, NOTE 11.
14. LOCATE EXTERIOR RECEPTACLES 24" ABOVE FINISHED GRADE, AND ENCLOSE IN NEMA 3R, IN-USE ENCLOSURES AND COVERS.
15. CONTRACTOR TO PROVIDE NONFUSED DISCONNECT SWITCHES FOR 10-AHU-1 AND 10-CU-1 AS SHOWN.
16. SEE SHEET 10-E-601 FOR FOR POWER RISER DIAGRAM. PLACE WARNING SIGN PER MISCELLANEOUS SIGNAGE DETAIL ON DRAWING 10-E-501, ON ATS-10-1.
17. REFER TO SHEET 10-E-401 FOR ENLARGED PLAN DRAWING OF IT ROOM SHOWING VITAL DIMENSIONS.
18. PROVIDE AND INSTALL FLOOR-MOUNTED UPS BELOW OPERATOR DESK. REFER TO SHEET 90-D-101 FOR IDENTIFYING DEVICES REQUIRING UPS POWER AT OPERATOR DESK.
19. MOUNT DISCONNECT SWITCH 4'-0" ABOVE FINISHED FLOOR.
20. DUAL SECTION PANELBOARD. COORDINATE MOUNTING WITH ARCHITECTURAL.

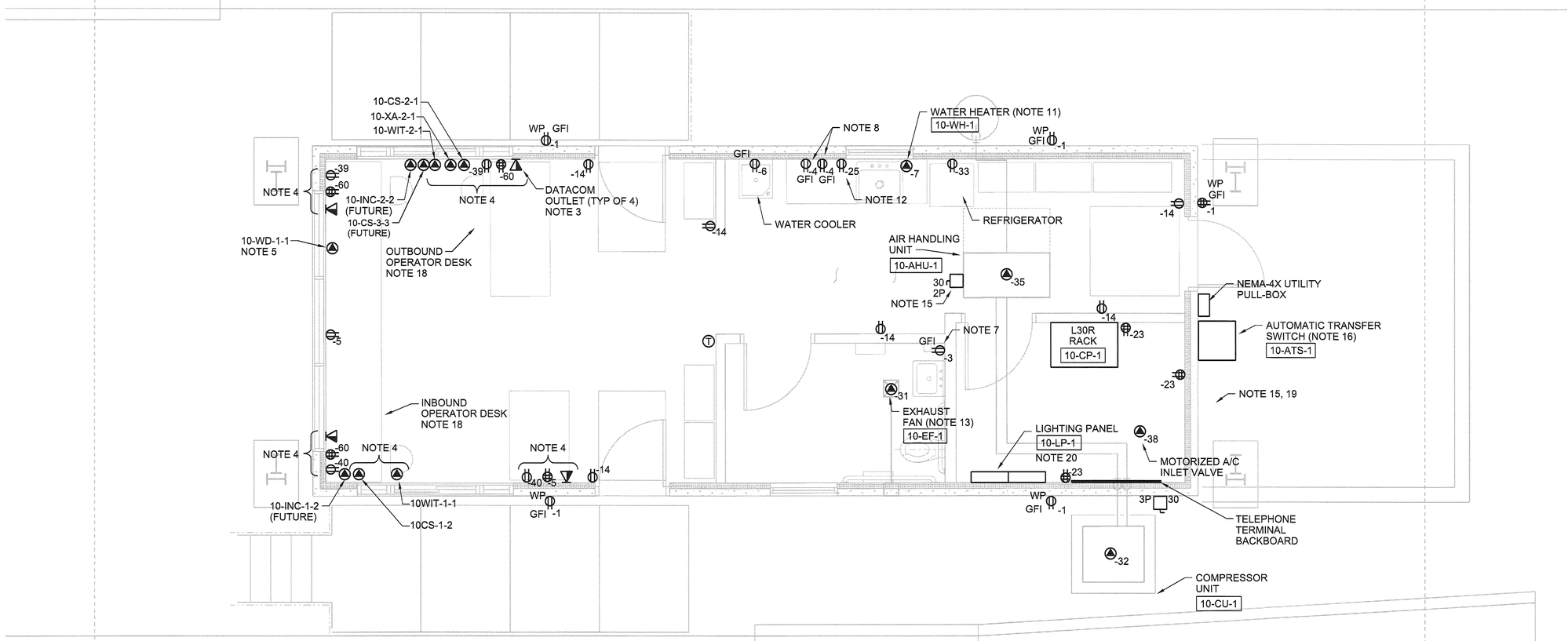

PLAN
3/8"=1'-0"

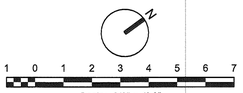

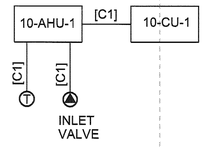

HVAC CONTROL RISER DIAGRAM

RECORD DRAWINGS

Revisions Drawn By D WELLS Date 7/16/12

THESE RECORD DRAWINGS HAVE BEEN PREPARED, IN PART, ON THE BASIS OF INFORMATION COMPILED BY OTHERS. THEY ARE NOT INTENDED TO REPRESENT IN DETAIL THE EXACT LOCATION, TYPE OF COMPONENT NOR MANNER OF CONSTRUCTION. THE ENGINEER WILL NOT BE RESPONSIBLE FOR ANY ERRORS OR OMISSIONS WHICH HAVE BEEN INCORPORATED INTO THE RECORD DRAWINGS.

NO.	DATE	DSGN	REVISION	DR	CHK	APVD	BY	APVD
		J LEWIS		D CORY	M GOSLOW		D NICHOLSON	

©CH2M HILL 2010. ALL RIGHTS RESERVED.
REUSE OF DOCUMENTS: THIS DOCUMENT, AND THE IDEAS AND DESIGNS INCORPORATED HEREIN, AS AN INSTRUMENT OF PROFESSIONAL SERVICE, IS THE PROPERTY OF CH2M HILL AND IS NOT TO BE USED, IN WHOLE OR IN PART, FOR ANY OTHER PROJECT WITHOUT THE WRITTEN AUTHORIZATION OF CH2MHILL.

D. NICHOLSON LICENSE No. 60201 STATE OF FLORIDA PROFESSIONAL ENGINEER

CH2MHILL
3011 SW WILLISTON RD
GAINESVILLE, FLORIDA 32608
EB0000072
AAC001992
DAVID C NICHOLSON PE 60201

SOLID WASTE SYSTEM
UPGRADE DESIGN
PASCO COUNTY
PASCO COUNTY, FLORIDA

ELECTRICAL
WEST PASCO SITE
SCALEHOUSE POWER, NETWORK, TELEPHONE PLAN

VERIFY SCALE
BAR IS ONE INCH ON ORIGINAL DRAWING.
0 1"

DATE	AUGUST 2012
PROJ	378217
DWG	10-E-102
SHEET	

RECORD DRAWINGS FOR PERMIT

NDM SERVER: GNV FILENAME: dn10E102_378217.dgn PLOT DATE: 8/3/2012 PLOT TIME: 11:18:17 AM

NOTES:

1. LOCATIONS FOR SCALE AND TRAFFIC CONTROL EQUIPMENT, AS INDICATED BY THE CONNECTION POINTS SHOWN, ARE APPROXIMATE. COORDINATE ACTUAL LOCATIONS WITH OWNER AND SCALE INSTALLER PRIOR TO CONSTRUCTION. REFER TO SHEET 10-E-602 FOR RISER DIAGRAMS FOR ALL INSTRUMENTS SHOWN ON THIS SHEET.
2. STUB UP AND CAP CONDUIT 3 INCHES ABOVE SCALE FOUNDATION FOR LANE STATUS LIGHTS, INTERCOM, GATE CONTROL PANELS AND SCOREBOARD LOCATED ON SCALE FOUNDATION. RUN CONDUIT FROM SAID EQUIPMENT LOCATIONS, VIA DIRECT BURIED CONDUIT TO THE ASSOCIATED EQUIPMENT INSIDE THE SCALEHOUSE.
3. SCALE INSTALLER TO INSTALL TRAFFIC AND SCALE EQUIPMENT. ELECTRICAL CONTRACTOR RESPONSIBLE FOR INSTALLATION OF CONDUIT ASSOCIATED WITH SAID EQUIPMENT. INSTALL PULL CORDS IN ANY EMPTY CONDUIT.
4. ONLY EXTERIOR SCALE AND TRAFFIC CONTROL EQUIPMENT IS SHOWN. REFER TO SHEET 90-D-101 FOR MORE INFORMATION ON THE OPERATOR DESK EQUIPMENT AND OTHER ASSOCIATED EQUIPMENT LOCATED INSIDE THE SCALEHOUSE.
5. REFER TO SHEET 90-D-102 AND 90-D-103 FOR CAMERA MOUNTING LOCATIONS. SEE SHEET 10-E-602 FOR ASSOCIATED RISER DIAGRAMS.
6. SEE SHEET 10-E-104 FOR SCALE GROUNDING REQUIREMENTS.
7. CONTRACTOR MAY USE A PULLBOX TO COMBINE CIRCUITS INTO A COMMON RACEWAY. SEE SPECIFICATION 26 05 02, BASIC ELECTRICAL REQUIREMENTS FOR MORE INFORMATION. USE SEPARATE PULLBOXES FOR POWER, ANALOG AND DISCRETE SIGNALS.
8. LED MESSAGE DISPLAY TO BE WALL MOUNTED AS SHOWN. SEE EAST ELEVATION DETAIL ON SHEET 10-A-201 FOR ILLUSTRATION. ROUTE CONDUIT CONCEALED FROM IT ROOM TO LED DISPLAY. REFER TO SPECIFICATION SECTION 27 10 00, STRUCTURED CABLING SYSTEM, FOR ROUTING INFORMATION. SEE SHEET 90-D-101 FOR MORE INFORMATION.
9. SANITARY SUMP WET WELL AND THE AREA WITHIN 3 FEET RADIUS AROUND ALL VENTS ARE A CLASS I, DIV I, GROUP D HAZARDOUS LOCATION PER NFPA 820 TABLE 4.2-16-A. PROVIDE SUITABLE WIRING METHODS AND MATERIALS FOR HAZARDOUS LOCATIONS PER NFPA 70 (NEC).
10. THE AREA WITHIN 5 FEET RADIUS AROUND ALL VENTS TO THE SANITARY SUMP WET WELL AND AN AREA 18 INCHES ABOVE AND 10 FEET FROM ALL WET WELL HATCHES ARE CLASS I, DIV 2, GROUP D HAZARDOUS LOCATIONS PER FNPA 820, TABLE 4.2-16.A. PROVIDE SUITABLE WIRING METHOLDS AND MATERIALS FOR HAZARDOUS LOCATION PER NFPA 70 (NEC).
11. LOCATE DAT 8'-0" AND RFID READERS (UU) 27'-0" FROM CENTERLINE OF SCALE TOWARDS FRONT EDGE.
12. CONDUITS ENTER STRUCTURE IN THIS LOCATION

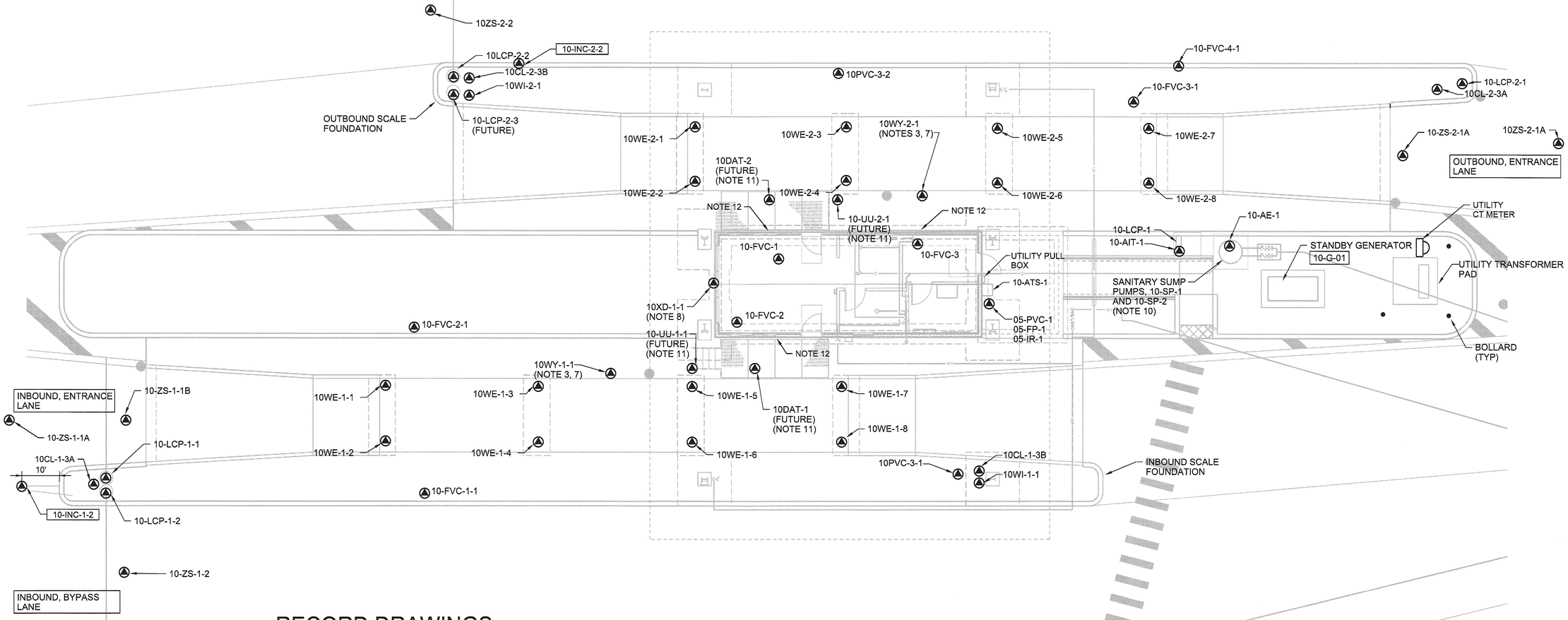

RECORD DRAWINGS

Revisions Drawn By D WELLS Date 7/16/12

THESE RECORD DRAWINGS HAVE BEEN PREPARED, IN PART, ON THE BASIS OF INFORMATION COMPILED BY OTHERS. THEY ARE NOT INTENDED TO REPRESENT IN DETAIL THE EXACT LOCATION, TYPE OF COMPONENT NOR MANNER OF CONSTRUCTION. THE ENGINEER WILL NOT BE RESPONSIBLE FOR ANY ERRORS OR OMISSIONS WHICH HAVE BEEN INCORPORATED INTO THE RECORD DRAWINGS.

INSTRUMENT LEGEND:

CL = LANE STATUS TRAFFIC LIGHT
INC = INTERCOM
LCP = GATE CONTROL PANEL
WE = LOAD CELL
WI = SCOREBOARD
WIT = WEIGHT TRANSMITTER
WY = PIT POWER SUPPLY
XD = LED MESSAGE DISPLAY
ZS = TRAFFIC LOOP DETECTOR

SCALES AND TRAFFIC CONTROLS PLAN

1/8"=1'-0"

0 8 16 24
1/8"=1'-0"

DAVID C. NICHOLSON LICENSE No 60201 STATE OF FLORIDA PROFESSIONAL ENGINEER

NO.	DSGN	DATE	DR	REVISION	CHK	APVD	BY	APVD
			J LEWIS	D CORY	M GOSLOW		D NICHOLSON	

©CH2M HILL 2010. ALL RIGHTS RESERVED.
THIS DOCUMENT, AND THE IDEAS AND DESIGNS INCORPORATED HEREIN, AS AN INSTRUMENT OF PROFESSIONAL SERVICE, IS THE PROPERTY OF CH2M HILL AND IS NOT TO BE USED, IN WHOLE OR IN PART, FOR ANY OTHER PROJECT WITHOUT THE WRITTEN AUTHORIZATION OF CH2MHILL.
REUSE OF DOCUMENTS:

CH2MHILL
3011 SW WILLISTON RD
GAINESVILLE, FLORIDA 32608
EB0000072 AAC001992
DAVID C NICHOLSON PE 60201

SOLID WASTE SYSTEM
UPGRADE DESIGN
PASCO COUNTY
PASCO COUNTY, FLORIDA

ELECTRICAL
WEST PASCO SITE
SCALES AND TRAFFIC CONTROLS PLAN

RECORD DRAWINGS FOR PERMIT

VERIFY SCALE
BAR IS ONE INCH ON ORIGINAL DRAWING. 0 1"

DATE	AUGUST 2012
PROJ	378217
DWG	10-E-103
SHEET	

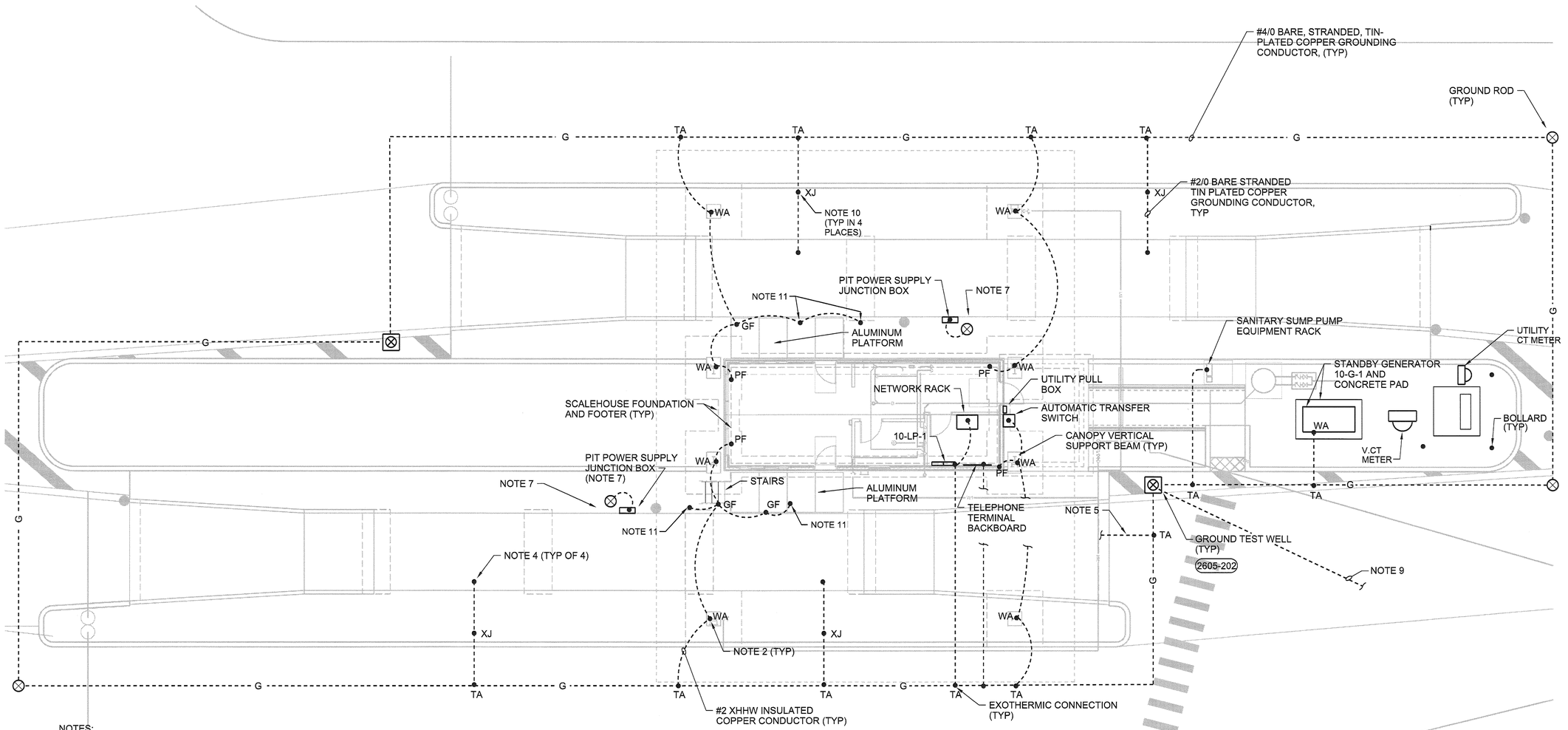

NOTES:

1. PROVIDE A LIGHTNING PROTECTION SYSTEM FOR THE SCALEHOUSE AND SCALEHOUSE CANOPY PER SPECIFICATION SECTION 26 41 00, FACILITY LIGHTING PROTECTION.
2. REFER TO SPECIFICATION SECTION 27 10 00, STRUCTURED CABLING SYSTEM FOR MORE INFORMATION REGARDING GROUNDING AND BONDING OF IT ROOM EQUIPMENT.
3. NOT USED.
4. BOND EACH SCALE WEIGHBRIDGE, IN TWO LOCATIONS AS SHOWN, WITH SCALEHOUSE SITE GROUNDING SYSTEM. COORDINATE WITH SCALE SUPPLIER.
5. PROVIDE GROUNDING CONDUCTOR FOR CANOPY MOUNTED WEATHER STATION. SEE DRAWING 10-E-101 FOR RELATIVE LOCATION.
6. REFER TO SHEET 10-E-401 FOR GENERATOR AND UTILITY TRANSFORMER PAD DIMENSIONAL DATA
7. CONTRACTOR TO INSTALL 3/4"X10'-0" GROUND ROD, PROVIDED BY SCALE MANUFACTURER, A MAXIMUM OF 2'-0" FROM PIT POWER SUPPLY. SEE PIT POWER SUPPLY GROUNDING DETAIL ON SHEET 10-E-501.
8. GROUNDING CONNECTIONS TO GROUND BAR IN IT ROOM SHALL BE DIRECT BURIED, EMBEDDED IN THE CONCRETE SLAB, OR ABOVE FINISHED FLOOR, CONCEALED. USE 3/4" THREADED RIGID GALVANIZED STEEL.
9. ROUTE GROUNDING ELECTRODE CONDUCTOR WITH DUCTBANK AND CONNECT TO HANDHOLES GROUND RODS.
10. CONNECT TO LOWERMOST REBAR IN SLAB, AS SHOWN. REBAR SHALL BE 20'-0" IN LENGTH, MIN. USE STEEL TIES AS NEEDED TO CONNECT MULTIPLE LENGTHS TO MEET 20'-0" REQUIREMENT.
11. PROVIDE #6 TINPLATED BARE COPPER GROUND WIRE FROM GROUND GRID TO 10DAT-1, 10-DAT2, 10-UU-1-1 AND 10-UU-2-1.

SCALE HOUSE GROUNDING PLAN

1/8"=1'-0"

0 8 16 24

1/8"=1'-0"

RECORD DRAWINGS

Revisions Drawn By D WELLS Date 7/16/12

THESE RECORD DRAWINGS HAVE BEEN PREPARED, IN PART, ON THE BASIS OF INFORMATION COMPILED BY OTHERS. THEY ARE NOT INTENDED TO REPRESENT IN DETAIL THE EXACT LOCATION, TYPE OF COMPONENT NOR MANNER OF CONSTRUCTION. THE ENGINEER WILL NOT BE RESPONSIBLE FOR ANY ERRORS OR OMISSIONS WHICH HAVE BEEN INCORPORATED INTO THE RECORD DRAWINGS.

DAVID C. NICHOLSON LICENSE No 60201 STATE OF FLORIDA PROFESSIONAL ENGINEER

NO.	DATE	DSGN	DR	CHK	APVD	REVISION	BY	APVD
			J LEWIS	D CORY	M GOSLOW		D NICHOLSON	

©CH2M HILL 2010. ALL RIGHTS RESERVED.
REUSE OF DOCUMENTS: THIS DOCUMENT AND THE IDEAS AND DESIGNS INCORPORATED HEREIN, AS AN INSTRUMENT OF PROFESSIONAL SERVICE, IS THE PROPERTY OF CH2M HILL AND IS NOT TO BE USED, IN WHOLE OR IN PART, FOR ANY OTHER PROJECT WITHOUT THE WRITTEN AUTHORIZATION OF CH2M HILL.

3011 SW WILLISTON RD
GAINESVILLE, FLORIDA 32608
EB0000072 AAC001992
DAVID C NICHOLSON PE 60201

CH2MHILL

SOLID WASTE SYSTEM
UPGRADE DESIGN
PASCO COUNTY
PASCO COUNTY, FLORIDA

ELECTRICAL
WEST PASCO SITE
SCALE HOUSE GROUNDING PLAN

RECORD DRAWINGS FOR PERMIT

VERIFY SCALE
BAR IS ONE INCH ON ORIGINAL DRAWING. 0 1"

DATE	AUGUST 2012
PROJ	378217
DWG	10-E-104
SHEET	

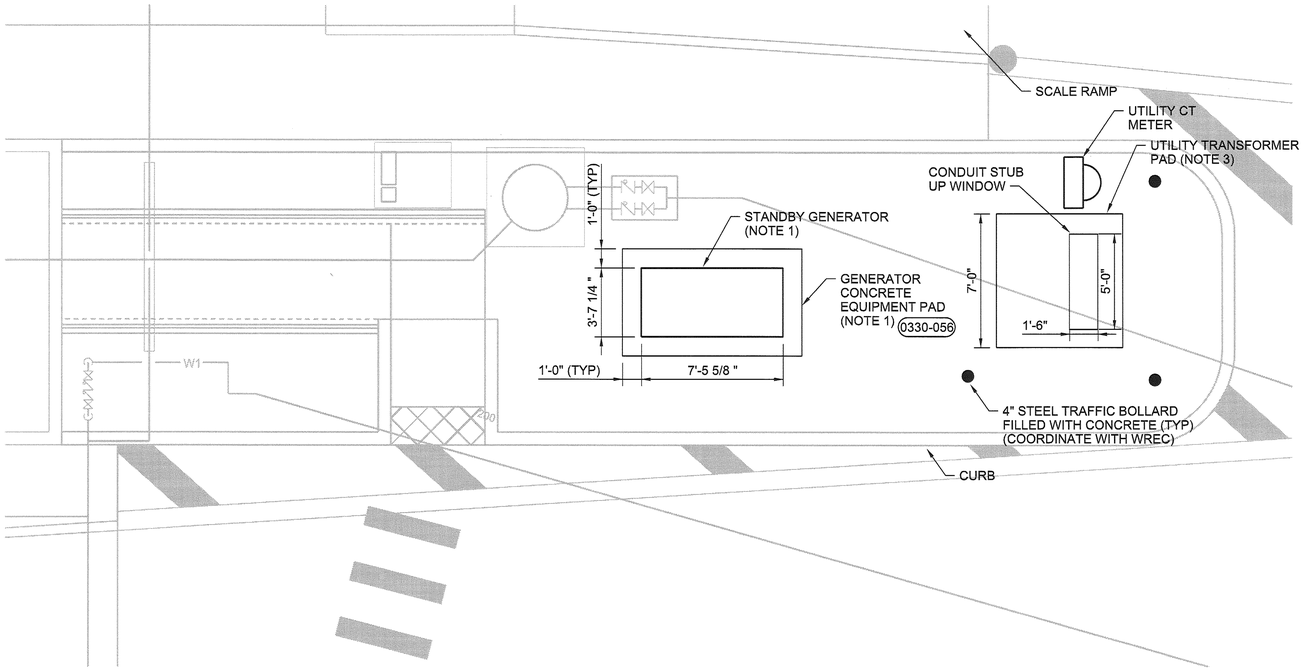

GENERATOR AND UTILITY TRANSFORMER PAD ENLARGED PLAN

1/4"=1'-0"

NOTES:

1. COORDINATE FINAL PAD DIMENSIONS WITH APPROVED MANUFACTURER SHOP DRAWINGS.
2. SIZE CONCRETE PAD SUCH THAT IT EXTENDS 1'-0" BEYOND THE SIDES OF THE GENERATOR ENCLOSURE AS SHOWN. COORDINATE WITH GENERATOR MANUFACTURER TO DETERMINE THE LOCATION AND SIZE OF CONDUIT STUB UP AREA (NOT SHOWN).
3. WREC REQUIRES A MINIMUM OF 12'-0' OF CLEAR SPACE IN FRONT OF, AND A MINIMUM OF 5'-0" OF CLEAR SPACE ON THE SIDES AND AT THE BACK OF THE UTILITY TRANSFORMER PAD. COORDINATE WITH WREC IN ORDER TO DETERMINE THE CORRECT THICKNESS, AND REBAR REQUIREMENTS FOR THE CONCRETE PAD. REFER TO SHEET 05-E-101 FOR MORE WREC REQUIREMENTS REGARDING NEW ELECTRICAL SERVICE.

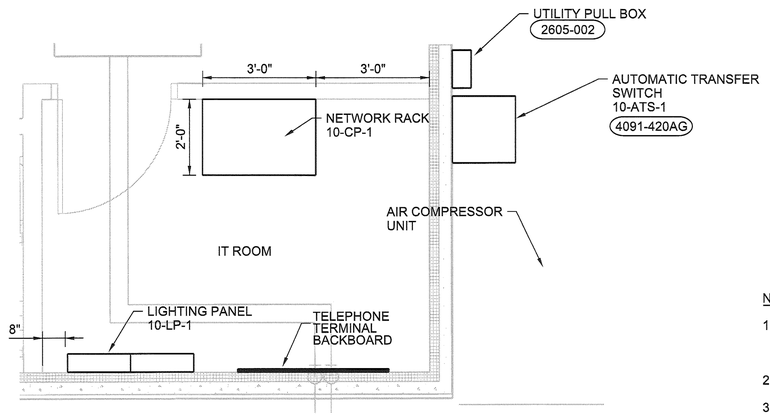

IT ROOM ENLARGED PLAN

1/2"=1'-0"

NOTES:

1. REFER TO SHEET 10-E-102 AND SPECIFICATION SECTION 27 10 00, STRUCTURED CABLING SYSTEM, FOR MORE INFORMATION REGARDING IT ROOM EQUIPMENT CABLING REQUIREMENTS.
2. NOT USED.
3. NEMA 4X 316 STAINLESS STEEL ATS.
4. REFER TO SHEET 10-E-601 FOR SCALEHOUSE POWER RISER DIAGRAM.

RECORD DRAWINGS

Revisions Drawn By D WELLS Date 7/16/12

THESE RECORD DRAWINGS HAVE BEEN PREPARED, IN PART, ON THE BASIS OF INFORMATION COMPILED BY OTHERS. THEY ARE NOT INTENDED TO REPRESENT IN DETAIL THE EXACT LOCATION, TYPE OF COMPONENT NOR MANNER OF CONSTRUCTION. THE ENGINEER WILL NOT BE RESPONSIBLE FOR ANY ERRORS OR OMISSIONS WHICH HAVE BEEN INCORPORATED INTO THE RECORD DRAWINGS.

DAVID C. NICHOLSON LICENSE No. 60201 STATE OF FLORIDA PROFESSIONAL ENGINEER

NO.	DATE	DSGN	DR	CHK	APVD	BY	APVD
		J LEWIS	J LEWIS	M GOSLOW	D NICHOLSON		

REVISION

©CH2M HILL 2010. ALL RIGHTS RESERVED.

3011 SW WILLISTON RD
GAINESVILLE, FLORIDA 32608
EB0000072 AAC001992
DAVID C NICHOLSON PE 60201

SOLID WASTE SYSTEM
UPGRADE DESIGN
PASCO COUNTY
PASCO COUNTY, FLORIDA

CH2MHILL

ELECTRICAL
WEST PASCO SITE
SCALEHOUSE
ENLARGED PLANS

REUSE OF DOCUMENTS: THIS DOCUMENT, AND THE IDEAS AND DESIGNS INCORPORATED HEREIN, AS AN INSTRUMENT OF PROFESSIONAL SERVICE, IS THE PROPERTY OF CH2M HILL AND IS NOT TO BE USED, IN WHOLE OR IN PART, FOR ANY OTHER PROJECT WITHOUT THE WRITTEN AUTHORIZATION OF CH2MHILL.

RECORD DRAWINGS FOR PERMIT

VERIFY SCALE

BAR IS ONE INCH ON ORIGINAL DRAWING. 0 1"

DATE	AUGUST 2012
PROJ	378217
DWG	10-E-401
SHEET	

NDM SERVER: GNV FILENAME: dn10E401_378217.dgn PLOT DATE: 8/3/2012 PLOT TIME: 11:18:32 AM

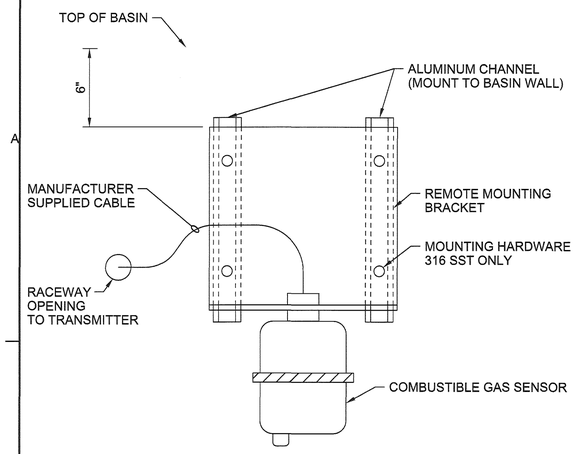

NOTES:

1. CONSULT WITH BASIN MANUFACTURER REGARDING WALL MOUNTED EQUIPMENT.

COMBUSTIBLE GAS DETECTOR MOUNTING DETAIL

NTS

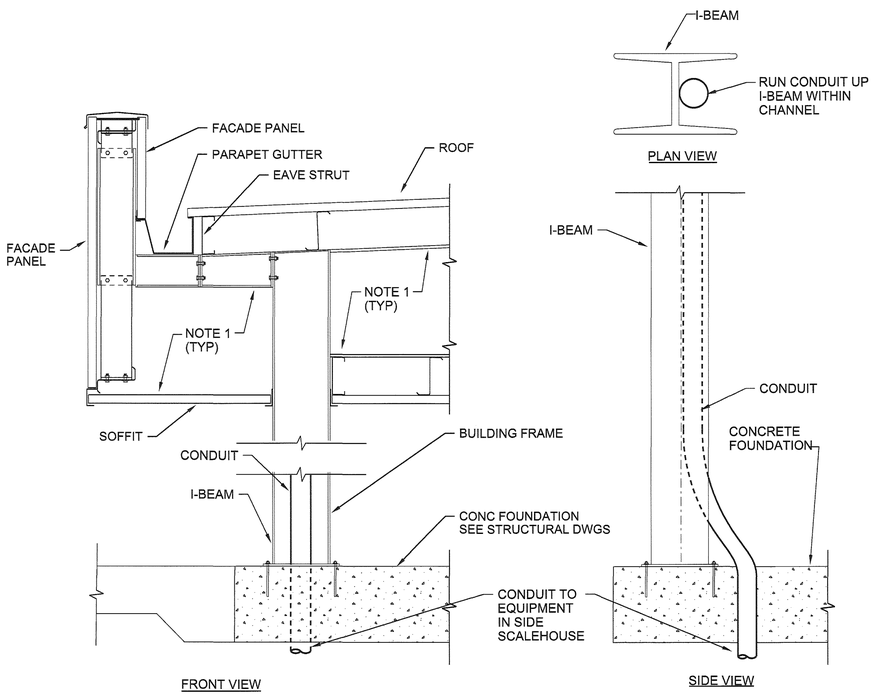

CANOPY CONDUIT ROUTING DETAIL

NTS

NOTE:

1. ROUTE CONDUIT BETWEEN THE CANOPY ROOF AND SOFFIT.

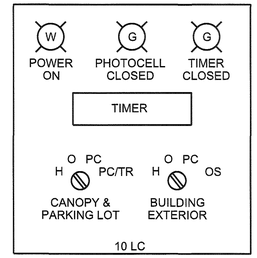

PANEL LAYOUT

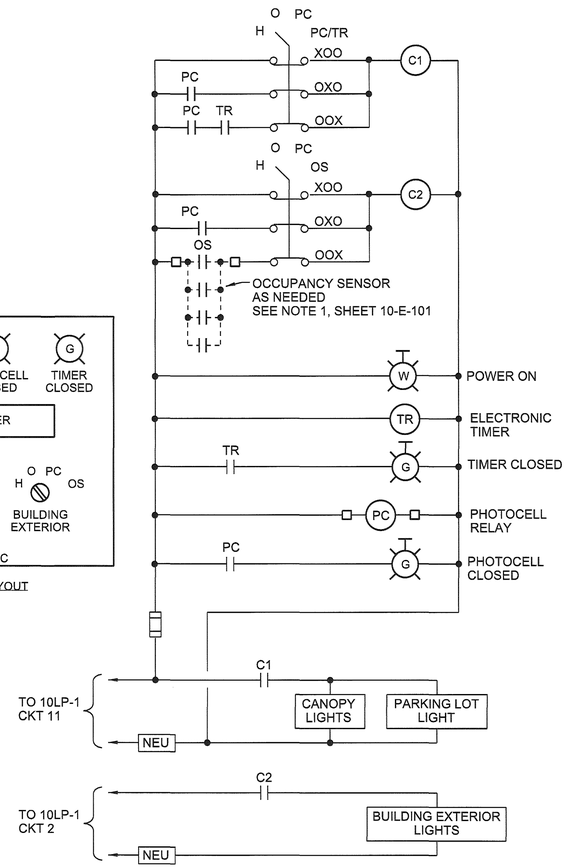

120V EXTERIOR LIGHTING CONTACTOR 10 LC CONTROL DIAGRAM AND PANEL LAYOUT

NTS

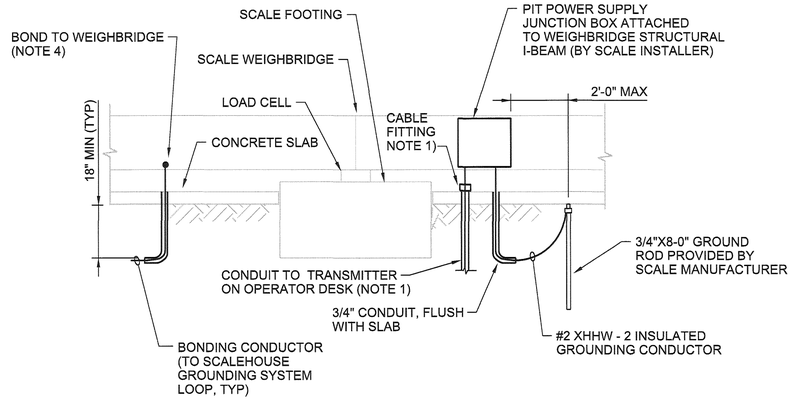

NOTES:

1. PROVIDE WATER/OIL-TIGHT SEAL ON CONDUIT TERMINATION BELOW PIT POWER SUPPLY JUNCTION BOX. USE CROUSE AND HINDS CGB ZINC ELECTROPLATED CABLE FITTING WITH GLAND NUT AND TAPERED NEOPRENE BUSHING, OR EQUIVALENT. COORDINATE INSTALLATION OF FITTING WITH SCALE INSTALLER. DO NOT TAMPER WITH THE OUTER COVERING OF CABLE.
2. COORDINATE LOCATION OF JUNCTION BOX WITH SCALE INSTALLER. INSTALL CONDUIT DIRECTLY IN LINE WITH JUNCTION BOX, AS SHOWN. INSTALL GROUND TEST WELL AS SHOWN.
3. REFER TO RISER ON SHEET 10-E-602 FOR RISER DIAGRAM. REFER TO SHEET 10-E-104 FOR SCALEHOUSE GROUDING PLAN.
4. COORDINATE SCALE GROUNDING WITH SCALE INSTALLER.

PIT POWER SUPPLY JUNCTION BOX AND WEIGHBRIDGE GROUNDING DETAIL

NTS

PLACE ON AUTOMATIC TRANSFER SWITCH 10-ATS-1

WARNING!
POWER TO SCALEHOUSE WILL BE TEMPORARILY INTERRUPTED DURING TRANSFER FROM NORMAL TO STANDBY POWER, AND BACK.

PLACE ON ALL LIGHTING CONTACTORS

WARNING!
THIS CONTROLLER RECEIVES POWER FROM MORE THAN ONE SOURCE. EXERCISE EXTREME CAUTION AND FOLLOW ALL SAFETY PROCEDURES.

MISCELLANEOUS SIGNAGE

NTS

RECORD DRAWINGS

Revisions Drawn By D WELLS Date 7/16/12

THESE RECORD DRAWINGS HAVE BEEN PREPARED, IN PART, ON THE BASIS OF INFORMATION COMPILED BY OTHERS. THEY ARE NOT INTENDED TO REPRESENT IN DETAIL THE EXACT LOCATION, TYPE OF COMPONENT NOR MANNER OF CONSTRUCTION. THE ENGINEER WILL NOT BE RESPONSIBLE FOR ANY ERRORS OR OMISSIONS WHICH HAVE BEEN INCORPORATED INTO THE RECORD DRAWINGS.

DAVID C. NICHOLSON PROFESSIONAL ENGINEER LICENSE No. 60201 STATE OF FLORIDA

NO.	DATE	DSGN
DR	J LEWIS	J LEWIS
CHK	J LEWIS	M GOSLOW
APVD		D NICHOLSON
BY		APVD

REVISION

© CH2M HILL 2010. ALL RIGHTS RESERVED.
THESE DRAWINGS AND DESIGNS INCORPORATED HEREIN, AS AN INSTRUMENT OF PROFESSIONAL SERVICE, IS THE PROPERTY OF CH2M HILL AND IS NOT TO BE USED, IN WHOLE OR IN PART, FOR ANY OTHER PROJECT WITHOUT THE WRITTEN AUTHORIZATION OF CH2M HILL.
REUSE OF DOCUMENTS: THIS DOCUMENT, AND THE IDEAS AND DESIGNS

3011 SW WILLISTON RD.
GAINESVILLE, FLORIDA 32608
EB0000072 AAC001992
DAVID C NICHOLSON PE 60201

SOLID WASTE SYSTEM
UPGRADE DESIGN
PASCO COUNTY
PASCO COUNTY, FLORIDA

CH2MHILL

ELECTRICAL
WEST PASCO SITE
SCALE HOUSE
DETAILS AND SECTIONS

RECORD DRAWINGS FOR PERMIT

VERIFY SCALE
BAR IS ONE INCH ON ORIGINAL DRAWING.
0 1"

DATE	AUGUST 2012
PROJ	378217
DWG	10-E-501
SHEET	

NDM SERVER: GNV FILENAME: dn10E501_378217.dgn PLOT DATE: 8/3/2012 PLOT TIME: 11:18:37 AM

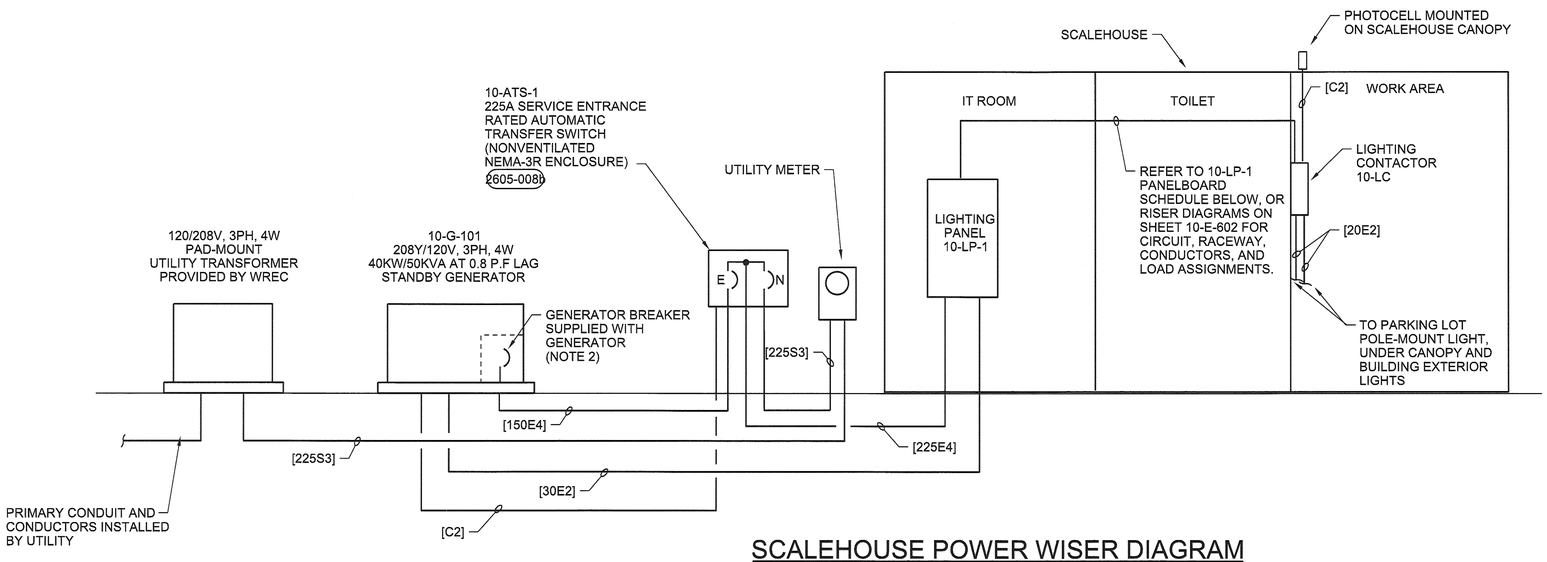

SCALEHOUSE POWER WISER DIAGRAM

NTS

NOTES:

1. REFER TO SHEET 05-E-101 FOR INFORMATION ON WREC STANDARDS FOR PROVIDING NEW ELECTRICAL SERVICE.
2. GENERATOR BREAKER TO BE SIZED TO AS RECOMMENDED BY GENERATOR MANUFACTURER.
3. ALL INTERIOR CONDUIT RUNS SHALL BE CONCEALED OR BELOW SLAB.

LOAD CALCS: WEST PASCO SCALEHOUSE

EQUIPMENT	QTY	KVA EACH	CONN KVA
PANEL 10-LP-1	-	51	51
		TOTAL KVA	51
		SERVICE AMPS	142.8

RECORD DRAWINGS

Revisions Drawn By D WELLS Date 7/16/12

THESE RECORD DRAWINGS HAVE BEEN PREPARED, IN PART, ON THE BASIS OF INFORMATION COMPILED BY OTHERS. THEY ARE NOT INTENDED TO REPRESENT IN DETAIL THE EXACT LOCATION, TYPE OF COMPONENT NOR MANNER OF CONSTRUCTION. THE ENGINEER WILL NOT BE RESPONSIBLE FOR ANY ERRORS OR OMISSIONS WHICH HAVE BEEN INCORPORATED INTO THE RECORD DRAWINGS.

10-LP-1 — Fed From 10-ATS-1 — **PANEL BOARD SCHEDULE** — **10-LP-1**

208 / 120 VOLTS, 225 AMPS, MAIN CB, 3 Phase, 4 Wire, FEEDER = 2-1/2"C, 4#4/0,1#4G, NEMA 1, KAIC = 42

CKT NBR	EQUIPMENT PROTECTED	CKT BKR POLE	CKT BKR TRIP	Nbr Sets	WIRE AND CONDUIT ** Phase	Neu	Grd	Cond	PHASE KVA A	A	B	B	C	C	WIRE AND CONDUIT ** Phase	Neu	Grd	Cond	Nbr Sets	CKT BKR POLE	CKT BKR TRIP	EQUIPMENT PROTECTED	CKT NBR
1	Receptacles-Exterior	1	20						1.0	0.4										1	20	Building Exterior Lights	2
3	Receptacles-Toilet	1	20								0.2	0.4								1	20	Receptacle-Break Room GFI	4
5	Receptacles-Work Area	1	20										1.6	1.5						1	20	Receptacle-Break Room (Cooler)	6
7	Water Heater 10-WH-01	2	50	1	#8	-	#10	3/4"	4.0	2.0										2	40	Generator 10-G-1	8
9											4.0	2.0											10
11	Canopy Lights via 10-LC-1	1	30	1	#10	#10	#10	3/4"					1.8							1	20	Spare	12
13	Parking Lot Light via 10-LC-2	1	20						0.3	0.5										1	20	Receptacles-IT/Break Room	14
15	Site Camera #1 (05-FP-1, 05-IR-1)	1	20					1"			0.3	0.7											16
17	Site Camera #2 (05-FP-2, 05-IR-2)	1	20					1"					0.3	0.7						3	20	Fence Gate Operator (05-LCP-1-1)	18
19	Site Camera #3 (05-FP-3, 05-IR-3)	1	20					1"	0.3	0.7													20
21	Illuminator #4 (05-IR-4)	1	20								0.1	0.2								1	20	Status Lights (10-CL-1-1,2,3,4)	22
23	Receptacles-IT Room	1	20										1.1	0.2						1	20	Status Lights (10-CL-2-1,2,3,4)	24
25	Receptacle-Microwave	1	20						1.0	0.0										1	20	Outbound Scorboard (10-WI-2-1)	26
27	Message Display (10-XD-1-1)	1	20								0.2	2.0								1	20	Network Rack (10-CP-1)	28
29	Inbound Scoreboard (10-WI-1-1)	1	20										0.1							1	20	Spare	30
31	Interior Lights, 10-EF-1	1	20						0.9	1.2													32
33	Receptacle-Break Room (Fridge)	1	20								1.2	1.2								3	20	Compressor Unit (10-CU-1)	34
35	Air Handling Unit	2	30	1	#10	-	#10	3/4"					2.5	1.2									36
37									2.5	0.2										1	20	Motorized A/C Inlet Valve	38
39	Receptacle-10-UPS-1	1	20								1.5	1.5								1	20	Receptacle-10-UPS-2	40
41	Spare	1	20																	1	20	Spare	42
	EQUIPPED WITH FEED-THROUGH LUGS								3.1		2.8		3.7										
	CONNECTED KVA =								18		18		15										
	CONNECTED AMPS =								151		152		122										

** PROVIDE #12 PHASE (QTY=CB POLES) AND GROUND IN 3/4" CONDUIT UNLESS DIFFERENT NUMBER AND/OR GREATER SIZES ARE SHOWN ON PLANS.

10-LP-1 SECTION 2 — Sub-Fed From 10-LP-1 — **PANEL BOARD SCHEDULE** — **10-LP-1 SECTION 2**

208 / 120 VOLTS, 225 AMPS, MAIN LUG, 3 Phase, 4 Wire, FEEDER = 2-1/2"C, 4#4/0,1#4G, NEMA 1, KAIC = 10

CKT NBR	EQUIPMENT PROTECTED	CKT BKR POLE	CKT BKR TRIP	Nbr Sets	WIRE AND CONDUIT ** Phase	Neu	Grd	Cond	PHASE KVA A	A	B	B	C	C	WIRE AND CONDUIT ** Phase	Neu	Grd	Cond	Nbr Sets	CKT BKR POLE	CKT BKR TRIP	EQUIPMENT PROTECTED	CKT NBR
43	Gate Operator 20-LCP-1-1	1	20						0.4														44
45	Gate Operator 20-LCP-1-2	1	20								0.4									3	20	Spare	46
47	Gate Operator 20-LCP-2-1	1	20										0.4										48
49	Gate Operator 20-LCP-2-2	1	20						0.4	1.0													50
51	Site Camera #4 (05-FP-4, 05-IR-4)	1	20								0.3	1.0			#8	-	#10	1"	3/4"	3	40	Sanitary Sump Pump Panel 10-LCP-1	52
53	Site Camera #5 (05-FP-5, 05-IR-5)	1	20										0.3	1.0									54
55	Site Camera #6 (05-FP-6, 05-IR-6)	1	20						0.3	0.3										1	20	Weather Station 10WD-1-1	56
57	Site Camera #7 (05-FP-7, 05-IR-7)	1	20								0.3	0.1								1	20	Combustible Gas Detector 10-AIT-1	58
59	Spare	1	20											1.3						1	20	Receptacles - Work Area	60
61	Spare	1	20																	1	20	Spare	62
63	Spare	1	20																	1	20	Spare	64
65																							66
67	Spare	3	20																	2	20	Spare	68
69																							70
71													0.7							1	20	Spare	72
73	Gate Operator (05-LCP-1-3)	3	20						0.7											1	20	Spare	74
75											0.7									1	20	Spare	76
77	Spare	1	20																	1	20	Spare	78
79	Spare	1	20																	1	20	Spare	80
81	Spare	1	20																	1	20	Spare	82
83	Spare	1	20																	1	20	Spare	84
	CONNECTED KVA =								3		3		4										
	CONNECTED AMPS =								26		23		31										

** PROVIDE #12 PHASE (QTY=CB POLES) AND GROUND IN 3/4" CONDUIT UNLESS DIFFERENT NUMBER AND/OR GREATER SIZES ARE SHOWN ON PLANS.

DAVID C. NICHOLSON LICENSE No 60201 STATE OF FLORIDA PROFESSIONAL ENGINEER

3011 SW WILLISTON RD
GAINESVILLE, FLORIDA 32608
EB0000072 AAC001992
DAVID C NICHOLSON PE 60201

NO.	DATE	DSGN
		J LEWIS
		DR A CLOUGH
		CHK M GOSLOW
		APVD D NICHOLSON
		BY APVD

REVISION

©CH2M HILL 2010. ALL RIGHTS RESERVED.

REUSE OF DOCUMENTS: THIS DOCUMENT, AND THE IDEAS AND DESIGNS INCORPORATED HEREIN, AS AN INSTRUMENT OF PROFESSIONAL SERVICE, IS THE PROPERTY OF CH2M HILL AND IS NOT TO BE USED, IN WHOLE OR IN PART, FOR ANY OTHER PROJECT WITHOUT THE WRITTEN AUTHORIZATION OF CH2MHILL.

CH2MHILL

SOLID WASTE SYSTEM
UPGRADE DESIGN
PASCO COUNTY
PASCO COUNTY, FLORIDA

ELECTRICAL

WEST PASCO SITE
POWER RISER DIAGRAM
AND SCHEDULES

RECORD DRAWINGS FOR PERMIT

VERIFY SCALE

BAR IS ONE INCH ON ORIGINAL DRAWING.
0 1"

DATE	AUGUST 2012
PROJ	378217
DWG	10-E-601
SHEET	

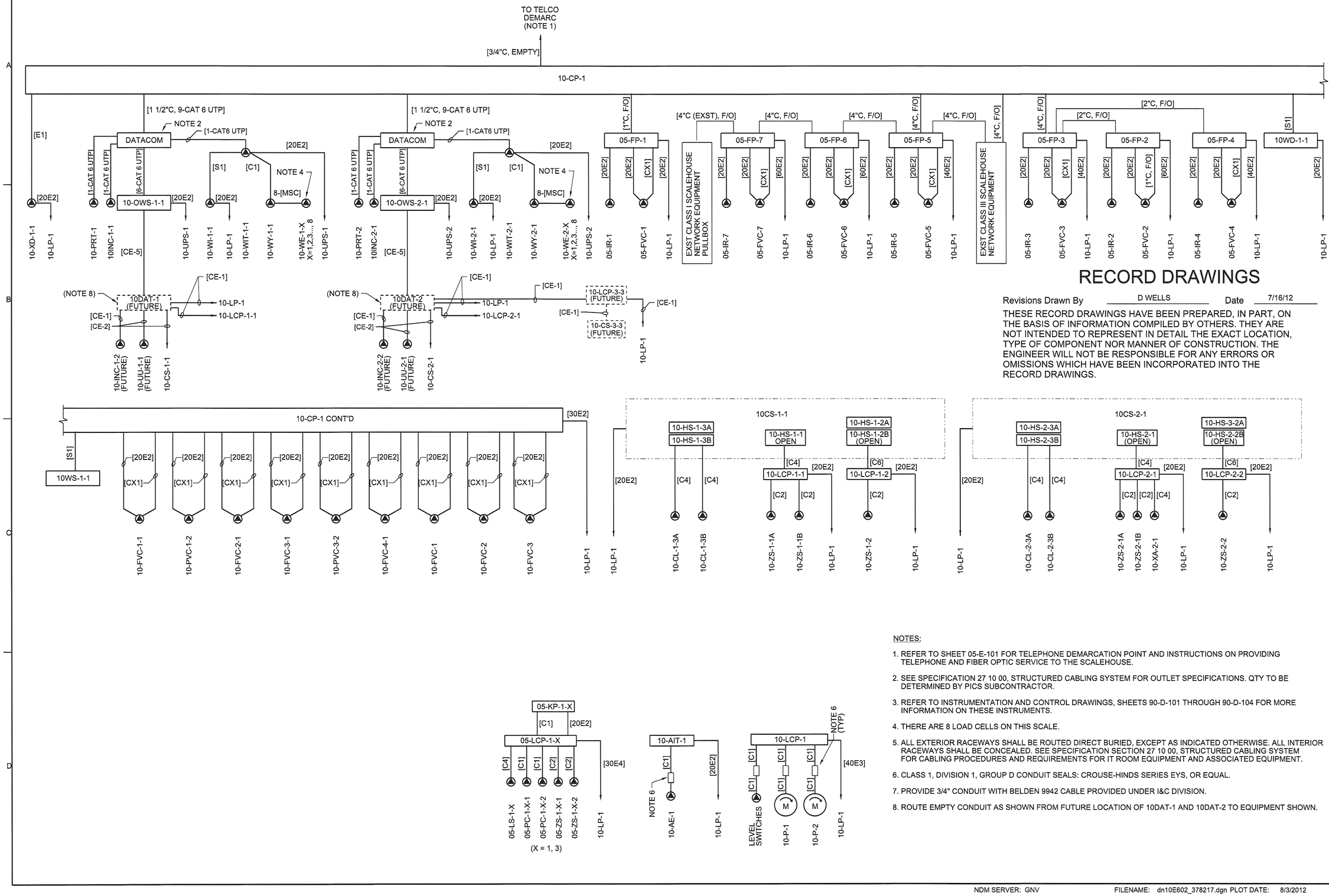

RECORD DRAWINGS

Revisions Drawn By D WELLS Date 7/16/12

THESE RECORD DRAWINGS HAVE BEEN PREPARED, IN PART, ON THE BASIS OF INFORMATION COMPILED BY OTHERS. THEY ARE NOT INTENDED TO REPRESENT IN DETAIL THE EXACT LOCATION, TYPE OF COMPONENT NOR MANNER OF CONSTRUCTION. THE ENGINEER WILL NOT BE RESPONSIBLE FOR ANY ERRORS OR OMISSIONS WHICH HAVE BEEN INCORPORATED INTO THE RECORD DRAWINGS.

NOTES:

1. REFER TO SHEET 05-E-101 FOR TELEPHONE DEMARCATION POINT AND INSTRUCTIONS ON PROVIDING TELEPHONE AND FIBER OPTIC SERVICE TO THE SCALEHOUSE.
2. SEE SPECIFICATION 27 10 00, STRUCTURED CABLING SYSTEM FOR OUTLET SPECIFICATIONS. QTY TO BE DETERMINED BY PICS SUBCONTRACTOR.
3. REFER TO INSTRUMENTATION AND CONTROL DRAWINGS, SHEETS 90-D-101 THROUGH 90-D-104 FOR MORE INFORMATION ON THESE INSTRUMENTS.
4. THERE ARE 8 LOAD CELLS ON THIS SCALE.
5. ALL EXTERIOR RACEWAYS SHALL BE ROUTED DIRECT BURIED, EXCEPT AS INDICATED OTHERWISE. ALL INTERIOR RACEWAYS SHALL BE CONCEALED. SEE SPECIFICATION SECTION 27 10 00, STRUCTURED CABLING SYSTEM FOR CABLING PROCEDURES AND REQUIREMENTS FOR IT ROOM EQUIPMENT AND ASSOCIATED EQUIPMENT.
6. CLASS 1, DIVISION 1, GROUP D CONDUIT SEALS: CROUSE-HINDS SERIES EYS, OR EQUAL.
7. PROVIDE 3/4" CONDUIT WITH BELDEN 9942 CABLE PROVIDED UNDER I&C DIVISION.
8. ROUTE EMPTY CONDUIT AS SHOWN FROM FUTURE LOCATION OF 10DAT-1 AND 10DAT-2 TO EQUIPMENT SHOWN.

DAVID C. NICHOLSON PROFESSIONAL ENGINEER LICENSE NO. 69201 STATE OF FLORIDA

NO.	DATE	DSGN	DR	CHK	APVD	BY	APVD
			J LEWIS	J LEWIS	M GOSLOW		D NICHOLSON

REVISION

©CH2M HILL 2010. ALL RIGHTS RESERVED.

3011 SW WILLISTON RD
GAINESVILLE, FLORIDA 32608
EB0000072 AAC001992
DAVID C NICHOLSON PE 60201

SOLID WASTE SYSTEM
UPGRADE DESIGN
PASCO COUNTY
PASCO COUNTY, FLORIDA

CH2MHILL

ELECTRICAL
WEST PASCO SITE
RISER DIAGRAMS

REUSE OF DOCUMENTS: THIS DOCUMENT, AND THE IDEAS AND DESIGNS INCORPORATED HEREIN, AS AN INSTRUMENT OF PROFESSIONAL SERVICE, IS THE PROPERTY OF CH2M HILL AND IS NOT TO BE USED, IN WHOLE OR IN PART, FOR ANY OTHER PROJECT WITHOUT THE WRITTEN AUTHORIZATION OF CH2MHILL.

RECORD DRAWINGS FOR PERMIT

VERIFY SCALE
BAR IS ONE INCH ON ORIGINAL DRAWING. 0 1"

DATE	AUGUST 2012
PROJ	378217
DWG	10-E-602
SHEET	

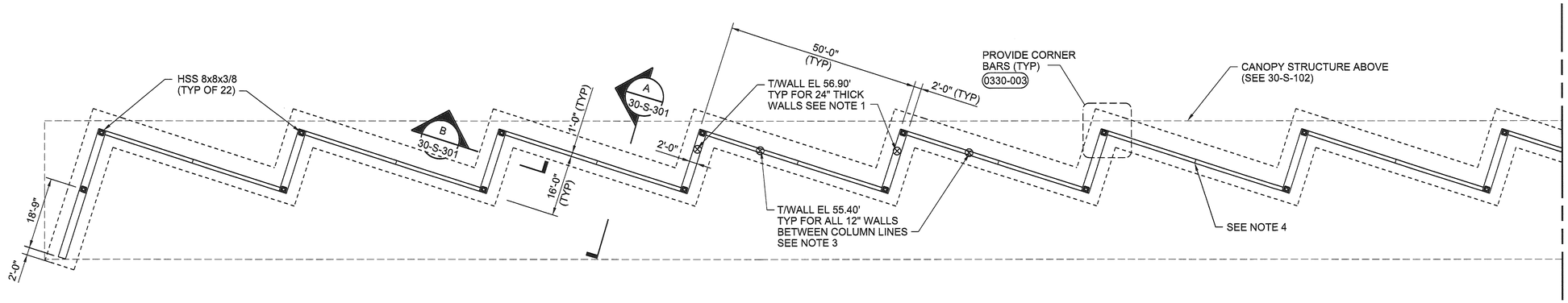

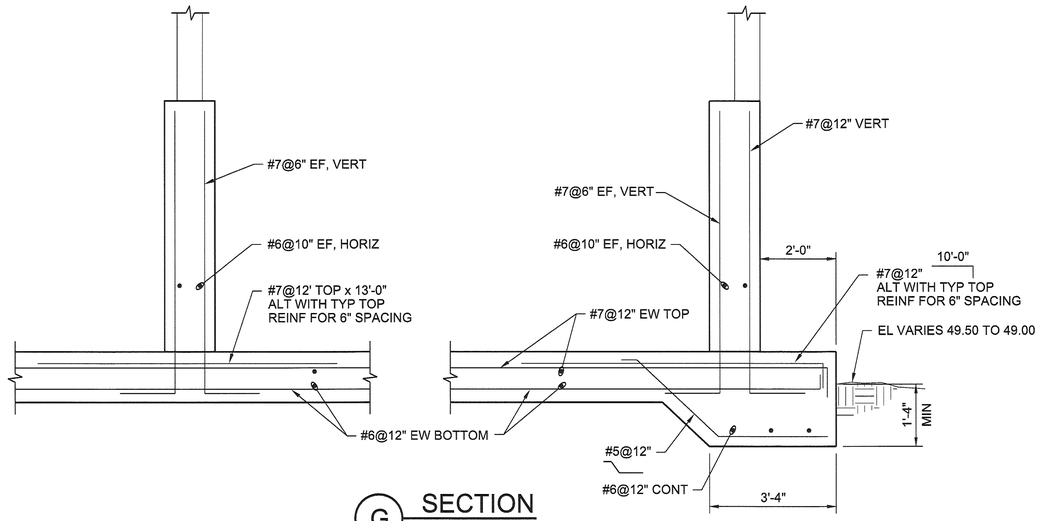

G SECTION
1/2"=1'-0"

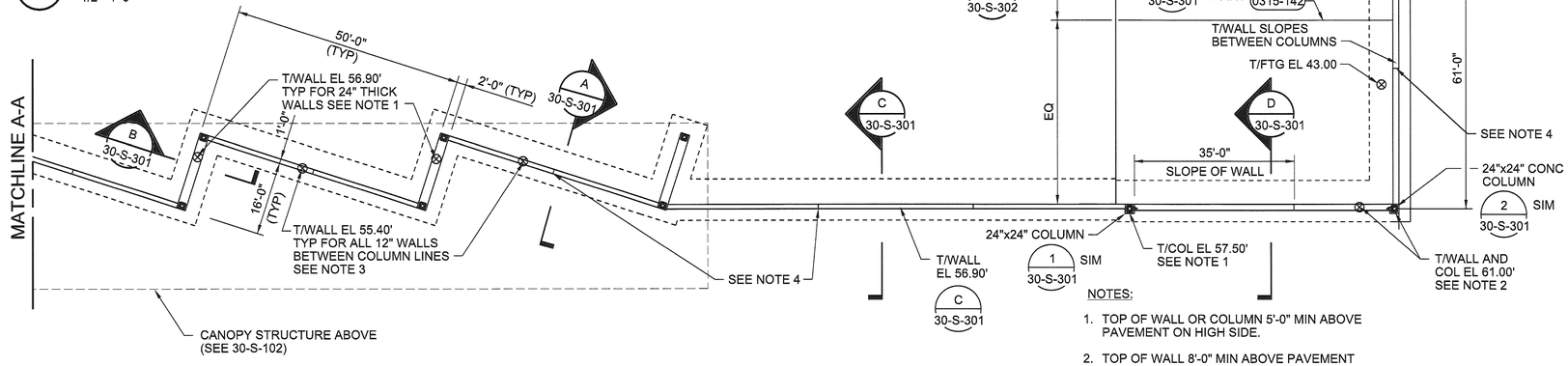

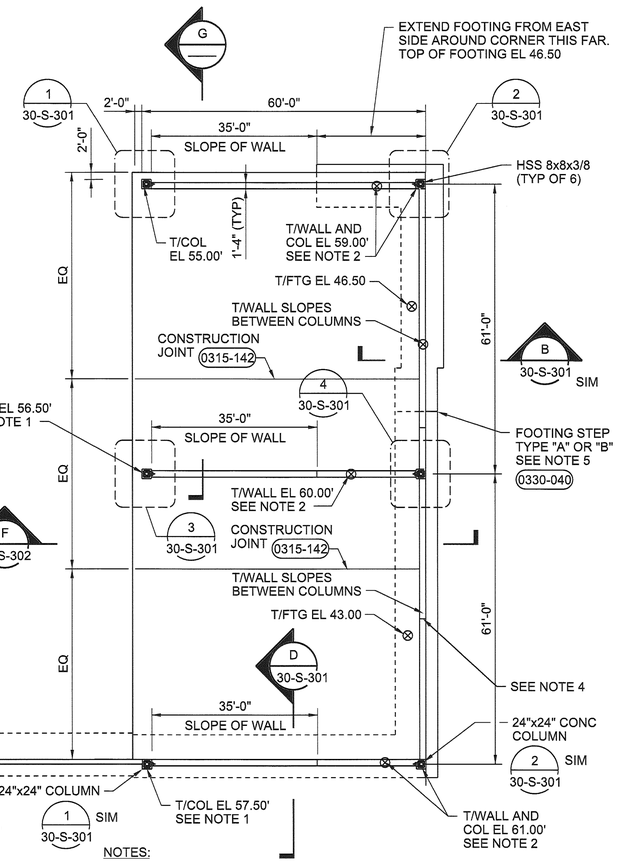

RECORD DRAWINGS

Revisions Drawn By D WELLS Date JULY 2012

THESE RECORD DRAWINGS HAVE BEEN PREPARED, IN PART, ON THE BASIS OF INFORMATION COMPILED BY OTHERS. THEY ARE NOT INTENDED TO REPRESENT IN DETAIL THE EXACT LOCATION, TYPE OF COMPONENT NOR MANNER OF CONSTRUCTION. THE ENGINEER WILL NOT BE RESPONSIBLE FOR ANY ERRORS OR OMISSIONS WHICH HAVE BEEN INCORPORATED INTO THE RECORD DRAWINGS.

CITIZEN DROP OFF FOUNDATION PLAN

1/16"= 1'-0"

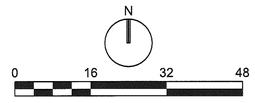

NOTES:

1. TOP OF WALL OR COLUMN 5'-0" MIN ABOVE PAVEMENT ON HIGH SIDE.
2. TOP OF WALL 8'-0" MIN ABOVE PAVEMENT ON HIGH SIDE.
3. TOP OF WALL 3'-6" MIN ABOVE PAVEMENT ON HIGH SIDE.
4. PROVIDE VERT CONTROL JOINTS 0315-201 IN WALLS AT 50' MAX SPACING. SUBMIT LAYOUT FOR REVIEW PRIOR TO CONSTRUCTION.
5. LOCATE STEP SO 1'-6" MIN OF SOIL IS OVER TOE OF FOOTING.

MONRAD R THUE LICENSE No. 32071 STATE OF FLORIDA PROFESSIONAL ENGINEER

NO.	DSGN	DATE	DR	REVISION	CHK	APVD	BY	APVD
	M THUE	M THUE	J PRUITT		M CHRZANOWSKI			M THUE

©CH2M HILL 2010. ALL RIGHTS RESERVED.
THIS DOCUMENT, AND THE IDEAS AND DESIGNS INCORPORATED HEREIN, AS AN INSTRUMENT OF PROFESSIONAL SERVICE, IS THE PROPERTY OF CH2M HILL AND IS NOT TO BE USED, IN WHOLE OR IN PART, FOR ANY OTHER PROJECT WITHOUT THE WRITTEN AUTHORIZATION OF CH2MHILL.
REUSE OF DOCUMENTS:

CH2MHILL
3011 SW WILLISTON RD
GAINESVILLE, FLORIDA 32608
EB0000072 AAC001992
Monrad R Thue PE 32071

SOLID WASTE SYSTEM
UPGRADE DESIGN
PASCO COUNTY
PASCO COUNTY, FLORIDA

STRUCTURAL
WEST PASCO SITE
CITIZEN DROP OFF AREA
FOUNDATION PLAN

VERIFY SCALE
BAR IS ONE INCH ON ORIGINAL DRAWING. 0 1"

DATE	AUGUST 2012
PROJ	378217
DWG	30-S-101
SHEET	

RECORD DRAWINGS FOR PERMIT

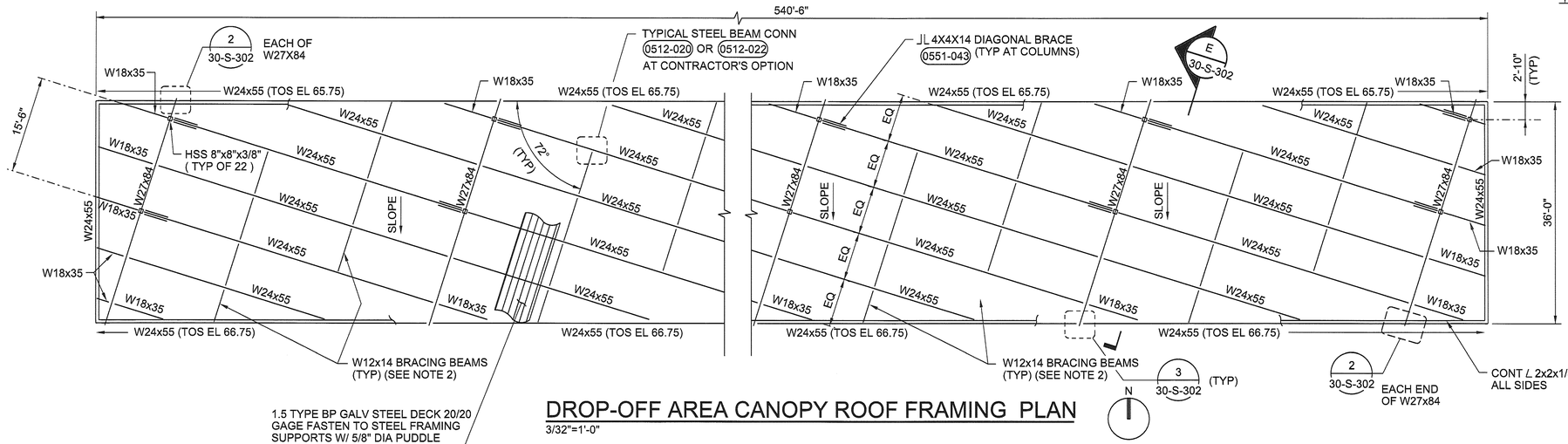

DROP-OFF AREA CANOPY ROOF FRAMING PLAN

3/32"=1'-0"

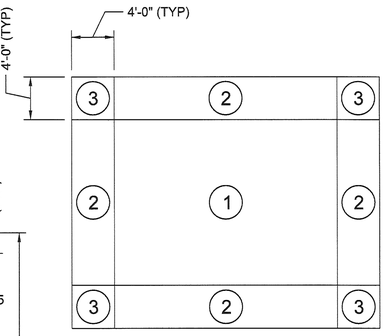

ZONE DIAGRAM FOR ROOF WIND PRESSURES

SEE LOAD TABLE ON 40-S-102

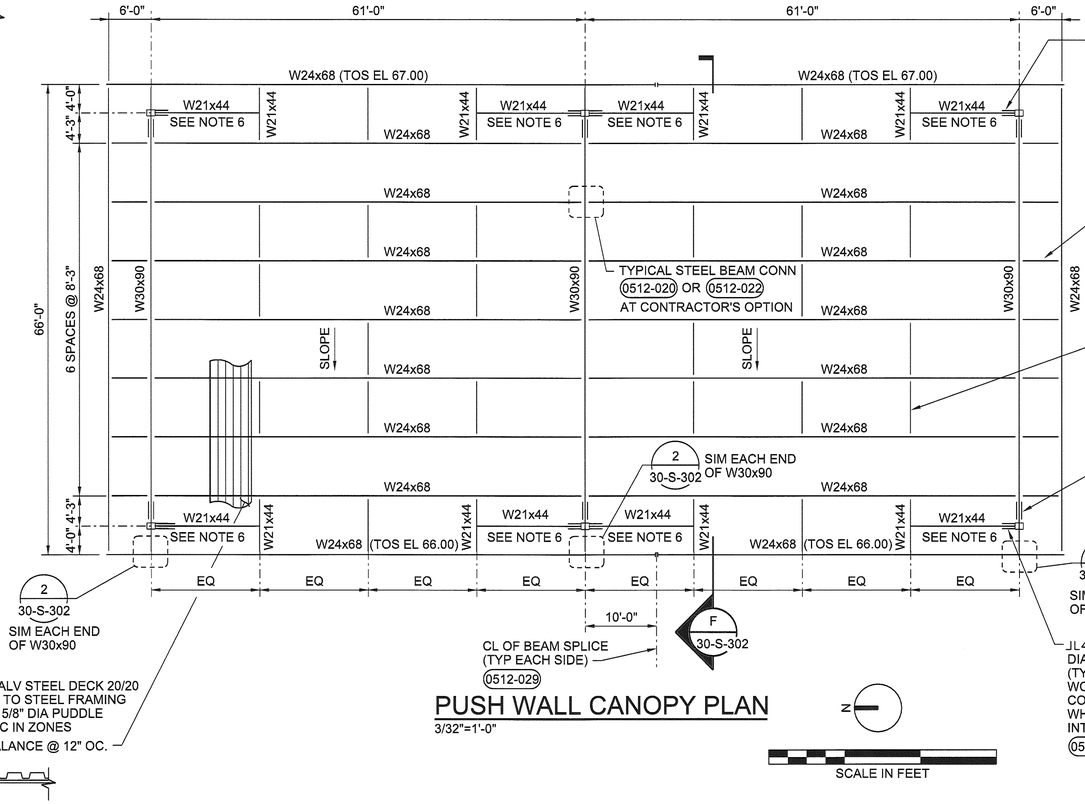

PUSH WALL CANOPY PLAN

3/32"=1'-0"

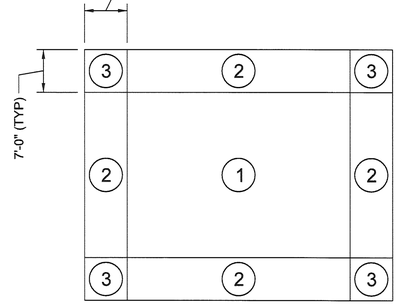

ZONE DIAGRAM FOR ROOF WIND PRESSURES

SEE LOAD TABLE ON 40-S-102

NOTES:

1. SEE ARCHITECTURAL ROOF PLAN FOR ROOF SLOPES CLEAR HEIGHT TO UNDERSIDE OF STEEL FRAMING SHALL NOT BE LESS THAN 12'-0" AT ANY LOCATION.
2. W12x14 BRACING MEMBER TO RUN PERPENDICULAR TO W24x55 BEAMS AT 1/3 POINTS BETWEEN COLUMNS AS SHOWN. BOTTOM OF BEAM ELEVATIONS TO MATCH ROOF SLOPES AND BE 3" ABOVE BOTTOM OF PERPENDICULAR SUPPORTING BEAMS. CONNECT BRACING MEMBERS EACH END PER 0512-022 SIMILAR.
3. CONNECT STEEL BEAMS TO SUPPORTING STEEL BEAMS PER 0512-020 WHERE SKEW IS GREATER THAN 45° USE SINGLE ANGLE 3/8" THICK BENT PLATE CONNECTION WITH 6 ROWS OF 3/4" DIA BOLTS.
4. ROOF FRAMING SLOPES FOR DROP-OFF AREA CANOPY FROM NORTH TO SOUTH WITH TOS ELEVATIONS AT NORTH AND SOUTH SIDES CALLED OUT ON FRAMING PLAN. BEAMS RUNNING EAST AND WEST TO BE TILTED TO MATCH ROOF SLOPE. ROOF FRAMING SLOPES FOR PUSH WALL CANOPY FROM EAST TO WEST WITH TOS ELEVATIONS AT NORTH AND SOUTH SIDES CALLED OUT ON FRAMING PLAN. BEAMS RUNNING EAST AND WEST TO BE TILTED TO MATCH ROOF SLOPE.
5. CONSTRUCT W24 AND W30 BEAMS WITH NATURAL CROWN UP.
6. CONNECT EACH END OF W21x44 TO FULL DEPTH 3/8" STIFFENER PLATES 0512-022 SIMILAR.

RECORD DRAWINGS

Revisions Drawn By D WELLS Date JULY 2012

THESE RECORD DRAWINGS HAVE BEEN PREPARED, IN PART, ON THE BASIS OF INFORMATION COMPILED BY OTHERS. THEY ARE NOT INTENDED TO REPRESENT IN DETAIL THE EXACT LOCATION, TYPE OF COMPONENT NOR MANNER OF CONSTRUCTION. THE ENGINEER WILL NOT BE RESPONSIBLE FOR ANY ERRORS OR OMISSIONS WHICH HAVE BEEN INCORPORATED INTO THE RECORD DRAWINGS.

MONRAD R THUE
LICENSE
No. 32071
STATE OF
FLORIDA
PROFESSIONAL ENGINEER

NO.	DATE	DSGN	DR	CHK	BY
		M THUE	J PRUITT	M CHRZANOWSKI	APVD
			REVISION		M THUE

©CH2M HILL 2010. ALL RIGHTS RESERVED.
THIS DOCUMENT, AND THE IDEAS AND DESIGNS INCORPORATED HEREIN, AS AN INSTRUMENT OF PROFESSIONAL SERVICE, IS THE PROPERTY OF CH2M HILL AND IS NOT TO BE USED, IN WHOLE OR IN PART, FOR ANY OTHER PROJECT WITHOUT THE WRITTEN AUTHORIZATION OF CH2MHILL.
REUSE OF DOCUMENTS:

3011 SW WILLISTON RD.
GAINESVILLE, FLORIDA 32608
EB0000072, AAC001992
Monrad R Thue PE 32071

CH2MHILL

SOLID WASTE SYSTEM
UPGRADE DESIGN
PASCO COUNTY
PASCO COUNTY, FLORIDA

STRUCTURAL
WEST PASCO SITE
CITIZEN DROP OFF AREA
CANOPY ROOF PLAN

RECORD DRAWINGS FOR PERMIT

VERIFY SCALE

BAR IS ONE INCH ON ORIGINAL DRAWING.
0 1"

DATE	AUGUST 2012
PROJ	378217
DWG	30-S-102
SHEET	

NDM SERVER: GNV FILENAME: dn30s102_378217.dgn PLOT DATE: 8/3/2012 PLOT TIME: 11:21:46 AM

RECORD DRAWINGS

Revisions Drawn By D WELLS Date JULY 2012

THESE RECORD DRAWINGS HAVE BEEN PREPARED, IN PART, ON THE BASIS OF INFORMATION COMPILED BY OTHERS. THEY ARE NOT INTENDED TO REPRESENT IN DETAIL THE EXACT LOCATION, TYPE OF COMPONENT NOR MANNER OF CONSTRUCTION. THE ENGINEER WILL NOT BE RESPONSIBLE FOR ANY ERRORS OR OMISSIONS WHICH HAVE BEEN INCORPORATED INTO THE RECORD DRAWINGS.

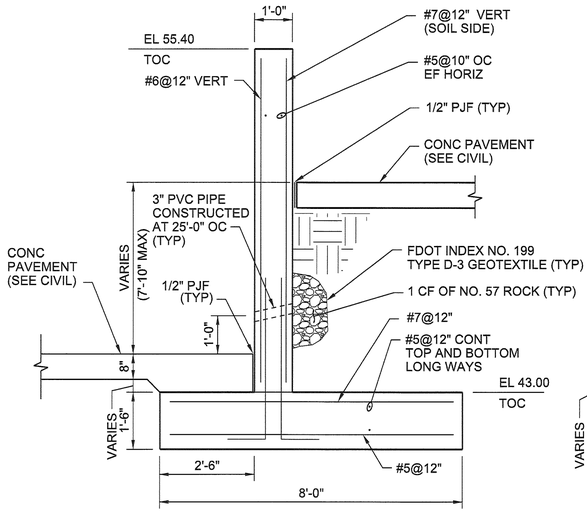

A SECTION
1/2"= 1'-0"

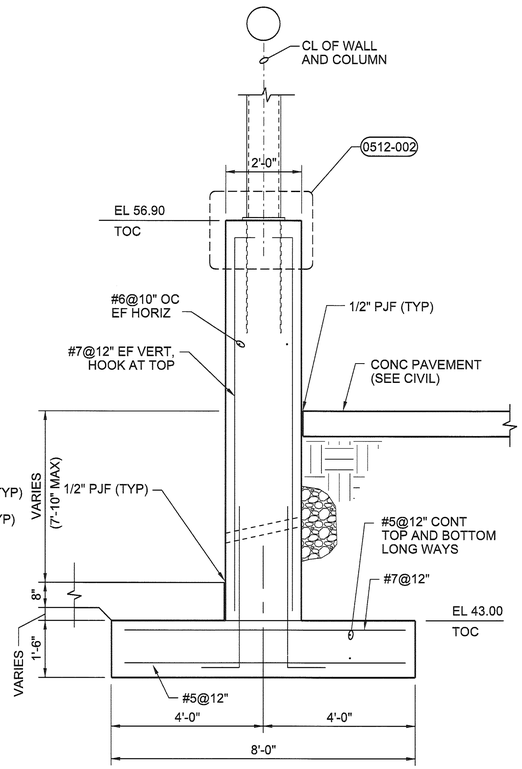

B SECTION
1/2"= 1'-0"

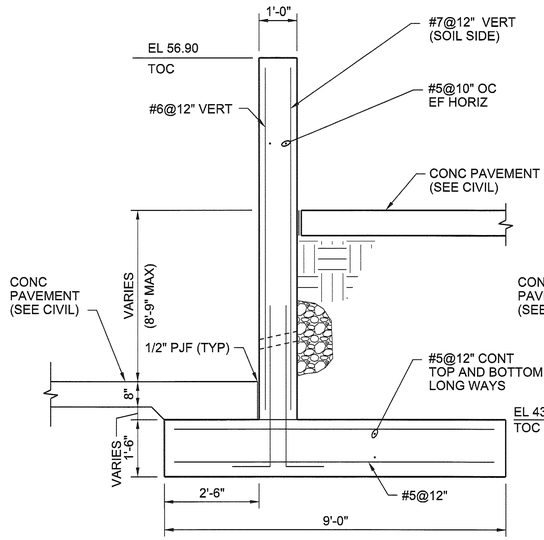

C SECTION
1/2"= 1'-0"

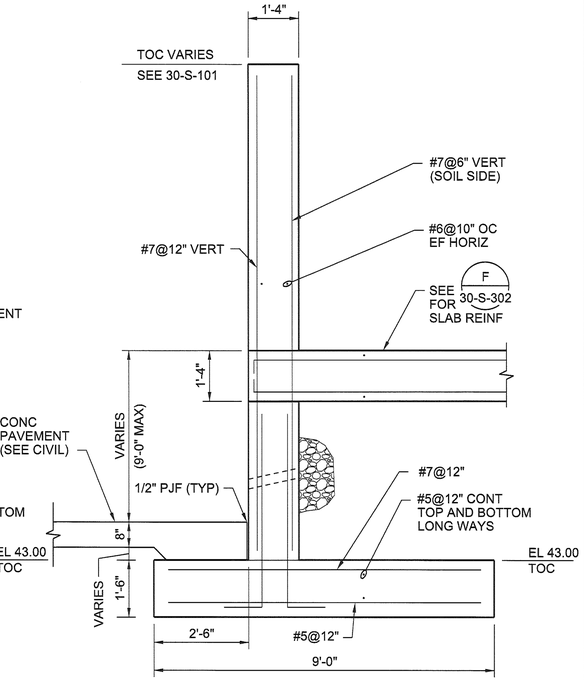

D SECTION
1/2"= 1'-0"

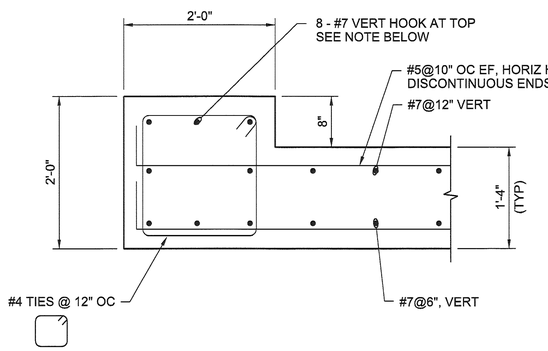

1 DETAIL
1"= 1'-0"

NOTE:
PROVIDE VERTICAL DOWELS TO MATCH VERTICAL REINFORCING AND HOOK DOWELS AT BOTTOM OF MAT FOOTING SEE SECTIONS
G
30-S-302

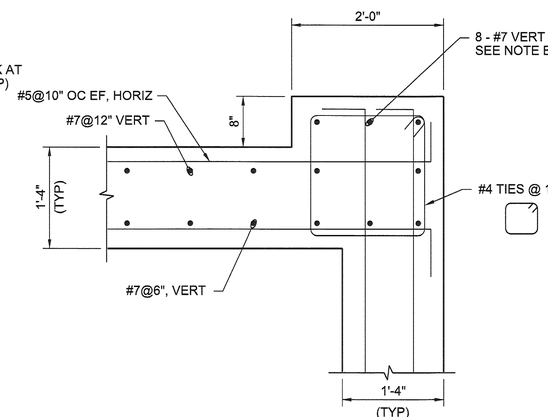

2 DETAIL
1"= 1'-0"

NOTE:
PROVIDE VERTICAL DOWELS TO MATCH VERTICAL REINFORCING AND HOOK DOWELS AT BOTTOM OF MAT FOOTING SEE SECTIONS
F
30-S-302

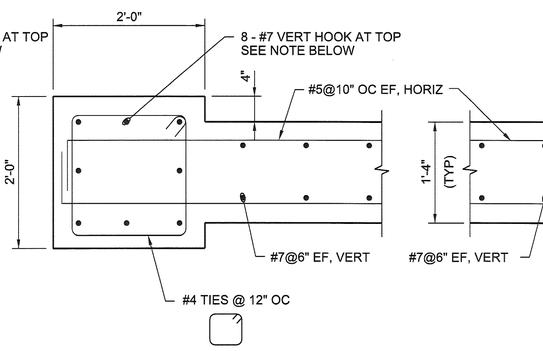

3 DETAIL
1"= 1'-0"

NOTE:
PROVIDE VERTICAL DOWELS TO MATCH VERTICAL REINFORCING AND HOOK DOWELS AT BOTTOM OF MAT FOOTING SEE SECTIONS
G
30-S-302

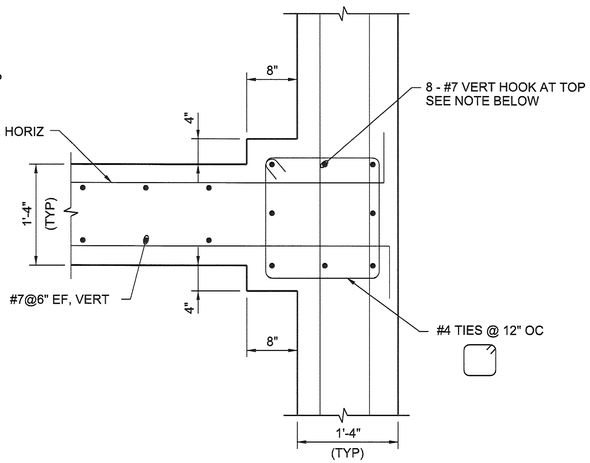

4 DETAIL
1"= 1'-0"

NOTE:
PROVIDE VERTICAL DOWELS TO MATCH VERTICAL REINFORCING AND HOOK DOWELS AT BOTTOM OF WALL FOOTING SEE SECTIONS
F
30-S-302

NDM SERVER: GNV FILENAME: dn30S301_378217.dgn PLOT DATE: 8/3/2012 PLOT TIME: 11:21:38 AM

MONRAD R THUE LICENSE No. 32071 STATE OF FLORIDA PROFESSIONAL ENGINEER

NO.	DATE	DR	REVISION	CHK	BY	APVD
DSGN	M THUE	J PRUITT		M CHRZANOWSKI		M THUE

©CH2M HILL 2010. ALL RIGHTS RESERVED.

3011 SW WILLISTON RD.
GAINESVILLE, FLORIDA 32608
EB0000072 AAC001992
Monrad R Thue PE 32071

SOLID WASTE SYSTEM
UPGRADE DESIGN
PASCO COUNTY
PASCO COUNTY, FLORIDA

CH2MHILL

STRUCTURAL
WEST PASCO SITE
CITIZEN DROP OFF AREA
SECTIONS AND DETAILS

REUSE OF DOCUMENTS: THIS DOCUMENT, AND THE IDEAS AND DESIGNS INCORPORATED HEREIN, AS AN INSTRUMENT OF PROFESSIONAL SERVICE, IS THE PROPERTY OF CH2M HILL AND IS NOT TO BE USED, IN WHOLE OR IN PART, FOR ANY OTHER PROJECT WITHOUT THE WRITTEN AUTHORIZATION OF CH2MHILL.

RECORD DRAWINGS FOR PERMIT

VERIFY SCALE
BAR IS ONE INCH ON ORIGINAL DRAWING. 0 1"

DATE	AUGUST 2012
PROJ	378217
DWG	30-S-301
SHEET	

RECORD DRAWINGS

Revisions Drawn By D WELLS Date JULY 2012

THESE RECORD DRAWINGS HAVE BEEN PREPARED, IN PART, ON THE BASIS OF INFORMATION COMPILED BY OTHERS. THEY ARE NOT INTENDED TO REPRESENT IN DETAIL THE EXACT LOCATION, TYPE OF COMPONENT NOR MANNER OF CONSTRUCTION. THE ENGINEER WILL NOT BE RESPONSIBLE FOR ANY ERRORS OR OMISSIONS WHICH HAVE BEEN INCORPORATED INTO THE RECORD DRAWINGS.

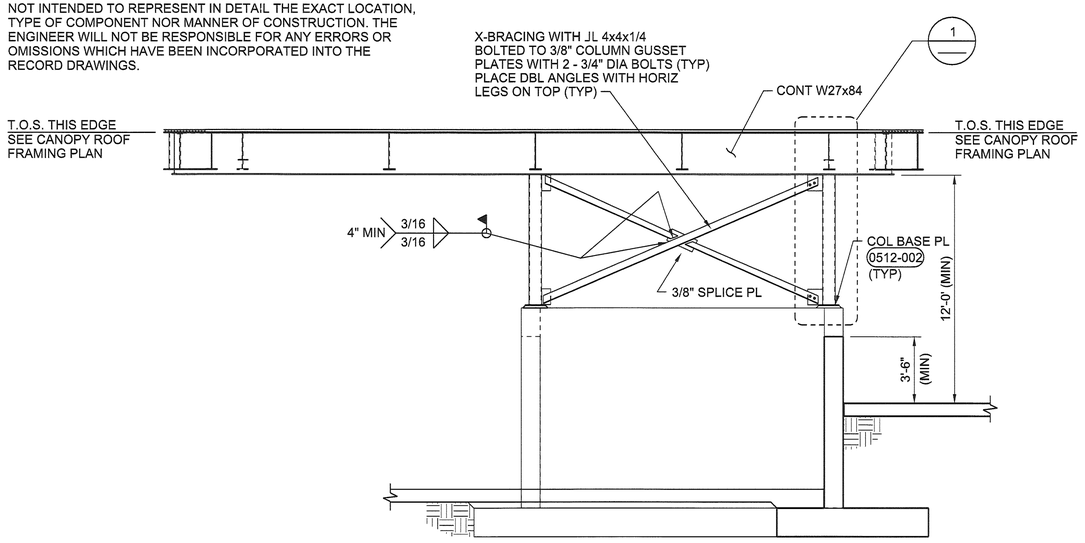

E SECTION
1/4"= 1'-0"

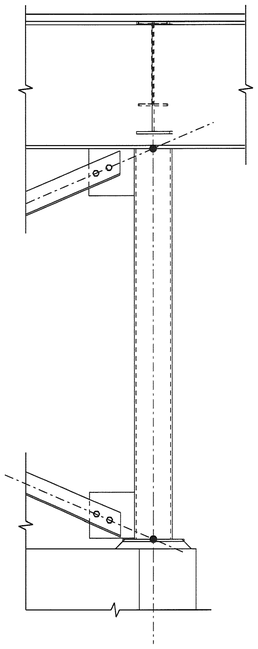

1 DETAIL
3/4"= 1'-0"

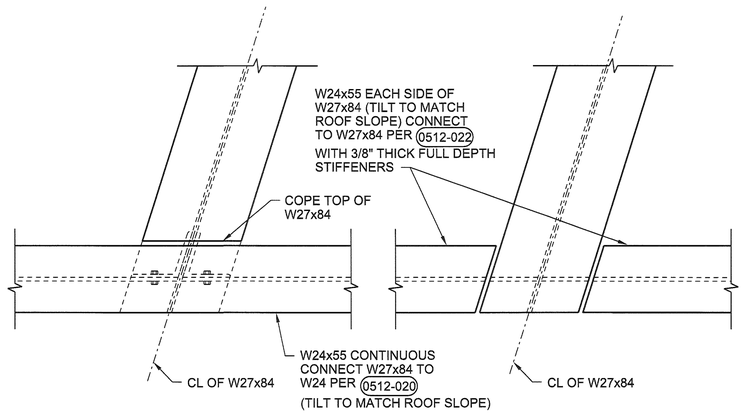

2 DETAIL
1"= 1'-0"

3 DETAIL
1"= 1'-0"

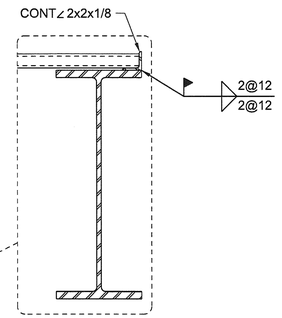

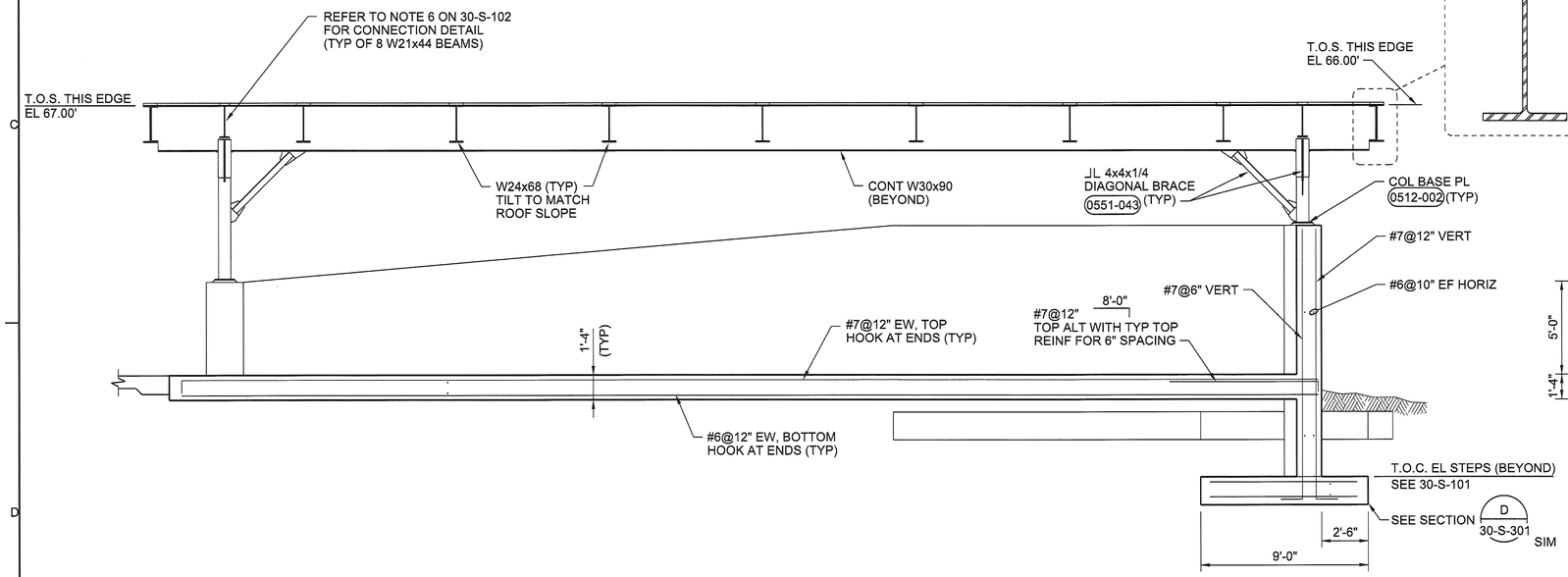

F SECTION
1/4"= 1'-0"

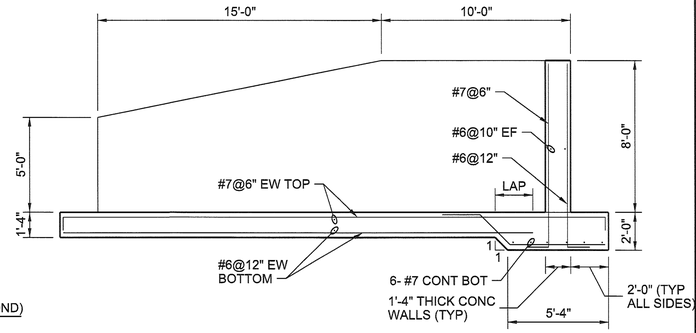

G SECTION
1/4"= 1'-0"

©CH2M HILL 2010. ALL RIGHTS RESERVED.

MONRAD R THUE LICENSE No 32071 STATE OF FLORIDA PROFESSIONAL ENGINEER

NO.	DATE	DSGN	DR	CHK	APVD	BY	APVD
REVISION		M THUE	J PRUITT	M CHRZANOWSKI		M THUE	

3011 SW WILLISTON RD
GAINESVILLE, FLORIDA 32608
EB0000072 AAC001992
Monrad R Thue PE 32071

SOLID WASTE SYSTEM
UPGRADE DESIGN
PASCO COUNTY
PASCO COUNTY, FLORIDA

CH2MHILL

STRUCTURAL
WEST PASCO SITE
CITIZEN DROP OFF AREA
SECTIONS AND DETAILS

REUSE OF DOCUMENTS: THIS DOCUMENT, AND THE IDEAS AND DESIGNS INCORPORATED HEREIN, AS AN INSTRUMENT OF PROFESSIONAL SERVICE, IS THE PROPERTY OF CH2M HILL AND IS NOT TO BE USED, IN WHOLE OR IN PART, FOR ANY OTHER PROJECT WITHOUT THE WRITTEN AUTHORIZATION OF CH2MHILL.

RECORD DRAWINGS FOR PERMIT

VERIFY SCALE
BAR IS ONE INCH ON ORIGINAL DRAWING. 0 1"

DATE	AUGUST 2012
PROJ	378217
DWG	30-S-302
SHEET	

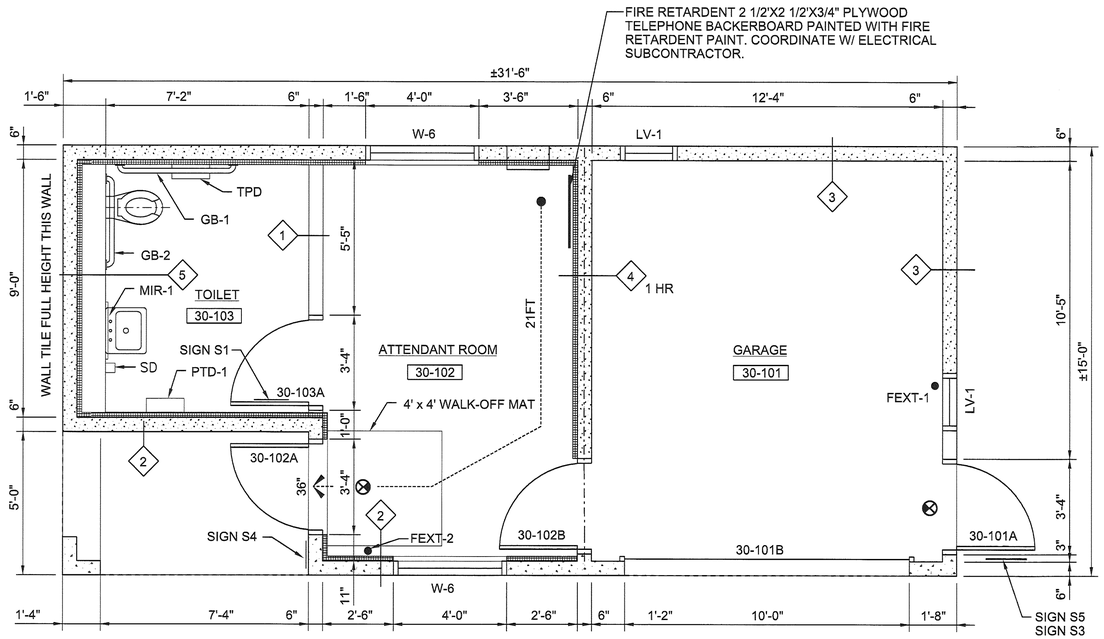

FLOOR PLAN/LIFE SAFETY PLAN

3/8"=1"

0 1 2 3

3/8"=1'

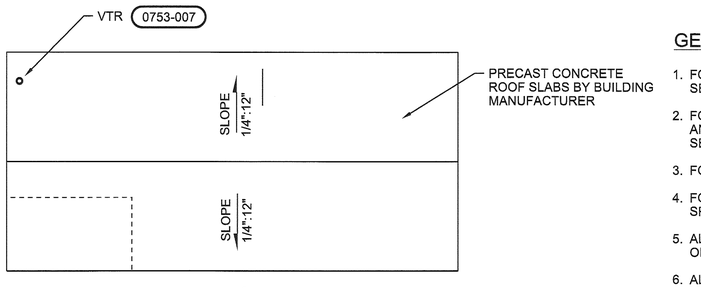

ROOF PLAN

3/16"=1"

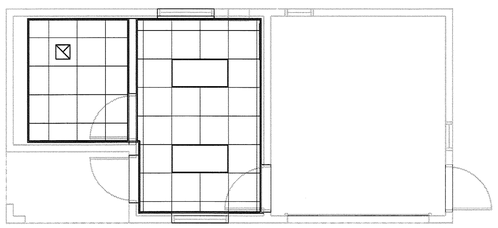

REFLECTED CEILING PLAN

3/16"=1"

GENERAL NOTES:

1. FOR SIGN INFORMATION AND TYPE DESCRIPTIONS SEE SPECIFICATIONS SECTION 10 14 00.
2. FOR ARCHITECTURAL LEGEND AND ADA FIXTURE AND ACCESSORY MOUNTING INFORMATION SEE SHEET 00-G-009.
3. FOR ABBREVIATIONS SEE SHEET 00-G-003.
4. FOR FIRE EXTINGUISHER INFORMATION SEE SPECIFICATIONS SECTION 10 44 00.
5. ALL DIMENSIONS ARE FROM FACE OF CONCRETE OR FINISH FACE OF STUD WALLS.
6. ALL FASTENERS USED TO CONNECT INTERIOR "BUILD-OUT" MEMBERS SHAL BE GALVANIZED CONCRETE SCREW ANCHORS AND SHALL BE PRE-DRILLED. COORDINATE WITH THE PRECAST BUILDING MANUFACTURER PRIOR TO PENETRATING CONCRETE WALLS, SLABS AND CEILINGS WITH ANY FASTENERS.

LEGEND

- X' — TRAVEL DISTANCE (X = TOTAL DISTANCE TO EXIT IN FEET)
- X" — EGRESS WIDTH (IN INCHES)
- ● F. EXT-1 — FIRE EXTINGUISHER
- ● F. EXT-2 — FIRE EXTINGUISHER
- ⊗ — EXIT LIGHT, ONE SIDED
- S1 — SIGN CALL OUT
- 1 HOUR RATED WALL

PRE-ENGINEERED BUILDINGS AND COMPONENTS IN FLORIDA

THE PRE-ENGINEERED BUILDING DRAWINGS AND SPECIFICATIONS INCLUDE CLADDING COMPONENTS SUCH AS WINDOWS, DOORS , FRAMES AND LOUVERS. SPECIFICATIONS SECTIONS QUALIFY EACH COMPONENTS AND DEVELOPED RESISTANT WIND PRESSURES ARE SHOWN ON THE DOOR AND HARDWARE SCHEDULE, THE WINDOW SCHEDULE AND THE LOUVER SCHEDULE.

THE PRE-ENGINEERED BUILDING MANUFACTURER MAY SUBMIT, AS PART OF THE SHOP DRAWINGS PROCESS, COMPONENTS TO BE SUPPLIED AND INSTALLED PROVIDING THIRD PARTY TESTING INFORMATION OR FLORIDA LICENSED ENGINEER CALCULATIONS ARE SUBMITTED FOR APPROVAL ESTABLISHING THE MANUFACTUER'S STANDARD COMPONENTS AS MEETING THE CRITERIA ESTABLISHED BY THE PROJECT SPECIFICATIONS FOR EACH CLADDING COMPONENT.

RECORD DRAWINGS

Revisions Drawn By K RINER Date JULY 2012

THESE RECORD DRAWINGS HAVE BEEN PREPARED, IN PART, ON THE BASIS OF INFORMATION COMPILED BY OTHERS. THEY ARE NOT INTENDED TO REPRESENT IN DETAIL THE EXACT LOCATION, TYPE OF COMPONENT NOR MANNER OF CONSTRUCTION. THE ~~ENGINEER~~ WILL NOT BE RESPONSIBLE FOR ANY ERRORS OR OMISSIONS WHICH HAVE BEEN INCORPORATED INTO THE RECORD DRAWINGS.

Architect

WALL TYPES

GENERAL WALL FRAMING NOTE:

GENERAL CONTRACTOR TO COORDINATE LOCATION OF EXTRA STUDS AS REQUIRED IN ALL WALL TYPES FOR SUPPORT AND/OR MOUNTING OF ELECTRICAL, PLUMBING OR HVAC EQUIPMENT AS SHOWN ON DRAWINGS.

1	0 HR	5/8" GYPSUM BD 3 5/8" GALV STEEL STUD @ 16" OC 5/8" GYPSUM BD. SOUND ATTENUATION INSULATION	FULL HEIGHT
2	0 HR	CONCRETE GALV Z-FURRING 5/8" GYPSUM BD. RIGID POLYISOCYANURATE R-19 MIN	FULL HEIGHT
3	0 HR	CONCRETE	FULL HEIGHT
4	1 HR	CONCRETE RIDGE POLYISOCYANURATE R-19 MIN 5/8" GYPSUM BD.	FULL HEIGHT
5	0 HR	CONCRETE RIDGE POLYISOCYANURATE R-19 MIN 8"min 5/8" CEMENTITIOUS BACKER BOARD GALV. "C" OR "Z" STUDS AS REQUIRED	FULL HEIGHT

CODE DATA

2007 FLORIDA BUILDING CODE AS AMENDED BY LOCAL AGENCIES

SEE DRAWING 00-G-006 FOR APPLICABLE CODES.

BUILDING: EAST CDA ATTENDANT BUILDING

GENERAL INFORMATION

USE AND OCCUPANCY CLASSIFICATION (CHAPTER 3)	GROUP B BUSINESS
CONSTRUCTION CLASSIFICATION (CHAPTER 6)	IIB

AREA AND HEIGHT LIMITATIONS

MAXIMUM ALLOWABLE AREA (TABLE 503)		23,000 SF
ACTUAL AREA:		488 SF
ACTUAL PER FLOOR:	BASEMENT	N/A
	FIRST	488 SF
	SECOND	N/A
MAXIMUM ALLOWABLE STORIES (TABLE 503)		4
ACTUAL NUMBER OF STORIES		1
MAXIMUM ALLOWABLE HEIGHT (TABLE 503)		55 FT
ACTUAL HEIGHT:		12'-4"

OCCUPANCY / EGRESS INFORMATION

DESIGN OCCUPANCY (TABLE 1004.1.2)	1 PER 100 GROSS SF= 2
ACTUAL NUMBER OF OCCUPANTS	1
EGRESS WIDTH BASED ON OCCUPANCY (TABLE 1005.1)	0.4 IN (36 IN PROVIDED)
ALLOWABLE DEAD END LENGTH (TABLE 1016.3)	20 FT
NUMBER OF EXITS	1
ALLOWABLE COMMON PATH OF TRAVEL (1013.3)	75 FT
MAX TRAVEL DISTANCE ALLOWED (TABLE 1015.1)	75 FT

REQUIRED FIRE RESISTANT RATINGS

BUILDING ELEMENTS (TABLE 601)	
STRUCTURAL FRAME	0 HR
EXTERIOR BEARING WALLS	0 HR
INTERIOR BEARING WALLS	0 HR
INTERIOR NON-BEARING WALLS	0 HR
FLOOR CONSTRUCTION	0 HR
ROOF CONSTRUCTION	0 HR
SHAFT ENCLOSURE (707.4)	N/A
STAIRWAY ENCLOSURE (1019.1)	N/A
CORRIDOR (TABLE 1016.1)	0 HR
OCCUPANCY SEPARATION (302.3.2)	N/A
INCIDENTAL USE AREAS (302.1.1)	N/A
FIRE SEPARATION DISTANCE (TABLE 602)	> 20 FT = 0 HR
DISTANCE FROM ADJACENT BUILDING OR PROPERTY LINE (TABLE 602)	> 20 FT = 0 HR

FIRE PROTECTION

SPRINKLERS	NOT REQUIRED, NOT PROVIDED
FIRE EXTINGUISHERS	PROVIDED
EXIT LIGHTING	PROVIDED

PLUMBING FIXTURES (FPC 403.1)

OCCUPANCY								
MINIMUM FIXTURE COUNT	WC		LAV		SHOWER	0	SINK	0
	M	F	M	F	DF	1	SS	1
	1	1	1	1				
ACTUAL FIXTURE COUNT	WC		LAV		SHOWER	0	SINK	1
	M	F	M	F	DF	0	SS	0
	1		1					
URINALS (FPC 419.2)	NOT MORE THAN 50% OF WC REQ.							

STATE OF FLORIDA BETH TRAUTWEIN AR 91388 REGISTERED ARCHITECT

NO.	DSGN	DATE	DR	REVISION	CHK	APVD	BY	APVD
	B TRAUTWEIN		A COULLIAS		T DODGE		B TRAUTWEIN	

©CH2M HILL 2010. ALL RIGHTS RESERVED.

REUSE OF DOCUMENTS: THIS DOCUMENT, AND THE IDEAS AND DESIGNS INCORPORATED HEREIN, AS AN INSTRUMENT OF PROFESSIONAL SERVICE, IS THE PROPERTY OF CH2M HILL AND IS NOT TO BE USED, IN WHOLE OR IN PART, FOR ANY OTHER PROJECT WITHOUT THE WRITTEN AUTHORIZATION OF CH2MHILL.

3011 SW WILLISTON RD
GAINESVILLE, FLORIDA 32608
EB00000072 AAC001992
Beth Trautwein AR 91388

SOLID WASTE SYSTEM
UPGRADE DESIGN
PASCO COUNTY
PASCO COUNTY, FLORIDA

CH2MHILL

ARCHITECTURAL
WEST PASCO SITE
CITIZEN DROP OFF ATTENDANT BUILDING
LIFE SAFETY & FLOOR PLAN

VERIFY SCALE

BAR IS ONE INCH ON ORIGINAL DRAWING. 0 1"

DATE	AUGUST 2012
PROJ	378217
DWG	30-A-101
SHEET	

RECORD DRAWINGS FOR PERMIT

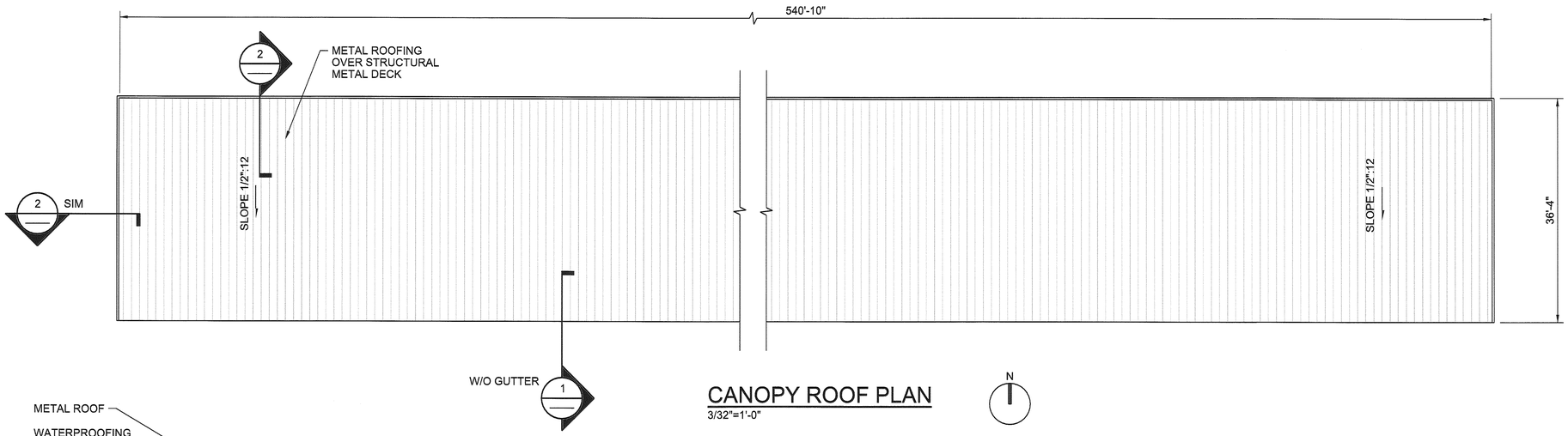

CANOPY ROOF PLAN

3/32"=1'-0"

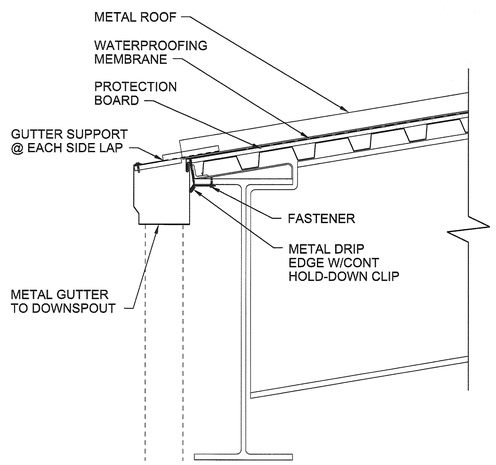

1 DETAIL

3/4"=1'-0"

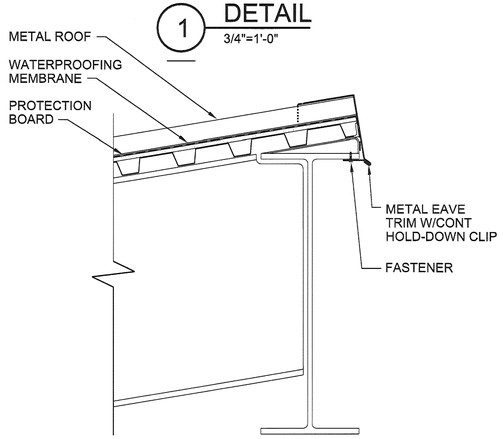

2 DETAIL

3/4"=1'-0"

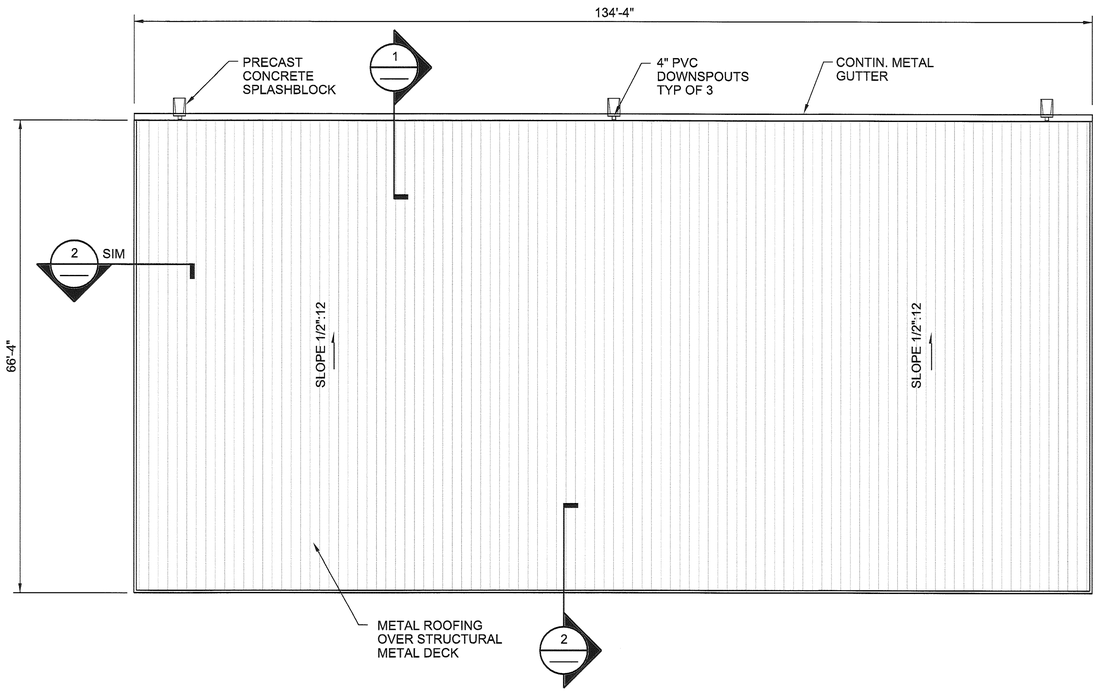

PUSH WALL CANOPY PLAN

3/32"=1'-0"

NOTE: LOCATE DOWNSPOUTS ON CENTERLINE OF STEEL COLUMNS AND PIPE TO PRECAST CONCRETE SPLASHBLOCKS ON GRADE

RECORD DRAWINGS

Revisions Drawn By K RINER Date JULY 2012

THESE RECORD DRAWINGS HAVE BEEN PREPARED, IN PART, ON THE BASIS OF INFORMATION COMPILED BY OTHERS. THEY ARE NOT INTENDED TO REPRESENT IN DETAIL THE EXACT LOCATION, TYPE OF COMPONENT NOR MANNER OF CONSTRUCTION. THE ~~ENGINEER~~ Architect WILL NOT BE RESPONSIBLE FOR ANY ERRORS OR OMISSIONS WHICH HAVE BEEN INCORPORATED INTO THE RECORD DRAWINGS.

NO.	DATE	REVISION	BY	APVD

DSGN B TRAUTWEIN | DR B NARAMORE | CHK T DODGE | APVD B TRAUTWEIN

CH2MHILL

3011 SW WILLISTON RD
GAINESVILLE, FLORIDA 32608
EB0000072 AAC001992
Beth Trautwein AR 91388

SOLID WASTE SYSTEM
UPGRADE DESIGN
PASCO COUNTY
PASCO COUNTY, FLORIDA

ARCHITECTURAL
WEST PASCO SITE
CITIZEN DROP OFF AREA
CANOPY ROOF PLANS

VERIFY SCALE
BAR IS ONE INCH ON ORIGINAL DRAWING.
0 1"

DATE	AUGUST 2012
PROJ	378217
DWG	30-A-102
SHEET	

REUSE OF DOCUMENTS: THIS DOCUMENT, AND THE IDEAS AND DESIGNS INCORPORATED HEREIN, AS AN INSTRUMENT OF PROFESSIONAL SERVICE, IS THE PROPERTY OF CH2M HILL AND IS NOT TO BE USED, IN WHOLE OR IN PART, FOR ANY OTHER PROJECT WITHOUT THE WRITTEN AUTHORIZATION OF CH2MHILL.
©CH2M HILL 2010. ALL RIGHTS RESERVED.

RECORD DRAWINGS FOR PERMIT

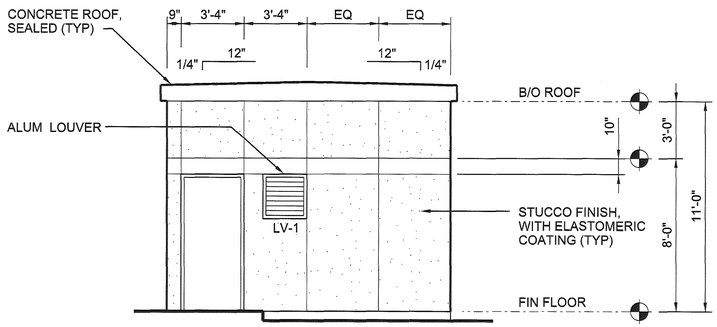

NORTH ELEVATION
1/4"=1'-0"

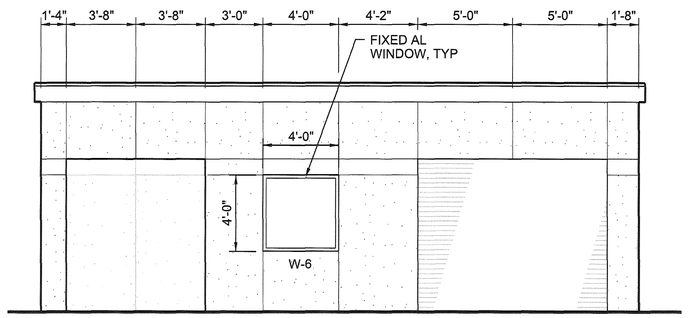

EAST ELEVATION
1/4"=1'-0"

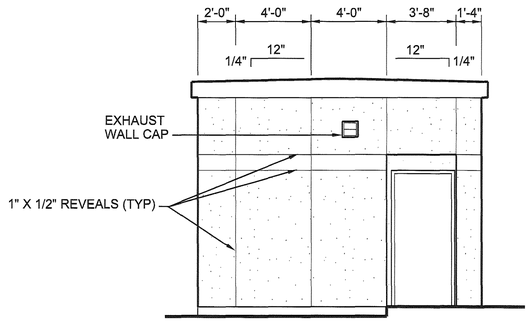

SOUTH ELEVATION
1/4"=1'-0"

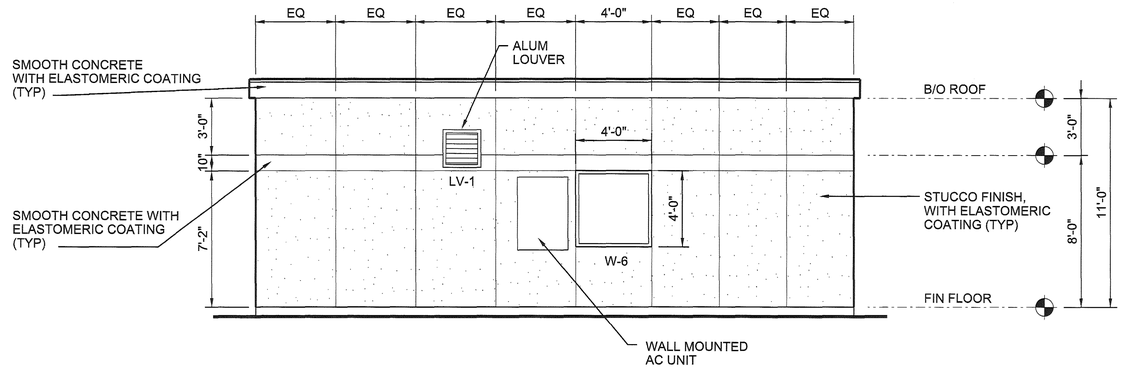

WEST ELEVATION
1/4"=1'-0"

RECORD DRAWINGS

Revisions Drawn By K RINER Date JULY 2012

THESE RECORD DRAWINGS HAVE BEEN PREPARED, IN PART, ON THE BASIS OF INFORMATION COMPILED BY OTHERS. THEY ARE NOT INTENDED TO REPRESENT IN DETAIL THE EXACT LOCATION, TYPE OF COMPONENT NOR MANNER OF CONSTRUCTION. THE ~~ENGINEER~~ WILL NOT BE RESPONSIBLE FOR ANY ERRORS OR OMISSIONS WHICH HAVE BEEN INCORPORATED INTO THE RECORD DRAWINGS.

ARCHITECT

0 1 2 3
1/4"=1'

STATE OF FLORIDA BETH TRAUTWEIN REGISTERED ARCHITECT AR91388

NO.	DATE	REVISION	BY
DSGN	B TRAUTWEIN		APVD
DR	A COULLIAS	CHK	T DODGE
		APVD	B TRAUTWEIN

©CH2M HILL 2010. ALL RIGHTS RESERVED.

3011 SW WILLISTON RD
GAINESVILLE, FLORIDA 32608
EB0000072 AAC001992
Beth Trautwein AR 91388

SOLID WASTE SYSTEM
UPGRADE DESIGN
PASCO COUNTY
PASCO COUNTY, FLORIDA

CH2MHILL

ARCHITECTURAL
WEST PASCO SITE
CDA ATTENDANT BUILDING
ELEVATIONS

REUSE OF DOCUMENTS: THIS DOCUMENT, AND THE IDEAS AND DESIGNS INCORPORATED HEREIN, AS AN INSTRUMENT OF PROFESSIONAL SERVICE, IS THE PROPERTY OF CH2M HILL, AND IS NOT TO BE USED, IN WHOLE OR IN PART, FOR ANY OTHER PROJECT WITHOUT THE WRITTEN AUTHORIZATION OF CH2MHILL.

RECORD DRAWINGS FOR PERMIT

VERIFY SCALE
BAR IS ONE INCH ON ORIGINAL DRAWING.
0 1"

DATE	AUGUST 2012
PROJ	378217
DWG	30-A-201
SHEET	

NDM SERVER: GNV FILENAME: dn30A201_378217.dgn PLOT DATE: 8/3/2012 PLOT TIME: 11:20:42 AM

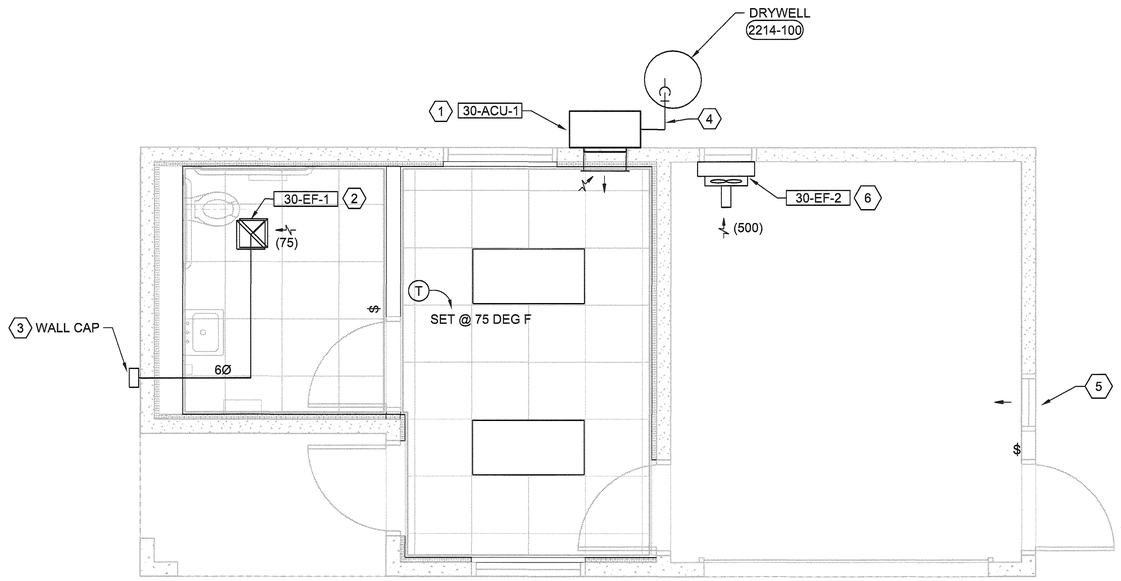

FLOOR PLAN

3/8"=1'-0"

0 4 8 12

Scale In Feet

GENERAL NOTES:

A. ALL DUCTWORK IS GALVANIZED STEEL, UNLESS OTHERWISE NOTED. REFER TO SPECIFICATIONS FOR ADDITIONAL REQUIREMENTS.

B. COORDINATE LOCATION OF ALL CEILING MOUNTED EQUIPMENT WITH REFLECTED CEILING PLAN, REFER TO ARCHITECTURAL DRAWINGS FOR RCP.

KEYNOTES:

1. WALL MOUNT AIR CONDITIONING UNIT. SUPPLY ADN RETURN GRILLES BY EQUIPMENT MANUFACTURER.
2. CABINET EXHAUST FAN, SUPPORT FROM STRUCTURE PER MANUFACTURER'S RECOMMENDATIONS. COORDINATE LOCATION WITH REFLECTED CEILING PLAN.
3. WALL CAP PROVIDED BY FAN EQUIPMENT MANUFACTURER.
4. CONDENSATE DRAIN LINE, FULL SIZE OF UNIT CONNECTION. PIPE WITH TRAP AND SLOPE 1/8" PER FOOT TO DRYWELL. REFER TO 2213-100 FOR PIPING.
5. OUTSIDE AIR INTAKE LOUVER, REFER TO ARCHITECTURAL PLANS FOR EXACT SIZE AND LOCATION. PROVIDE BIRDSCREEN.
6. PROPELLER FAN MOUNTED BEHIND LOUVER. REFER TO ARCHITECTURAL PLANS FOR EXACT SIZE ADN LOCATION OF LOUVER. PROVIDE BIRDSCREEN AND PLENUM BOX. 2334-832

RECORD DRAWINGS

Revisions Drawn By D WELLS Date JULY 2012

THESE RECORD DRAWINGS HAVE BEEN PREPARED, IN PART, ON THE BASIS OF INFORMATION COMPILED BY OTHERS. THEY ARE NOT INTENDED TO REPRESENT IN DETAIL THE EXACT LOCATION, TYPE OF COMPONENT NOR MANNER OF CONSTRUCTION. THE ENGINEER WILL NOT BE RESPONSIBLE FOR ANY ERRORS OR OMISSIONS WHICH HAVE BEEN INCORPORATED INTO THE RECORD DRAWINGS. CASSANDRA JO ANDERSON, PE 68461 IS THE ENGINEER OF RECORD FOR THE DESIGN AND CONSTRUCTION OF THIS PROJECT.

WALL MOUNT AIR CONDITIONER

23 81 00.08

TAG	LOCATION	INDOOR FAN DATA				DX COOLING DATA					ELECTRIC HEATING DATA			COMPRESSOR DATA				CONDENSER FAN DATA				UNIT ELECTRICAL DATA					MAXIMUM DIMENSIONS				MANUFACTURER	MODEL	REMARKS
		SUPPLY AIR CFM	OUTSIDE AIR CFM	EXTERNAL STATIC P IN W.G.	HP	TOTAL BTU/H	SENS. BTU/H	EAT DEG. F DB	EAT DEG. F WB	AMBIENT TEMP. DEG. F	kW	EAT DEG. F DB	STEPS	NO.	STEPS	RLA (EA)	LRA (EA)	NO.	HP (EA)	VOLT	PH	#CONN.	MCA	MOCP (FUSE)	VOLT	PH	INCHES H	INCHES W	INCHES D	MAX WEIGHT LBS			
30-ACU-1	WEST PASCO SITE ATTN BLDG	400	100	0.2	1/8	11,100	8,573	80	67	95	3	60	1	1	1	5	26.3	1	1/10	208	1	1	20	20	208	1	46	30.5	15	155	BARD	WA121-A03	A, B, C, D, E, F

REMARKS:

A: DISCONNECT BY DIV 26 ELECTRICAL
B: FRESH AIR DAMPER
C: 2 INCH DEEP PLEATED AIR FILTER SIZED TO SUIT RETURN GRILLE
D: DOUBLE DEFLECTION SUPPLY GRILLE, TITUS 272RS OR EQUAL, SIZED TO SUIT SUPPLY AIR OPENING
E: FILTER BACK RETURN GRILLE, TITUS 33RFL OR EQUAL, SIZED TO SUIT RETURN AIR OPENING
F: 7-DAY PROGRAMMABLE THERMOSTAT

FANS

23 34 00.01

TAG	LOCATION	SERVICE	TYPE	FAN DATA							SOUND DATA								ELECTRICAL DATA					MAXIMUM DIMENSIONS				MANUFACTURER	MODEL NO.	APPLICABLE REMARKS
				AIRFLOW CFM	AIRFLOW @ SP IN. WG.	SPEED RPM	DRIVE TYPE	WHEEL TYPE	WHEEL MIN DIA INCH	MAXIMUM BHP	MAX. FAN SOUND POWER LEVEL dB (RE 10^{-12} W) @ MID OCTAVE BAND FREQUENCY (Hz) 63	125	250	500	1K	2K	4K	8K	MOTOR HP	RPM	ENCLOSURE	VOLT	PH	PHYSICAL SIZE INCHES L	W	H	WEIGHT LBS.			
30-EF-1	WEST PASCO SITE ATTN BLDG	RESTROOM EXHAUST	CABINET CENTRIFUGAL	75	0.2	1209	DIRECT	FC	5.44	0.05	42	54	55	54	52	47	41	32	1/15	1280	ODP	120	1	8	9	6	100	AEROVENT	T80	A THRU F
30-EF-2	WEST PASCO SITE ATTN BLDG	STORAGE ROOM EXHAUST	WALL PROPELLER STANDARD DUTY	500	0.25	1650	DIRECT	PROP	12	0.07	79	76	71	66	63	60	55	48	1/8	1650	ODP	120	1	12	18 1/4	18.25	40	AEROVENT	TCPE 121A	A, E

REMARKS:

A: FACTORY PROVIDED DISCONNECT AND MOTOR STARTER
B: ROOF CAP WITH BIRDSCREEN, AEROVENT MODEL 611 OR EQUAL
C: CEILING GRILLE
D: FAN SWITCH TIME CONTROL SWITCH WITH "CONTINUOUS ON" OPTION
E: CORROSION PROTECTION COATING: AIR DRY EPOXY
F: FACTORY PROVIDED VIBRATION ISOLATORS

ABBREVIATIONS:
FC: FORWARD CURVED
PROP: PROPELLER
AF: AIR FOIL

NDM SERVER: GNV FILENAME: dn30M101_378217.dgn PLOT DATE: 8/3/2012 PLOT TIME: 11:21:25 AM

CH2MHILL
3011 SW WILLISTON RD.
GAINESVILLE, FLORIDA 32608
EB0000072, AAC001992
CASSANDRA JO ANDERSON PE 68461

SOLID WASTE SYSTEM
UPGRADE DESIGN
PASCO COUNTY
PASCO COUNTY, FLORIDA

MECHANICAL
WEST PASCO SITE
CITIZENS DROPOFF AREA PLAN

NO.	DATE	DR	REVISION	CHK	APVD	BY
DSGN C ANDERSON	C ANDERSON	Y FITZGERALD		G SMARR	APVD	C ANDERSON

VERIFY SCALE
BAR IS ONE INCH ON ORIGINAL DRAWING. 0 1"

DATE AUGUST 2012
PROJ 378217
DWG 30-M-101
SHEET

©CH2M HILL 2010. ALL RIGHTS RESERVED.
REUSE OF DOCUMENTS: THIS DOCUMENT, AND THE IDEAS AND DESIGNS INCORPORATED HEREIN, AS AN INSTRUMENT OF PROFESSIONAL SERVICE, IS THE PROPERTY OF CH2M HILL AND IS NOT TO BE USED, IN WHOLE OR IN PART, FOR ANY OTHER PROJECT WITHOUT THE WRITTEN AUTHORIZATION OF CH2MHILL.

RECORD DRAWINGS FOR PERMIT

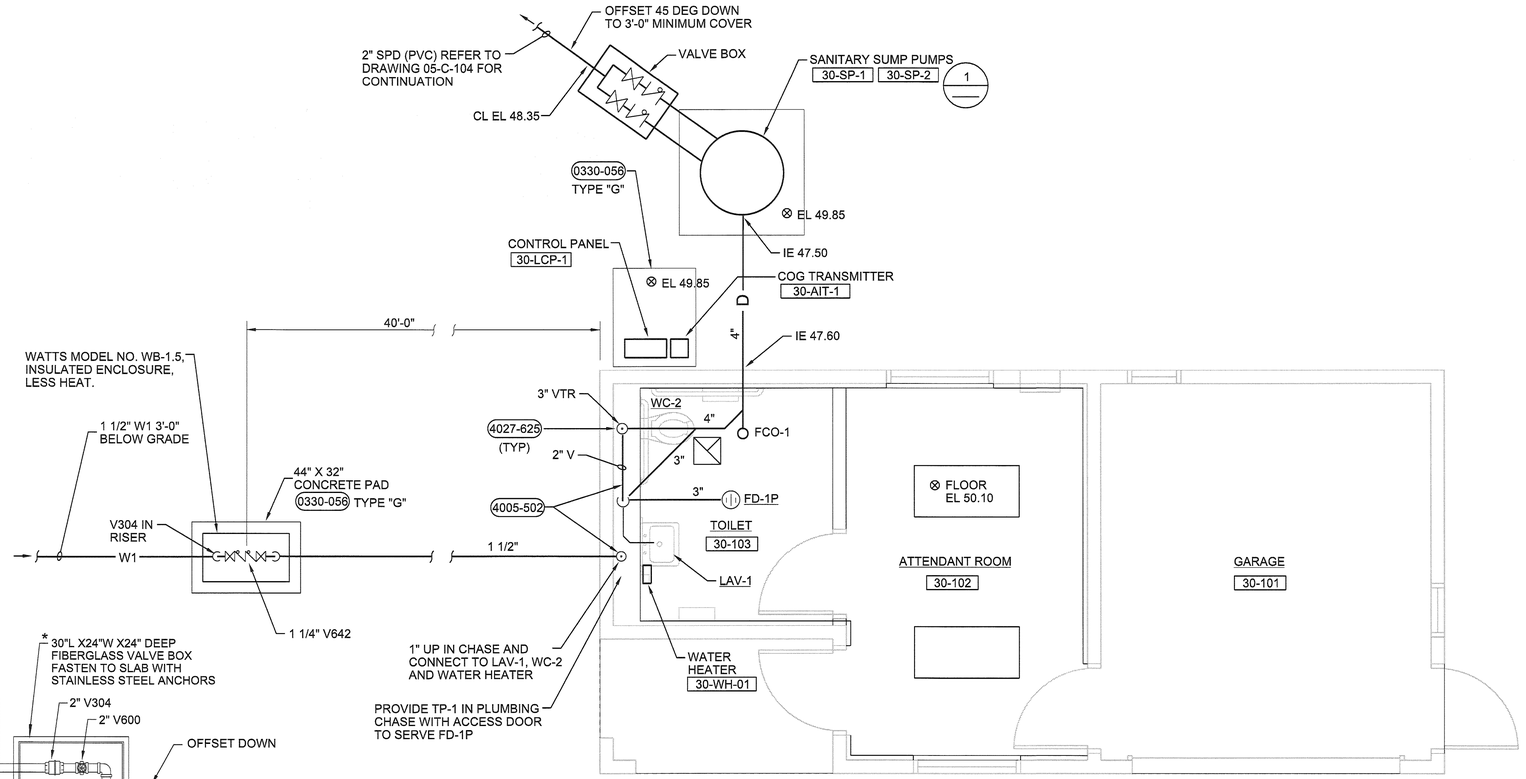

NOTE:
REFER TO DRAWING 10-P-102
FOR FIXTURE SCHEDULE.

FLOOR PLAN

3/8"=1"

Scale: 3/8 INCH = 1 FOOT

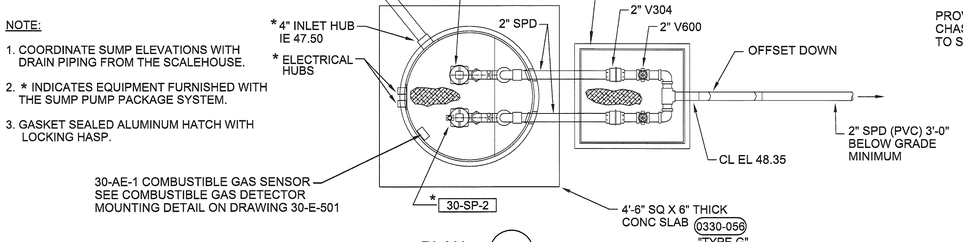

NOTE:

1. COORDINATE SUMP ELEVATIONS WITH DRAIN PIPING FROM THE SCALEHOUSE.
2. * INDICATES EQUIPMENT FURNISHED WITH THE SUMP PUMP PACKAGE SYSTEM.
3. GASKET SEALED ALUMINUM HATCH WITH LOCKING HASP.

PLAN

N

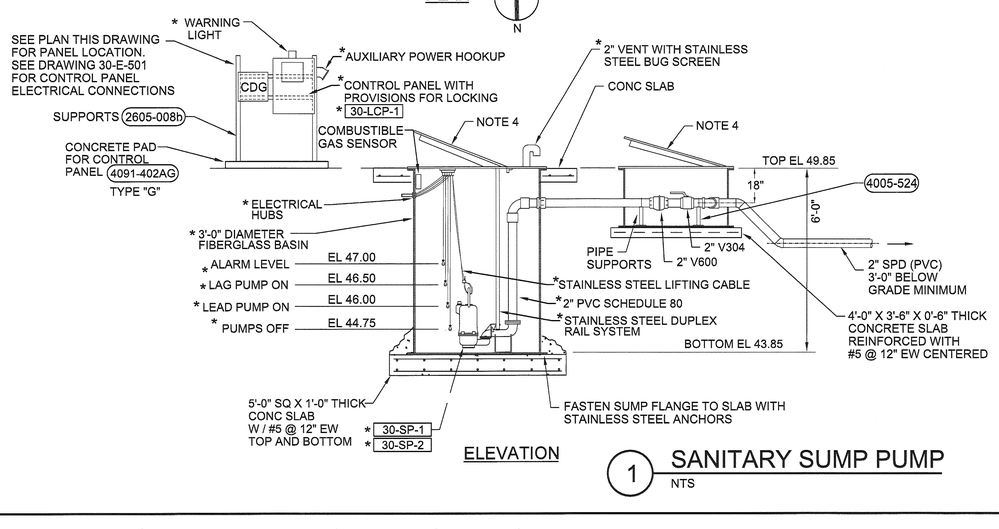

ELEVATION

1 SANITARY SUMP PUMP

NTS

RECORD DRAWINGS

Revisions Drawn By D WELLS Date JULY 2012

THESE RECORD DRAWINGS HAVE BEEN PREPARED, IN PART, ON THE BASIS OF INFORMATION COMPILED BY OTHERS. THEY ARE NOT INTENDED TO REPRESENT IN DETAIL THE EXACT LOCATION, TYPE OF COMPONENT NOR MANNER OF CONSTRUCTION. THE ENGINEER WILL NOT BE RESPONSIBLE FOR ANY ERRORS OR OMISSIONS WHICH HAVE BEEN INCORPORATED INTO THE RECORD DRAWINGS. CASSANDRA JO ANDERSON, PE 68461 IS THE ENGINEER OF RECORD FOR THE DESIGN AND CONSTRUCTION OF THIS PROJECT.

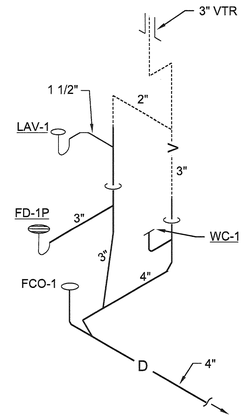

RISER DIAGRAM

3/8"=1"

3011 SW WILLISTON RD
GAINESVILLE, FLORIDA 32608
EB0000072 AAC001992
Cassandra Jo Anderson PE 68461

SOLID WASTE SYSTEM
UPGRADE DESIGN
PASCO COUNTY
PASCO COUNTY, FLORIDA

CH2MHILL

PLUMBING
WEST PASCO SITE
CITIZEN DROP OFF ATTENDANT BUILDING
FLOOR PLAN

NO.	DATE	DSGN	DR	CHK	APVD
		R BURNS	R BURNS	G SMARR	C ANDERSON

REVISION BY APVD

VERIFY SCALE

BAR IS ONE INCH ON ORIGINAL DRAWING. 0 1"

DATE	AUGUST 2012
PROJ	378217
DWG	30-P-101
SHEET	

REUSE OF DOCUMENTS: THIS DOCUMENT, AND THE IDEAS AND DESIGNS INCORPORATED HEREIN, AS AN INSTRUMENT OF PROFESSIONAL SERVICE, IS THE PROPERTY OF CH2M HILL AND IS NOT TO BE USED, IN WHOLE OR IN PART, FOR ANY OTHER PROJECT WITHOUT THE WRITTEN AUTHORIZATION OF CH2MHILL.

©CH2M HILL 2010. ALL RIGHTS RESERVED.

RECORD DRAWINGS FOR PERMIT

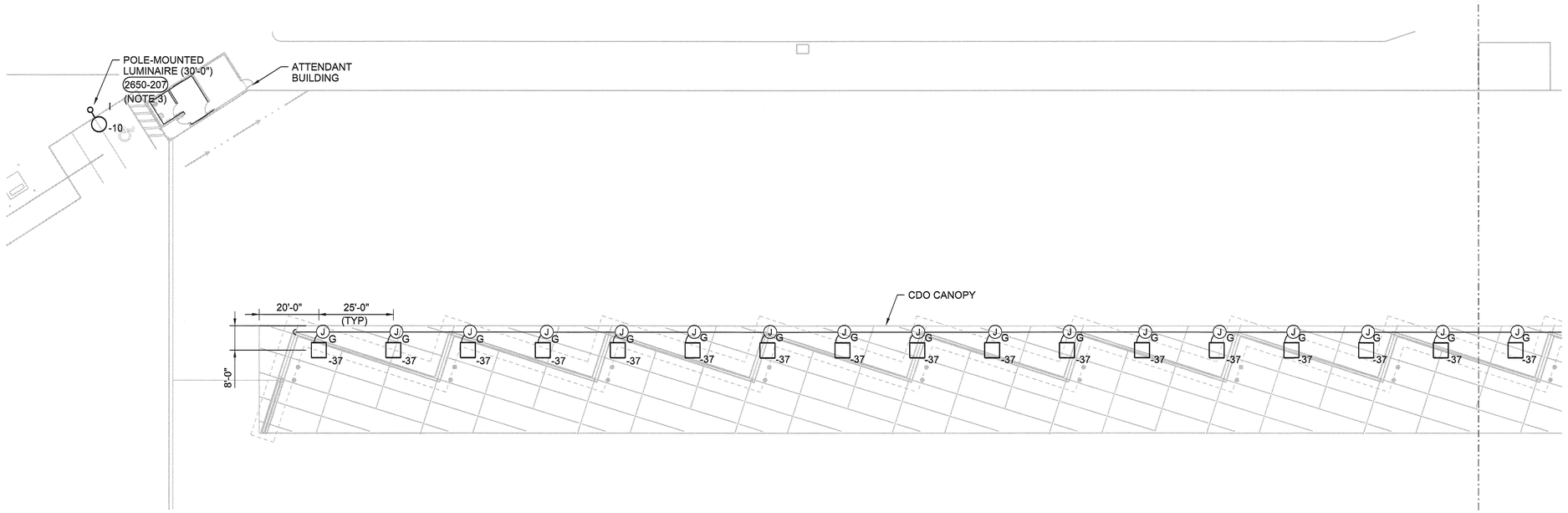

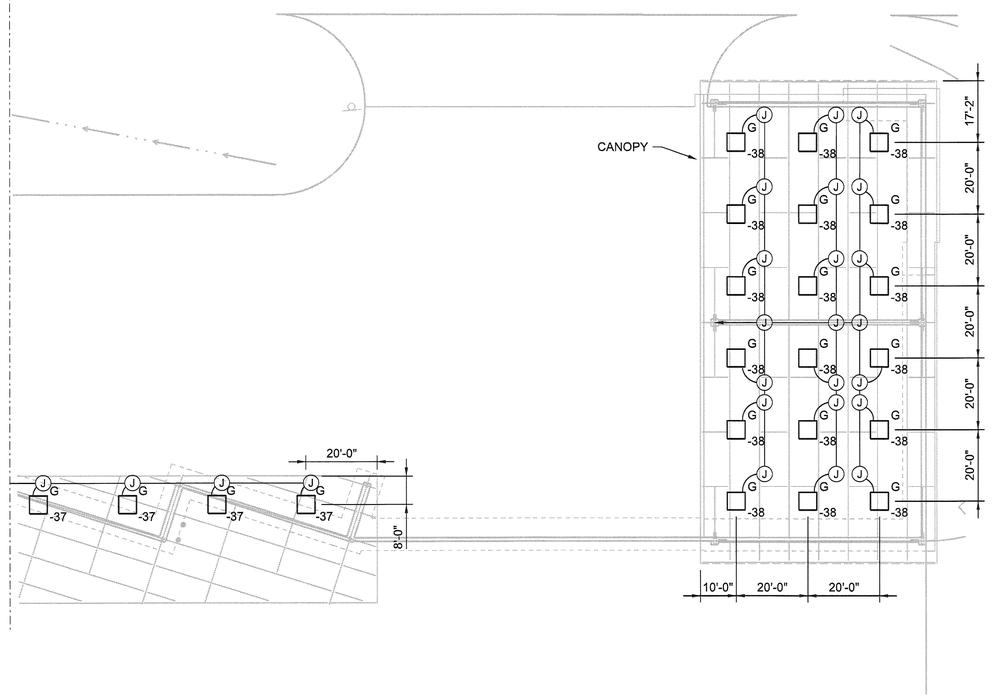

CANOPY LIGHTING PLAN

1"=20'-0"

NOTES:

1. COORDINATE WITH ROOFING CONTRACTOR FOR THE INSTALLATION OF CANOPY MOUNTED LUMINAIRES AND BRANCH CIRCUIT CONDUIT. ROUTE ALL CONDUIT IN-LINE WITH THE LUMINAIRES.
2. LUMINAIRE SPACING DIMENSIONS SHOWN ARE TO BE TAKEN FROM THE CENTERLINE OF THE LUMINAIRE.
3. TYPE I ROADWAY LUMINAIRE IS POWERED FROM LIGHTING PANEL 30-LP-1. ALL OTHER CANOPY LUMINAIRES ARE POWERED FROM POWER PANEL 30-PP-1.
4. DURING FACILITY OPERATING HOURS, CANOPY LIGHTING SHALL AUTOMATICALLY TURN ON WHEN AMBIENT LIGHT FALLS BELOW A PREDETERMINED LEVEL SET BY OWNER. CANOPY LIGHTS SHALL THEN AUTOMATICALLY SHUT OFF AFTER A PREDETERMINED TIME, SET BY OWNER. ELECTRICAL CONTRACTOR SHALL BE RESPONSIBLE FOR ALL ADJUSTMENTS NECESSARY TO ACHIEVE DEISRED OPERATION. FOR TYPICAL LIGHTING CONTROLLER WIRING DIAGRAM, REFER TO EXTERIOR LIGHTING CONTACTOR 30LC-1 DIAGRAM DETAIL, DRAWING 30-E-501.
5. REFER TO LUMINAIRE SCHEDULE, DRAWING 00-G-008.
6. SUBMIT A DETAILED CONDUIT LAYOUT DRAWING FOR EACH CANOPY LIGHTING SYSTEM BEFORE INSTALLING CONDUIT ON CANOPY.

RECORD DRAWINGS

Revisions Drawn By D WELLS Date 7/16/12

THESE RECORD DRAWINGS HAVE BEEN PREPARED, IN PART, ON THE BASIS OF INFORMATION COMPILED BY OTHERS. THEY ARE NOT INTENDED TO REPRESENT IN DETAIL THE EXACT LOCATION, TYPE OF COMPONENT NOR MANNER OF CONSTRUCTION. THE ENGINEER WILL NOT BE RESPONSIBLE FOR ANY ERRORS OR OMISSIONS WHICH HAVE BEEN INCORPORATED INTO THE RECORD DRAWINGS.

N

0 20 40 60

1"=20'-0"

DAVID C. NICHOLSON ★ PROFESSIONAL ENGINEER ★ LICENSE No 66901 ★ STATE OF FLORIDA

NO.	DATE	REVISION	BY
DSGN	J LEWIS		
DR	J LEWIS	CHK M GOSLOW	APVD D NICHOLSON

©CH2M HILL 2010. ALL RIGHTS RESERVED.

3011 SW WILLISTON RD
GAINESVILLE, FLORIDA 32608
EB0000072 AAC001992
DAVID C NICHOLSON PE 60201

SOLID WASTE SYSTEM
UPGRADE DESIGN
PASCO COUNTY
PASCO COUNTY, FLORIDA

CH2MHILL

ELECTRICAL
WEST PASCO SITE
CITIZEN DROP OFF AREA
LIGHTING PLAN

VERIFY SCALE

BAR IS ONE INCH ON ORIGINAL DRAWING.
0 1"

DATE	AUGUST 2012
PROJ	378217
DWG	30-E-101
SHEET	

REUSE OF DOCUMENTS: THIS DOCUMENT, AND THE IDEAS AND DESIGNS INCORPORATED HEREIN, AS AN INSTRUMENT OF PROFESSIONAL SERVICE, IS THE PROPERTY OF CH2M HILL AND IS NOT TO BE USED, IN WHOLE OR IN PART, FOR ANY OTHER PROJECT WITHOUT THE WRITTEN AUTHORIZATION OF CH2MHILL.

RECORD DRAWINGS FOR PERMIT

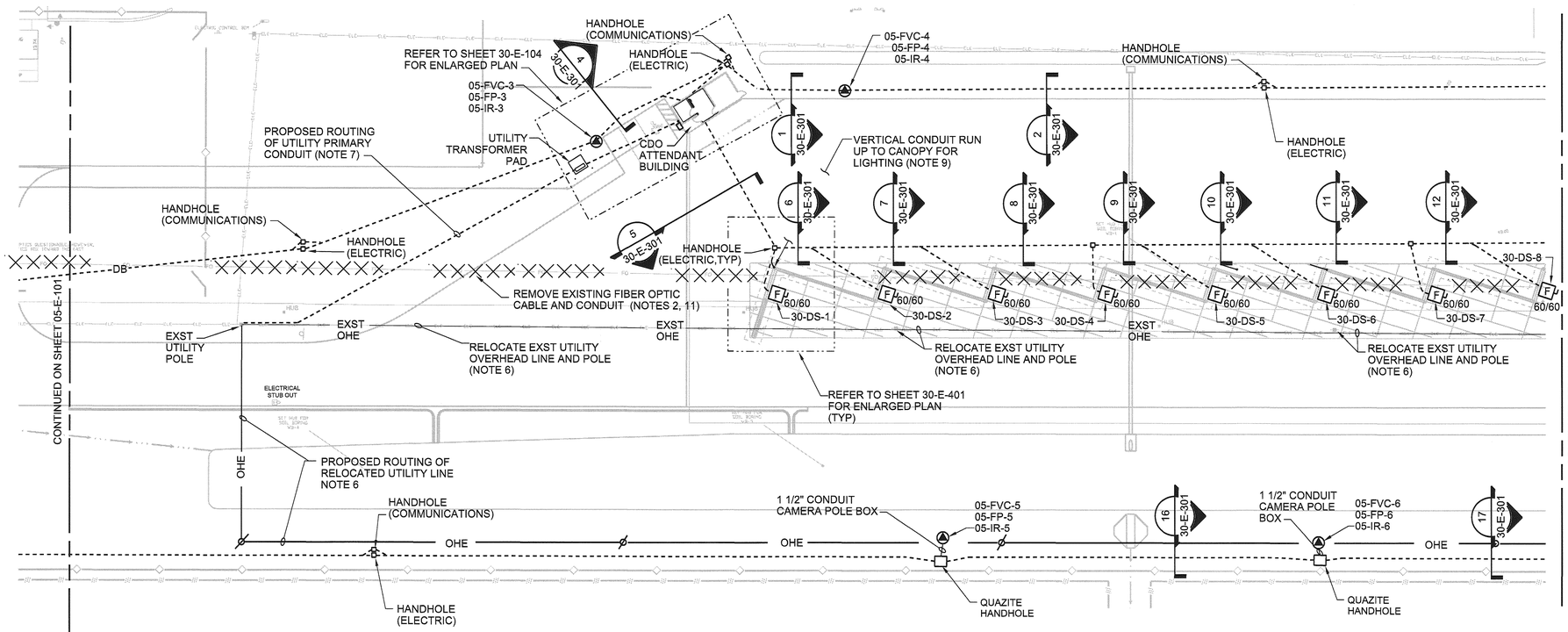

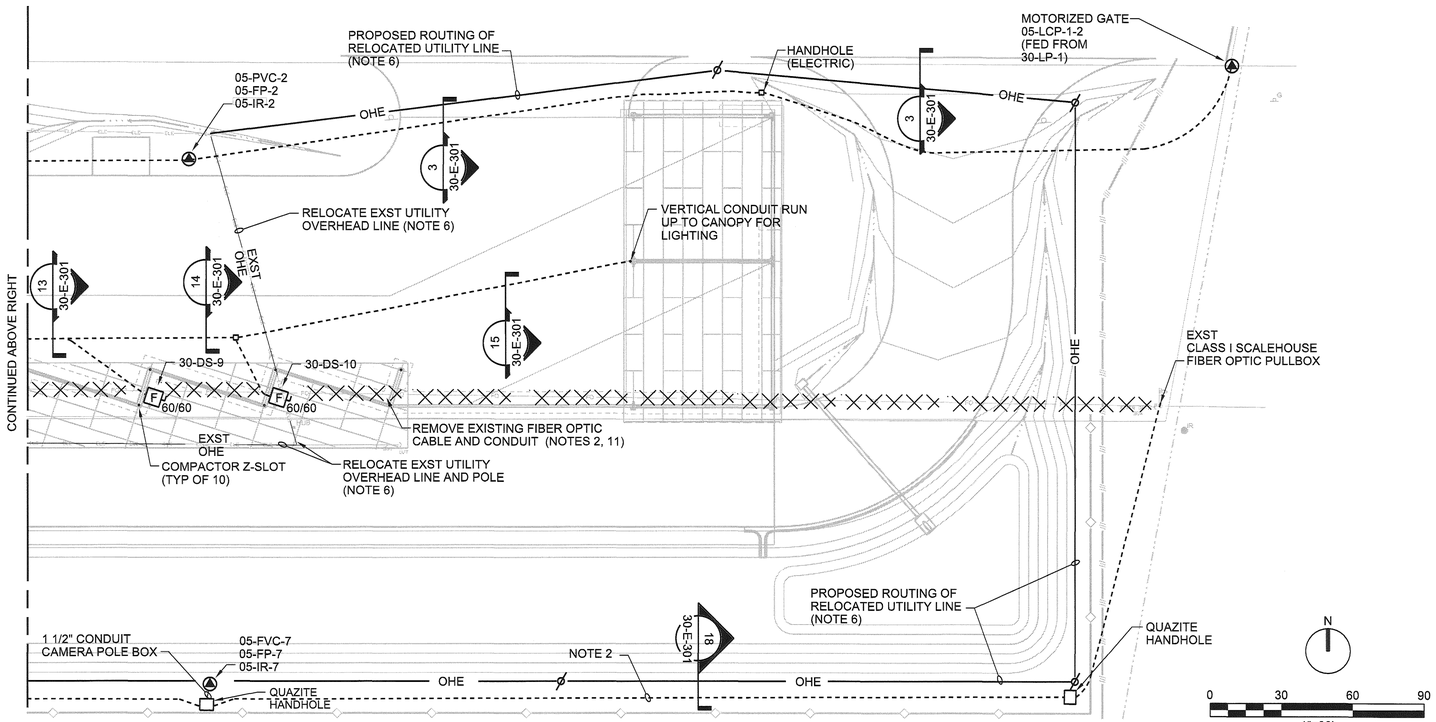

NOTES:

1. ALL CONDUITS INSTALLED UNDER ROADS OR OTHER TRAFFIC AREAS SHALL BE CONCRETE ENCASED PER DETAIL (2605-400b) (2605-400c) . THE CONCRETE ENCASEMENT SHALL EXTEND 10 FEET PAST THE ROAD OR TRAFFIC AREA.
2. INSTALL NEW DUCT BANK FROM EXISTING CLASS III SCALEHOUSE AND EXISTING CLASS I SCALEHOUSE PULLBOX, INSTALL NEW FIBER OPTIC CABLE BEFORE REMOVAL OF EXISTING FIBER OPTIC CABLE PER NOTE 11. REFER TO DRAWING 90-D-104 FOR ADDITIONAL REQUIREMENTS.
3. SUBMIT A DETAILED CONDUIT LAYOUT DRAWING FOR EACH CANOPY LIGHTING SYSTEM BEFORE INSTALLING CONDUIT ON CANOPY.
4. PROVIDE EACH FUSED DISCONNECT SWITCH WITH A NEMA 4X, 316 STAINLESS STEEL ENCLOSURE.
5. REFER TO SHEET 90-D-102 FOR CDO POLE-MOUNTED CAMERA LOCATIONS AND DETAILS.
6. COORDINATE WITH WREC TO RELOCATE THE OVERHEAD UTILITY LINE AND POLES FOR THE INSTALLATION OF THE NEW CITIZEN DROP OFF AREA.
7. COORDINATE WITH WREC TO PROVIDE NEW SERVICE TO THE ATTENDANT BUILDING. REFER TO DRAWING 05-E-101 FOR INFORMATION ON WREC STANDARDS FOR PROVIDING NEW ELECTRICAL SERVICE.
8. PROVIDE AND INSTALL POWER CONDUCTORS FROM 30-PP-1 TO EACH FUSED DISCONNECT SHOWN AS PER PANELBOARD SCHEDULE. CONNECT BETWEEN STATIONARY COMPACTORS AND DISONNECT SWITCHES SHALL BE PERFORMED BY OTHERS.
9. REFER TO DRAWING 30-E-501 FOR DETAILS ON CANOPY LIGHT CIRCUIT RACEWAY INSTALLATION AT Z-SLOTS.
10. FIELD CAMERA PANELS SHALL BE USED AS PULL-POINTS FOR CABLES IN DUCTBANKS. COORDINATE WITH PANEL ENCLOSURE MANUFACTURER TO ENSURE CONDUIT BOSSING PROVIDED IS SATISFACTORY FOR INCOMING CONDUIT SIZES AND QUANTITIES.
11. PULL EXISTING FIBER OPTIC CABLE BACK TO EXISTING CLASS I SCALEHOUSE PULLBOX AND RE-ROUTE TO FIELD CAMERA PANEL 05-FP-7 AND ABANDON EXISTING CONDUIT TO DEMOLITION.
12. ROUTE #4/0 BARE STRANDED TIN-PLATED COPPER GROUND WIRE WITH ALL DUCT BANKS, CONNECT TO HANDHOLE GROUND RODS.

RECORD DRAWINGS

Revisions Drawn By D WELLS Date 7/16/12

THESE RECORD DRAWINGS HAVE BEEN PREPARED, IN PART, ON THE BASIS OF INFORMATION COMPILED BY OTHERS. THEY ARE NOT INTENDED TO REPRESENT IN DETAIL THE EXACT LOCATION, TYPE OF COMPONENT NOR MANNER OF CONSTRUCTION. THE ENGINEER WILL NOT BE RESPONSIBLE FOR ANY ERRORS OR OMISSIONS WHICH HAVE BEEN INCORPORATED INTO THE RECORD DRAWINGS.

DAVID C NICHOLSON LICENSE NO. 60201 STATE OF FLORIDA PROFESSIONAL ENGINEER

NO.	DATE	DSGN	DR	CHK	APVD	BY	APVD
REVISION		J LEWIS	J LEWIS	M GOSLOW		D NICHOLSON	

©CH2M HILL 2010. ALL RIGHTS RESERVED.
THE IDEAS AND DESIGNS INCORPORATED HEREIN, AS AN INSTRUMENT OF PROFESSIONAL SERVICE, IS THE PROPERTY OF CH2M HILL AND IS NOT TO BE USED, IN WHOLE OR IN PART, FOR ANY OTHER PROJECT WITHOUT THE WRITTEN AUTHORIZATION OF CH2MHILL.

3011 SW WILLISTON RD
GAINESVILLE, FLORIDA 32608
EB00000072 AAC001992
DAVID C NICHOLSON PE 60201

SOLID WASTE SYSTEM
UPGRADE DESIGN
PASCO COUNTY
PASCO COUNTY, FLORIDA

CH2MHILL

ELECTRICAL
WEST PASCO SITE
CITIZEN DROP OFF AREA
POWER PLAN

REUSE OF DOCUMENTS: THIS DOCUMENT, AND THE IDEAS AND DESIGNS INCORPORATED HEREIN, AS AN INSTRUMENT OF PROFESSIONAL SERVICE, IS THE PROPERTY OF CH2M HILL AND IS NOT TO BE USED, IN WHOLE OR IN PART, FOR ANY OTHER PROJECT WITHOUT THE WRITTEN AUTHORIZATION OF CH2MHILL.

RECORD DRAWINGS FOR PERMIT

VERIFY SCALE
BAR IS ONE INCH ON ORIGINAL DRAWING.
0 1"

DATE	AUGUST 2012
PROJ	378217
DWG	30-E-102
SHEET	

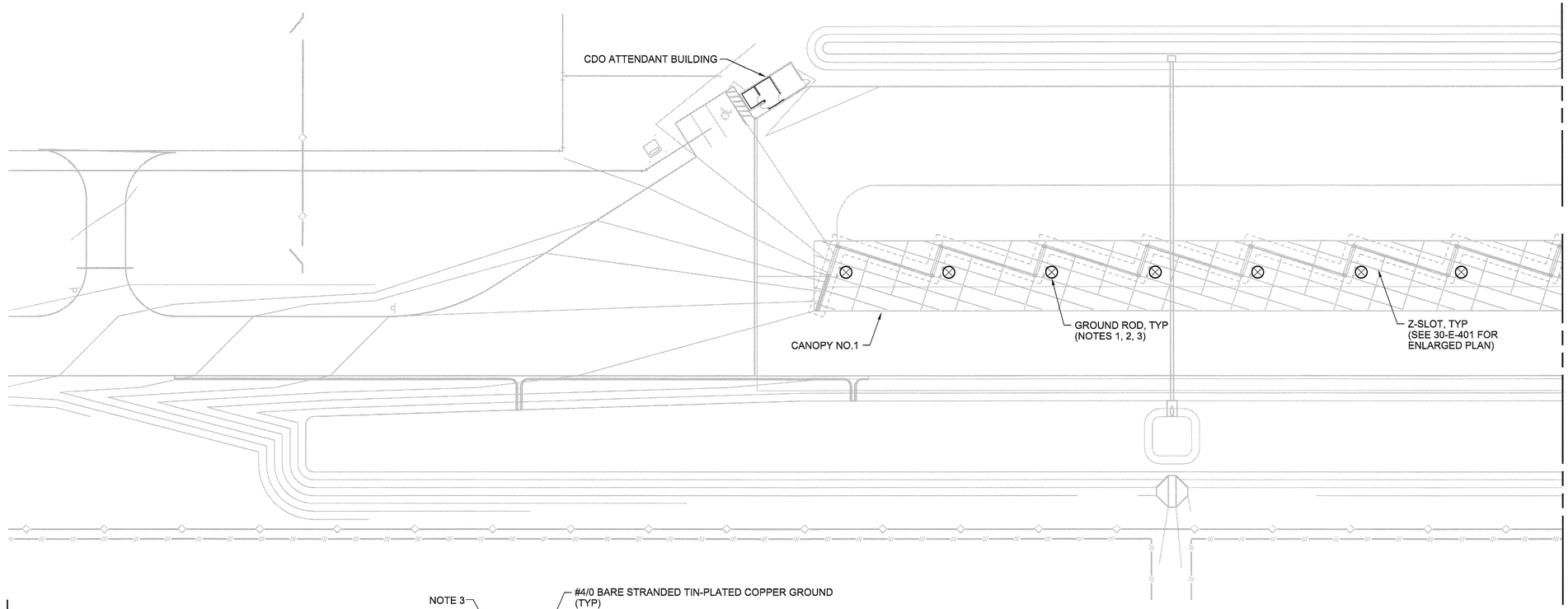

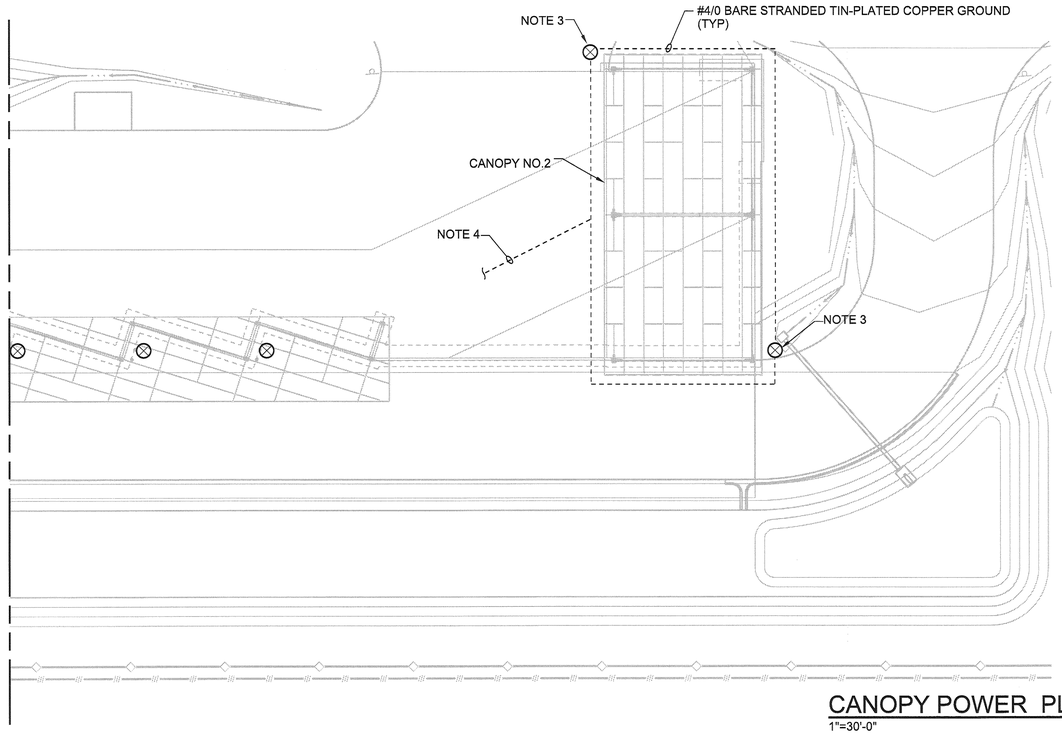

CANOPY POWER PLAN

1"=30'-0"

NOTES:

1. INSTALL ONE 3/4"X10'-0" GROUND ROD NEXT TO EACH DISCONNECT SWITCH AT EACH Z-SLOT. CONNECT GROUND BAR IN EACH DISCONNECT SWITCH TO GROUND ROD USING #2 BARE, STRANDED, TIN-PLATED COPPER GROUNDING CONDUCTOR.
2. CONNECT DUCT BANK GROUNDING CONDUCTOR TO GROUND ROD.
3. CONNECT GROUND ROD TO CANOPY STRUCTURAL STEEL WITH #4/0 BARE, STRANDED TIN-PLATED COPPER GROUND WIRE.
4. ROUTE GROUNDING ELECTRODE CONDUCTOR WITH DUCTBANK AND CONNECT TO HANDHOLE GROUND RODS.
5. PROVIDE A LIGHTING PROTECTION SYSTEM FOR THE ATTENDANT BUILDING, CANOPY NO.1, AND CANOPY NO.2 PER SPECIFICATION SECTION 26 41 00, FACILITY LIGHTING PROTECTION.

RECORD DRAWINGS

Revisions Drawn By D WELLS Date 7/16/12

THESE RECORD DRAWINGS HAVE BEEN PREPARED, IN PART, ON THE BASIS OF INFORMATION COMPILED BY OTHERS. THEY ARE NOT INTENDED TO REPRESENT IN DETAIL THE EXACT LOCATION, TYPE OF COMPONENT NOR MANNER OF CONSTRUCTION. THE ENGINEER WILL NOT BE RESPONSIBLE FOR ANY ERRORS OR OMISSIONS WHICH HAVE BEEN INCORPORATED INTO THE RECORD DRAWINGS.

N

0 30 60 90

1"=30'-0"

DAVID C. NICHOLSON LICENSE No. 60201 STATE OF FLORIDA PROFESSIONAL ENGINEER

NO.	DATE	REVISION	BY	APVD

DSGN J LEWIS | DR J LEWIS | CHK M GOSLOW | APVD D NICHOLSON

3011 SW WILLISTON RD
GAINESVILLE, FLORIDA 32608
EB0000072 AAC001992
DAVID C NICHOLSON PE 60201

SOLID WASTE SYSTEM
UPGRADE DESIGN
PASCO COUNTY
PASCO COUNTY, FLORIDA

CH2MHILL

ELECTRICAL
WEST PASCO SITE
CITIZEN DROP OFF AREA
POWER PLAN

VERIFY SCALE
BAR IS ONE INCH ON ORIGINAL DRAWING.
0 1"

DATE	AUGUST 2012
PROJ	378217
DWG	30-E-103
SHEET	

REUSE OF DOCUMENTS: THIS DOCUMENT, AND THE IDEAS AND DESIGNS INCORPORATED HEREIN, AS AN INSTRUMENT OF PROFESSIONAL SERVICE, IS THE PROPERTY OF CH2M HILL AND IS NOT TO BE USED, IN WHOLE OR IN PART, FOR ANY OTHER PROJECT WITHOUT THE WRITTEN AUTHORIZATION OF CH2MHILL.
©CH2M HILL 2010. ALL RIGHTS RESERVED.

RECORD DRAWINGS FOR PERMIT

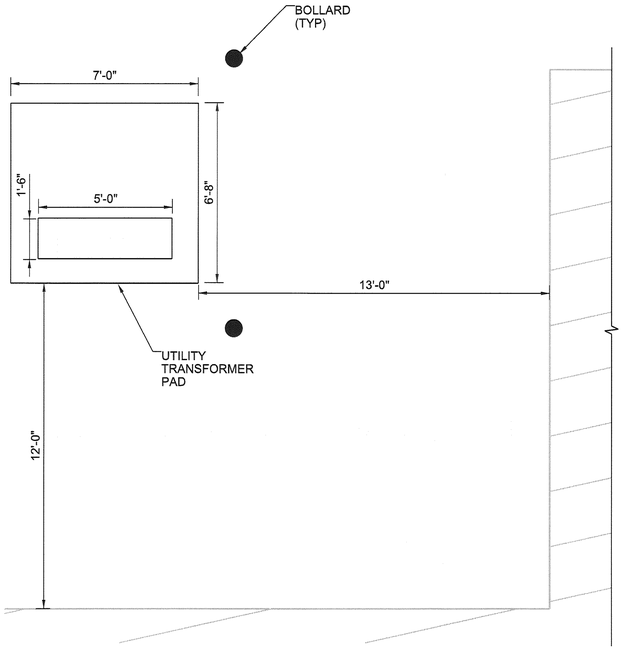

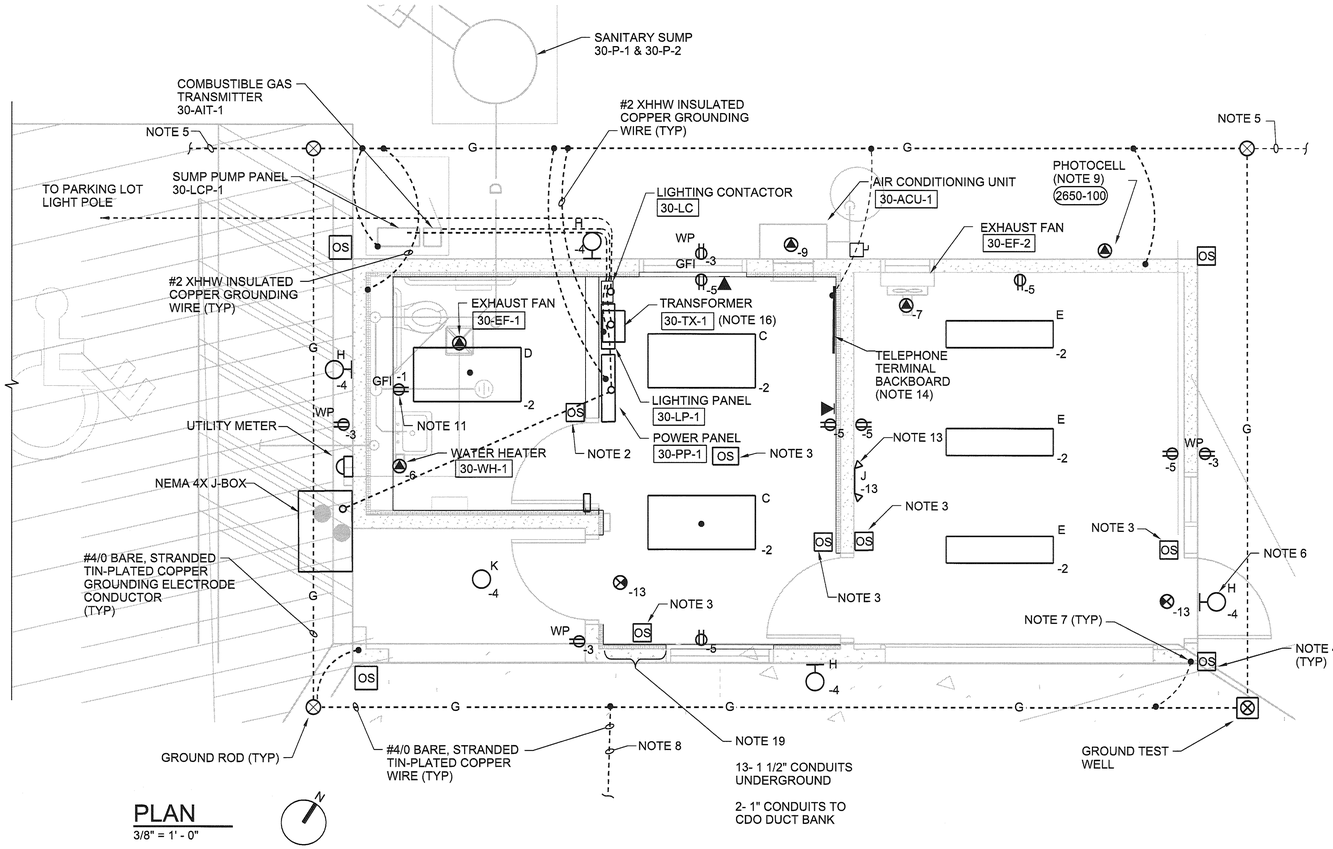

PLAN
3/8" = 1' - 0"

NOTES:

1. ELECTRICAL CONTRACTOR SHALL BE RESPONSIBLE FOR INSTALLING A COMPLETE AMBIENT LIGHTS SENSING AND FULLY FUNCTIONAL OCCUPANCY SENSOR CONTROLLED LIGHTING SYSTEM. RESPONSIBILITIES SHALL INCLUDE TESTING, TIMER, RANGE, POSITION, AND ANY OTHER ADJUSTMENTS REQUIRED TO ACHIEVE PERFORMANCE DESIRED BY THE OWNER. COORDINATE THIS EFFORT WITH OWNER.
2. PROVIDE AND INSTALL WALL-MOUNTED PASSIVE INFRA RED OCCUPANCY SENSOR 4'-0" ABOVE FINISHED FLOOR. USE WATT STOPPER MODEL WS-250-W. 30-EF-1 TO BE CONTROLLED BY THIS OCCUPANCY SENSOR.
3. PROVIDE WALL MOUNTED PASSIVE INFRA-RED/ULTRASONIC MULTI-WAY OCCUPANCY SENSOR, WATTSTOPPER MODEL DW-205-W. MOUNT AT 4'-0" ABOVE FINISHED FLOOR.
4. PROVIDE AND INSTALL EXTERIOR PASSIVE INFRA-RED OCCUPANCY SENSOR, WATT STOPPER MODEL EW-200-120, AT ROOF LEVEL, AS SHOWN. OCCUPANCY SENSOR SHALL BE UL-LISTED FOR OUTDOOR USE. WIRE EXTERIOR OCCUPANCY SENSORS IN PARALLEL SUCH TRIPPING ANY SINGLE SENSOR WILL TURN ON ALL BUILDING EXTERIOR LUMINAIRES. SEE BUILDING EXTERIOR LIGHTING CONTACTOR 30LC CONTROL DIAGRAM DETAIL ON DRAWING 30-E-501.
5. ROUTE GROUNDING ELECTRODE CONDUCTOR WITH DUCT BANK AND CONNECT TO HANDHOLE GROUND RODS.
6. MOUNT BUILDING EXTERIOR LIGHTS WITH CENTER OF LUMINAIRE AT 9'-6" AFG.
7. BOND BUILDING STRUCTURAL STEEL/FOOTER TO BUILDING GROUNDING LOOP.
8. ROUTE GROUNDING ELECTRODE CONDUCTOR WITH CANOPY LIGHTING AND COMPACTOR DUCTBANK AND BOND WITH CANOPY GROUNDING LOOP. SEE SHEET 30-E-102 FOR CONTINUATION. BOND GROUNDING ELECTRODE CONDUCTORS TO HANDHOLE GROUND RODS.
9. MOUNT PHOTOCELL ON ROOF OF BUILDING. PHOTOCELL SHALL FACE THE NORTH. SEE BUILDING EXTERIOR LIGHTING CONTACTOR 30LC CONTROL DIAGRAM ON DRAWING 30-E-501.
10. CONTRACTOR SHALL BE RESPONSIBLE FOR DESIGNING A FULLY FUNCTIONAL PHOTOCELL SENSOR CONTROLLED EXTERIOR LIGHTING SYSTEM AS SHOWN. COORDINATE WITH OWNER TO DETERMINE SENSOR TIMER SETTINGS AND ANY OTHER REQUIRED ADJUSTMENTS NECESSARY TO ACHIEVE THE SYSTEM PERFORMANCE DESIRED BY OWNER.
11. RECESS MOUNT RECEPTACLE 4'-0" ABOVE FINISHED FLOOR.
12. EMERGENCY LIGHTING AND EXIT SIGNS SHALL BE WIRED TO THE NORMAL LIGHTING CIRCUIT OF THE ROOM IT SERVES AND TO THE LINE SIDE OF THE LIGHT SWITCH OR OCCUPANCY SENSOR.
13. MOUNT EMERGENCY LIGHT 8'-0" ABOVE FINISHED FLOOR. MEASURE HEIGHT FROM BOTTOM OF UNIT.
14. REFER TO 30-A-101 FOR ADDITIONAL TELEPHONE TERMINAL BOARD REQUIREMENTS.
15. REFER TO SHEET 05-E-101 FOR WREC REQUIREMENTS FOR NEW ELECTRICAL SERVICE INSTALLATION.
16. MOUNT TRANSFORMER 30-TX-1 ABOVE CEILING.
17. SANITARY SUMP WET WELL AND THE AREA WITHIN 3 FEET RADIUS AROUND ALL VENTS ARE A CLASS I, DIV I, GROUP D HAZARDOUS LOCATION PER NFPA 820 TABLE 4.2-16-A. PROVIDE SUITABLE WIRING METHODS AND MATERIALS FOR HAZARDOUS LOCATIONS PER NFPA 70 (NEC).
18. THE AREA WITHIN 5 FEET RADIUS AROUND ALL VENTS TO THE SANITARY SUMP WET WELL AND AN AREA 18 INCHES ABOVE AND 10 FEET FROM ALL WET WELL HATCHES ARE CLASS I, DIV 2, GROUP D HAZARDOUS LOCATIONS PER FNPA 820, TABLE 4.2-16.A. PROVIDE SUITABLE WIRING METHOLDS AND MATERIALS FOR HAZARDOUS LOCATION PER NFPA 70 (NEC).
19. CONDUITS ENTER STRUCTURE IN THIS LOCATION.

RECORD DRAWINGS

Revisions Drawn By D WELLS Date 7/16/12

THESE RECORD DRAWINGS HAVE BEEN PREPARED, IN PART, ON THE BASIS OF INFORMATION COMPILED BY OTHERS. THEY ARE NOT INTENDED TO REPRESENT IN DETAIL THE EXACT LOCATION, TYPE OF COMPONENT NOR MANNER OF CONSTRUCTION. THE ENGINEER WILL NOT BE RESPONSIBLE FOR ANY ERRORS OR OMISSIONS WHICH HAVE BEEN INCORPORATED INTO THE RECORD DRAWINGS.

DAVID C. NICHOLSON LICENSE No. 60201 STATE OF FLORIDA PROFESSIONAL ENGINEER

NO.	DATE	DSGN	REVISION	CHK	BY	APVD
		J LEWIS	DR	J LEWIS	M GOSLOW	APVD D NICHOLSON

©CH2M HILL 2010. ALL RIGHTS RESERVED.
REUSE OF DOCUMENTS: THIS DOCUMENT, AND THE IDEAS AND DESIGNS INCORPORATED HEREIN, AS AN INSTRUMENT OF PROFESSIONAL SERVICE, IS THE PROPERTY OF CH2M HILL AND IS NOT TO BE USED, IN WHOLE OR IN PART, FOR ANY OTHER PROJECT WITHOUT THE WRITTEN AUTHORIZATION OF CH2MHILL.

3011 SW WILLISTON RD
GAINESVILLE, FLORIDA 32608
EB0000072 AAC001992
DAVID C NICHOLSON PE 60201

SOLID WASTE SYSTEM
UPGRADE DESIGN
PASCO COUNTY
PASCO COUNTY, FLORIDA

CH2MHILL

ELECTRICAL
WEST PASCO SITE
CITIZEN DROP OFF ATTENDANT BUILDING
POWER AND LIGHTING PLAN

RECORD DRAWINGS FOR PERMIT

VERIFY SCALE
BAR IS ONE INCH ON ORIGINAL DRAWING. 0 1"

DATE	AUGUST 2012
PROJ	378217
DWG	30-E-104
SHEET	

1 DUCT BANK SECTION
NTS

2 DUCT BANK SECTION
NTS

3 DUCT BANK SECTION
NTS

4 DUCT BANK SECTION
NTS

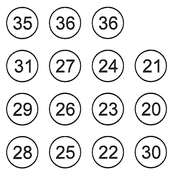

5 DUCT BANK SECTION
NTS

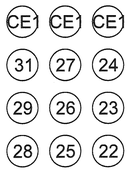

6 DUCT BANK SECTION
NTS

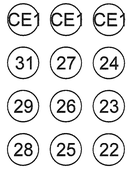

7 DUCT BANK SECTION
NTS

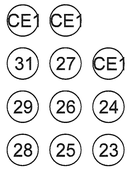

8 DUCT BANK SECTION
NTS

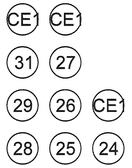

9 DUCT BANK SECTION
NTS

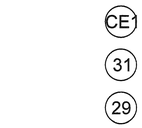

10 DUCT BANK SECTION
NTS

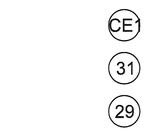

11 DUCT BANK SECTION
NTS

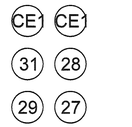

12 DUCT BANK SECTION
NTS

13 DUCT BANK SECTION
NTS

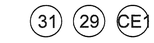

14 DUCT BANK SECTION
NTS

15 DUCT BANK SECTION
NTS

16 DUCT BANK SECTION
NTS

17 DUCT BANK SECTION
NTS

18 DUCT BANK SECTION
NTS

RECORD DRAWINGS

Revisions Drawn By D WELLS Date 7/16/12

THESE RECORD DRAWINGS HAVE BEEN PREPARED, IN PART, ON THE BASIS OF INFORMATION COMPILED BY OTHERS. THEY ARE NOT INTENDED TO REPRESENT IN DETAIL THE EXACT LOCATION, TYPE OF COMPONENT NOR MANNER OF CONSTRUCTION. THE ENGINEER WILL NOT BE RESPONSIBLE FOR ANY ERRORS OR OMISSIONS WHICH HAVE BEEN INCORPORATED INTO THE RECORD DRAWINGS.

DUCTBANK CIRCUIT SCHEDULE (WEST PASCO)

CKT. NO.	TO (DESTINATION)	FROM (SOURCE)	CONDUIT TRADE SIZE	CONDUCTORS	REMARKS
1	05-LCP-1-1 MOTORIZED CANTILEVER SLIDE GATE	10-LP-1	1"	208V POWER	
2	05-FP-2,(3),(4) FIELD CAMERA PANELS	10-LP-1	1"	120V POWER	
3	05-FP-5,(6),(7) FIELD CAMERA PANELS	10-LP-1	1"	120V POWER	
4	05-FP-3, 05-FP-5 FIELD CAMERA PANELS, CLASS III SCALEHOUSE	10-CP-1	4"	FIBER OPTIC CABLE	NOTES 1, 2
5	05-FP-3, 05-FP-5 FIELD CAMERA PANELS	10-CP-1	4"	FIBER OPTIC CABLE	NOTES 1, 2
6	CLASS III SCALEHOUSE NETWORK EQT.	10-CP-1, 05-FP-7	2"	FIBER OPTIC CABLE	NOTES 1, 2
7	05-FP-2,(4) FIELD CAMERA PANELS	10-LP-1	1"	120V POWER	
8	05-FP-4 FIELD CAMERA PANEL	05-FP-3	4"	FIBER OPTIC CABLE	NOTES 1, 2
8A	05-FP-3 FIELD CAMERA PANEL	10-CP-1	4"	FIBER OPTIC CABLE	NOTES 1, 2
9	05-FP-2 FIELD CAMERA PANEL	10-CP-1	1"	120V POWER	
10	05-FP-2 FIELD CAMERA PANEL	05-FP-4	4"	FIBER OPTIC CABLE	NOTES 1, 2
11	05-FP-5, 05-FP-7 FIELD CAMERA PANELS	10-CP-1, CLASS III SCALEHOUSE	4"	FIBER OPTIC CABLE	NOTES 1, 2
12	05-FP-6, 05-FP-7 FIELD CAMERA PANELS	10-LP-1	1"	120V POWER	
13	05-FP-6, 05-FP-7 FIELD CAMERA PANELS	05-FP-5, CLASS III SCALEHOUSE	4"	FIBER OPTIC CABLE	NOTES 1, 2
14	05-FP-7 FIELD CAMERA PANEL	10-CP-1	1"	120V POWER	
15	05-FP-7 FIELD CAMERA PANEL	05-FP-6, CLASS III SCALEHOUSE	4"	FIBER OPTIC CABLE	NOTES 1, 2
16	10-CP-1 NETWORK RACK, ATTENDANT BUILDING	TELCO DEMARC	2"	EMPTY	NOTE 4
17	10-CP-1 NETWORK RACK	TELCO DEMARC	2	EMPTY	NOTE 4
18	ATTENDANT BUILDING	TELCO DEMARC	2"	EMPTY	NOTE 4
19	NOT USED		-		
20	30-DS-1 COMPACTOR #1	30-PP-1	1.5"	480V POWER	
21	30-DS-2 COMPACTOR #2	30-PP-1	1.5"	480V POWER	
22	30-DS-3 COMPACTOR #3	30-PP-1	1.5"	480V POWER	
23	30-DS-4 COMPACTOR #4	30-PP-1	1.5"	480V POWER	
24	30-DS-5 COMPACTOR #5	30-PP-1	1.5"	480V POWER	
25	30-DS-6 COMPACTOR #6	30-PP-1	1.5"	480V POWER	
26	30-DS-7 COMPACTOR #7	30-PP-1	1.5"	480V POWER	
27	30-DS-8 COMPACTOR #8	30-PP-1	1.5"	480V POWER	
28	30-DS-9 COMPACTOR #9	30-PP-1	1.5"	480V POWER	
29	30-DS-10 COMPACTOR #10	30-PP-1	1.5"	480V POWER	
30	CANOPY #1 LIGHTS	30-PP-1	1"	277V POWER	
31	CANOPY #2 LIGHTS	30-PP-1	1"	277V POWER	
32	HANDHOLE (POWER)	10-LP-1	1.5"	EMPTY	
33	HANDHOLE (COMMUNICATIONS)	10-CP-1	1.5"	EMPTY	
34	05-LCP-1-2 MOTORIZED SLIDE GATE	30-LP-1	1"	208V POWER	
35	HANDHOLE (POWER)	30-LP-1	1.5"	EMPTY	
36	HANDHOLE (POWER)	30-PP-1	1.5"	EMPTY	
37	EXST CLASS I SCALEHOUSE PULLBOX	05-FP-7	4"	FIBER OPTIC CABLE	NOTE 1
CE1	N/A	N/A	1.5"	EMPTY	NOTE 6

NOTES:
1. INSTALL ALL 4" FIBER OPTIC RACEWAYS WITH 3 CHANNEL INNERDUCT
2. RUN EACH CABLE IN SEPARATE INNERUCT
3. NOT USED
4. COUNTY TO PROVIDE AND INSTALL TELEPHONE WIRE
5. SEE DWG 90-D-105 FOR CLASS III NETWORK EQT.
6. INSTALL EMPTY CONDUIT FOR POWER BETWEEN HANDHOLES OR BETWEEN CAMERA FIELD PANELS

NO.	DATE	DSGN	DR	CHK	APVD	BY	APVD
		J LEWIS	J LEWIS	M GOSLOW	D NICHOLSON		

REVISION

©CH2M HILL 2010. ALL RIGHTS RESERVED.

THE IDEAS AND DESIGNS INCORPORATED HEREIN, AS AN INSTRUMENT OF THE PROFESSIONAL SERVICE, IS THE PROPERTY OF CH2M HILL AND IS NOT TO BE USED, IN WHOLE OR IN PART, FOR ANY OTHER PROJECT WITHOUT THE WRITTEN AUTHORIZATION OF CH2MHILL.

REUSE OF DOCUMENTS:

RECORD DRAWINGS FOR PERMIT

3011 SW WILLISTON RD
GAINESVILLE, FLORIDA 32608
EB0000072 AAC001992
DAVID C NICHOLSON PE 60201

CH2MHILL

SOLID WASTE SYSTEM
UPGRADE DESIGN
PASCO COUNTY
PASCO COUNTY, FLORIDA

ELECTRICAL
WEST PASCO SITE
DUCTBANK SECTIONS

VERIFY SCALE
BAR IS ONE INCH ON ORIGINAL DRAWING.
0 1"

DATE	AUGUST 2012
PROJ	378217
DWG	30-E-301
SHEET	

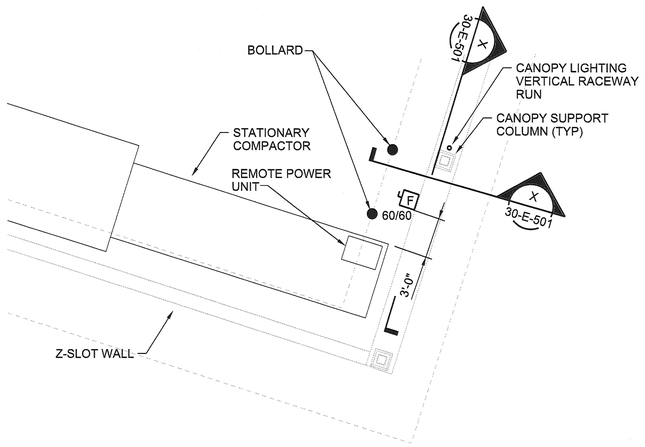

NOTES:

1. REFER TO SHEET 30-E-501 FOR DISCONNECT SWITCH MOUNTING DETAILS.
2. COORDINATE DISCONNECT SWITCH LOCATION WITH STATIONARY COMPACTOR.

TYPICAL STATIONARY COMPACTOR DISCONNECT SWITCH INSTALLATION

RECORD DRAWINGS

Revisions Drawn By D WELLS Date 7/16/12

THESE RECORD DRAWINGS HAVE BEEN PREPARED, IN PART, ON THE BASIS OF INFORMATION COMPILED BY OTHERS. THEY ARE NOT INTENDED TO REPRESENT IN DETAIL THE EXACT LOCATION, TYPE OF COMPONENT NOR MANNER OF CONSTRUCTION. THE ENGINEER WILL NOT BE RESPONSIBLE FOR ANY ERRORS OR OMISSIONS WHICH HAVE BEEN INCORPORATED INTO THE RECORD DRAWINGS.

DAVID C. NICHOLSON LICENSE No. 60201 STATE OF FLORIDA PROFESSIONAL ENGINEER

NO.	DATE	REVISION	BY	APVD
DSGN	J LEWIS	DR J LEWIS CHK M GOSLOW		APVD D NICHOLSON

©CH2M HILL 2010. ALL RIGHTS RESERVED.

3011 SW WILLISTON RD.
GAINESVILLE, FLORIDA 32608
EB0000072 AAC001992
DAVID C NICHOLSON PE 60201

CH2MHILL

SOLID WASTE SYSTEM
UPGRADE DESIGN
PASCO COUNTY
PASCO COUNTY, FLORIDA

ELECTRICAL
WEST PASCO SITE
CITIZEN DROP OFF
ENLARGED PLANS

VERIFY SCALE

BAR IS ONE INCH ON ORIGINAL DRAWING.
0 1"

DATE	AUGUST 2012
PROJ	378217
DWG	30-E-401
SHEET	

REUSE OF DOCUMENTS: THIS DOCUMENT, AND THE IDEAS AND DESIGNS INCORPORATED HEREIN, AS AN INSTRUMENT OF PROFESSIONAL SERVICE, IS THE PROPERTY OF CH2M HILL AND IS NOT TO BE USED, IN WHOLE OR IN PART, FOR ANY OTHER PROJECT WITHOUT THE WRITTEN AUTHORIZATION OF CH2MHILL

RECORD DRAWINGS FOR PERMIT

NDM SERVER: GNV FILENAME: dn30E401_378217.dgn PLOT DATE: 8/3/2012 PLOT TIME: 11:21:13 AM

NOTES:

1. CONDUIT SHALL BE CAST-IN-PLACE, THREADED RIGID ALUMINUM STEEL, FULL LENGTH. USE PVC-COATED ALUMINUM ON CONCRETE EMBEDDED PORTION.
2. SIZE OPENING FOR RACEWAY SUPPLYING STATIONARY COMPACTOR FOR 1" FLEXIBLE METAL, LIQUID-TIGHT CONDUIT. INSTALL CAP IN OPENING.

STATIONARY COMPACTOR DISCONNECT SWITCH MOUNTING DETAIL

NTS

NOTES:

1. USE THIS CONSTRUCTION WHEREVER RACEWAYS RUN ACROSS A Z-SLOT.

DUCTBANK RISER

NTS

30LC

PANEL LAYOUT

EXTERIOR LIGHTING CONTACTOR 30 LC CONTROL DIAGRAM AND PANEL LAYOUT

NTS

NOTES:

1. CONSULT WITH BASIN MANUFACTURER REGARDING WALL MOUNTED EQUIPMENT.

COMBUSTIBLE GAS DETECTOR MOUNTING DETAIL

NTS

RECORD DRAWINGS

Revisions Drawn By D WELLS Date 7/16/12

THESE RECORD DRAWINGS HAVE BEEN PREPARED, IN PART, ON THE BASIS OF INFORMATION COMPILED BY OTHERS. THEY ARE NOT INTENDED TO REPRESENT IN DETAIL THE EXACT LOCATION, TYPE OF COMPONENT NOR MANNER OF CONSTRUCTION. THE ENGINEER WILL NOT BE RESPONSIBLE FOR ANY ERRORS OR OMISSIONS WHICH HAVE BEEN INCORPORATED INTO THE RECORD DRAWINGS.

FRONT SECTION VIEW

NTS

SIDE SECTION VIEW

NTS

NOTES:

1. ENSURE VERTICAL CONDUIT RUN FOR CANOPY LIGHTING IS ALONG THE CENTERLINE OF THE WALL, AS SHOWN.
2. NOT USED.
3. USE PULLBOXES AS NEEDED. SUPPORT CONDUIT EVERY 8 FEET ALONG THE CANOPY SUPPORT COLUMN.

PLACE ON ALL LIGHTING CONTACTORS

WARNING!

THIS CONTROLLER RECEIVES POWER FROM MORE THAN ONE SOURCE. EXERCISE EXTREME CAUTION AND FOLLOW ALL SAFETY PROCEDURES.

MISCELLANEOUS SIGNAGE

NTS

NO.	DATE	REVISION	BY	APVD

DSGN J LEWIS DR A CLOUGH CHK M GOSLOW APVD D NICHOLSON

3011 SW WILLISTON RD
GAINESVILLE, FLORIDA 32608
EB0000072 AAC001992
DAVID C NICHOLSON PE 60201

CH2MHILL

SOLID WASTE SYSTEM
UPGRADE DESIGN
PASCO COUNTY
PASCO COUNTY, FLORIDA

ELECTRICAL
WEST PASCO SITE
CITIZEN DROP OFF AREA
DETAILS

VERIFY SCALE
BAR IS ONE INCH ON ORIGINAL DRAWING.
0 1"

DATE	AUGUST 2012
PROJ	378217
DWG	30-E-501
SHEET	

REUSE OF DOCUMENTS: THIS DOCUMENT, AND THE IDEAS AND DESIGNS INCORPORATED HEREIN, AS AN INSTRUMENT OF PROFESSIONAL SERVICE, IS THE PROPERTY OF CH2M HILL AND IS NOT TO BE USED, IN WHOLE OR IN PART, FOR ANY OTHER PROJECT WITHOUT THE WRITTEN AUTHORIZATION OF CH2MHILL.
©CH2M HILL 2010. ALL RIGHTS RESERVED.

RECORD DRAWINGS FOR PERMIT

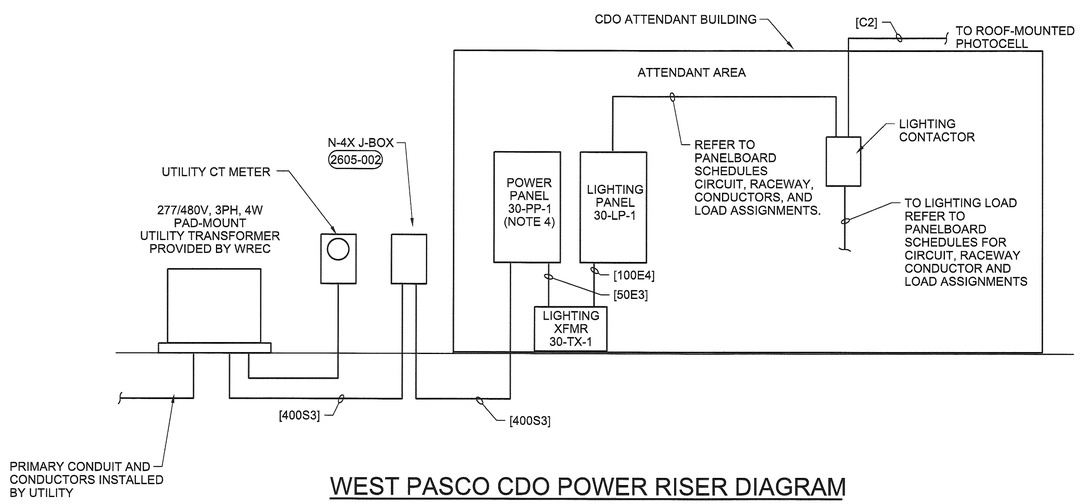

WEST PASCO CDO POWER RISER DIAGRAM

NTS

NOTES:

1. REFER TO SHEET 05-E-101 FOR INFORMATION ON WREC STANDARDS FOR PROVIDING NEW ELECTRICAL SERVICE.
2. REFER TO PANELBOARD SCHEDULES FOR REMAINING CDO AND CDO ATTENDANT BUILDING LOADS, CIRCUIT ASSIGNMENTS, RACEWAY AND CONDUCTOR INFORMATION.
3. CLASS 1, DIV 1, GROUP D CONDUIT SEAL: CROUSE-HINDS SERIES EYS, OR EQUAL.
4. UL LISTED AS SERVICE ENTRANCE RATED EQUIPMENT.

LOAD CALCS: WEST PASCO CDO

EQUIPMENT	QTY	KVA EACH	CONN KVA
STATIONARY COMPACTOR	5	33	165
OTHER PANEL 30-PP-1 LOADS	-	17.9	17.9
		SUBTOTAL	182.9
		PLUS 25% OF LARGEST MOTOR	8
		TOTAL KVA	190.9
		SERVICE AMPS	229.6

30-PP-1 — Fed From Utility — **PANEL BOARD SCHEDULE** — **30-PP-1**

480 / 277 VOLTS | 400 AMPS | MAIN CB | 3 Phase | 4 Wire | FEEDER = 4"C, 4#500, 1#3G | NEMA 1 | KAIC = 42

CKT NBR	EQUIPMENT PROTECTED	CKT BKR POLE	CKT BKR TRIP	Nbr Sets	WIRE AND CONDUIT ** Phase	Neu	Grd	Cond	PHASE KVA A	PHASE KVA B	PHASE KVA C	WIRE AND CONDUIT ** Phase	Neu	Grd	Cond	Nbr Sets	CKT BKR POLE	CKT BKR TRIP	EQUIPMENT PROTECTED	CKT NBR
1									11.1	0.0										2
3	Compactor #1 via 30-DS-1	3	60	1	#4	-	#8	1-1/4"		11.1	0.0								Compactor #6 via 30-DS-6	4
5											11.1	0.0								6
7									11.1	0.0										8
9	Compactor #2 via 30-DS-2	3	60	1	#4	-	#8	1-1/4"		11.1	0.0								Compactor #7 via 30-DS-7	10
11											11.1	0.0								12
13									11.1	0.0										14
15	Compactor #3 via 30-DS-3	3	60	1	#4	-	#8	1-1/4"		11.1	0.0								Compactor #8 via 30-DS-8	16
17											11.1	0.0								18
19									11.1	0.0										20
21	Compactor #4 via 30-DS-4	3	60	1	#4	-	#8	1-1/4"		11.1	0.0								Compactor #9 via 30-DS-9	22
23											11.1	0.0								24
25									11.1	0.0										26
27	Compactor #5 via 30-DS-5	3	60	1	#4	-	#8	1-1/4"		11.1	0.0								Compactor #10 via 30-DS-10	28
29											11.1	0.0								30
31																				32
33	Spare	3	20														3	20	Spare	34
35																				36
37	Canopy Lights via 30-LC-1	1	20	1	#8	-	#8	1"	2.4											38
39	Canopy Lights via 30-LC-2	1	20	1	#8	-	#8	1"		1.2							2	20	Spare	40
41	Spare	1	20														1	20	Spare	42
									SUBFEED LUGS 3.9	4.2	6.2									
									CONNECTED KVA = 62	61	62	** PROVIDE #12 PHASE (QTY=CB POLES) AND GROUND IN 3/4" CONDUIT UNLESS DIFFERENT NUMBER AND/OR GREATER SIZES ARE SHOWN ON PLANS.								
									CONNECTED AMPS = 223	220	223									

30-LP-1 — Fed Fr. 30-PP-1 via 30-TX-1 — **PANEL BOARD SCHEDULE** — **30-LP-1**

208 / 120 VOLTS | 100 AMPS | MAIN CB | 3 Phase | 4 Wire | FEEDER = 1-1/4"C, 4#3,1#8G | NEMA 1 | KAIC = 18

CKT NBR	EQUIPMENT PROTECTED	CKT BKR POLE	CKT BKR TRIP	Nbr Sets	WIRE AND CONDUIT ** Phase	Neu	Grd	Cond	PHASE KVA A	PHASE KVA B	PHASE KVA C	WIRE AND CONDUIT ** Phase	Neu	Grd	Cond	Nbr Sets	CKT BKR POLE	CKT BKR TRIP	EQUIPMENT PROTECTED	CKT NBR
1	Receptacles-Toilet	1	20						0.4	0.5							1	20	Interior Lights, 30-EF-1	2
3	Receptacles-Exterior	1	20							0.8	0.5						1	20	Building Exterior Lights	4
5	Receptacles-Interior	1	20								1.2	2.3								6
7	Restroom Lights\ 30-EF-2	1	20						0.2	2.3		#10	-	#10	3/4"	1	2	30	Water Heater (30-WH-01)	8
9	A/C Unit (30-ACU-1)	2	30	1	#10	-	#10	3/4"		2.1	0.3						1	20	Parking Lot Lighting via 30-LC-3	10
11											2.1									12
13	Motorized gate 05-LCP-1-2	3	20	1	#10	-	#10	3/4"	0.5			#8	-	#10	3/4"	1	3	40	Sanitary Sump Control Panel 30-LCP-	14
15										0.5										16
17											0.5	0.1					1	20	Combustible Gas Detector 30-AIT-1	18
19	Space																		Space	20
21	Space																		Space	22
23	Space																		Space	24
25	Space																		Space	26
27	Space																		Space	28
29	Space																		Space	30
31	Space																		Space	32
33	Space																		Space	34
35	Space																		Space	36
37	Spare	1	20																	38
39	Spare	1	20														3	20	Spare	40
41	Spare	1	20																	42
									CONNECTED KVA = 3.9	4.2	6.2	** PROVIDE #12 PHASE (QTY=CB POLES) AND GROUND IN 3/4" CONDUIT UNLESS DIFFERENT NUMBER AND/OR GREATER SIZES ARE SHOWN ON PLANS.								
									CONNECTED AMPS = 32	35	52									

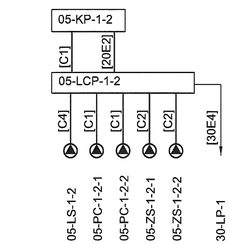

MOTORIZED GATE RISER

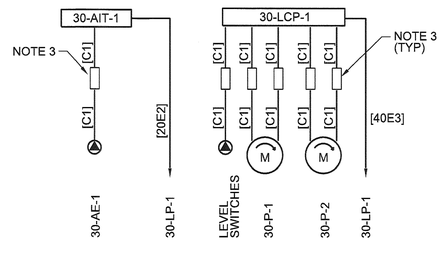

SANITARY SUMP PUMP STATION RISER

RECORD DRAWINGS

Revisions Drawn By D WELLS Date 7/16/12

THESE RECORD DRAWINGS HAVE BEEN PREPARED, IN PART, ON THE BASIS OF INFORMATION COMPILED BY OTHERS. THEY ARE NOT INTENDED TO REPRESENT IN DETAIL THE EXACT LOCATION, TYPE OF COMPONENT NOR MANNER OF CONSTRUCTION. THE ENGINEER WILL NOT BE RESPONSIBLE FOR ANY ERRORS OR OMISSIONS WHICH HAVE BEEN INCORPORATED INTO THE RECORD DRAWINGS.

DAVID C NICHOLSON — LICENSE No 70285 — STATE OF FLORIDA — REGISTERED PROFESSIONAL ENGINEER

NO.	DATE	DSGN	DR	REVISION	CHK	APVD	BY	APVD
								D NICHOLSON

©CH2M HILL 2010. ALL RIGHTS RESERVED.
THESE DESIGNS INCORPORATED HEREIN, AS AN INSTRUMENT OF PROFESSIONAL SERVICE, IS THE PROPERTY OF CH2M HILL AND IS NOT TO BE USED, IN WHOLE OR IN PART, FOR ANY OTHER PROJECT WITHOUT THE WRITTEN AUTHORIZATION OF CH2MHILL.

CH2MHILL
3011 SW WILLISTON RD
GAINESVILLE, FLORIDA 32608
FB0000072 - AAC001932
DAVID C NICHOLSON PE 60201

SOLID WASTE SYSTEM
UPGRADE DESIGN
PASCO COUNTY
PASCO COUNTY, FLORIDA

ELECTRICAL
WEST PASCO SITE
CITIZEN DROP OFF AREA
DIAGRAMS

REUSE OF DOCUMENTS: THIS DOCUMENT AND THE IDEAS AND DESIGNS INCORPORATED HEREIN, AS AN INSTRUMENT OF PROFESSIONAL SERVICE, IS THE PROPERTY OF CH2M HILL AND IS NOT TO BE USED, IN WHOLE OR IN PART, FOR ANY OTHER PROJECT WITHOUT THE WRITTEN AUTHORIZATION OF CH2MHILL.

RECORD DRAWINGS FOR PERMIT

VERIFY SCALE
BAR IS ONE INCH ON ORIGINAL DRAWING. 0 1"

DATE	AUGUST 2012
PROJ	378217
DWG	30-E-601
SHEET	

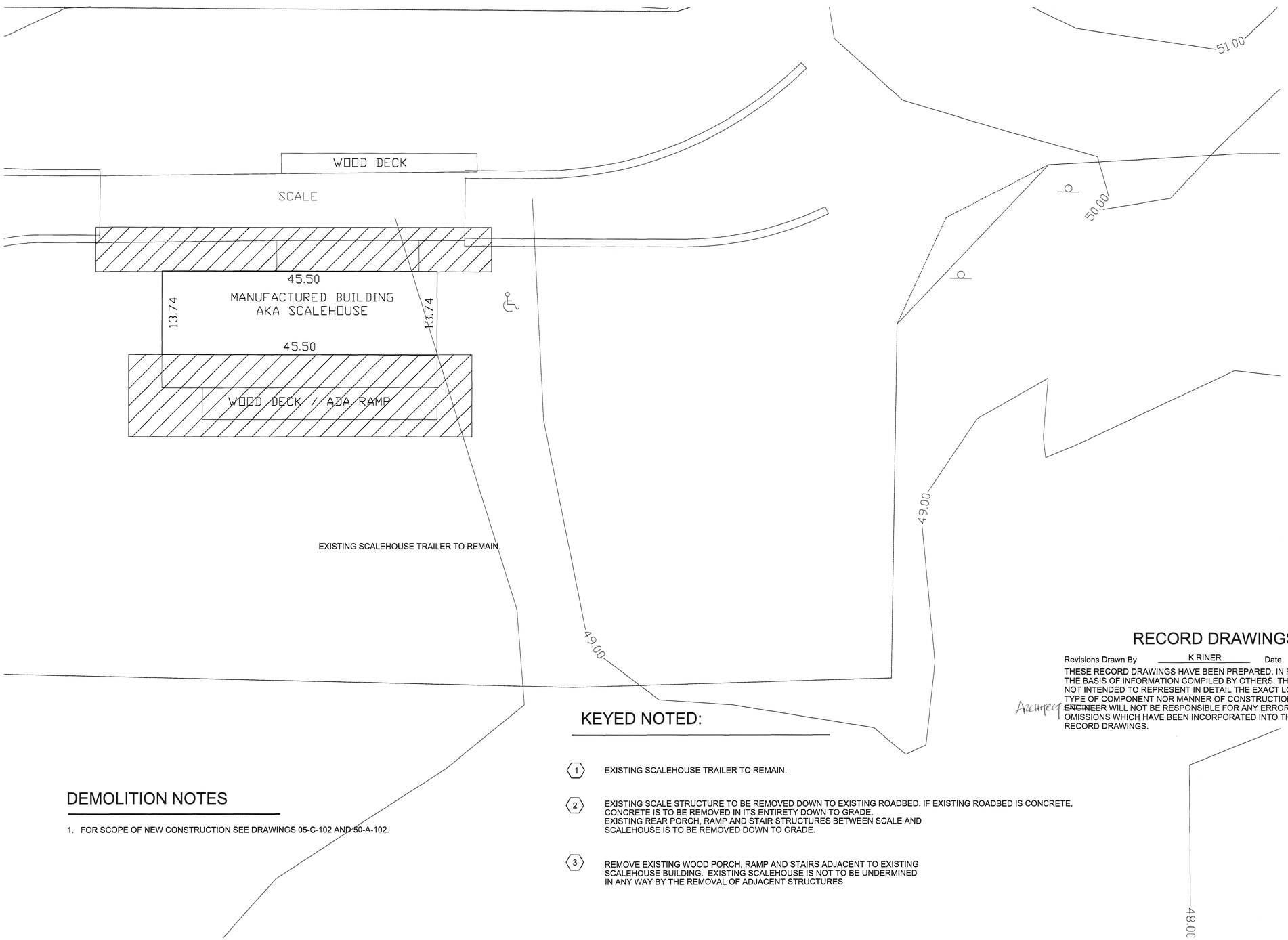

RECORD DRAWINGS

Revisions Drawn By K RINER Date JULY 2012

THESE RECORD DRAWINGS HAVE BEEN PREPARED, IN PART, ON THE BASIS OF INFORMATION COMPILED BY OTHERS. THEY ARE NOT INTENDED TO REPRESENT IN DETAIL THE EXACT LOCATION, TYPE OF COMPONENT NOR MANNER OF CONSTRUCTION. THE ~~ENGINEER~~ ARCHITECT WILL NOT BE RESPONSIBLE FOR ANY ERRORS OR OMISSIONS WHICH HAVE BEEN INCORPORATED INTO THE RECORD DRAWINGS.

KEYED NOTED:

1. EXISTING SCALEHOUSE TRAILER TO REMAIN.
2. EXISTING SCALE STRUCTURE TO BE REMOVED DOWN TO EXISTING ROADBED. IF EXISTING ROADBED IS CONCRETE, CONCRETE IS TO BE REMOVED IN ITS ENTIRETY DOWN TO GRADE. EXISTING REAR PORCH, RAMP AND STAIR STRUCTURES BETWEEN SCALE AND SCALEHOUSE IS TO BE REMOVED DOWN TO GRADE.
3. REMOVE EXISTING WOOD PORCH, RAMP AND STAIRS ADJACENT TO EXISTING SCALEHOUSE BUILDING. EXISTING SCALEHOUSE IS NOT TO BE UNDERMINED IN ANY WAY BY THE REMOVAL OF ADJACENT STRUCTURES.

DEMOLITION NOTES

1. FOR SCOPE OF NEW CONSTRUCTION SEE DRAWINGS 05-C-102 AND 50-A-102.

NO.	DATE	REVISION	BY	APVD

DSGN B TRAUTWEIN | DR A COULLIAS | CHK T DODGE | APVD B TRAUTWEIN

CH2MHILL
3011 SW WILLISTON RD
GAINESVILLE, FLORIDA 32608
EB0000072 AAC001992
Beth Trautwein AR 91388

SOLID WASTE SYSTEM
UPGRADE DESIGN
PASCO COUNTY
PASCO COUNTY, FLORIDA

ARCHITECTURAL
WEST PASCO SITE
OLD SCALEHOUSE RENOVATION
DEMOLITION PLAN

VERIFY SCALE
BAR IS ONE INCH ON ORIGINAL DRAWING.
0 1"

DATE	AUGUST 2012
PROJ	378217
DWG	50-A-101
SHEET	

REUSE OF DOCUMENTS: THIS DOCUMENT, AND THE IDEAS AND DESIGNS INCORPORATED HEREIN, AS AN INSTRUMENT OF PROFESSIONAL SERVICE, IS THE PROPERTY OF CH2M HILL AND IS NOT TO BE USED, IN WHOLE OR IN PART, FOR ANY OTHER PROJECT WITHOUT THE WRITTEN AUTHORIZATION OF CH2MHILL.
©CH2M HILL 2010. ALL RIGHTS RESERVED.

RECORD DRAWINGS FOR PERMIT

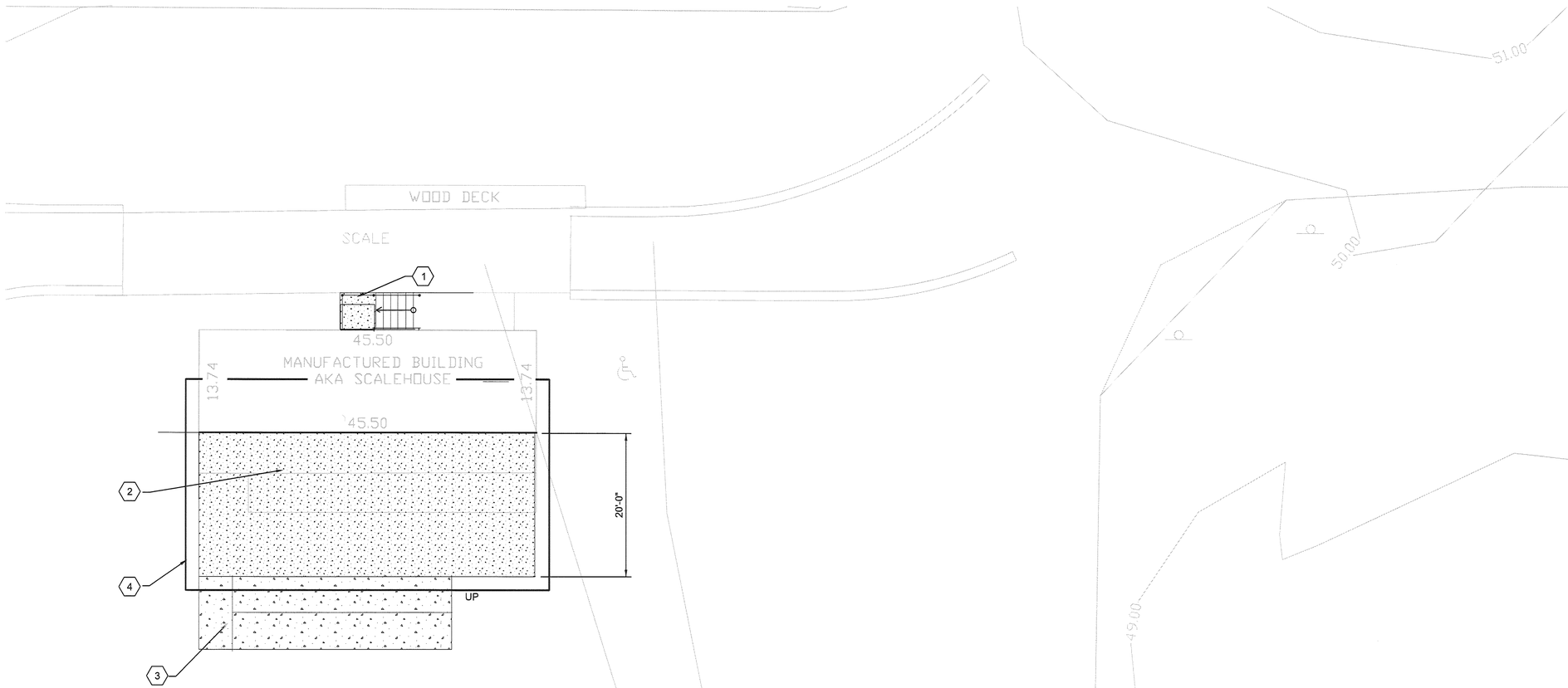

NEW CONSTRUCTION NOTES:

1. ALL DESIGN AND CONSTRUCTION TO BE PER FLORIDA BUILDING CODE 2007 AND OTHER LOCAL APPLICABLE CODES.
2. SEE 00-G-005 FOR ADDITIONAL DESIGN CRITERIA NOT CALLED OUT IN KEYED NOTES.

KEYED NOTED:

1. NEW STAIR AND CONCRETE STAIR LANDING, WITH ALUMINUM GUARDRAIL AND HANDRAIL TO SERVE EGRESS DOOR ON THE NORTH SIDE OF THE EXISTING SCALEHOUSE. DESIGN LIVE LOAD = 100 PSF.
2. NEW 20'-0" X +45'-0" CONCRETE PATIO DECK WHICH WILL BE AS LONG AS THE EXISTING SCALEHOUSE ,20'-0" WIDE AND AT ELEVATION EQUAL TO THE FINISH FLOOR OF THE EXISTING SCALEHOUSE. PROVIDE RETAINING WALLS OR SUPPORTING FOUNDATION FOR SLAB ON GRADE OR ELEVATED STRUCTURAL SLAB RESPECTIVELY. DESIGN LIVE LOAD = 100 PSF.
3. NEW HANDICAPPED RAMP FROM PARKING AREA TO LEVEL OF NEW CONCRETE PATIO DECK. HANDICAPPED RAMP SHALL BE CONCRETE WITH ALUMINUM HANDRAIL AND GUARDRAILS IN COMPLIANCE WITH CHAPTER 10 OF THE 2007 FLORIDA BUILDING CODE. DESIGN LIVE LOAD = 100 PSF.
4. NEW METAL STANDING SEAM ROOF CANOPY DESIGNED TO CREATE WATERTIGHT ROOF EXTENSION OVER NEW PATIO DECK ADJACENT TO EXISTING SCALEHOUSE. ROOF SHALL BE DETAILED TO CLOSE ALL OPENINGS BETWEEN SCALEHOUSE ROOF AND CANOPY ROOF. NEW CANOPY ROOF SHALL DRAIN USING GUTTERS, LEADERS AND CONCRETE SPLASH BLOCKS. STRUCTURAL CANOPY SUPPORT SYSTEM SHALL NOT INTRODUCE ANY LOAD ON THE EXISTING SCALEHOUSE STRUCTURE. DESIGN ROOF LIVE LOAD 20 PSF.

RECORD DRAWINGS

Revisions Drawn By K RINER Date JULY 2012

THESE RECORD DRAWINGS HAVE BEEN PREPARED, IN PART, ON THE BASIS OF INFORMATION COMPILED BY OTHERS. THEY ARE NOT INTENDED TO REPRESENT IN DETAIL THE EXACT LOCATION, TYPE OF COMPONENT NOR MANNER OF CONSTRUCTION. THE ~~ENGINEER~~ WILL NOT BE RESPONSIBLE FOR ANY ERRORS OR OMISSIONS WHICH HAVE BEEN INCORPORATED INTO THE RECORD DRAWINGS.

ARCHITECT

STATE OF FLORIDA
BETH TRAUTWEIN
REGISTERED ARCHITECT

NO.	DATE	REVISION	BY
DSGN	B TRAUTWEIN	DR A COULLIAS CHK T DODGE	APVD B TRAUTWEIN

©CH2M HILL 2010. ALL RIGHTS RESERVED.

3011 SW WILLISTON RD
GAINESVILLE, FLORIDA 32608
EB0000072 AAC001992
Beth Trautwein AR 91388

SOLID WASTE SYSTEM
UPGRADE DESIGN
PASCO COUNTY
PASCO COUNTY, FLORIDA

CH2MHILL

ARCHITECTURAL
WEST PASCO SITE
OLD SCALEHOUSE RENOVATION
NEW CONSTRUCTION PLAN

REUSE OF DOCUMENTS: THIS DOCUMENT, AND THE IDEAS AND DESIGNS INCORPORATED HEREIN, AS AN INSTRUMENT OF PROFESSIONAL SERVICE, IS THE PROPERTY OF CH2M HILL AND IS NOT TO BE USED, IN WHOLE OR IN PART, FOR ANY OTHER PROJECT WITHOUT THE WRITTEN AUTHORIZATION OF CH2MHILL.

RECORD DRAWINGS FOR PERMIT

VERIFY SCALE
BAR IS ONE INCH ON ORIGINAL DRAWING.
0 1"

DATE	AUGUST 2012
PROJ	378217
DWG	50-A-102
SHEET	

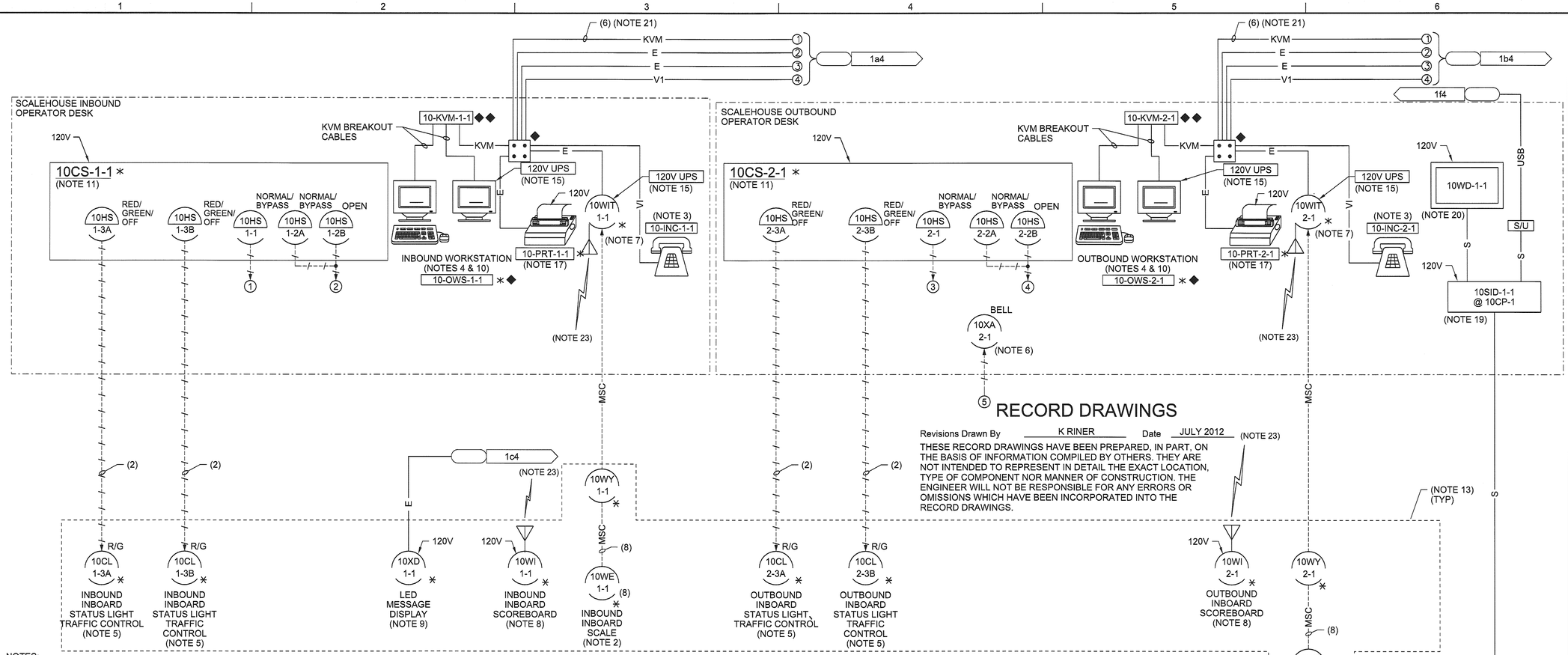

RECORD DRAWINGS

Revisions Drawn By K RINER Date JULY 2012 (NOTE 23)

THESE RECORD DRAWINGS HAVE BEEN PREPARED, IN PART, ON THE BASIS OF INFORMATION COMPILED BY OTHERS. THEY ARE NOT INTENDED TO REPRESENT IN DETAIL THE EXACT LOCATION, TYPE OF COMPONENT NOR MANNER OF CONSTRUCTION. THE ENGINEER WILL NOT BE RESPONSIBLE FOR ANY ERRORS OR OMISSIONS WHICH HAVE BEEN INCORPORATED INTO THE RECORD DRAWINGS.

NOTES:

1. NOT USED.
2. PROVIDE FAIRBANKS TALON HV ABOVE GRADE TRUCK SCALE WITH COLUMN LOAD CELLS.
3. CONTRACTOR TO PROVIDE TELEPHONE. AASTRA 9116, OR EQUAL.
4. OPERATOR WORKSTATIONS AND MONITORS WILL BE SELECTED DURING CONSTRUCTION BY THE COUNTY FOR PURCHASE IN ACCORDANCE WITH ARTICLE COMPUTER COMPONENT PROCUREMENT IN SECTION 27 10 00, STRUCTURED CABLING AND COMPUTER SYSTEM. WORK WITH COUNTY IN SELECTION OF OPERATOR WORKSTATIONS TO ENSURE COMPATIBILITY WITH SOFTWARE AND HARDWARE SYSTEMS PROVIDED AS A PART OF THIS PROJECT THAT INTERFACE WITH THE OPERATOR WORKSTATIONS.
5. PROVIDE FAIRBANKS TRAFFIC SIGNAL WITH CORROSION RESISTANT ALUMINUM HOUSING, 8" POLYMER LENS WITH LENS VISOR, 4.5' x 8' ALUMINUM TRAFFIC POLE, POLE BASE AND INSTALLATION KIT.
6. PROVIDE EXPOSED GONG BELL WITH 78dB AT 10-FEET SOUND LEVEL FOR VEHICLE PRESENT NOTIFICATION AS MANUFACTURER BY EDWARDS SIGNALING, OR EQUAL. WIRE OUTBOUND INBOARD GATE LOOP DETECTOR TO BELL FOR 1-SECOND ALARM DURATION.
7. PROVIDE FAIRBANKS 2500-F2 ELECTRONIC TRANSMITTER WITH ETHERNET CARD.
8. PROVIDE FAIRBANKS 1605 SERIES REMOTE DISPLAY.
9. PROVIDE ALPHA 7200 DISPLAY WITH NEMA 4X CASING, ETHERNET INTERFACE, AND REMOTE CONTROL KEYBOARD.
10. SCALE SUPPLIER TO PROVIDE PC SCALE CLIENT LICENSE WITH VERSION COMPATIBLE WITH COUNTY'S EXISTING SYSTEM. COORDINATE WITH COUNTY AND PROVIDE CRYSTAL REPORT WRITER ACCEPTABLE TO THE COUNTY WITH THE SAME FEATURES AND CAPABILITIES AS THE EXISTING SOFTWARE AT THE COUNTY'S SHADY HILLS FACILITY. THIS SOFTWARE REQUIRES AN ETHERNET CONNECTION TO PASCO COUNTY NETWORK SERVER. COORDINATE CONNECTION TO THE EXISTING NETWORK INCLUDING IP ADDRESSING AND AND SECURITY REQUIREMENTS WITH THE COUNTY.
11. PROVIDE HOFFMAN NEMA 12 SLOPING FRONT CONSOLET HANDSWITCH ENCLOSURE FOR 22.5 mm PUSHBUTTONS/SWITCHES. PROVIDE ALLEN BRADLEY MODEL 800H MOMENTARY PUSHBUTTON/SWITCHES, OR APPROVED EQUAL. SIZE ENCLOSURE AS REQUIRED FOR NUMBER OF SWITCHES INSTALLED. CLEARLY LABEL THE FUNCTION OF EACH CONTROL STATION AND PUSHBUTTON. PROVIDE NORMAL/BYPASS HANDSWITCH FOR BYPASS GATES. IN NORMAL POSITION, GATE OPENS WHEN OPEN PUSHBUTTON IS PRESSED. IN BYPASS POSITION THE GATE SHALL REMAIN OPEN.
12. PROVIDE LOOP DETECTORS TO CLOSE GATE. PROVIDE OVERRIDE TO CLOSE GATE 5-30 SECONDS AFTER AN OPEN COMMAND IS ISSUED.
13. ITEMS DENOTED BY AN ASTERISK ARE PROVIDED BY THE SCALE SYSTEM SUPPLIER. THE SCALE SYSTEM SUPPLIER IS TO PROVIDE ALL EQUIPMENT NECESSARY FOR A FULLY FUNCTIONAL SYSTEM.
14. REFER TO CIVIL DWG 05-C-103 FOR ADDITIONAL GATE OPERATOR REQUIREMENTS.
15. SEPARATE FLOOR STANDING UPS PROVIDED AT THE INBOUND AND OUTBOUND OPERATOR DESKS BY CONTRACTOR. MINIMUM OF 750 VA AS MANUFACTURED BY APC OR POWERWARE. SIZE TO PROVIDE MINIMUM OF 10 MINUTES OF BACKUP POWER.
16. REFER TO CIVIL DWG 05-C-102 AND SPECIFICATION SECTION 32 31 13, CHAIN LINK FENCES AND GATES FOR ADDITIONAL REQUIREMENTS.
17. PROVIDE SCALE SYSTEM STANDARD PRINTER COMPATIBLE WITH PC SCALE CLIENT FOR CUSTOMER RECEIPT PRINTING.
18. PROVIDE COLUMBIA WEATHER SYSTEMS ORION 510 TRANSMITTER MODEL #9511-B-1 WITH THE FOLLOWING SENSORS:
    - TEMPERATURE
    - RELATIVE HUMIDITY
    - DIGITAL BAROMETER
    - ULTRASONIC WIND DIRECTION & SPEED
    - IMPACT RAIN SENSOR

    INCLUDE THREE STAGE LIGHTNING ARRESTOR AND GROUND IN ACCORDANCE WITH DIV 26 ELECTRICAL. PROVIDE BIRD SPIKE KIT FOR SENSOR. MOUNT SENSOR ON MAST ABOVE SCALEHOUSE CANOPY.
19. PROVIDE ORION INTERFACE MODULE WITH DUAL PORTS FOR CONNECTIONS SHOWN. INSTALL ON SHELF IN RACK IN SCALEHOUSE IT ROOM. PROVIDE SERIAL TO USB CONVERTER FOR CONNECTION TO COMPUTER IN IT ROOM RACK.
20. PROVIDE DESKTOP MOUNTED WEATHER DISPLAY LCD TOUCHSCREEN. COLUMBIA WEATHER SYSTEMS MODEL # 8170-A-1.
21. PROVIDE 6-PORT OUTLET FOR KVM CONNECTIONS AND A SEPARATE 4-PORT OUTLET FOR DATA/VOICE CONNECTIONS.
22. PROVIDE NORMAL/BYPASS HANDSWITCH FOR SCALE GATES. IN NORMAL POSITION, GATE OPENS BY THE OPEN LOOP DETECTOR. IN BYPASS POSITION THE GATE SHALL REMAIN OPEN. PROVIDE LOOP DETECTOR AT THE OUTBOUND INBOARD GATE TO DETECT VEHICLE PRESENCE.
23. PROVIDE RF COMMUNICATION MODULES BETWEEN REMOTE WEIGHT INDICATORS AND ELECTRONIC TRANSMITTERS.

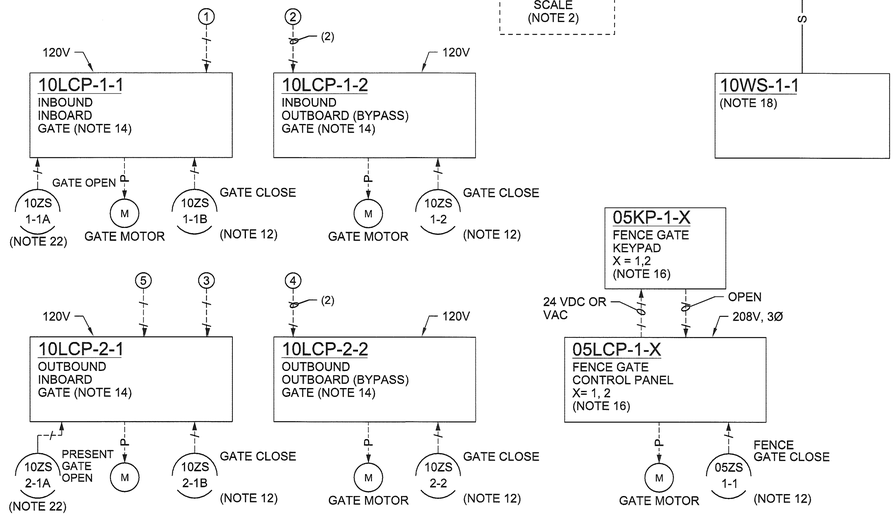

©CH2M HILL 2010. ALL RIGHTS RESERVED.

NORMAN E ANDERSON LICENSE No. 71642 STATE OF FLORIDA PROFESSIONAL ENGINEER

NO.	DATE	DSGN	DR	CHK	REVISION	APVD	BY
		N ANDERSON	A CLOUGH	WR PHILLIPS		APVD	N ANDERSON

CH2MHILL
3011 SW WILLISTON RD
GAINESVILLE, FLORIDA 32608
EB0000072 AAC001992
NORMAN E ANDERSON - PE 71642

SOLID WASTE SYSTEM
UPGRADE DESIGN
PASCO COUNTY
PASCO COUNTY, FLORIDA

INSTRUMENTATION AND CONTROL
WEST PASCO SITE
SCALE SYSTEM
BLOCK DIAGRAM

VERIFY SCALE
BAR IS ONE INCH ON ORIGINAL DRAWING.
0 1"

DATE	AUGUST 2012
PROJ	378217
DWG	90-D-101
SHEET	

REUSE OF DOCUMENTS: THIS DOCUMENT, AND THE IDEAS AND DESIGNS INCORPORATED HEREIN, AS AN INSTRUMENT OF PROFESSIONAL SERVICE, IS THE PROPERTY OF CH2M HILL AND IS NOT TO BE USED, IN WHOLE OR IN PART, FOR ANY OTHER PROJECT WITHOUT THE WRITTEN AUTHORIZATION OF CH2MHILL.

RECORD DRAWINGS FOR PERMIT

NDM SERVER: GNV FILENAME: dn90D601_378217.dgn PLOT DATE: 8/3/2012 PLOT TIME: 11:23:20 AM

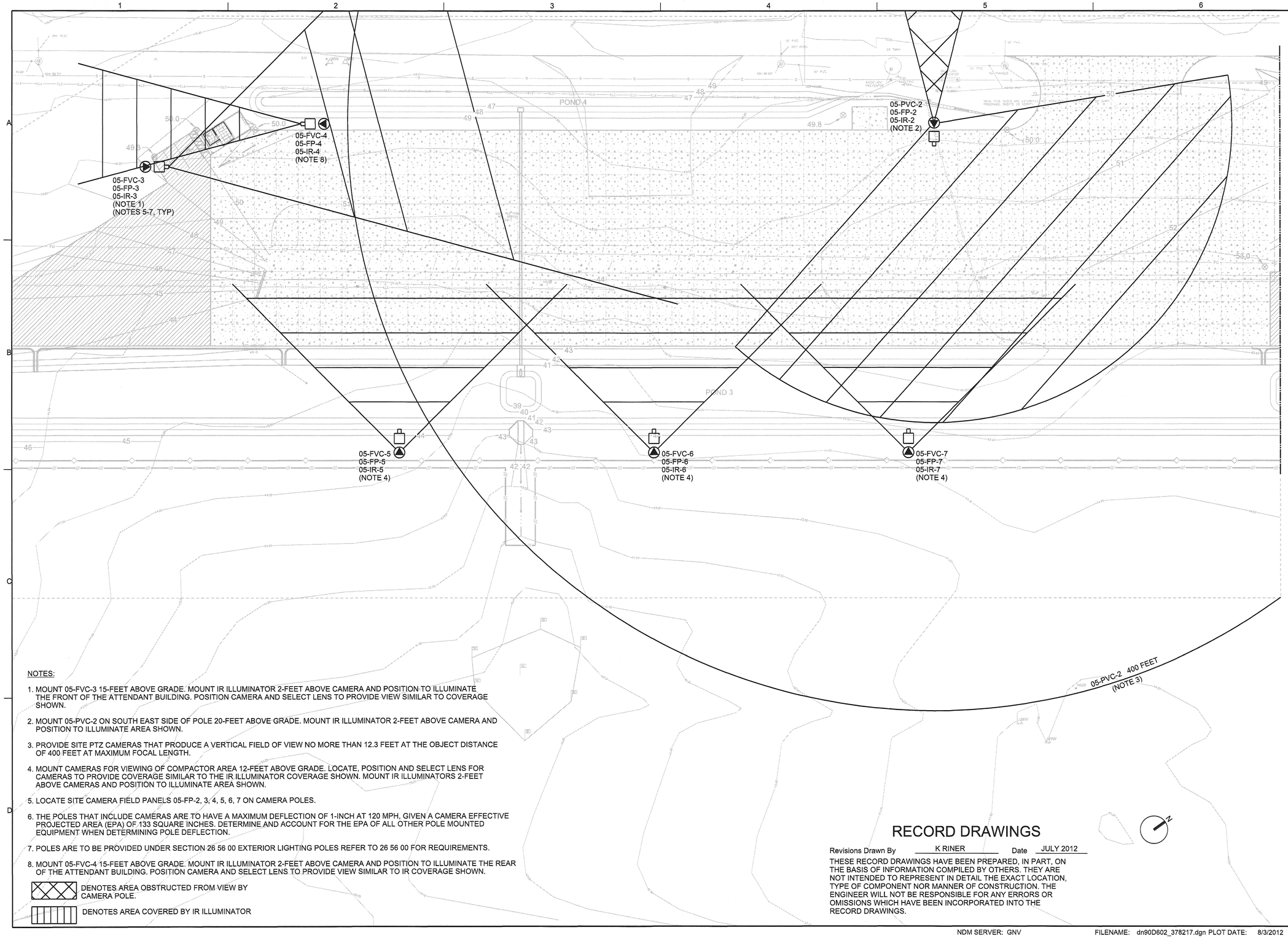

NOTES:

1. MOUNT 05-FVC-3 15-FEET ABOVE GRADE. MOUNT IR ILLUMINATOR 2-FEET ABOVE CAMERA AND POSITION TO ILLUMINATE THE FRONT OF THE ATTENDANT BUILDING. POSITION CAMERA AND SELECT LENS TO PROVIDE VIEW SIMILAR TO COVERAGE SHOWN.
2. MOUNT 05-PVC-2 ON SOUTH EAST SIDE OF POLE 20-FEET ABOVE GRADE. MOUNT IR ILLUMINATOR 2-FEET ABOVE CAMERA AND POSITION TO ILLUMINATE AREA SHOWN.
3. PROVIDE SITE PTZ CAMERAS THAT PRODUCE A VERTICAL FIELD OF VIEW NO MORE THAN 12.3 FEET AT THE OBJECT DISTANCE OF 400 FEET AT MAXIMUM FOCAL LENGTH.
4. MOUNT CAMERAS FOR VIEWING OF COMPACTOR AREA 12-FEET ABOVE GRADE. LOCATE, POSITION AND SELECT LENS FOR CAMERAS TO PROVIDE COVERAGE SIMILAR TO THE IR ILLUMINATOR COVERAGE SHOWN. MOUNT IR ILLUMINATORS 2-FEET ABOVE CAMERAS AND POSITION TO ILLUMINATE AREA SHOWN.
5. LOCATE SITE CAMERA FIELD PANELS 05-FP-2, 3, 4, 5, 6, 7 ON CAMERA POLES.
6. THE POLES THAT INCLUDE CAMERAS ARE TO HAVE A MAXIMUM DEFLECTION OF 1-INCH AT 120 MPH, GIVEN A CAMERA EFFECTIVE PROJECTED AREA (EPA) OF 133 SQUARE INCHES. DETERMINE AND ACCOUNT FOR THE EPA OF ALL OTHER POLE MOUNTED EQUIPMENT WHEN DETERMINING POLE DEFLECTION.
7. POLES ARE TO BE PROVIDED UNDER SECTION 26 56 00 EXTERIOR LIGHTING POLES REFER TO 26 56 00 FOR REQUIREMENTS.
8. MOUNT 05-FVC-4 15-FEET ABOVE GRADE. MOUNT IR ILLUMINATOR 2-FEET ABOVE CAMERA AND POSITION TO ILLUMINATE THE REAR OF THE ATTENDANT BUILDING. POSITION CAMERA AND SELECT LENS TO PROVIDE VIEW SIMILAR TO IR COVERAGE SHOWN.

DENOTES AREA OBSTRUCTED FROM VIEW BY CAMERA POLE.

DENOTES AREA COVERED BY IR ILLUMINATOR

RECORD DRAWINGS

Revisions Drawn By K RINER Date JULY 2012

THESE RECORD DRAWINGS HAVE BEEN PREPARED, IN PART, ON THE BASIS OF INFORMATION COMPILED BY OTHERS. THEY ARE NOT INTENDED TO REPRESENT IN DETAIL THE EXACT LOCATION, TYPE OF COMPONENT NOR MANNER OF CONSTRUCTION. THE ENGINEER WILL NOT BE RESPONSIBLE FOR ANY ERRORS OR OMISSIONS WHICH HAVE BEEN INCORPORATED INTO THE RECORD DRAWINGS.

NORMAN E ANDERSON LICENSE No 71642 STATE OF FLORIDA PROFESSIONAL ENGINEER

NO.	DATE	REVISION	DR	CHK	APVD	BY	APVD
DSGN	N ANDERSON		A CLOUGH	WR PHILLIPS		N ANDERSON	

©CH2M HILL 2010. ALL RIGHTS RESERVED.
THE IDEAS AND DESIGNS INCORPORATED HEREIN, AS AN INSTRUMENT OF PROFESSIONAL SERVICE, IS THE PROPERTY OF CH2M HILL AND IS NOT TO BE USED, IN WHOLE OR IN PART, FOR ANY OTHER PROJECT WITHOUT THE WRITTEN AUTHORIZATION OF CH2MHILL.

3011 SW WILLISTON RD
GAINESVILLE, FLORIDA 32608
EB0000072 AAC001992
NORMAN E ANDERSON - PE 71642

SOLID WASTE SYSTEM
UPGRADE DESIGN
PASCO COUNTY
PASCO COUNTY, FLORIDA

CH2MHILL

INSTRUMENTATION AND CONTROL
WEST PASCO SITE
SITE CAMERA COVERAGE

REUSE OF DOCUMENTS: THIS DOCUMENT, AND THE IDEAS AND DESIGNS INCORPORATED HEREIN, AS AN INSTRUMENT OF PROFESSIONAL SERVICE, IS THE PROPERTY OF CH2M HILL AND IS NOT TO BE USED, IN WHOLE OR IN PART, FOR ANY OTHER PROJECT WITHOUT THE WRITTEN AUTHORIZATION OF CH2MHILL.

RECORD DRAWINGS FOR PERMIT

VERIFY SCALE
BAR IS ONE INCH ON ORIGINAL DRAWING.
0 1"

DATE	AUGUST 2012
PROJ	378217
DWG	90-D-102
SHEET	

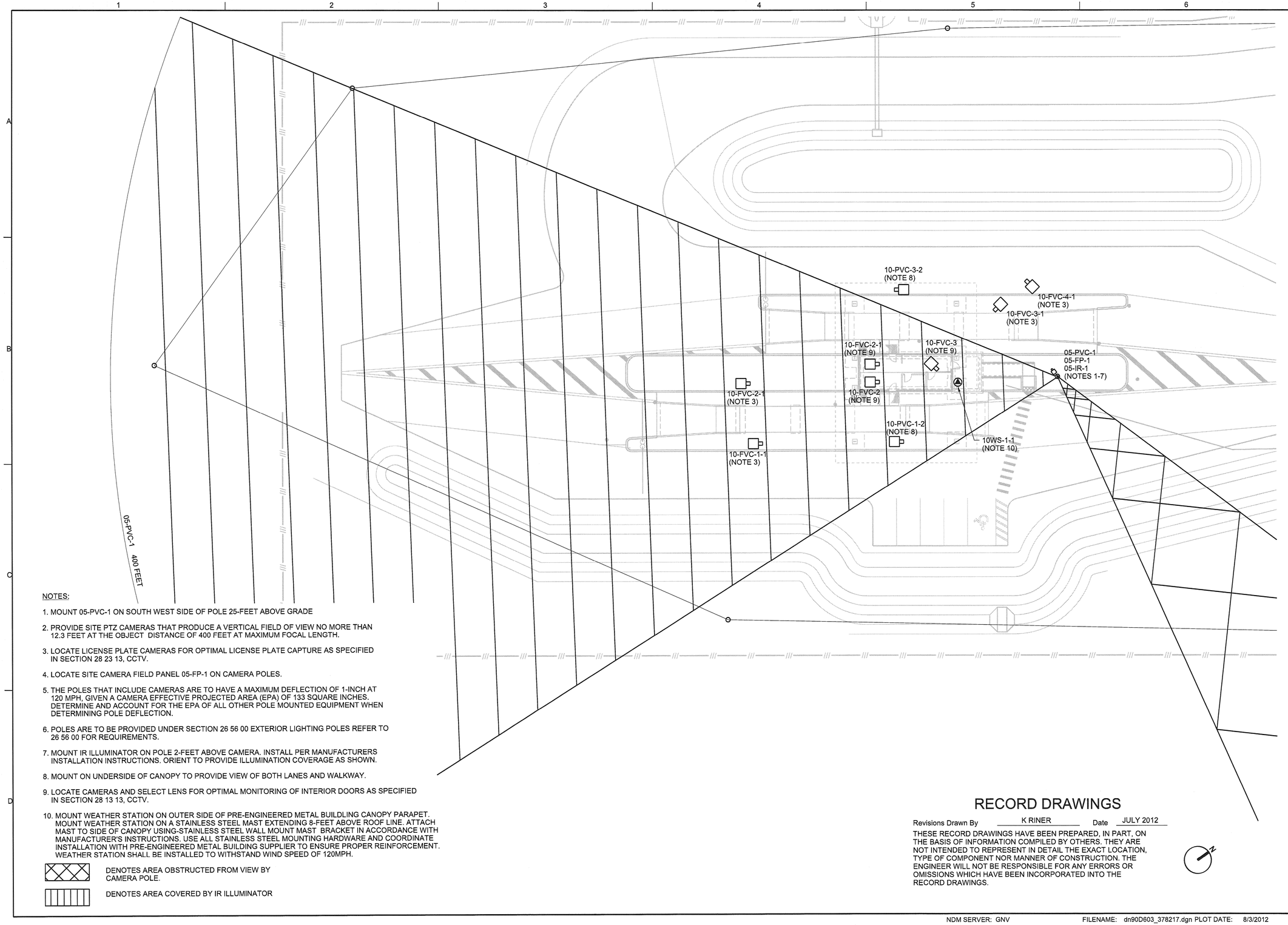

NOTES:

1. MOUNT 05-PVC-1 ON SOUTH WEST SIDE OF POLE 25-FEET ABOVE GRADE
2. PROVIDE SITE PTZ CAMERAS THAT PRODUCE A VERTICAL FIELD OF VIEW NO MORE THAN 12.3 FEET AT THE OBJECT DISTANCE OF 400 FEET AT MAXIMUM FOCAL LENGTH.
3. LOCATE LICENSE PLATE CAMERAS FOR OPTIMAL LICENSE PLATE CAPTURE AS SPECIFIED IN SECTION 28 23 13, CCTV.
4. LOCATE SITE CAMERA FIELD PANEL 05-FP-1 ON CAMERA POLES.
5. THE POLES THAT INCLUDE CAMERAS ARE TO HAVE A MAXIMUM DEFLECTION OF 1-INCH AT 120 MPH, GIVEN A CAMERA EFFECTIVE PROJECTED AREA (EPA) OF 133 SQUARE INCHES. DETERMINE AND ACCOUNT FOR THE EPA OF ALL OTHER POLE MOUNTED EQUIPMENT WHEN DETERMINING POLE DEFLECTION.
6. POLES ARE TO BE PROVIDED UNDER SECTION 26 56 00 EXTERIOR LIGHTING POLES REFER TO 26 56 00 FOR REQUIREMENTS.
7. MOUNT IR ILLUMINATOR ON POLE 2-FEET ABOVE CAMERA. INSTALL PER MANUFACTURERS INSTALLATION INSTRUCTIONS. ORIENT TO PROVIDE ILLUMINATION COVERAGE AS SHOWN.
8. MOUNT ON UNDERSIDE OF CANOPY TO PROVIDE VIEW OF BOTH LANES AND WALKWAY.
9. LOCATE CAMERAS AND SELECT LENS FOR OPTIMAL MONITORING OF INTERIOR DOORS AS SPECIFIED IN SECTION 28 13 13, CCTV.
10. MOUNT WEATHER STATION ON OUTER SIDE OF PRE-ENGINEERED METAL BUILDLING CANOPY PARAPET. MOUNT WEATHER STATION ON A STAINLESS STEEL MAST EXTENDING 8-FEET ABOVE ROOF LINE. ATTACH MAST TO SIDE OF CANOPY USING-STAINLESS STEEL WALL MOUNT MAST BRACKET IN ACCORDANCE WITH MANUFACTURER'S INSTRUCTIONS. USE ALL STAINLESS STEEL MOUNTING HARDWARE AND COORDINATE INSTALLATION WITH PRE-ENGINEERED METAL BUILDING SUPPLIER TO ENSURE PROPER REINFORCEMENT. WEATHER STATION SHALL BE INSTALLED TO WITHSTAND WIND SPEED OF 120MPH.

DENOTES AREA OBSTRUCTED FROM VIEW BY CAMERA POLE.

DENOTES AREA COVERED BY IR ILLUMINATOR

RECORD DRAWINGS

Revisions Drawn By K RINER Date JULY 2012

THESE RECORD DRAWINGS HAVE BEEN PREPARED, IN PART, ON THE BASIS OF INFORMATION COMPILED BY OTHERS. THEY ARE NOT INTENDED TO REPRESENT IN DETAIL THE EXACT LOCATION, TYPE OF COMPONENT NOR MANNER OF CONSTRUCTION. THE ENGINEER WILL NOT BE RESPONSIBLE FOR ANY ERRORS OR OMISSIONS WHICH HAVE BEEN INCORPORATED INTO THE RECORD DRAWINGS.

NORMAN E ANDERSON LICENSE No 71642 STATE OF FLORIDA PROFESSIONAL ENGINEER

NO.	DATE	REVISION	BY	APVD
DSGN	N ANDERSON	DR A CLOUGH	CHK WR PHILLIPS	APVD N ANDERSON

©CH2M HILL 2010. ALL RIGHTS RESERVED.
REUSE OF DOCUMENTS: THIS DOCUMENT AND THE IDEAS AND DESIGNS INCORPORATED HEREIN, AS AN INSTRUMENT OF PROFESSIONAL SERVICE, IS THE PROPERTY OF CH2M HILL AND IS NOT TO BE USED, IN WHOLE OR IN PART, FOR ANY OTHER PROJECT WITHOUT THE WRITTEN AUTHORIZATION OF CH2MHILL.

3011 SW WILLISTON RD
GAINESVILLE, FLORIDA 32608
EB0000072 AA0001592
NORMAN E ANDERSON - PE 71642

CH2MHILL

SOLID WASTE SYSTEM
UPGRADE DESIGN
PASCO COUNTY
PASCO COUNTY, FLORIDA

INSTRUMENTATION AND CONTROL
WEST PASCO SITE
CDO CCTV LAYOUT

VERIFY SCALE
BAR IS ONE INCH ON ORIGINAL DRAWING.
0 1"

DATE	AUGUST 2012
PROJ	378217
DWG	90-D-103
SHEET	

RECORD DRAWINGS FOR PERMIT

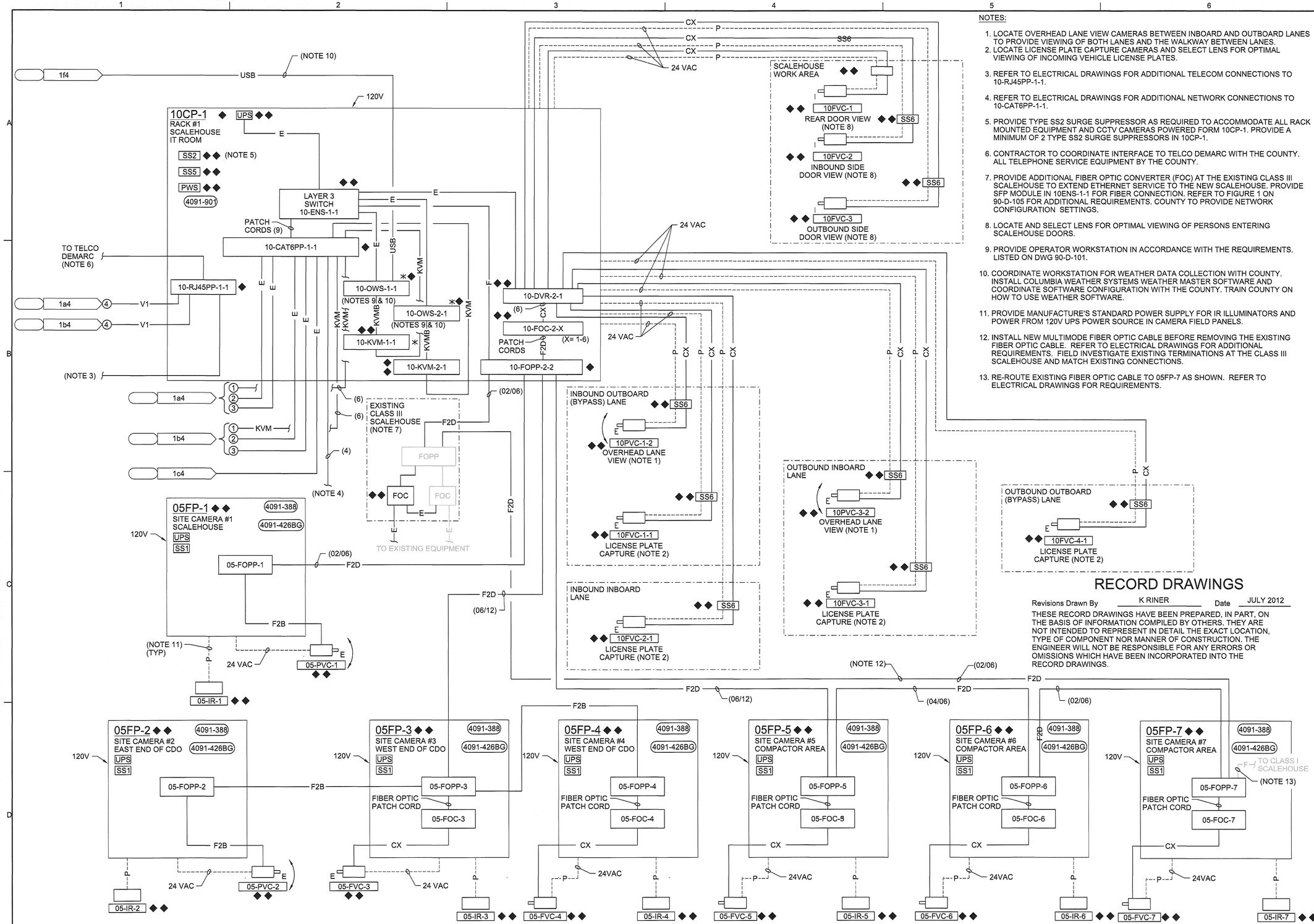

NOTES:

1. LOCATE OVERHEAD LANE VIEW CAMERAS BETWEEN INBOARD AND OUTBOARD LANES TO PROVIDE VIEWING OF BOTH LANES AND THE WALKWAY BETWEEN LANES.
2. LOCATE LICENSE PLATE CAPTURE CAMERAS AND SELECT LENS FOR OPTIMAL VIEWING OF INCOMING VEHICLE LICENSE PLATES.
3. REFER TO ELECTRICAL DRAWINGS FOR ADDITIONAL TELECOM CONNECTIONS TO 10-RJ45PP-1-1.
4. REFER TO ELECTRICAL DRAWINGS FOR ADDITIONAL NETWORK CONNECTIONS TO 10-CAT6PP-1-1.
5. PROVIDE TYPE SS2 SURGE SUPPRESSOR AS REQUIRED TO ACCOMMODATE ALL RACK MOUNTED EQUIPMENT AND CCTV CAMERAS POWERED FORM 10CP-1. PROVIDE A MINIMUM OF 2 TYPE SS2 SURGE SUPPRESSORS IN 10CP-1.
6. CONTRACTOR TO COORDINATE INTERFACE TO TELCO DEMARC WITH THE COUNTY. ALL TELEPHONE SERVICE EQUIPMENT BY THE COUNTY.
7. PROVIDE ADDITIONAL FIBER OPTIC CONVERTER (FOC) AT THE EXISTING CLASS III SCALEHOUSE TO EXTEND ETHERNET SERVICE TO THE NEW SCALEHOUSE. PROVIDE SFP MODULE IN 10ENS-1-1 FOR FIBER CONNECTION. REFER TO FIGURE 1 ON 90-D-105 FOR ADDITIONAL REQUIREMENTS. COUNTY TO PROVIDE NETWORK CONFIGURATION SETTINGS.
8. LOCATE AND SELECT LENS FOR OPTIMAL VIEWING OF PERSONS ENTERING SCALEHOUSE DOORS.
9. PROVIDE OPERATOR WORKSTATION IN ACCORDANCE WITH THE REQUIREMENTS. LISTED ON DWG 90-D-101.
10. COORDINATE WORKSTATION FOR WEATHER DATA COLLECTION WITH COUNTY. INSTALL COLUMBIA WEATHER SYSTEMS WEATHER MASTER SOFTWARE AND COORDINATE SOFTWARE CONFIGURATION WITH THE COUNTY. TRAIN COUNTY ON HOW TO USE WEATHER SOFTWARE.
11. PROVIDE MANUFACTURE'S STANDARD POWER SUPPLY FOR IR ILLUMINATORS AND POWER FROM 120V UPS POWER SOURCE IN CAMERA FIELD PANELS.
12. INSTALL NEW MULTIMODE FIBER OPTIC CABLE BEFORE REMOVING THE EXISTING FIBER OPTIC CABLE. REFER TO ELECTRICAL DRAWINGS FOR ADDITIONAL REQUIREMENTS. FIELD INVESTIGATE EXISTING TERMINATIONS AT THE CLASS III SCALEHOUSE AND MATCH EXISTING CONNECTIONS.
13. RE-ROUTE EXISTING FIBER OPTIC CABLE TO 05FP-7 AS SHOWN. REFER TO ELECTRICAL DRAWINGS FOR REQUIREMENTS.

RECORD DRAWINGS

Revisions Drawn By K RINER Date JULY 2012

THESE RECORD DRAWINGS HAVE BEEN PREPARED, IN PART, ON THE BASIS OF INFORMATION COMPILED BY OTHERS. THEY ARE NOT INTENDED TO REPRESENT IN DETAIL THE EXACT LOCATION, TYPE OF COMPONENT NOR MANNER OF CONSTRUCTION. THE ENGINEER WILL NOT BE RESPONSIBLE FOR ANY ERRORS OR OMISSIONS WHICH HAVE BEEN INCORPORATED INTO THE RECORD DRAWINGS.

NORMAN ANDERSON ★ ENGINEER ★ PROFESSIONAL
LICENSE No 71642 STATE OF FLORIDA

NO.	DATE	DSGN	REVISION	CHK	BY	APVD
	N ANDERSON	DR	A CLOUGH	WR PHILLIPS	N ANDERSON	APVD

©CH2M HILL 2010. ALL RIGHTS RESERVED.
THE IDEAS AND DESIGNS INCORPORATED HEREIN, AS AN INSTRUMENT OF PROFESSIONAL SERVICE, IS THE PROPERTY OF CH2M HILL AND IS NOT TO BE USED, IN WHOLE OR IN PART, FOR ANY OTHER PROJECT WITHOUT THE WRITTEN AUTHORIZATION OF CH2M HILL.
REUSE OF DOCUMENTS: THIS DOCUMENT, AND THE IDEAS AND DESIGNS INCORPORATED HEREIN, AS AN INSTRUMENT OF PROFESSIONAL SERVICE, IS THE PROPERTY OF CH2M HILL AND IS NOT TO BE USED, IN WHOLE OR IN PART, FOR ANY OTHER PROJECT WITHOUT THE WRITTEN AUTHORIZATION OF CH2MHILL.

3011 SW WILLISTON RD
GAINESVILLE, FLORIDA 32608
EB0000072 AAC001992
NORMAN E ANDERSON - PE 71642

CH2MHILL

SOLID WASTE SYSTEM
UPGRADE DESIGN
PASCO COUNTY
PASCO COUNTY, FLORIDA

INSTRUMENTATION AND CONTROL
WEST PASCO SITE
CONTROL SYSTEM
BLOCK DIAGRAM

RECORD DRAWINGS FOR PERMIT

VERIFY SCALE
BAR IS ONE INCH ON ORIGINAL DRAWING.
0 1"

DATE	AUGUST 2012
PROJ	378217
DWG	90-D-104
SHEET	

NDM SERVER: GNV FILENAME: dn90D604_378217.dgn PLOT DATE: 8/3/2012 PLOT TIME: 11:23:59 AM

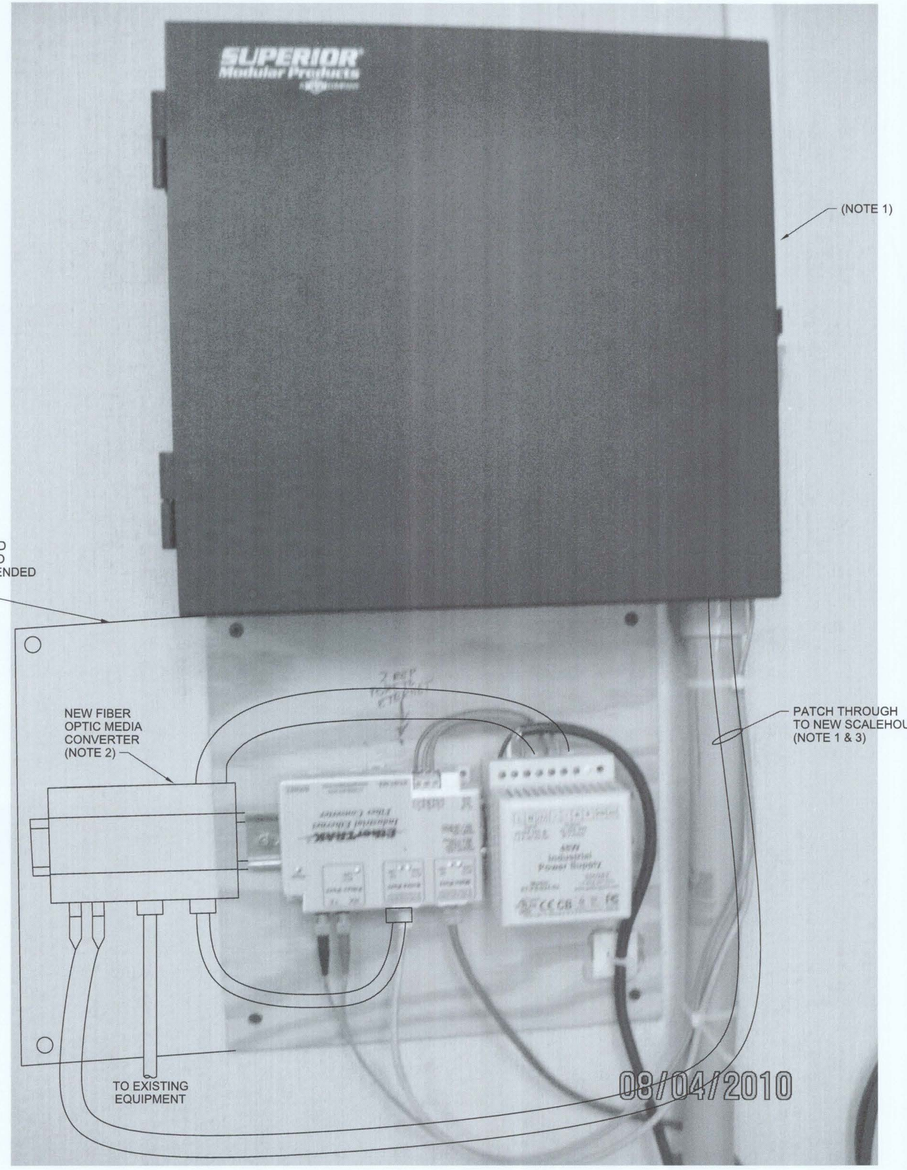

NOTES:

1. PATCH FIBER THROUGH EXISTING WALL MOUNT FIBER ENCLOSURE FOR EXTENSION TO NEW SCALEHOUSE. PROVIDE ADAPTER PANELS AS REQUIRED TO TERMINATE 100% OF FIBER.
2. EXTEND DIN RAIL AND MOUNT NEW FIBER OPTIC MEDIA CONVERTER ADJACENT TO EXISTING MEDIA CONVERTER. POWER NEW MEDIA CONVERTER USING EXISTING 24VDC POWER SUPPLY. PROVIDE ETHERNET CONNECTIONS AS SHOWN TO RECONNECT EXISTING EQUIPMENT AND TO PROVIDE FIBER OPTIC ETHERNET INTERFACE TO THE NEW SCALEHOUSE.
3. ORGANIZE AND RESTRAIN CABLES USING REMOVABLE HOOK AND LOOP TYPE NYLON CABLE WRAPS. RIP-TIE ECONOWRAP, OR EQUAL.
4. FIGURES ARE PROVIDED FOR REFERENCE. ALL EQUIPMENT MUST BE FIELD VERIFIED.

FIGURE 1: CLASS III SCALEHOUSE NETWORK EQUIPMENT

NTS

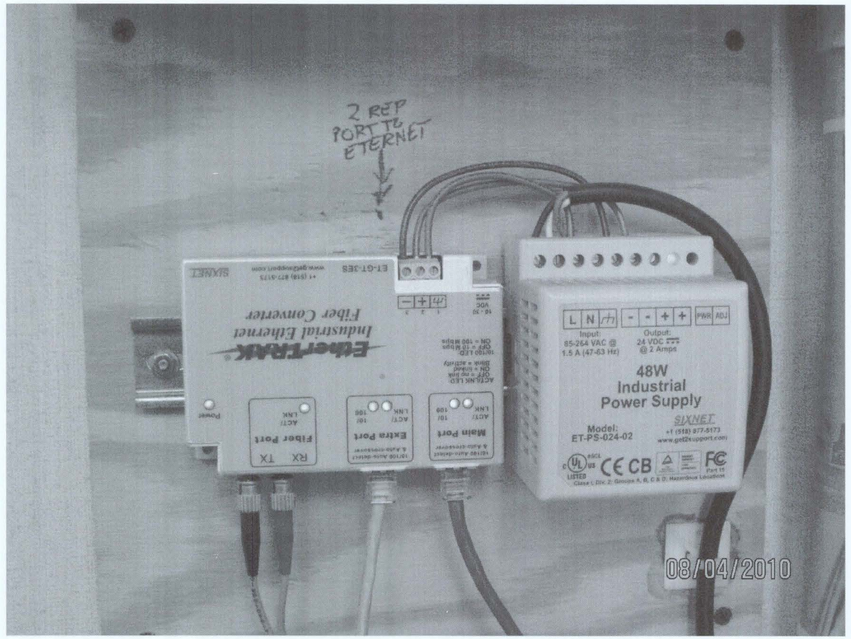

FIGURE 2: ENLARGED NETWORK EQUIPMENT PHOTO

NTS

RECORD DRAWINGS

Revisions Drawn By K RINER Date JULY 2012

THESE RECORD DRAWINGS HAVE BEEN PREPARED, IN PART, ON THE BASIS OF INFORMATION COMPILED BY OTHERS. THEY ARE NOT INTENDED TO REPRESENT IN DETAIL THE EXACT LOCATION, TYPE OF COMPONENT NOR MANNER OF CONSTRUCTION. THE ENGINEER WILL NOT BE RESPONSIBLE FOR ANY ERRORS OR OMISSIONS WHICH HAVE BEEN INCORPORATED INTO THE RECORD DRAWINGS.

NORMAN E. ANDERSON LICENSED PROFESSIONAL ENGINEER STATE OF FLORIDA

NO.	DATE	REVISION	BY	APVD
DSGN	N ANDERSON	DR A.CLOUGH CHK WR PHILLIPS	APVD	N ANDERSON

3011 SW WILLISTON RD
GAINESVILLE, FLORIDA 32608
EB0600072 AAC001982
NORMAN E ANDERSON - PE 71642

SOLID WASTE SYSTEM
UPGRADE DESIGN
PASCO COUNTY
PASCO COUNTY, FLORIDA

CH2MHILL

INSTRUMENTATION AND CONTROL
WEST PASCO SITE
FIGURES

FLORIDA DEPARTMENT OF ENVIRONMENTAL PROTECTION
AUG 07 2012
SOUTHWEST DISTRICT
TAMPA

VERIFY SCALE
BAR IS ONE INCH ON ORIGINAL DRAWING.
0 1"

DATE	AUGUST 2012
PROJ	378217
DWG	90-D-105
SHEET	

REUSE OF DOCUMENTS: THIS DOCUMENT, AND THE IDEAS AND DESIGNS INCORPORATED HEREIN, AS AN INSTRUMENT OF PROFESSIONAL SERVICE, IS THE PROPERTY OF CH2M HILL AND IS NOT TO BE USED, IN WHOLE OR IN PART, FOR ANY OTHER PROJECT WITHOUT THE WRITTEN AUTHORIZATION OF CH2MHILL

©CH2M HILL 2010. ALL RIGHTS RESERVED.

RECORD DRAWINGS FOR PERMIT