The engineer expressly reserves the exclusive common law copyright and property rights to these drawings which may not be reproduced, changed or copied in any form or manner, nor are they to be assigned to any party without the engineers written consent.

952934
(1)

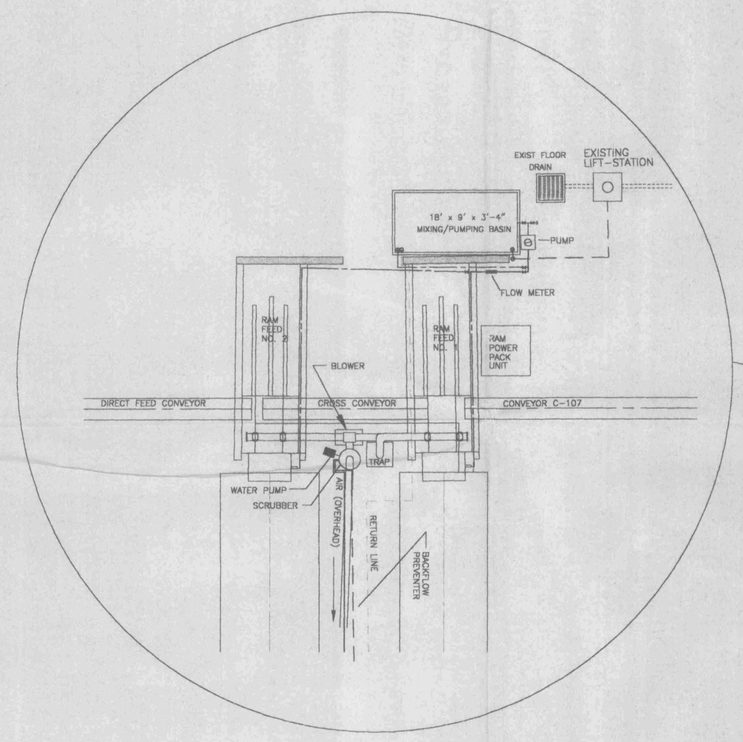

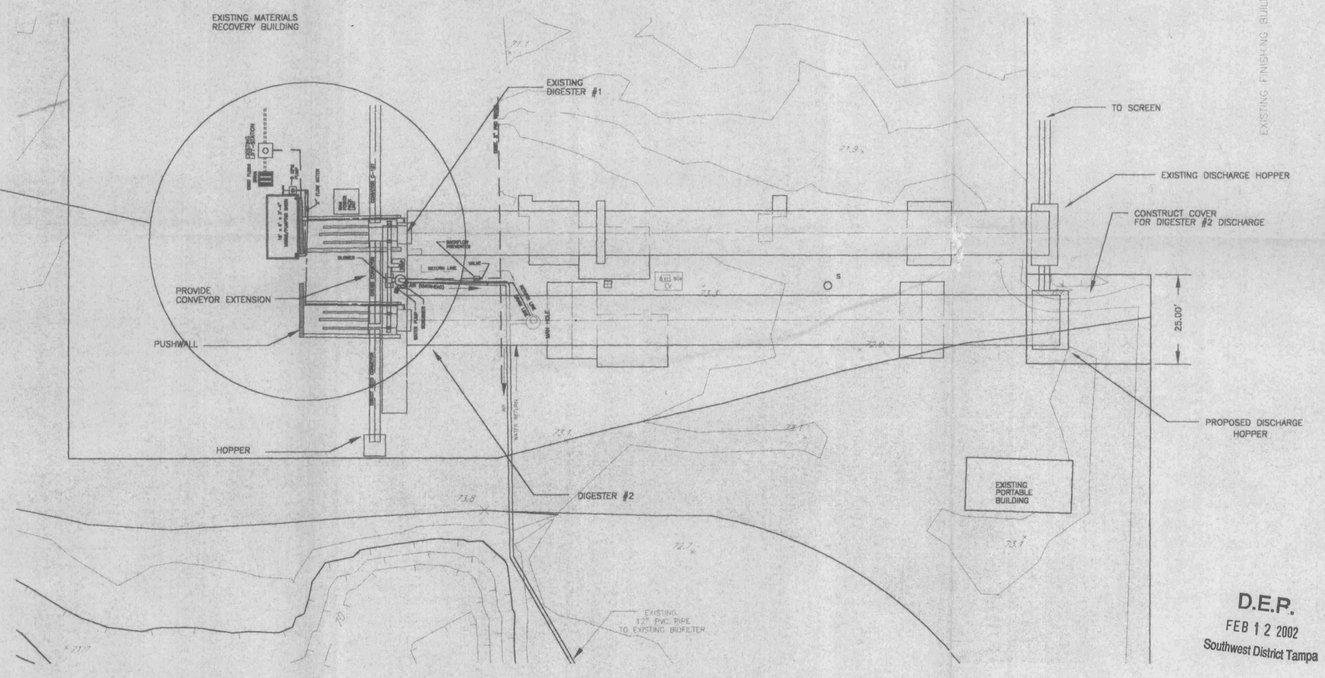

N

SCALE: 1" = 20'

D.E.P.
FEB 12 2002
Southwest District Tampa

DAVID W. SPRINGSTEAD, P.E.
FLORIDA REGISTRATION NO. 48229

REV. BY:	DESCRIPTION	DATE:	DRAWN

CLIENT: SUMTER COUNTY BOARD OF COUNTY COMMISSIONERS

PROJECT: SUMTER COUNTY SOLID WASTE FACILITY

DRAWING: FORCE INFEED/DISCHARGE PLAN

1 of 1

Springstead Engineering, inc.
Consulting Engineers
Architects, Planners
Surveyors
EB-0001723
LB-0001723 AA-0002820
727 South 14th Street
Leesburg, Fl. 34748
(352) 787-1414

SCALE:	FILE:	DATE:
1"=20'	INFEED	1/30/02
DESIGN:	DRAWN:	CHECKED:

DRAWING: INFEED/DISCHARGE PLAN

CLIENT: SCBCC

JOB NO.:	SHEET:
921100.015	1 OF: 1

FILE ONLY

Land Projects R2\921100.015\dwg\infeed.dwg, Model, 02/11/02 04:44:15 PM, ***VS***

The engineer expressly reserves the exclusive common law copyright and property rights to these drawings which may not be reproduced, changed or copied in any form or manner, nor are they to be assigned to any party without the engineers written consent.

C:\ACAD12\DWGS\92-1100.000\DWS\RAMWALL Thu Feb 27 13:35:48 1997 ***.NCH ***

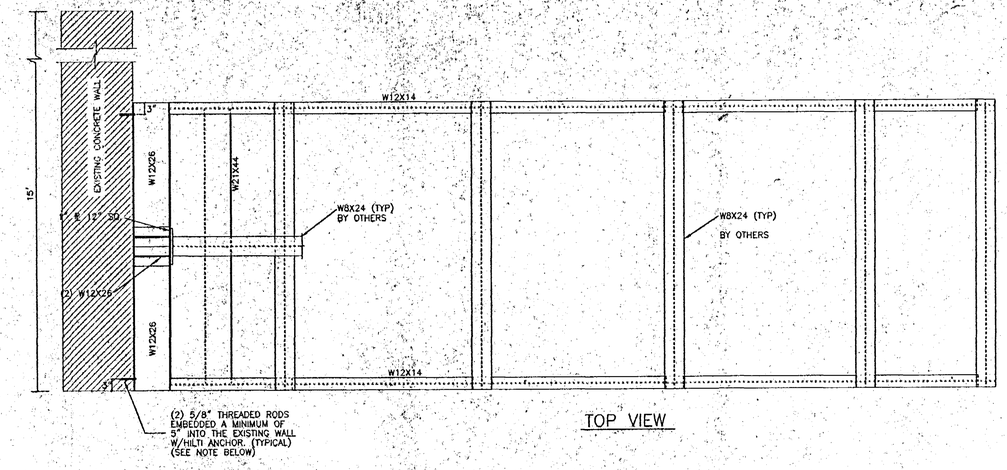

TOP VIEW

NO.	MATERIAL	DESCRIPTION	APPROXIMATE QUANTITIES	
			LF	WT (LBS)
1	W6X9	COLUMNS & BRACING	115	1035
2	W12X14	BEAMS	100	1400
3	W12X26	PUSH BEAM	40	1040
4	W21X44	BEAM	8	350
			TOTAL WEIGHT	3825

NOTE: 1/4" ℞ WEB STIFFENERS AT ALL CONNECTIONS.

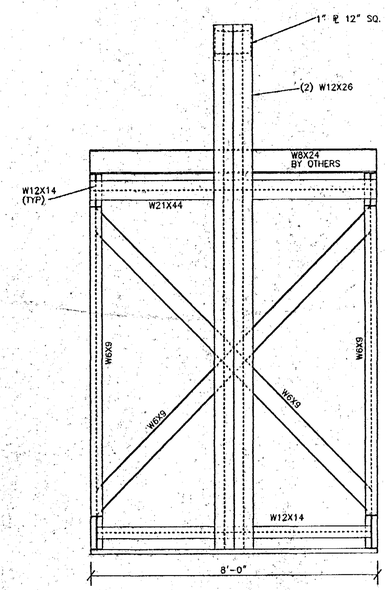

BACK VIEW

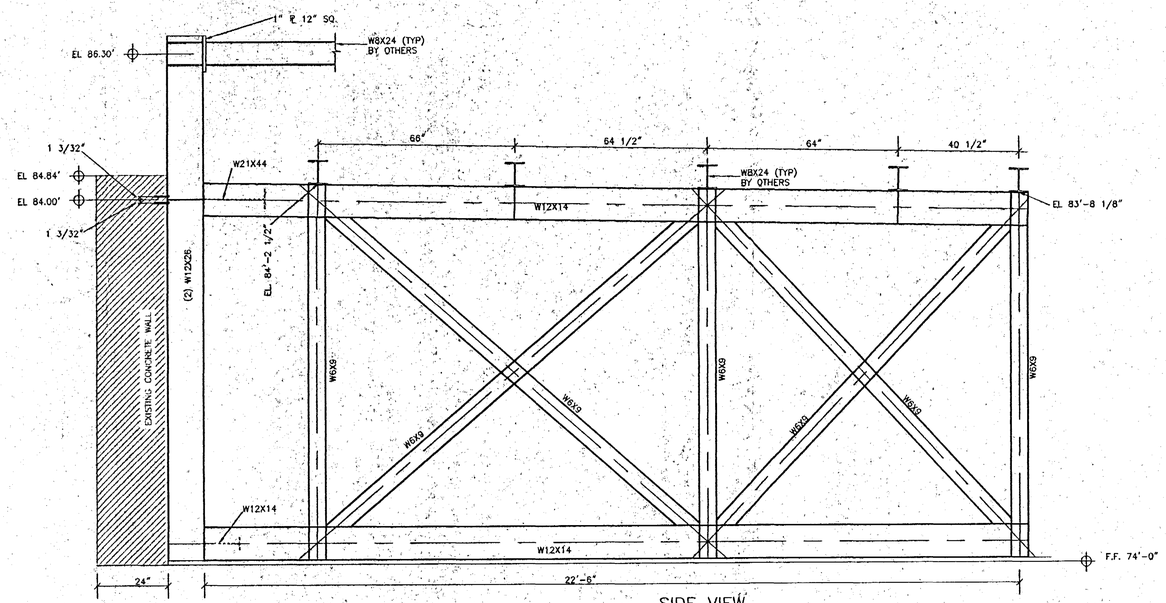

SIDE VIEW

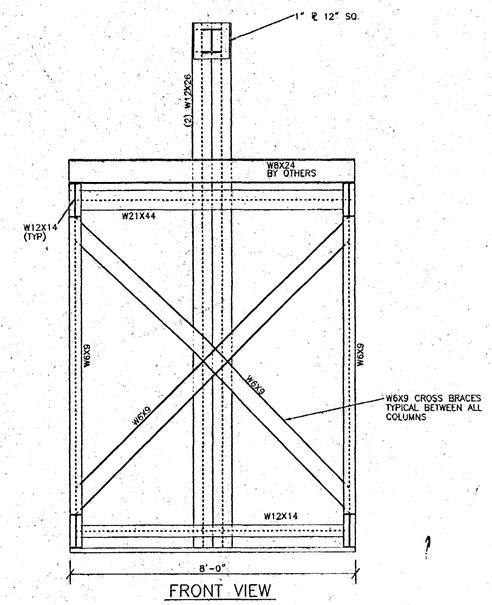

FRONT VIEW

NOTES:

1. 5/8" THREADED ROD W/DOUBLE NUT EMBEDDED A MINIMUM OF 5" INTO THE SLAB. HOLES DRILLED TO 11/16" DIAMETER.
2. USE HILTI HY150 INJECTION ADHESIVE ANCHOR OR EQUAL. THREADED ROD SHALL MEET ASTM A36.
3. STRUCTURAL STEEL SHALL CONFORM TO ASTM A36 OR BETTER.
4. WELDS SHALL HAVE A MIN. TENSILE STRENGTH OF 70 ksi.
5. GROUT SHALL HAVE 2000 PSI, 28 DAY COMPRESSIVE STRENGTH.

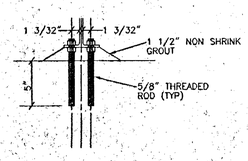

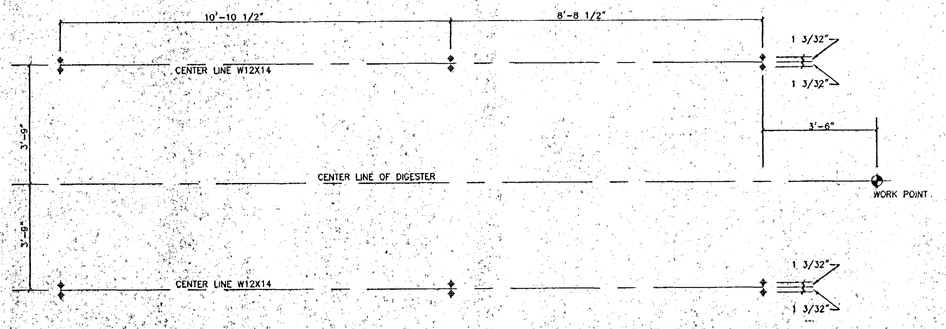

DAVID W. SPRINGSTEAD, P.E.
FLORIDA REGISTRATION NO. 48229

REV. BY:	DESCRIPTION	DATE:	DRAWN:

CLIENT: SUMTER COUNTY BOARD OF COUNTY COMMISSIONERS

PROJECT: SOLID WASTE MANAGEMENT FACILITY

DRAWING: RAM WALL

1 of 1

Springstead Engineering, Inc.

Consulting Engineers
Architects
Planners
Surveyors

727 South 14th Street
Leesburg, Fl. 34748
(352) 787-1414

SCALE:	FILE:	DATE:
1"=2'	RAMWALL	02/20/97
DESIGN:	DRAWN:	CHECKED:

DRAWING: RAM WALL

CLIENT: SUMTER COUNTY BOARD OF COUNTY COMMISSIONERS

JOB NO.:	SHEET:
921100.000	1 OF: 1

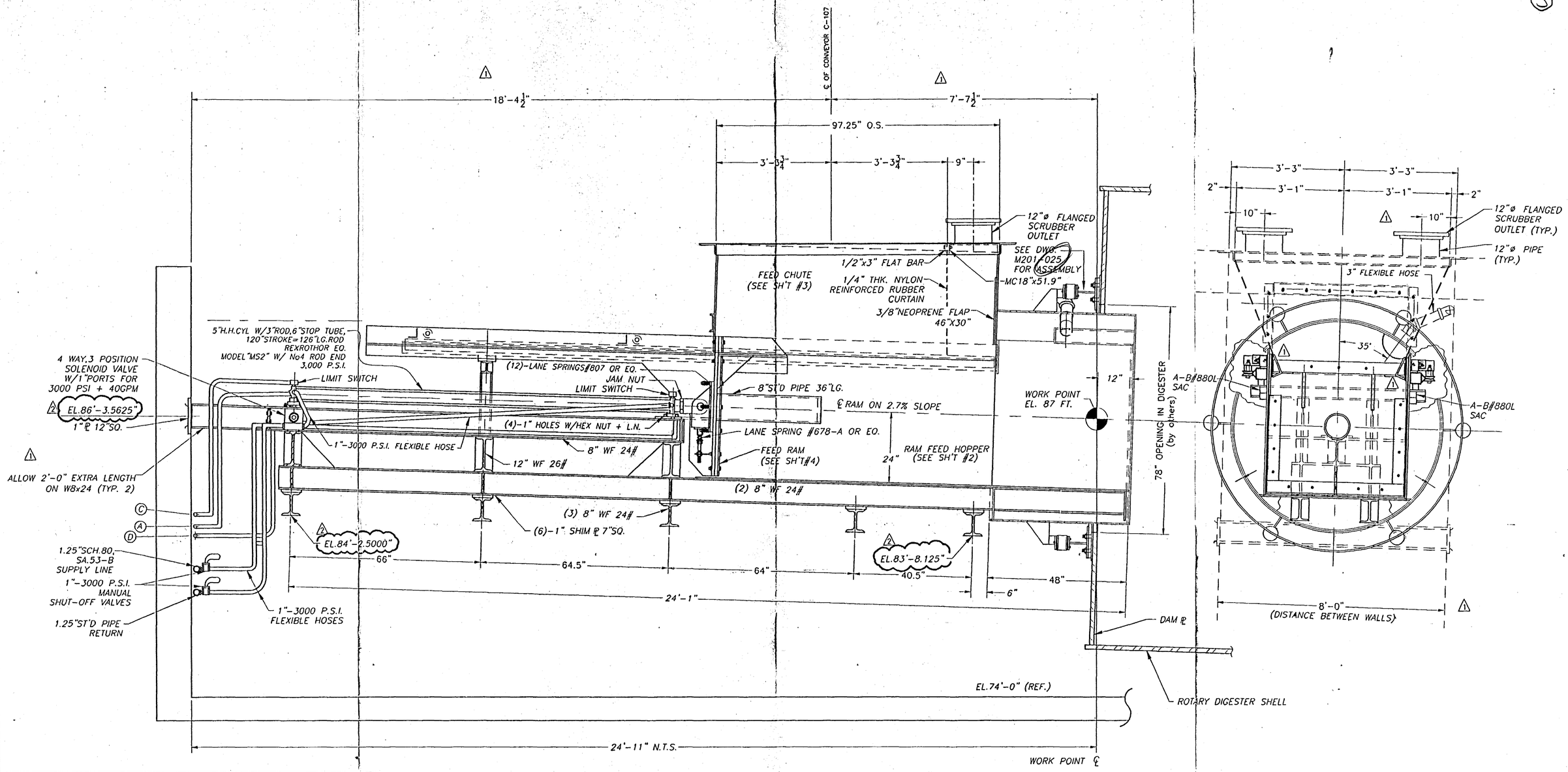

PAINT SPECIFICATIONS:

1. SURFACE PREPARATION: COMMERCIAL BLAST CLEANING SPECIFICATION SSPC-SP 6.
2. SHOP PRIMER: SERIES 66-1211 EPOXOLINE PRIMER APPLIED AT A DRY FILM THICKNESS OF 3.0 - 5.0 MILS.
3. FIRST FULL SHOP COAT: SERIES 66-COLOR HI-BUILD EPOXOLINE APPLIED AT A DRY FILM THICKNESS OF 4.0 - 6.0 MILS. *
4. FINISH SHOP COAT: SERIES 66-COLOR HI-BUILD EPOXOLINE APPLIED AT A DRY FILM THICKNESS OF 4.0 - 6.0 MILS.
5. APPLY PAINT IN ACCORDANCE WITH MANUFACTURER'S RECOMMENDATIONS AND JOB SPECIFICATIONS.

* COLOR OF SERIES 66 HI-BUILD EPOXOLINE INTERMEDIATE COLOR SHALL BE SIMILAR IN COLOR TO SELECTED FINISH COAT TO PROVIDE MAXIMUM ASSURANCE FOR GOOD HIDING AND AESTHETICS.

D	FRONT LIMIT SWITCH
C	BACK LIMIT SWITCH
A	HYDRAULIC VALVE
MK	ELECTRICAL WIRING TO:

RAM FEED ELEVATION VIEW

DAVID W. SPRINGSTEAD, P.E.
FLORIDA REGISTRATION NO. 48229

ISSUE FOR CONSTRUCTION
FEB 26 1997

JOB NAME: BEDMINSTER - SUMTER COUNTY, FL.

REFERENCE DRAWINGS	DRAWING NO.
–	–

EPCON, INC.
ENGINEERING PROCUREMENT CONSTRUCTION
JOB #60201

EPCON-LEMOINE, LLC
ENGINEERING PROCUREMENT CONSTRUCTION

NO.	DATE	REVISIONS	BY	CK.	APPR.	APPR.
0	10/28/96	ISSUE FOR CONSTRUCTION	KRW	JS	JCS	
1	11/11/96	REVISED AS NOTED	KRW	JS	JCS	
2	02/22/97	REVISE AS NOTED	KRW			

DRAWN	PROJ. ENGR.	SECT. SUPT.	APPROVED
KRW			
CHECKER JS	APPROVED JCS	APPROVED	APPROVED

FEED RAM FOR 12'-6" DIA. DIGESTER

DATE	DRAWING NO.	REV. NO.	SHEET NO.
9/12/96	M201-020	1	1 OF 1
SCALE 3/4"=1'-0"			

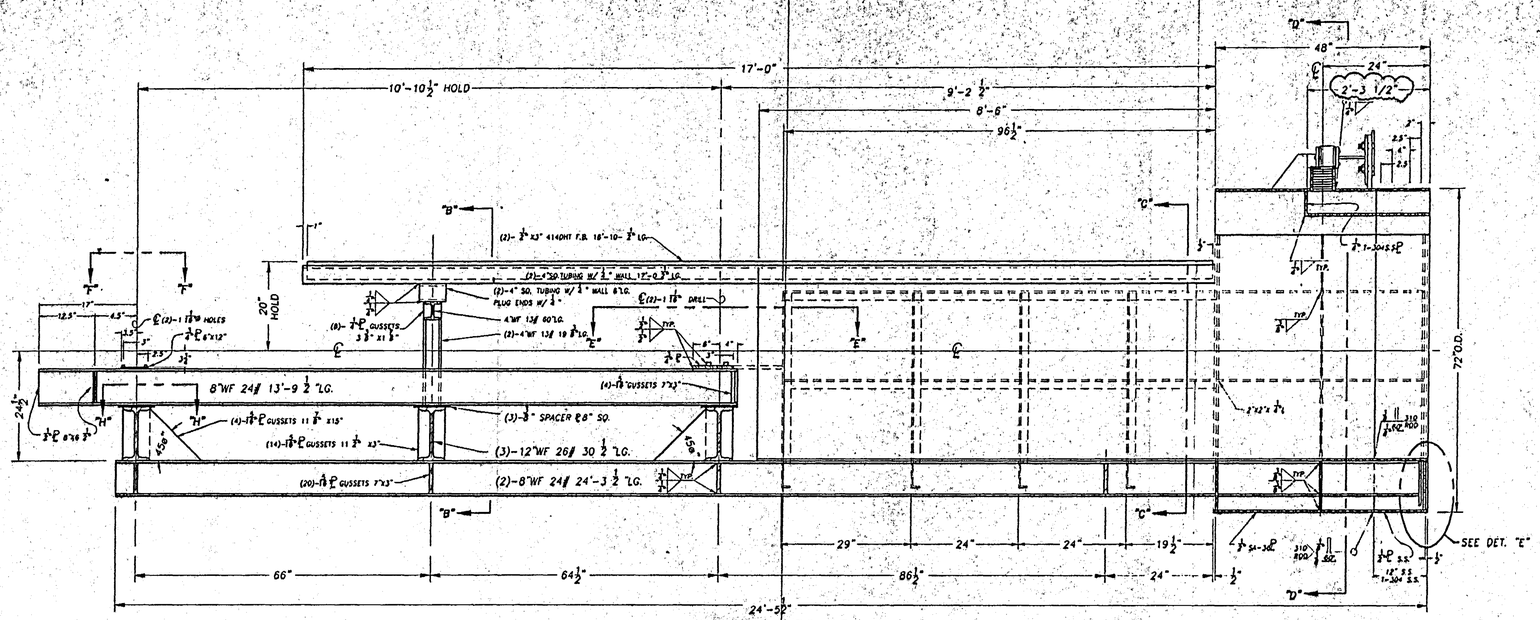

SECTION "A-A"
SCALE: 1"=1'

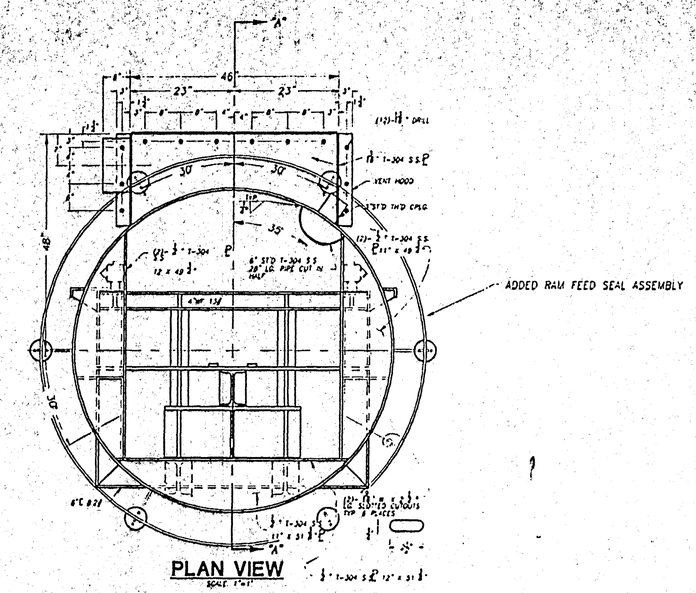

PLAN VIEW
SCALE: 1"=1'

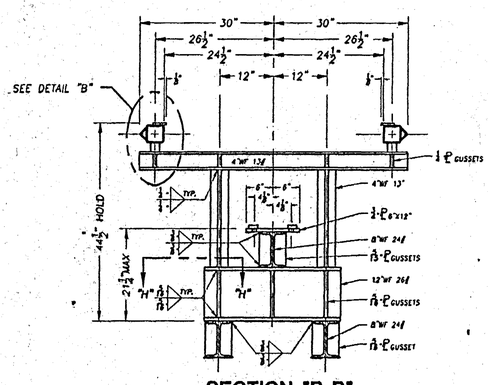

SECTION "B-B"
SCALE: 1"=1'

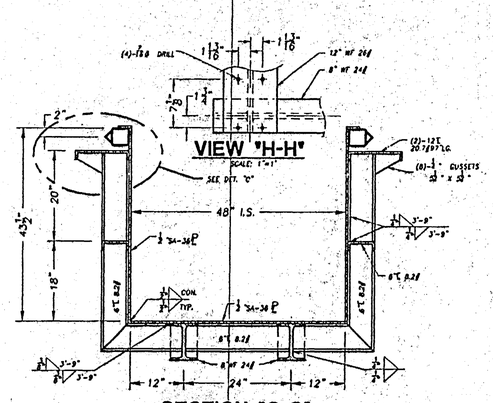

VIEW "H-H"
SCALE: 1"=1'

SECTION "C-C"
SCALE: 1"=1'

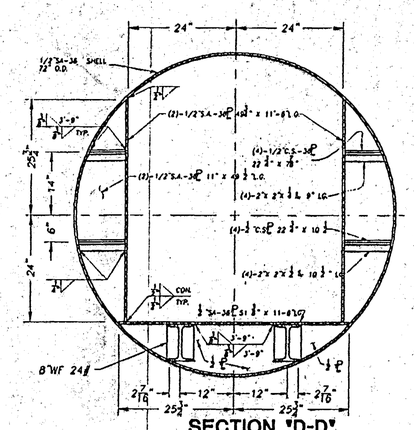

SECTION "D-D"
SCALE: 1"=1'

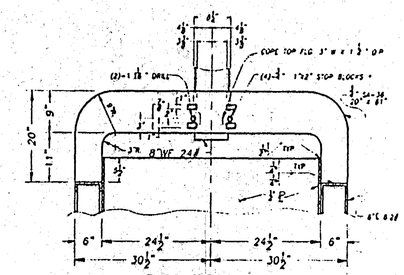

SECTION "E-E"
SCALE: 1"=1'

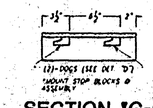

SECTION "G-G"
SCALE: 2"=3"

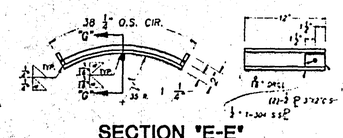

SECTION "E-E"
8" ROD SCALE: 2"=3"

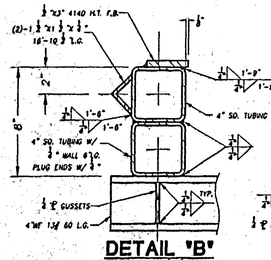

DETAIL "B"
SCALE: 1"=1'

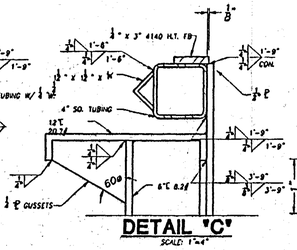

DETAIL "C"
SCALE: 1"=1'

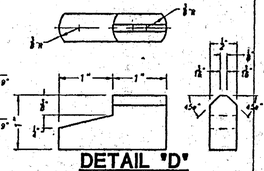

DETAIL "D"
SCALE: 1"=1"

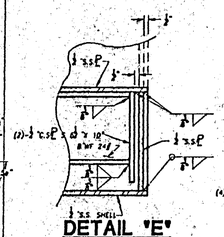

DETAIL "E"
SCALE: 2"=3"

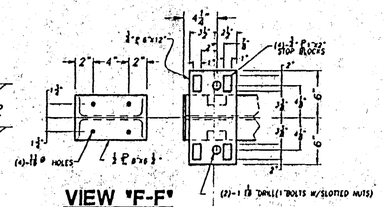

VIEW "F-F"
SCALE: 4"=1"

PROPRIETARY INFORMATION

NOTE:

1. SEE DWG. M201-020 FOR PAINT SPECIFICATION

JOB NAME: BEDMINSTER – SUMTER COUNTY, FL.

REFERENCE DRAWINGS	DRAWING NO.
–	–

EPCON, INC.
ENGINEERING PROCUREMENT CONSTRUCTION

JOB #60201

EPCON-LEMOINE, LLC
ENGINEERING PROCUREMENT CONSTRUCTION

NO.	DATE	REVISIONS	BY	CK.	APPR.	APPR.
0	10/28/96	ISSUE FOR CONSTRUCTION	KRW			

DRAWN	PROJ ENGR	SECT SUPT	APPROVED
KRW			
CHECKER	APPROVED	APPROVED	APPROVED

FEED RAM
FOR 12'-6" DIA. DIGESTER

DATE	DRAWING NO	REV NO	SHEET NO
9/12/96	M201-021	0	1 OF 1
SCALE AS NOTED			

DAVID W. SPRINGSTEAD, P.E.
FLORIDA REGISTRATION NO. 48929

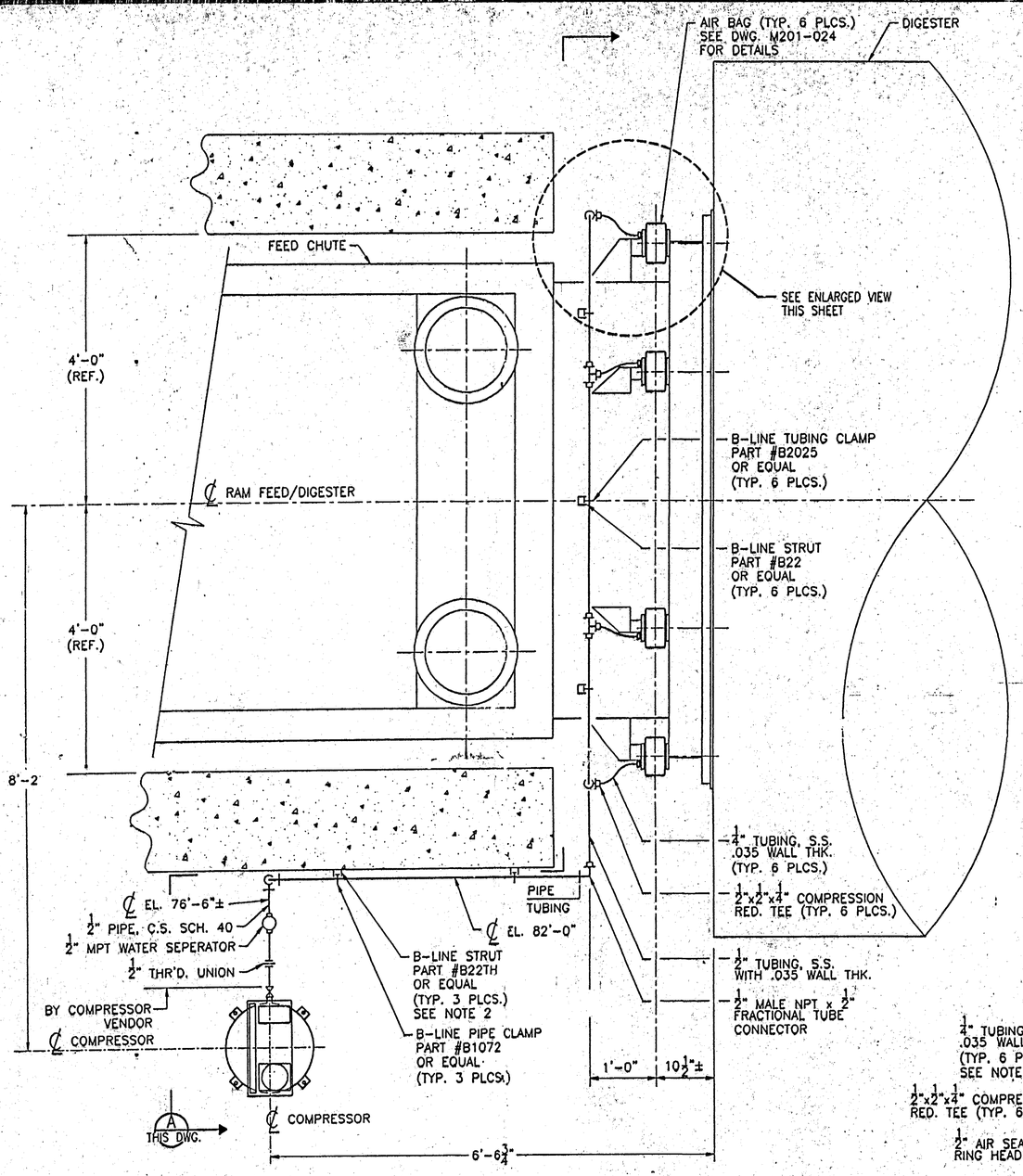

PLAN VIEW
SCALE: 1" = 1'-0"

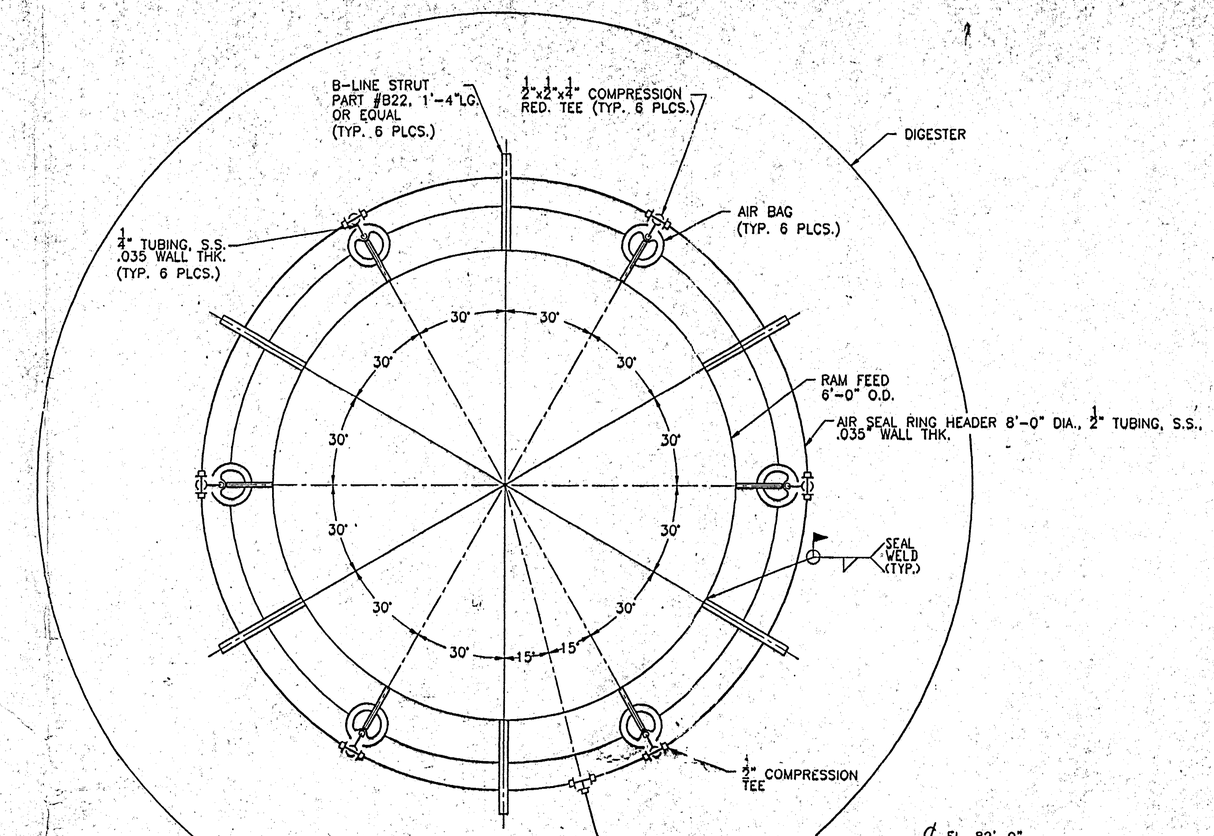

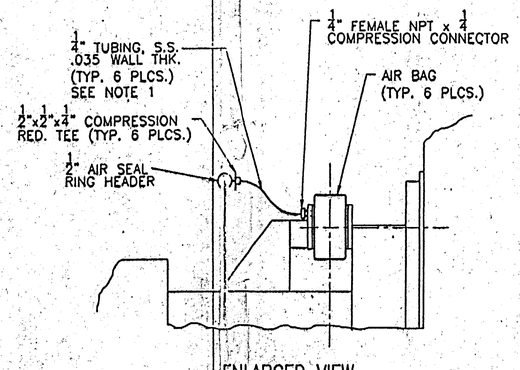

ENLARGED VIEW
SCALE: 1 1/2" = 1'-0"

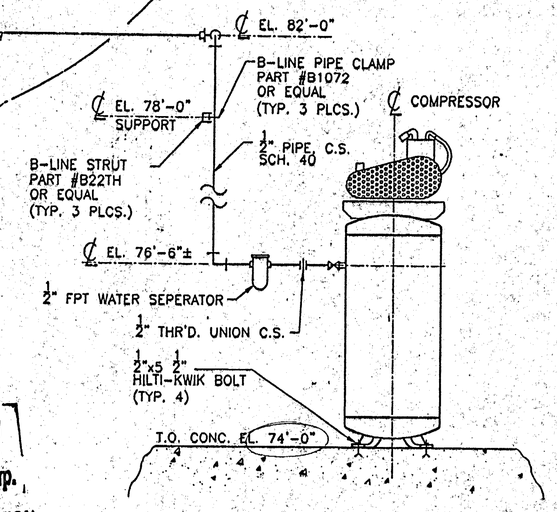

SETION A-A
SCALE: 1" = 1'-0"

Confidential and Proprietary Information of the Bedminster Bioconversion Corp.

ISSUED FOR CONSTRUCTION
DEC 03 1996

NOTES:
1. TUBING BENDS TO BE 5 DIAMETER MINIMUM.
2. FIELD TO HILTI-KWIK BOLT UNISTRUT TO WALL AS REQUIRED.
3. TUBING TO BE SS-304, FITTINGS TO BE SS-316.

JOB NAME: BEDMINSTER – SUMTER COUNTY, FL.

REFERENCE DRAWINGS	DRAWING NO.
FEED RAM FOR 12'-6" DIA. DIGESTER	M201-020
FEED RAM FOR 12'-6" DIA. DIGESTER	M201-024
GENERAL ARRANGEMENT	M201-025

EPCON, INC.
ENGINEERING PROCUREMENT CONSTRUCTION
JOB #60201

EPCON-LEMOINE, LLC
ENGINEERING PROCUREMENT CONSTRUCTION

NO.	DATE	REVISIONS	BY	CK.	APPR.	APPR.
0	12/04/96	ISSUE FOR CONSTRUCTION	KRW			

DRAWN	PROJ. ENGR.	SECT. SUPT.	APPROVED
KRW			
CHECKED	APPROVED	APPROVED	APPROVED

DAVID W. SPRINGSTEAD, P.E.
FLORIDA REGISTRATION NO. 48229

AIR BAG SEAL PIPING PLAN

DATE	DRAWING NO.	REV. NO.	SHEET NO.
11/12/96	M201-029	0	1 OF 1
SCALE: AS NOTED			