BRANTLEY
ENGINEERING, LLC

December 15, 2015

Mr. F. Thomas Lubozynski, P.E.
Environmental Administrator, Permitting and WCU
Waste, Air & Stormwater Permitting
Florida Department of Environmental Protection (FDEP), Central District
3319 Maguire Blvd., Suite 232
Orlando, Florida 32803-3767

Subject: **Explanation of Deviations - Submittal for Landfill Gas Collection and Control System (GCCS) - LFGTE Conveyance Pipeline Construction**
JED Solid Waste Management Facility
St. Cloud, Osceola County, Florida
FDEP Construction Permit No. SC-49-0199726-017 &
Operational Permit No. SO-49-0199726-022

Dear Mr. Lubozynski:

Brantley Engineering, LLC is writing to provide documentation and certification for the deviations required during construction of the Gas Collection and Control Systems (GCCS) LFGTE Conveyance Pipeline Construction project for the JED Solid Waste Management Facility (facility) located in Osceola County, Florida.

As previously submitted in the Notice of Construction Completion dated November 9, 2015, the following minor deviations to the construction drawings were made with an explanation of why they were required:

- Detail 6 on Sheet 4 was revised to include a 24" valve instead of an 18" valve. ***(Omni had transitioned from a 28" diameter pipe size to a 24" pipe size at the future connection and sump tie-in locations due to availability of fittings and valves. 28" diameter fittings and valves are not readily available. A 24" valve was substituted for an 18" valve at the future tie-in location because the tee fitting at that location was sized at 24", which negated the need for a 24" X 18" reducer fitting.***
- Detail 3 on Sheet 5 was revised to include only one 12" vertical cleanout. ***(Omni substituted a 12" diameter vertical cleanout for the two "Y" type cleanouts shown on Detail 3/5 due to availability and cost for two 8" fittings. Omni consulted with a 3rd party contractor to assure the 12" diameter cleanout was sufficient for flushing and video inspection of the conveyance pipeline if needed.***

BRANTLEY ENGINEERING, LLC
13933 Tree Loft Road
Milton, Georgia 30004
Phone: 678-427-2533
Fax: 415-598-2533
abrantley@brantleyeng.com

- Detail 2 on Sheet 6 was revised to include a 24" valve instead of a 28" valve. ***(24" valves are more readily available than a 28" valves. This allows for a more timely repair if required in the future)***
- Sheet 3A does not show an additional 24" condensate sump installed near station 3+00.
  (Omni selected to install another low point sump at this location due to the horizontal distance and elevation difference between Stations 2+00 and 19+33. Adding the sump allowed for ease of construction of the exposed temporary pipeline and better management of condensate between the two locations)

In addition, please find attached the full set of construction permit drawings prepared by Golder Associates dated January 2015. Redlined deviations are shown on the drawings.

If you have any questions or need additional information regarding this certification, please contact me at (678)-427-2533 or Mike Kaiser with PWS at (904)-673-0446.

Sincerely,
Brantley Engineering, LLC

ALLAN S. BRANTLEY
LICENSE
No 68030
STATE OF
FLORIDA
PROFESSIONAL ENGINEER
12-15-15

Allan S. Brantley, Florida PE#68030
President

Cc: Allen Rainey, FDEP Central District
Mike Kaiser – PWS

Attachments

BRANTLEY ENGINEERING, LLC
A Woman-Owned Small Business

13933 Tree Loft Road
Milton, Georgia 30004
Phone: 678-427-2533
Fax: 415-598-2533
abrantley@brantleyeng.com

J.E.D. SOLID WASTE MANAGEMENT FACILITY

LANDFILL GAS COLLECTION AND CONTROL SYSTEM (GCCS) LFGTE CONVEYANCE PIPELINE CONSTRUCTION

ST. CLOUD, OSCEOLA COUNTY, FLORIDA

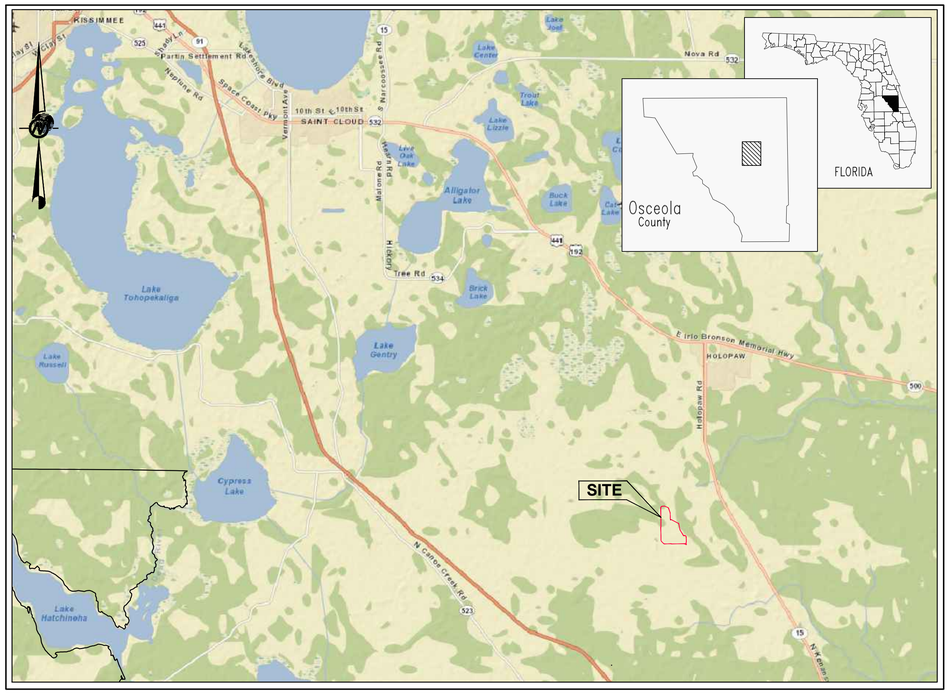

SITE LOCATION MAP

LIST OF DRAWINGS		
SHEET	TITLE	REVISION
1	TITLE SHEET	
2	EXISTING CONDITIONS	
3A	PROPOSED PIPE LAYOUT PLAN (1 OF 2)	
3B	PROPOSED PIPE LAYOUT PLAN (2 OF 2)	
3C	PROPOSED BERM CONTROL POINTS	
4	GCCS DETAILS (1 OF 3)	
5	GCCS DETAILS (2 OF 3)	
6	GCCS DETAILS (3 OF 3)	

Prepared for:

OMNI WASTE OF OSCEOLA COUNTY, LLC

Progressive Waste Solutions

1501 OMNI WAY
ST. CLOUD, FLORIDA 34773
TEL: 407-891-3720 FAX: 407-891-3730

Prepared by:

Golder Associates
Jacksonville, Florida

January 2015

Golder Associates
9428 Baymeadows Way, Suite 400
Jacksonville, Florida 32256
Tel: 904/363-3430 Fax: 904/363-3445
COA No. 1670

J.E.D. SOLID WASTE MANAGEMENT FACILITY
OSCEOLA COUNTY
FLORIDA

REDLINE ASBUILT

TITLE SHEET/LIST OF DRAWINGS

Kevin S. Brown, P.E.
Florida Registration No. 57819

SHEET 1

PROJECT No.: 083-82734 FILE No.: 08382734-M001 CADD: BCL DATE: 01/05/15

Drawing file: 08382734-M001.dwg Jan 20, 2015 - 1:00pm

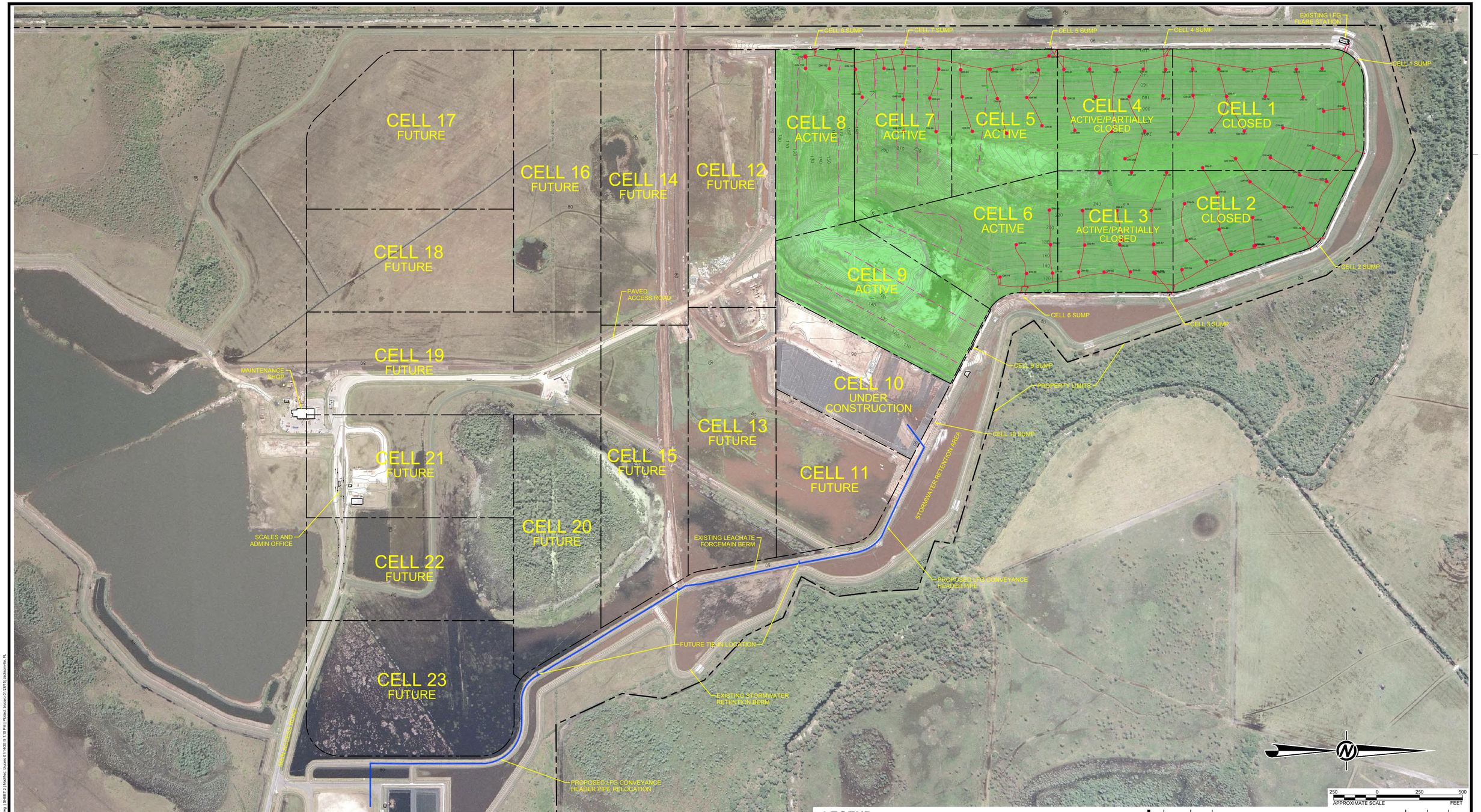

LEGEND

- GW-1 EXIST. LFG EXTRACTION WELL
- EXIST. HEADER/LATERAL
- HORIZONTAL GAS COLLECTOR
- CELL LIMIT
- ACTIVE GCCS

NOTES

1) AS-BUILT SURVEY TAKEN FROM JOHNSTON'S SURVEYING, INC. AND PEAVEY & ASSOCIATES SURVEYING AND MAPPING, PA.

2) NORTHING AND EASTING COORDINATES SHOWN REPRESENT FLORIDA STATE PLANE EAST ZONE NORTH AMERICAN DATUM OF 1983 (NAD83).THE ELEVATIONS SHOWN REPRESENT NATIONAL GEODETIC VERTICAL DATUM OF 1929 (NGVD29)(FEET).

3) TOPOGRAPHIC INFORMATION SHOWN ON THIS DRAWING WAS PROVIDED BY BASE MAPPING CO. LTD BASED ON AN AERIAL PHOTOGRAPH TAKEN ON MAY 16, 2014.

REV	DATE	DES	REVISION DESCRIPTION	CADD	CHK	RVW
1						

PROJECT

J.E.D. SOLID WASTE MANAGEMENT FACILITY
ST. CLOUD, OSCEOLA COUNTY, FLORIDA

TITLE

REDLINE ASBUILT

EXISTING CONDITIONS

Golder Associates

PROJECT No.		083-82734.37	FILE No.	08382734-M002
DESIGN	DEG	11/21/14	SCALE	AS SHOWN
CADD	BCL	11/25/14		
CHECK	.	.		
REVIEW	.	.		

SHEET 2

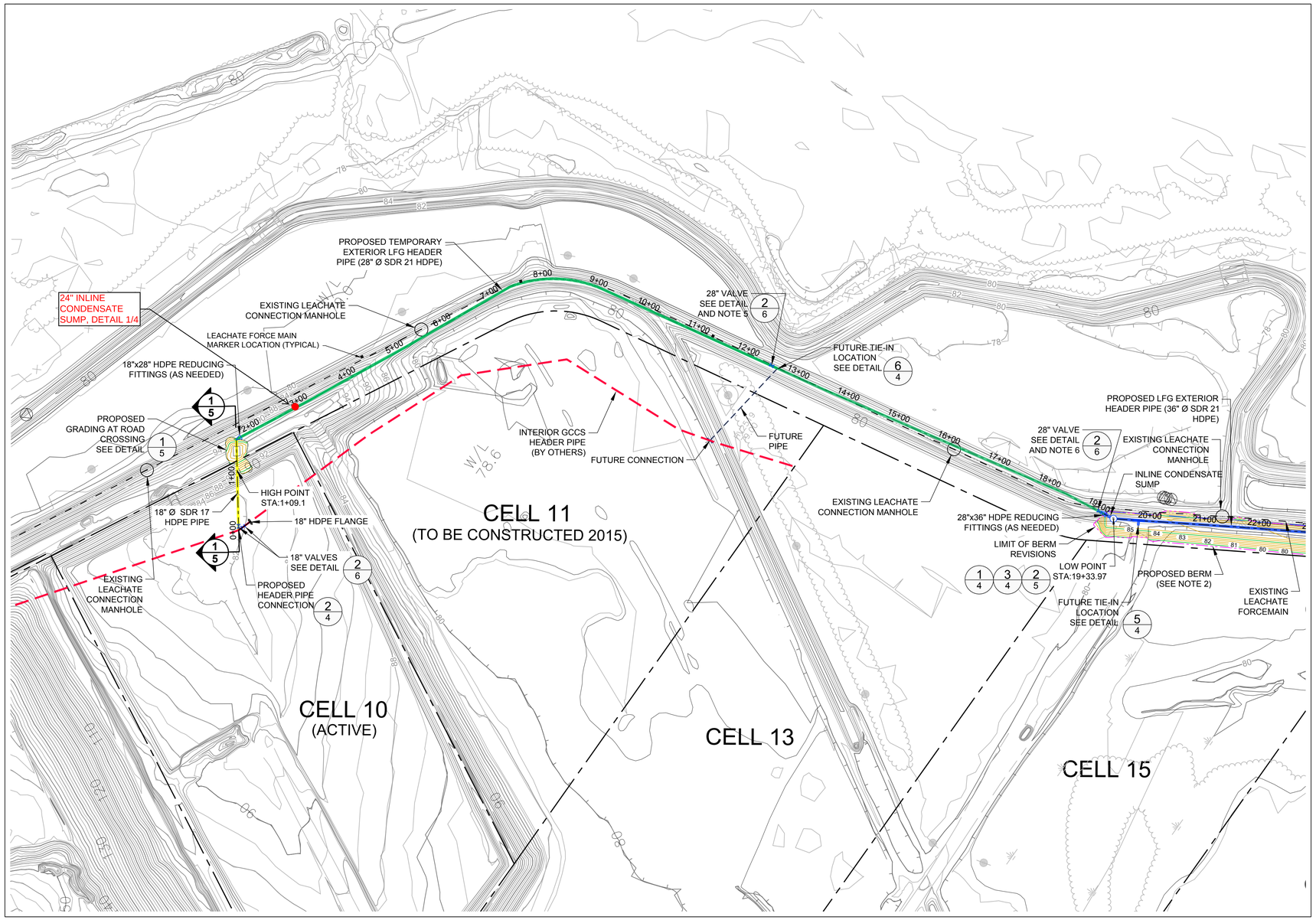

NOTES

1) CONDENSATE SUMPS WILL BE LOCATED AT ALL LOW POINTS. CLEANOUT/RISERS WILL BE LOCATED AT ALL HIGH POINTS ALONG LFGTE CONVEYANCE PIPE WITH SAMPLE PORTS.

2) EXISTING LANDFILL PERIMETER BERM TO BE MODIFIED IN SUPPORT OF PROPOSED PIPELINE. SEE DETAIL 5/5

3) TERMINATE 2"Ø AIR LINE AND 4"Ø FORCEMAIN AT STATION 19+24 (APPROXIMATELY 10 FT. FROM SUMP) WITH BUTT CAPS.

4) 28"Ø ABOVE GROUND PIPE TO BE BRACED WITH ONE OF THE FOLLOWING METHODS (OR APPROVED EQUIVALENT): REBAR, SOIL, OR STRAPS (ANCHORED TO CONCRETE BLOCKS).

5) 28" VALVE TO BE INSTALLED 10 FEET FROM 28" x 28" x 18" TEE.

6) 28" VALVE TO BE INSTALLED 10 FEET FROM INLINE CONDENSATE SUMP.

REV	DATE	DES	REVISION DESCRIPTION	CADD	CHK	RVW
1						

PROJECT

J.E.D. SOLID WASTE MANAGEMENT FACILITY
ST. CLOUD, OSCEOLA COUNTY, FLORIDA

TITLE

REDLINE ASBUILT

PROPOSED PIPE LAYOUT PLAN (1 OF 2)

Golder Associates

PROJECT No.		083-82734.37	FILE No.	08382734-M003
DESIGN	DEG	11/21/14	SCALE	AS SHOWN
CADD	BCL	11/25/14		
CHECK	.	.		
REVIEW	.	.		

SHEET 3A

N:\Projects\083-82734_WM-Orlando\Valencia - Exterior Header Construction\Active Drawings\08382734-M003.dwg | SHEET 3A | Modified: Monin 11/25/2015 12:29 PM | Plotted: Monin 11/25/2015 Jacksonville, FL

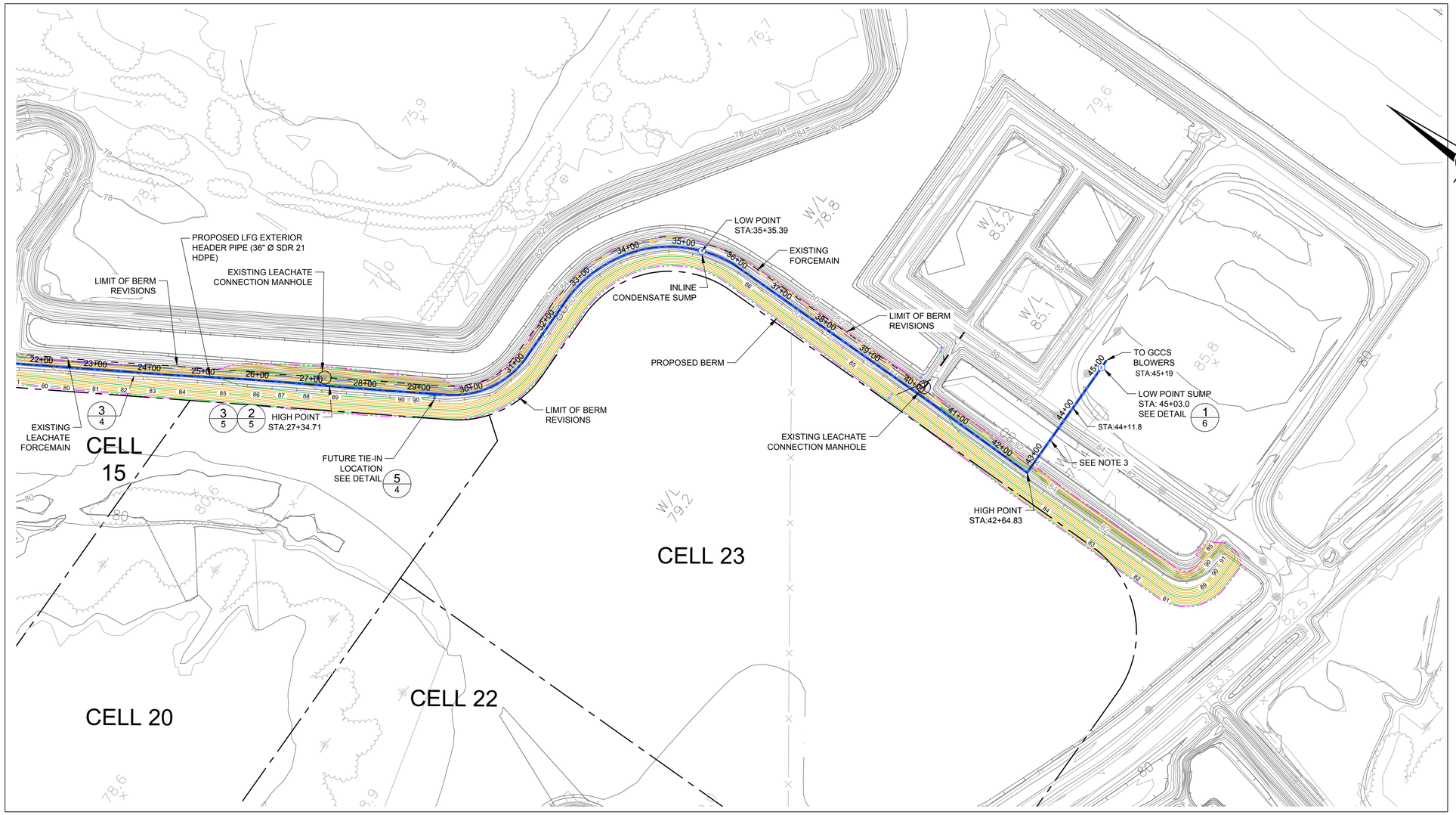

NOTES

1) CONDENSATE SUMPS WILL BE LOCATED AT ALL LOW POINTS. CLEANOUT/RISERS WILL BE LOCATED AT ALL HIGH POINTS ALONG LFGTE CONVEYANCE PIPE WITH SAMPLE PORTS.

2) EXISTING LANDFILL PERIMETER BERM TO BE MODIFIED IN SUPPORT OF PROPOSED PIPELINE. SEE DETAIL 5/5

3) POND CROSSING STRUCTURE TO BE COMPLETED BY OTHERS. PIPE TO BE INSTALLED UNRESTRAINED ON STRUCTURE.

REV	DATE	DES	REVISION DESCRIPTION	CADD	CHK	RVW
1						

PROJECT

J.E.D. SOLID WASTE MANAGEMENT FACILITY
ST. CLOUD, OSCEOLA COUNTY, FLORIDA

TITLE

REDLINE ASBUILT

PROPOSED PIPE LAYOUT PLAN (2 OF 2)

100 0 100 200
SCALE FEET

Golder Associates

PROJECT No.		083-82734.37	FILE No.	08382734-M003
DESIGN	DEG	11/21/14	SCALE	AS SHOWN
CADD	BCL	11/25/14		
CHECK	.	.		
REVIEW	.	.		

SHEET 3B

H:\PROJ\083\82734 WSI-Conn Waterski Sewer\Header Construction\Acad Drawings\082734-M003.dwg | SHEET 3B | WorkSet: Modern | 01/26/2015 12:58 PM | Plotted: Monon 01/28/15 | Jacksonville, FL

CONTROL POINT TABLE			
POINT NO.	NORTHING (FT)	EASTING (FT)	ELEVATION (FT.)
101	1353710.64	627092.09	85.38
102	1353686.29	627105.90	85.30
103	1353643.56	627131.51	85.43
104	1353605.50	627165.05	81.82
105	1353558.09	627183.38	85.32
106	1353516.32	627210.91	85.14
107	1353472.57	627235.36	85.31
108	1353429.42	627260.98	85.25
109	1353386.76	627286.71	85.19
110	1353344.08	627312.77	85.13
111	1353303.20	627340.56	84.98
112	1353261.60	627369.63	84.81
113	1353217.58	627392.97	85.14
114	1353180.35	627427.73	82.19
115	1353140.27	627459.23	80.53
116	1353099.46	627488.53	79.38
117	1353056.87	627514.83	79.40
118	1353013.96	627540.43	79.48
119	1352970.19	627564.63	79.67
120	1352925.92	627587.16	80.46
121	1352883.47	627613.56	80.02
122	1352837.61	627634.47	82.00
123	1352797.14	627654.92	85.48
124	1352772.06	627692.40	85.73
125	1352760.54	627735.88	85.67
126	1352757.46	627783.23	85.58
127	1352759.98	627833.40	85.37
128	1352760.42	627883.37	85.20
129	1352754.67	627936.76	85.26
130	1352737.62	627987.00	85.31
131	1352710.72	628033.43	85.33
132	1352674.37	628072.46	85.39
133	1352631.90	628104.46	85.50
134	1352581.60	628122.85	85.63
135	1352528.80	628134.49	85.60
136	1352478.52	628137.47	85.58
137	1352428.51	628137.91	85.60
138	1352378.50	628137.56	85.62
139	1352328.50	628137.12	85.59
140	1352278.50	628136.93	85.54
141	1352228.26	628136.86	85.55
142	1352178.50	628136.76	85.55
143	1352128.51	628138.69	85.60
144	1352103.23	628131.18	85.93
145	1352078.06	628136.19	86.07
146	1352028.12	628136.12	86.15
147	1351978.11	628136.14	86.15
148	1351928.25	628136.09	86.15
149	1351878.17	628135.93	86.13
150	1351849.26	628135.84	86.12
151	1351799.67	628133.11	86.04
152	1351749.67	628132.94	86.09
153	1351699.67	628132.83	86.13
154	1351649.67	628133.09	86.04
155	1351599.67	628133.20	86.01
156	1351549.67	628133.09	86.04
157	1351520.12	628137.81	85.69
158	1351507.33	628158.05	85.85
159	1351520.16	628202.46	81.16

CONTROL POINT TABLE			
POINT NO.	NORTHING (FT)	EASTING (FT)	ELEVATION (FT.)
201	1353709.01	627089.04	86.49
202	1353684.46	627102.60	86.56
203	1353641.44	627127.80	86.85
204	1353597.22	627151.54	87.10
205	1353554.67	627178.04	87.43
206	1353512.15	627204.15	87.72
207	1353468.37	627228.47	88.00
208	1353424.81	627253.03	88.30
209	1353381.43	627277.97	88.59
210	1353338.26	627303.11	88.89
211	1353296.05	627330.01	89.22
212	1353254.15	627357.44	89.56
213	1353210.23	627381.32	89.82
214	1353167.66	627407.57	90.13
215	1353125.01	627433.73	90.44
216	1353082.05	627459.19	90.75
217	1353039.07	627484.70	91.06
218	1352996.05	627510.20	91.19
219	1352953.03	627535.72	90.87
220	1352910.12	627561.32	90.55
221	1352867.44	627587.38	90.25
222	1352824.97	627613.96	89.95
223	1352787.87	627646.41	89.67
224	1352761.95	627687.61	89.40
225	1352750.25	627734.47	89.13
226	1352747.87	627783.45	88.77
227	1352750.52	627833.51	88.52
228	1352751.32	627883.54	88.22
229	1352746.79	627935.20	87.93
230	1352731.17	627984.45	87.62
231	1352705.88	628029.82	87.33
232	1352671.16	628068.86	87.00
233	1352629.81	628101.30	86.74
234	1352580.82	628120.04	86.60
235	1352528.43	628129.75	86.96
236	1352478.47	628130.95	87.32
237	1352428.42	628130.77	87.64
238	1352378.48	628129.39	87.96
239	1352328.44	628127.85	88.25
240	1352278.41	628127.09	88.59
241	1352228.51	628126.76	88.92
242	1352178.51	628125.68	89.24
243	1352128.46	628126.42	89.59
244	1352103.47	628120.08	89.63
245	1352078.36	628124.57	89.90
246	1352028.34	628123.87	90.23
247	1351978.38	628122.88	90.57
248	1351928.41	628121.81	90.91
249	1351878.43	628120.71	91.24
250	1351849.46	628121.54	91.36

CONTROL POINT TABLE			
POINT NO.	NORTHING (FT)	EASTING (FT)	ELEVATION (FT.)
301	1353702.65	627078.56	86.24
302	1353679.77	627094.88	86.38
303	1353637.11	627120.95	86.69
304	1353594.48	627147.08	87.00
305	1353551.86	627173.23	87.32
306	1353509.24	627199.38	87.63
307	1353466.40	627225.18	87.94
308	1353423.65	627251.10	88.25
309	1353380.84	627276.92	88.57
310	1353338.05	627302.78	88.88
311	1353295.26	627328.64	89.19
312	1353252.46	627354.50	89.50
313	1353210.04	627380.97	89.82
314	1353167.69	627407.55	90.13
315	1353125.07	627433.69	90.44
316	1353081.05	627457.47	90.71
317	1353039.06	627484.70	91.06
318	1352996.05	627510.20	91.19
319	1352953.05	627535.70	90.87
320	1352910.10	627561.30	90.56
321	1352867.44	627587.39	90.25
322	1352824.79	627613.47	89.94
323	1352785.85	627644.52	89.62
324	1352758.05	627685.85	89.31
325	1352743.95	627733.82	89.00
326	1352742.68	627783.54	88.69
327	1352743.10	627833.54	88.38
328	1352743.52	627883.54	88.06
329	1352737.19	627932.97	87.73
330	1352722.49	627980.59	87.44
331	1352697.74	628023.94	87.13
332	1352664.24	628060.89	86.81
333	1352623.42	628089.60	86.50
334	1352577.46	628109.05	86.38
335	1352528.42	628118.11	86.72
336	1352478.42	628118.33	87.07
337	1352428.42	628118.55	87.41
338	1352378.42	628118.77	87.75
339	1352328.42	628118.99	88.09
340	1352278.42	628119.22	88.44
341	1352228.42	628119.44	88.78
342	1352178.42	628119.66	89.12
343	1352128.42	628119.88	89.47
344	1352103.42	628119.99	89.64
345	1352078.42	628119.75	89.81
346	1352028.43	628119.23	90.15
347	1351978.43	628118.71	90.49
348	1351928.43	628118.20	90.84
349	1351878.43	628117.68	91.18
350	1351849.52	628117.38	91.28
351	1351799.67	628117.38	91.28
352	1351749.67	628117.38	91.28
353	1351699.67	628117.38	91.28
354	1351649.67	628117.38	91.28
355	1351599.67	628117.38	91.28
356	1351549.67	628117.38	91.28
357	1351509.62	628124.63	91.28
358	1351491.03	628157.74	91.28
359	1351489.77	628202.51	91.27

CONTROL POINT TABLE			
POINT NO.	NORTHING (FT)	EASTING (FT)	ELEVATION (FT.)
401	1353696.40	627068.32	86.00
402	1353672.48	627082.94	86.10
403	1353629.81	627109.01	86.41
404	1353587.15	627135.15	86.72
405	1353544.54	627161.29	87.04
406	1353501.60	627187.64	87.35
407	1353459.19	627213.22	87.66
408	1353416.39	627239.08	87.97
409	1353373.60	627264.94	88.29
410	1353330.81	627290.80	88.60
411	1353288.02	627316.66	88.91
412	1353245.22	627342.52	89.22
413	1353202.60	627369.11	89.54
414	1353160.25	627395.69	89.85
415	1353117.93	627421.65	90.16
416	1353074.93	627447.15	90.47
417	1353031.92	627472.65	90.78
418	1352988.91	627498.16	90.91
419	1352945.91	627523.66	90.59
420	1352902.79	627549.36	90.28
421	1352860.14	627575.44	89.97
422	1352817.48	627601.53	89.66
423	1352775.55	627635.04	89.34
424	1352745.39	627679.89	89.03
425	1352730.06	627731.72	88.72
426	1352728.68	627783.66	88.41
427	1352729.10	627833.66	88.10
428	1352729.52	627883.66	87.78
429	1352724.29	627930.18	87.47
430	1352709.69	627974.92	87.16
431	1352686.34	628015.79	86.85
432	1352655.10	628050.46	86.53
433	1352616.70	628077.50	86.22
434	1352573.40	628095.65	86.10
435	1352528.36	628104.11	86.44
436	1352478.36	628104.33	86.79
437	1352428.36	628104.55	87.13
438	1352378.36	628104.77	87.47
439	1352328.36	628104.99	87.81
440	1352278.36	628105.22	88.16
441	1352228.36	628105.44	88.50
442	1352178.36	628105.66	88.84
443	1352128.36	628105.88	89.19
444	1352103.53	628105.81	89.30
445	1352078.57	628105.75	89.53
446	1352028.57	628105.23	89.87
447	1351978.57	628104.72	90.21
448	1351928.58	628104.20	90.56
449	1351878.58	628103.68	90.90
450	1351849.67	628103.38	91.00
451	1351799.67	628103.38	91.00
452	1351749.67	628103.38	91.00
453	1351699.67	628103.38	91.00
454	1351649.67	628103.38	91.00
455	1351599.67	628103.38	91.00
456	1351549.67	628103.38	91.00
457	1351501.65	628113.11	91.00
458	1351477.12	628157.48	91.00
459	1351475.78	628202.03	90.99

CONTROL POINT TABLE			
POINT NO.	NORTHING (FT)	EASTING (FT)	ELEVATION (FT.)
501	1353685.51	627050.51	79.04
502	1353662.52	627066.65	79.74
503	1353619.45	627092.05	79.79
504	1353575.18	627115.63	79.09
505	1353532.11	627141.04	79.12
506	1353489.01	627166.40	79.12
507	1353445.93	627191.29	79.12
508	1353402.67	627216.38	79.13
509	1353359.40	627241.44	79.13
510	1353316.12	627266.50	79.13
511	1353272.83	627291.54	79.12
512	1353229.53	627316.56	79.11
513	1353185.96	627342.60	79.10
514	1353143.11	627368.39	79.10
515	1353101.01	627393.12	79.10
516	1353057.53	627417.82	79.10
517	1353014.04	627442.51	79.10
518	1352970.85	627467.70	79.10
519	1352928.32	627494.01	79.10
520	1352885.32	627520.79	79.12
521	1352843.17	627547.70	79.13
522	1352801.00	627574.57	79.13
523	1352753.01	627614.28	79.13
524	1352718.53	627667.20	79.13
525	1352701.52	627727.84	79.12
526	1352700.80	627783.89	79.12
527	1352702.16	627833.89	79.12
528	1352703.52	627883.88	79.12
529	1352699.80	627924.87	79.12
530	1352687.64	627965.15	79.12
531	1352667.49	628002.31	79.12
532	1352640.44	628033.72	79.12
533	1352606.36	628058.87	79.12
534	1352567.33	628075.60	79.12
535	1352528.26	628082.13	79.11
536	1352478.25	628081.22	79.08
537	1352428.25	628080.42	79.08
538	1352378.25	628079.61	79.08
539	1352328.24	628078.80	79.08
540	1352278.24	628078.02	79.09
541	1352228.23	628077.21	79.09
542	1352178.23	628076.57	79.15
543	1352128.23	628076.12	79.27
544	1352103.35	628075.60	89.36
545	1352078.89	628075.10	79.31
546	1352028.90	628073.52	79.30
547	1351978.91	628072.00	79.31
548	1351928.93	628070.42	79.30
549	1351878.94	628068.88	79.30
550	1351850.03	628068.25	79.29
551	1351799.67	628068.25	79.29
552	1351749.67	628068.24	79.29
553	1351699.67	628068.22	79.28
554	1351649.67	628068.17	79.26
555	1351599.67	628068.17	79.26
556	1351549.67	628068.16	79.26
557	1351478.90	628086.06	79.25
558	1351441.78	628156.82	79.25
559	1351440.59	628201.78	79.25

80 0 80 160
SCALE FEET

REV	DATE	DES	REVISION DESCRIPTION	CADD	CHK	RVW
0						

PROJECT
J.E.D. SOLID WASTE MANAGEMENT FACILITY
ST. CLOUD, OSCEOLA COUNTY, FLORIDA

TITLE
REDLINE ASBUILT
PROPOSED BERM CONTROL POINTS

Golder Associates

PROJECT No.		083-82734.37	FILE No. 08382734-M005
DESIGN	DEG	11/21/14	SCALE AS SHOWN
CADD	BCL	11/25/14	**SHEET 3C**
CHECK	.	.	
REVIEW	.	.	

N:\File\2008\083-82734 WSI -Omni Waste\M - Exterior Header Construction\Active Drawings\08382734-M005.dwg | SHEET 3C | Modified: blucero 01/16/2015 10:44 AM | Plotted: blucero 01/28/15| Jacksonville, FL

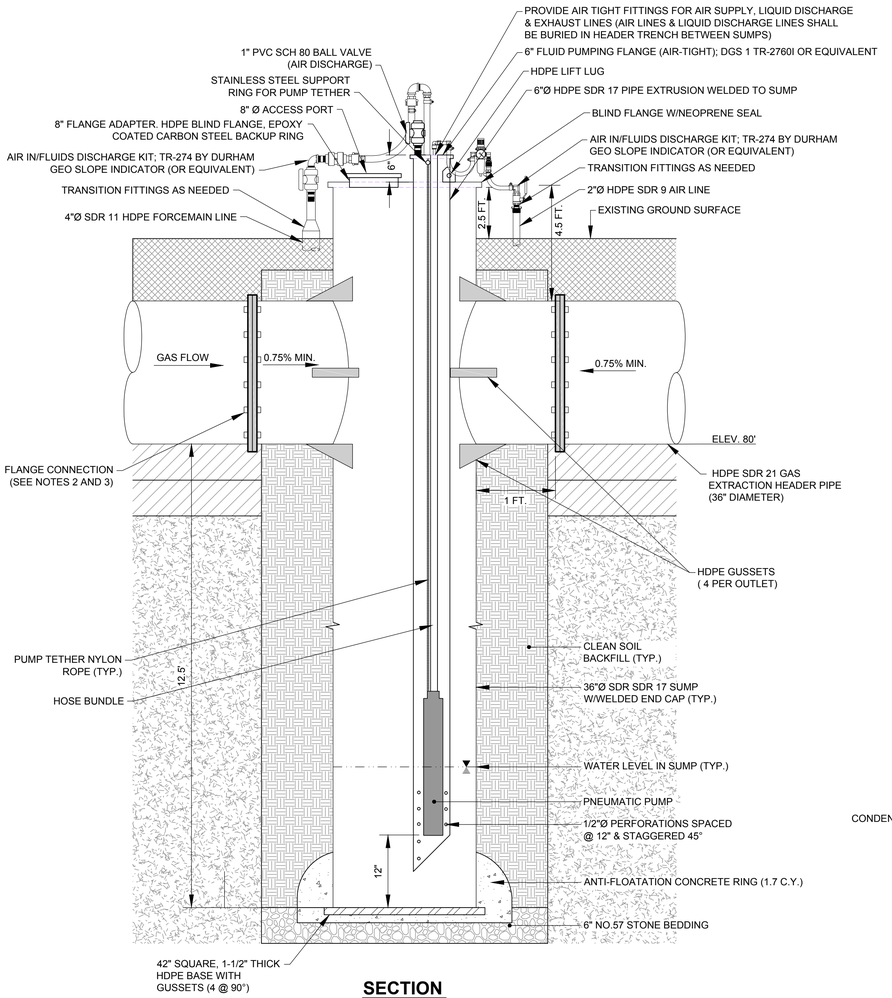

SECTION

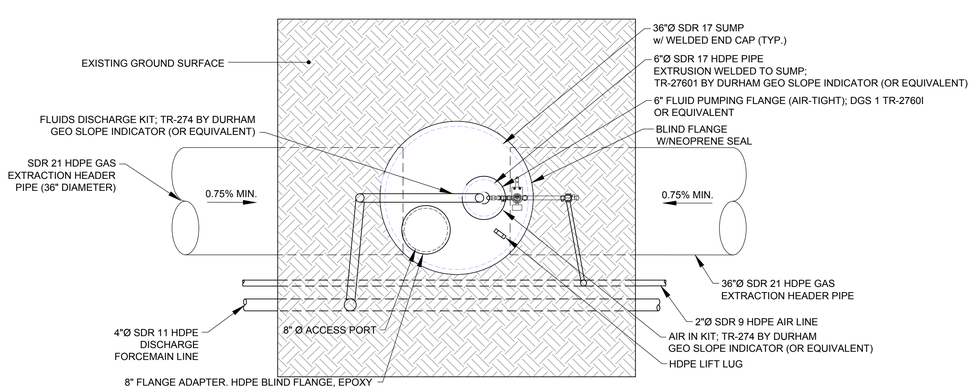

PLAN

1/4 INLINE CONDENSATE SUMP DETAIL

NTS

NOTE: TERMINATE 2"Ø AIR LINE AND 4"Ø FORCEMAIN WITH BUTT CAPS AT STA. 19+24 (APPROXIMATELY 10 FEET FROM SUMP).

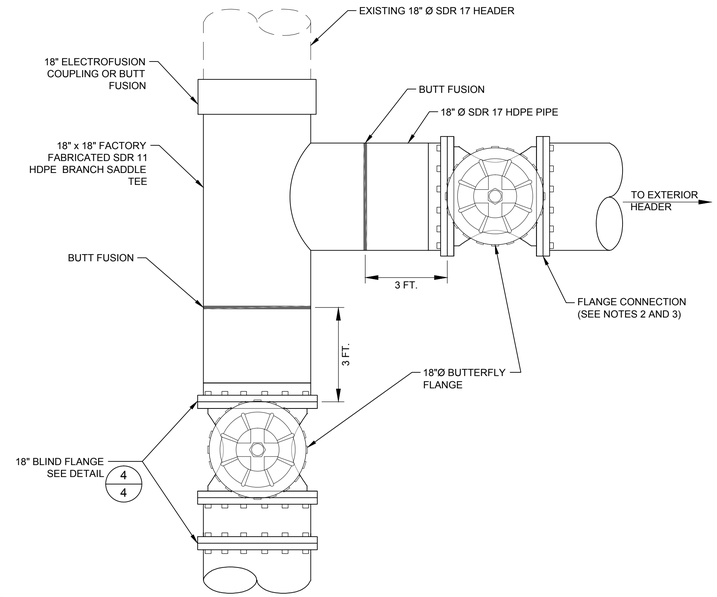

2/4 TIE-IN TO EXISTING 18" HEADER PIPE

NTS

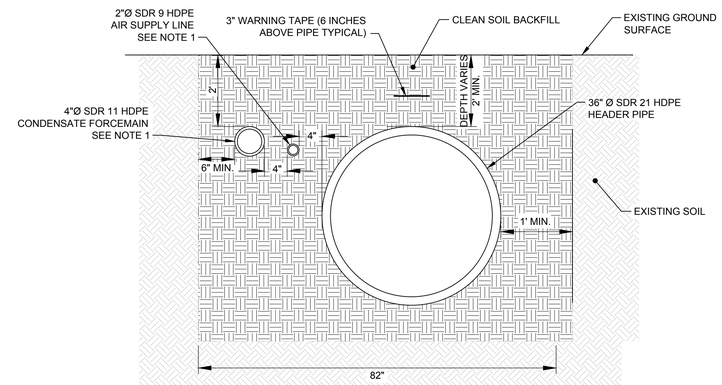

3/4 PIPE TRENCH DETAIL

NTS

NOTE: AIR SUPPLY AND FORCEMAIN PIPE SHALL BE INSTALLED ON SAME SIDE OF HEADER PIPE.

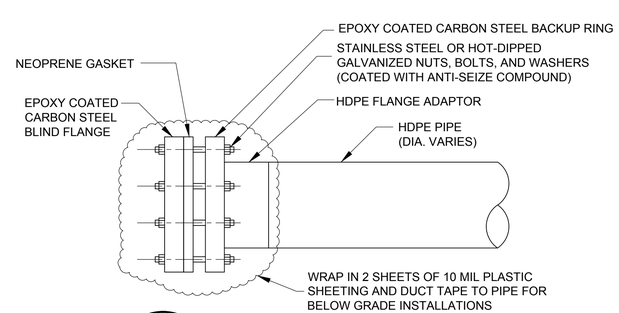

4/4 BLIND FLANGE DETAIL

NTS

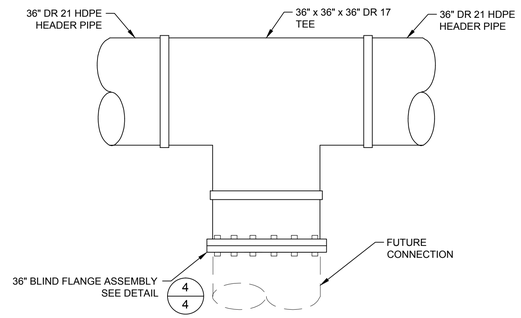

5/4 36" HDPE DR 17 TEE

NTS

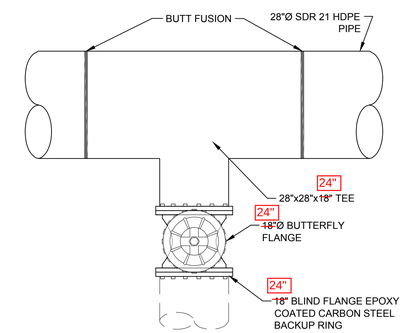

6/4 28" FUTURE TIE-IN DETAIL

NTS

NOTES

1. AIR LINE AND CONDENSATE FORCEMAIN TO BE INSTALLED NO DEEPER THAN 2 FT. B.G.S. IN HEADER TRENCH.
2. ALL BELOW GROUND FLANGE CONNECTIONS TO BE WRAPPED IN 2 SHEETS OF 10-MIL PLASTIC SHEETING AND DUCT TAPED TO PIPE.
3. FLANGE CONNECTIONS TO BE WITH EPOXY COATED CARBON STEEL BACKUP RING AND STAINLESS STEEL OR HOT DIPPED GALVANIZED STEEL NUTS, BOLTS, AND WASHERS. ALL THREADS TO BE COATED WITH ANTI-SEIZE COMPOUND.

REV	DATE	DES	REVISION DESCRIPTION	CADD	CHK	RVW
0						

PROJECT

J.E.D. SOLID WASTE MANAGEMENT FACILITY
ST. CLOUD, OSCEOLA COUNTY, FLORIDA

TITLE

REDLINE ASBUILT

GCCS DETAILS (1 OF 3)

Golder Associates

PROJECT No.		083-82734.37	FILE No.	08382734-M004
DESIGN	DEG	11/21/14	SCALE	AS SHOWN
CADD	BCL	11/25/14		
CHECK	.	.	**SHEET 4**	
REVIEW	.	.		

N:\Projects\083-82734 WS Omni Wastel\1. Exelsior Hauler Construction\Acme Drawings\083827341M004.dwg, SHEET 4 | Modified: kbaxter 01/16/2015 3:41 PM | Plotted: kbaxter 01/16/2015 Jacksonville, FL

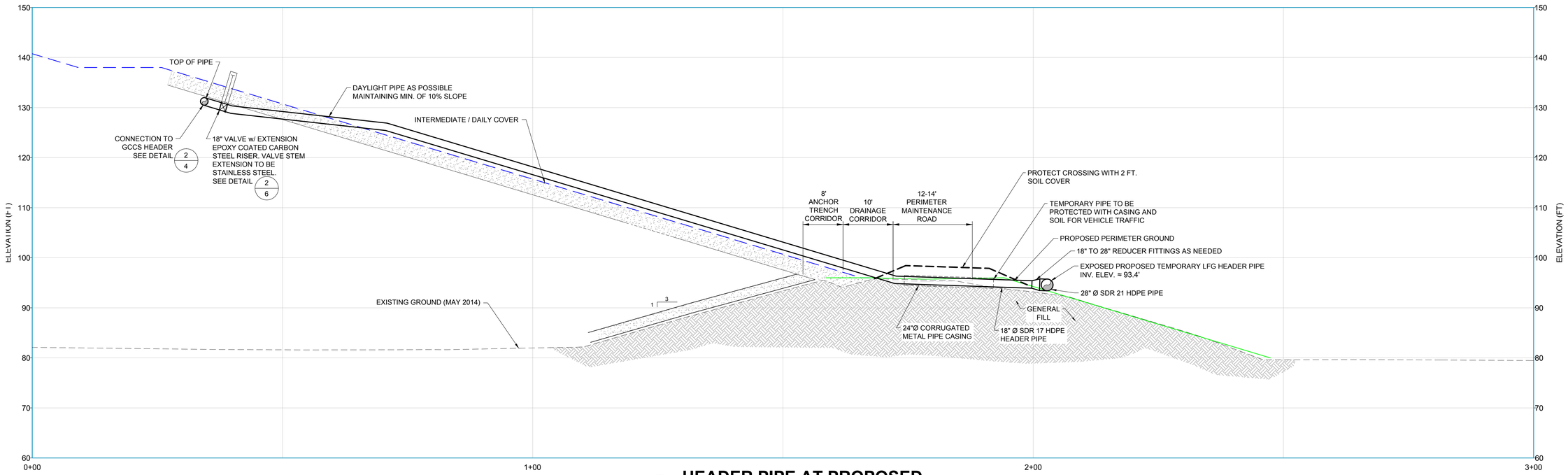

1/5 HEADER PIPE AT PROPOSED PIPE CONNECTION

SCALE 10 0 10 20 FEET

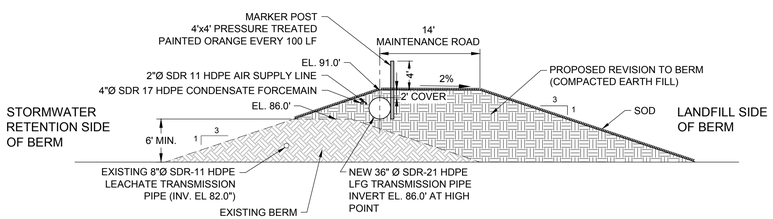

HIGH POINT

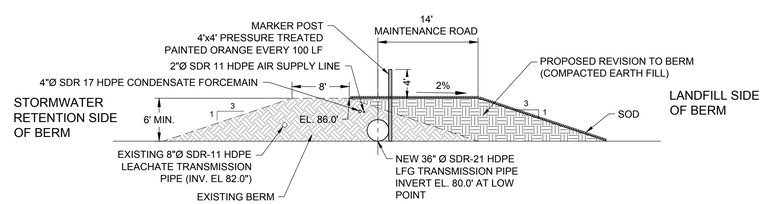

LOW POINT

2/5 CROSS SECTIONS AT HIGH POINT & LOW POINT

SCALE 10 0 10 20 FEET

NOTE: AIR-SUPPLY AND FORCEMAIN LINES ARE NOT SHOWN FOR CLARITY.

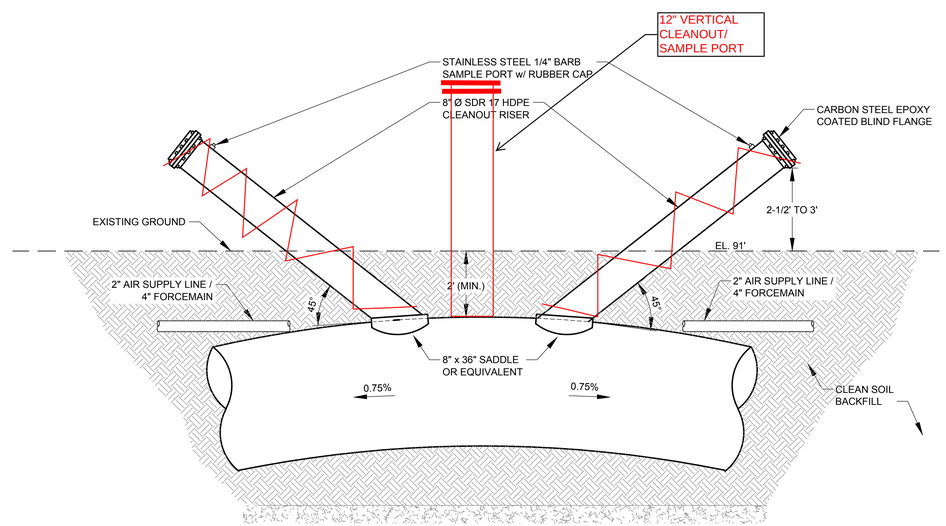

3/5 CLEANOUTS AND SAMPLE PORTS AT HIGH POINT

NTS

REV	DATE	DES	REVISION DESCRIPTION	CADD	CHK	RVW
0						

PROJECT
J.E.D. SOLID WASTE MANAGEMENT FACILITY
ST. CLOUD, OSCEOLA COUNTY, FLORIDA

TITLE
REDLINE ASBUILT
GCCS DETAILS (2 OF 3)

Golder Associates

PROJECT No.		083-82734.37	FILE No.	08382734-M004
DESIGN	DEG	11/21/14	SCALE	AS SHOWN
CADD	BCL	11/25/14		
CHECK	.	.	SHEET 5	
REVIEW	.	.		

N:\FINDS\083\82734 HSC Gen Waste\04 Eastern Header Construction\Acad Drawings\082734-M004.dwg SHEET 5 | Modified: bcarr 01/16/2015 5:41 PM | Plotted: bcarr 01/16/15 Jacksonville, FL

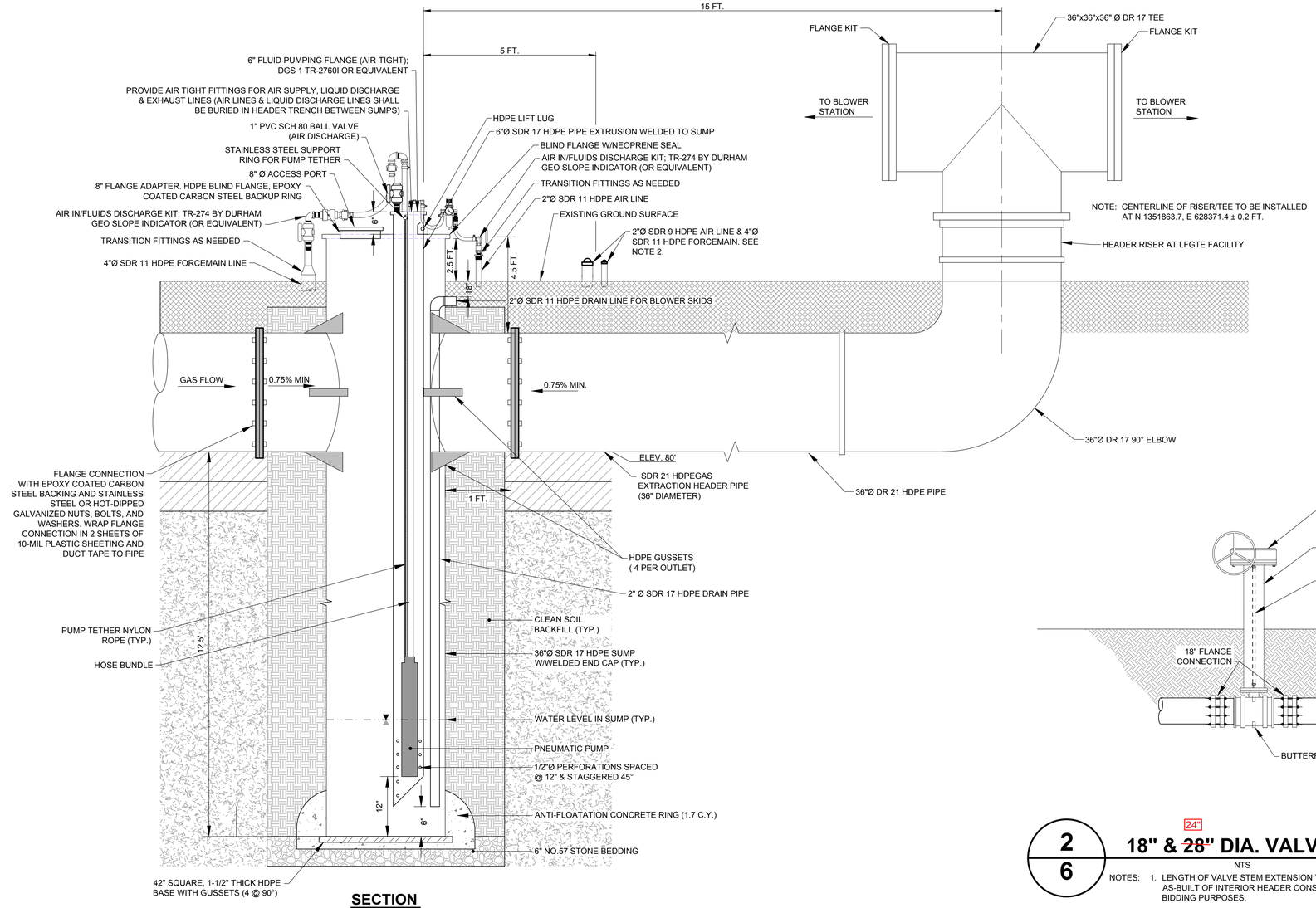

SECTION

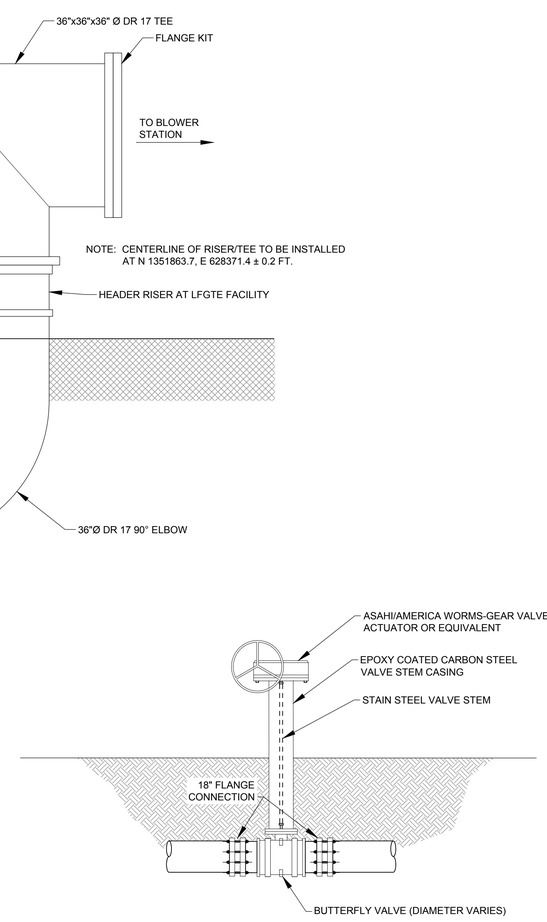

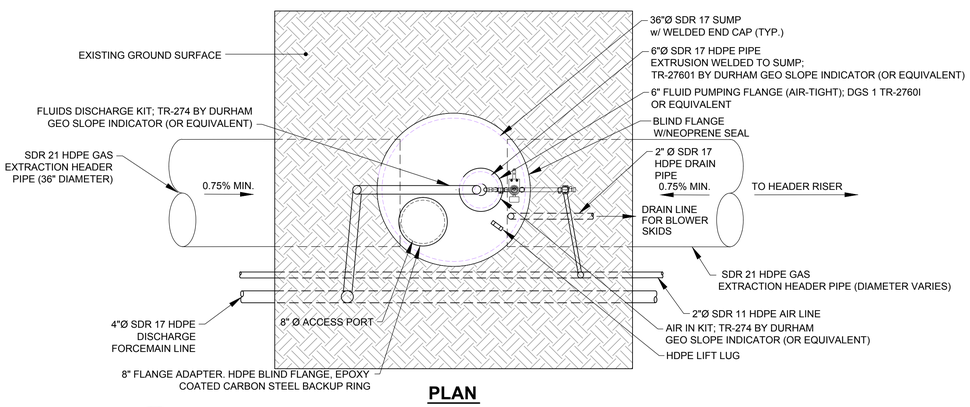

PLAN

1/6 INLINE CONDENSATE SUMP AT LFGTE FACILITY DETAIL

NTS

NOTE: CENTERLINE OF SUMP TO BE INSTALLED ___ FT. FROM CENTERLINE OF HEADER RISER

2/6 18" & ~~28~~ 24" DIA. VALVE DETAIL

NTS

NOTES:
1. LENGTH OF VALVE STEM EXTENSION TO BE DETERMINED FROM AS-BUILT OF INTERIOR HEADER CONSTRUCTION. ASSUME 5 FEET FOR BIDDING PURPOSES.
2. 18" VALVES TO BE INSTALLED WITHIN 3 FEET OF 18" x 18" X 18" TEE.

NOTES

1. ALL BELOW GROUND FLANGE CONNECTIONS TO BE WRAPPED IN 2 SHEETS OF 10-MIL PLASTIC SHEETING AND DUCT TAPED TO PIPE.
2. 2" AIRLINE AND 4" FORCEMAIN TO BE TERMINATED 2 FEET ABOVE GROUND WITH BUTT CAPS.

REV	DATE	DES	REVISION DESCRIPTION	CADD	CHK	RVW
0						

PROJECT
J.E.D. SOLID WASTE MANAGEMENT FACILITY
ST. CLOUD, OSCEOLA COUNTY, FLORIDA

TITLE
REDLINE ASBUILT
GCCS DETAILS (3 OF 3)

Golder Associates

PROJECT No.		083-82734.37	FILE No.	08382734-M004
DESIGN	DEG	11/21/14	SCALE	AS SHOWN
CADD	BCL	11/25/14		
CHECK	.	.	SHEET 6	
REVIEW	.	.		

N:\Naples\083\82734 VES Omni Waste\4. Exelsior Header Construction\Acme Drawings\083827341M004.dwg, SHEET 6 | Modified: 6/10/2015 3:41 PM | Plotted: 6/10/2015 | Jacksonville, FL