1430296 (1)

HARDEE COUNTY LANDFILL EXPANSION
CONSTRUCTION DRAWINGS
PHASE II SECTION I

PREPARED FOR

BOARD OF COUNTY COMMISSIONERS
HARDEE COUNTY, FLORIDA

MARCH 2006

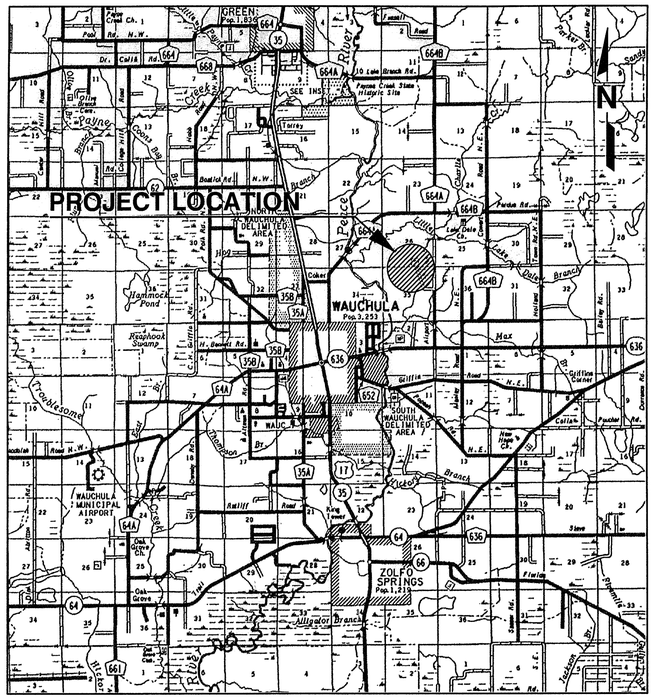

LOCATION MAP
NOT TO SCALE

DRAWING INDEX

DRAWING NO.		DRAWING TITLE
1	-	COVER SHEET
2	-	FACILITY LAYOUT
3	-	EXISTING CONDITIONS - NORTH
4	-	EXISTING CONDITIONS - SOUTH
5	-	PHASE II - GROUNDWATER CONTROL SYSTEM PLAN
6	-	PHASE II - STORMWATER MANAGEMENT IMPROVEMENTS
7	-	PHASE II - SECTION I TOP OF GEOMEMBRANE PLAN
8	-	PHASE II - SECTION I SITE PLAN
9	-	EROSION AND SEDIMENTATION CONTROL PLAN
10	-	DETAILS - 1
11	-	DETAILS - 2
12	-	DETAILS - 3
13	-	DETAILS - 4
14	-	DETAILS - 5
15	-	DETAILS - 6
16	-	DETAILS - 7

Dept. of Environmental Protection
AUG 09 2006
Southwest District

SCS ENGINEERS
STEARNS, CONRAD AND SCHMIDT
CONSULTING ENGINEERS
3012 U.S. HWY. 301 N. SUITE 700
TAMPA, FLORIDA 33619
PH (813) 621-0080 FAX NO. (813) 623-6757
WWW.SCSENGINEERS.COM
FLORIDA CERTIFICATE OF AUTHORIZATION No. 00004892

CONFORMED DRAWINGS
DATE: 8/9/2006

SHANE R. FISCHER, P.E.
FL P.E. No. 50026

These dwg not Approved FILE

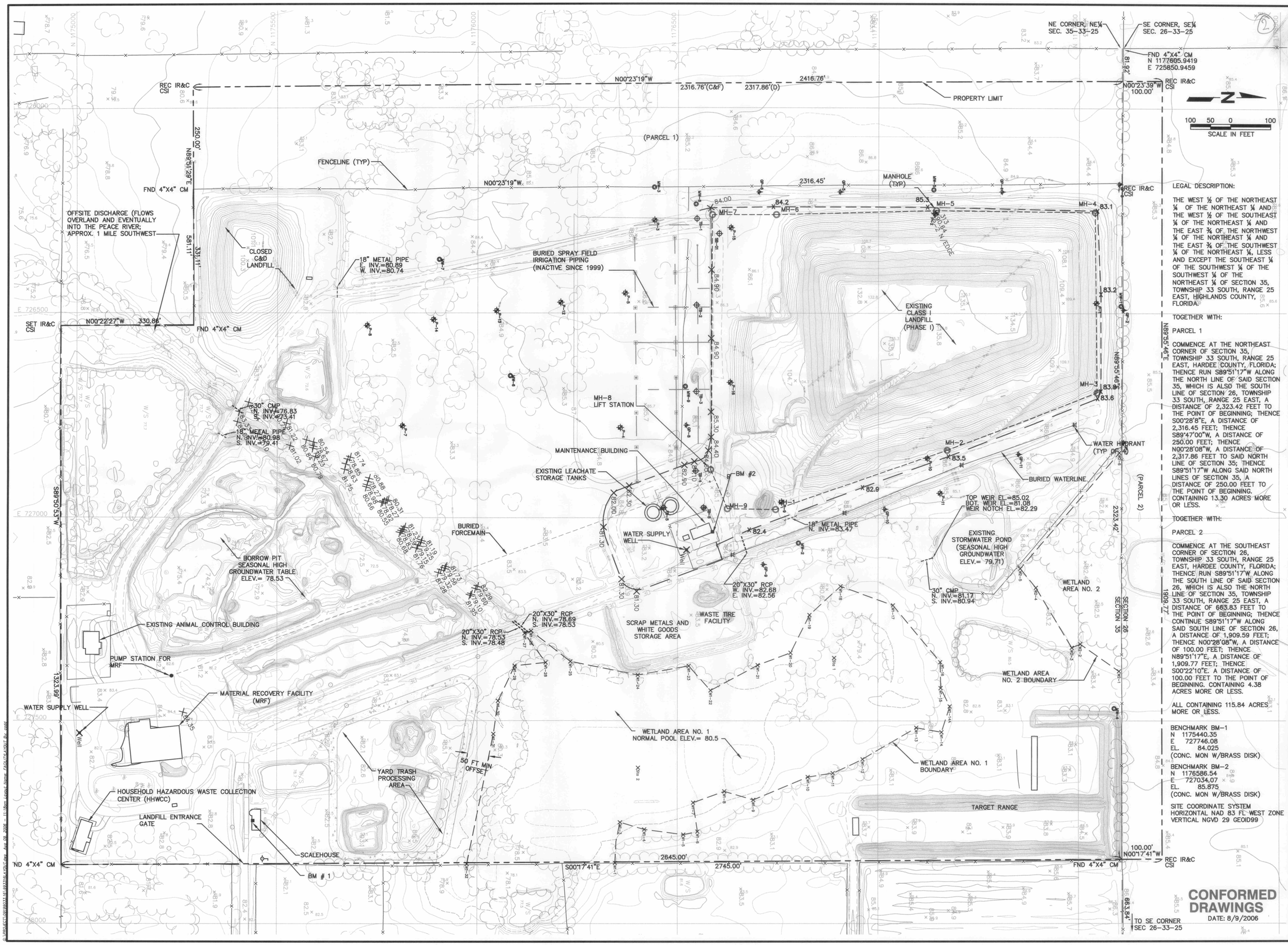

LEGAL DESCRIPTION:

THE WEST ½ OF THE NORTHEAST ¼ OF THE NORTHEAST ¼ AND THE WEST ½ OF THE SOUTHEAST ¼ OF THE NORTHEAST ¼ AND THE EAST ¾ OF THE NORTHWEST ¼ OF THE NORTHEAST ¼ AND THE EAST ¾ OF THE SOUTHWEST ¼ OF THE NORTHEAST ¼, LESS AND EXCEPT THE SOUTHEAST ¼ OF THE SOUTHWEST ¼ OF THE SOUTHWEST ¼ OF THE NORTHEAST ¼ OF SECTION 35, TOWNSHIP 33 SOUTH, RANGE 25 EAST, HIGHLANDS COUNTY, FLORIDA.

TOGETHER WITH:

PARCEL 1

COMMENCE AT THE NORTHEAST CORNER OF SECTION 35, TOWNSHIP 33 SOUTH, RANGE 25 EAST, HARDEE COUNTY, FLORIDA; THENCE RUN S89°51'17"W ALONG THE NORTH LINE OF SAID SECTION 35, WHICH IS ALSO THE SOUTH LINE OF SECTION 26, TOWNSHIP 33 SOUTH, RANGE 25 EAST, A DISTANCE OF 2,323.42 FEET TO THE POINT OF BEGINNING; THENCE S00°28'8"E, A DISTANCE OF 2,316.45 FEET; THENCE S89°47'00"W, A DISTANCE OF 250.00 FEET; THENCE N00°28'08"W, A DISTANCE OF 2,317.86 FEET TO SAID NORTH LINE OF SECTION 35; THENCE S89°51'17"W ALONG SAID NORTH LINES OF SECTION 35, A DISTANCE OF 250.00 FEET TO THE POINT OF BEGINNING. CONTAINING 13.30 ACRES MORE OR LESS.

TOGETHER WITH:

PARCEL 2

COMMENCE AT THE SOUTHEAST CORNER OF SECTION 26, TOWNSHIP 33 SOUTH, RANGE 25 EAST, HARDEE COUNTY, FLORIDA; THENCE RUN S89°51'17"W ALONG THE SOUTH LINE OF SAID SECTION 26, WHICH IS ALSO THE NORTH LINE OF SECTION 35, TOWNSHIP 33 SOUTH, RANGE 25 EAST, A DISTANCE OF 663.83 FEET TO THE POINT OF BEGINNING; THENCE CONTINUE S89°51'17"W ALONG SAID SOUTH LINE OF SECTION 26, A DISTANCE OF 1,909.59 FEET; THENCE N00°28'08"W, A DISTANCE OF 100.00 FEET; THENCE N89°51'17"E, A DISTANCE OF 1,909.77 FEET; THENCE S00°22'10"E. A DISTANCE OF 100.00 FEET TO THE POINT OF BEGINNING. CONTAINING 4.38 ACRES MORE OR LESS.

ALL CONTAINING 115.84 ACRES MORE OR LESS.

BENCHMARK BM-1
N 1175440.35
E 727746.08
EL. 84.025
(CONC. MON W/BRASS DISK)

BENCHMARK BM-2
N 1176586.54
E 727034.07
EL. 85.875
(CONC. MON W/BRASS DISK)

SITE COORDINATE SYSTEM
HORIZONTAL NAD 83 FL WEST ZONE
VERTICAL NGVD 29 GEOID99

CONFORMED DRAWINGS
DATE: 8/9/2006

REV	DATE	DESCRIPTION	BY
1	3/6/06	ISSUED FOR BIDS	
2	8/9/06	CONFORMED DRAWINGS	
3			
4			
5			

STATE OF FLORIDA GARY R. PROCTOR No. 53637 PROFESSIONAL ENGINEER
SCHWIMMER, INC. CERTIFICATE NO. 5808

DRAWING TITLE: **FACILITY LAYOUT**

PROJECT TITLE: **HARDEE COUNTY LANDFILL EXPANSION CONSTRUCTION DRAWINGS**

CLIENT: **HARDEE COUNTY BOARD OF COUNTY COMMISSIONERS**

FLORIDA DEPARTMENT OF ENVIRONMENTAL PROTECTION
AUG - 9 2006
SOUTHWEST DISTRICT TAMPA

SCS ENGINEERS
STEARNS, CONRAD AND SCHMIDT CONSULTING ENGINEERS, INC.
3920 SW 47th AVENUE, SUITE 100, TAMPA, FL 33619
PH (813) 621-0080 FAX NO. (813) 622-4707
FLORIDA CERTIFICATE OF AUTHORIZATION NO. 00004892

PROJ. NO.	DWN. BY:	Q/A REVIEW BY:
09199033.16	BLJ	SRN/LEK
DSN. BY:	CHK. BY:	APP. BY:
JHO/LEK	SRN/LEK	CEH

CADD FILE: 993316LAYOUT

DATE: MARCH 2006

SCALE: AS SHOWN

DRAWING NO. **2** of 16

EXISTING LAND USE

DESCRIPTION	ACREAGE (AC)	PERCENT OF TOTAL PROJECT	FLUCCS CODE	NWI CODE	FLUCCS DESCRIPTION	NWI DESCRIPTION
IMPERVIOUS	5.8	5.0 %	814	--	ROAD/HIGHWAY	--
PERVIOUS	16.0	13.8 %	835	--	SOLID WASTE	--
STORMWATER MANAGEMENT	20.0	17.2 %	510	--	STREAM/ WATERWAY	--
GRASSED AREA	62.6	54.0 %	212	--	UNIMPROVED PASTURE	--
WETLAND AREA NO. 1	10.2	8.8 %	610	PF01	WETLAND HARDWOOD	PALUSTRINE FORESTED
WETLAND AREA NO. 2	1.7	1.4 %	617	PSS1	MIXED WETLAND HARDWOOD	PALUSTRINE SCRUB-SCRUB BROAD LEAF DECIDUOUS
TOTAL	116.0	100.0 %				

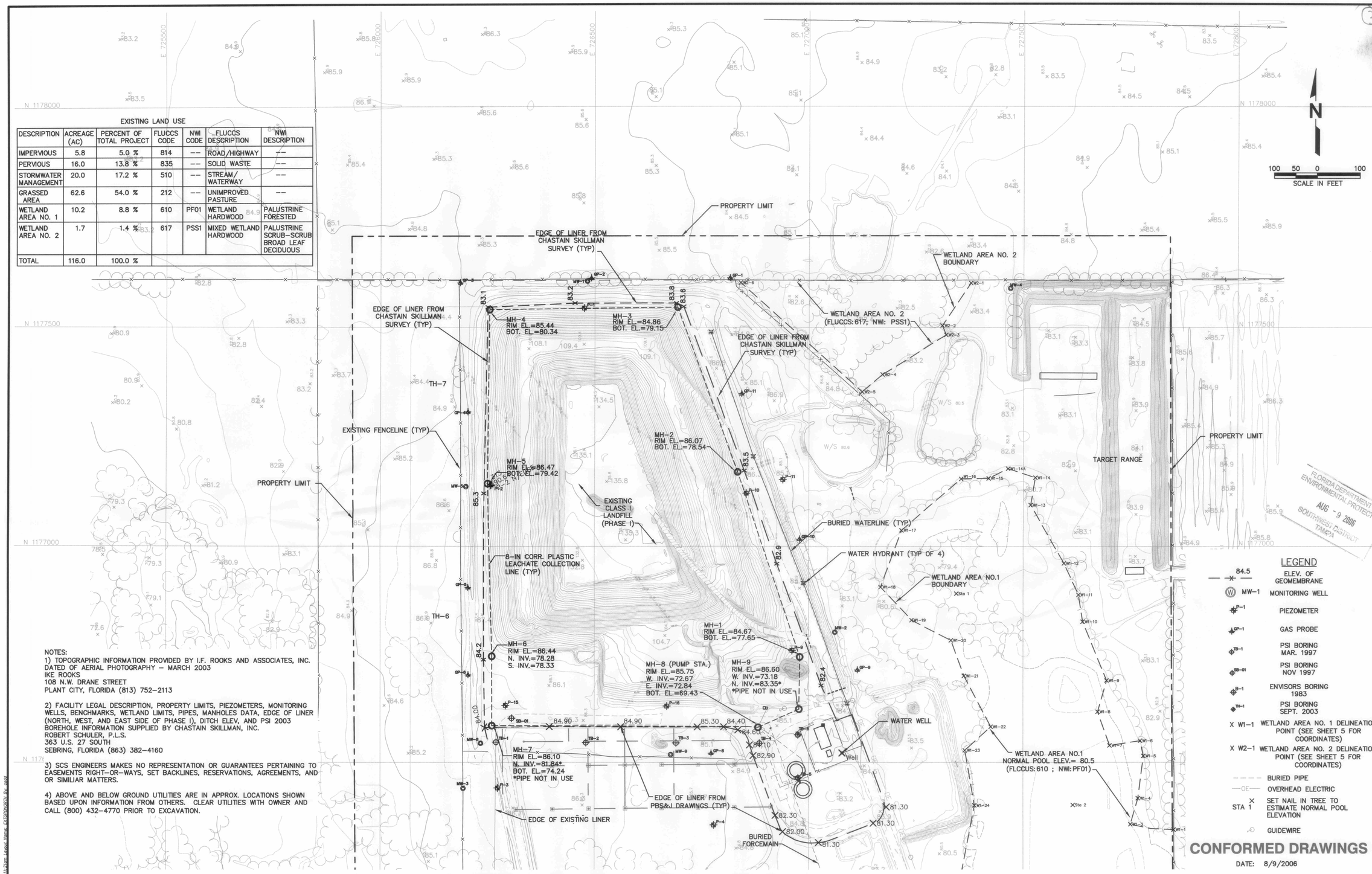

NOTES:

1) TOPOGRAPHIC INFORMATION PROVIDED BY I.F. ROOKS AND ASSOCIATES, INC. DATED OF AERIAL PHOTOGRAPHY – MARCH 2003
IKE ROOKS
108 N.W. DRANE STREET
PLANT CITY, FLORIDA (813) 752-2113

2) FACILITY LEGAL DESCRIPTION, PROPERTY LIMITS, PIEZOMETERS, MONITORING WELLS, BENCHMARKS, WETLAND LIMITS, PIPES, MANHOLES DATA, EDGE OF LINER (NORTH, WEST, AND EAST SIDE OF PHASE I), DITCH ELEV, AND PSI 2003 BOREHOLE INFORMATION SUPPLIED BY CHASTAIN SKILLMAN, INC.
ROBERT SCHULER, P.L.S.
363 U.S. 27 SOUTH
SEBRING, FLORIDA (863) 382-4160

3) SCS ENGINEERS MAKES NO REPRESENTATION OR GUARANTEES PERTAINING TO EASEMENTS RIGHT-OR-WAYS, SET BACKLINES, RESERVATIONS, AGREEMENTS, AND OR SIMILIAR MATTERS.

4) ABOVE AND BELOW GROUND UTILITIES ARE IN APPROX. LOCATIONS SHOWN BASED UPON INFORMATION FROM OTHERS. CLEAR UTILITIES WITH OWNER AND CALL (800) 432-4770 PRIOR TO EXCAVATION.

LEGEND

84.5 — ELEV. OF GEOMEMBRANE
MW-1 — MONITORING WELL
P-1 — PIEZOMETER
GP-1 — GAS PROBE
TB-1 — PSI BORING MAR. 1997
SB-01 — PSI BORING NOV 1997
E-1 — ENVISORS BORING 1983
TN-1 — PSI BORING SEPT. 2003
X W1-1 — WETLAND AREA NO. 1 DELINEATION POINT (SEE SHEET 5 FOR COORDINATES)
X W2-1 — WETLAND AREA NO. 2 DELINEATION POINT (SEE SHEET 5 FOR COORDINATES)
BURIED PIPE
OE — OVERHEAD ELECTRIC
X STA 1 — SET NAIL IN TREE TO ESTIMATE NORMAL POOL ELEVATION
GUIDEWIRE

CONFORMED DRAWINGS

DATE: 8/9/2006

LEGEND

PAVED ROAD
CURB-GUTTER
DIRT ROAD
TRAIL
DRIVEWAYS
PARK-LOTS
SIDEWALKS
RUNWAYS
RR SINGLE
RR DOUBLE
WALLS
DRAINAGE

GUARDRAIL
RETAINING WALL
FENCES
PIPELINES
LAKE
RIVER
STREAM
TREE LINE
BRUSH LINE
HEDGE
GROVE

INDEX CONTOUR
OBSCURED INDEX
DEPRESSED INDEX
OBSCURED DEP INDEX
INTERMEDIATE CONTOUR
OBSCURED INTERMEDIATE
DEPRESSED INTERMEDIATE
OBSCURED DEP INTERMEDIATE
STRUCTURES

BUILDINGS

OUTLINE

SPOT HEIGHT 143.7
OBSCURED SPOT HEIGHT 157.8
CONTROL POINT AT16 N: 1515899.0000 E: 520734.6370 EL: 79.7970
WATER SURFACE ELEV. W/S 163.2
SWAMP
EDGE OF PAVEMENT EP
BUMPER
RAILROAD SIGNAL
RAILROAD SWITCH
RAILROAD CROSSING GATE

STREET LIGHT
TRAFFIC LIGHT
TOWER
UTILITY POLES
VALVE
FIRE HYDRANT
ELECTRICAL BOX
CATCH BASIN
DROP INLET
MANHOLE
MAILBOX
MISC. POST

SIGN
DOUBLE LEGGED SIGN
TELEPHONE BOOTH
ANTENNA
SATELLITE DISH
BIRD BATH
FLAG POLE
SHRUB
SINGLE TREE
PALM TREE
EVERGREEN TREE

I, THE UNDERSIGNED REGISTERED SURVEYOR & MAPPER CERTIFY THAT THIS MAP WAS COMPILED USING PHOTOGRAMMETRIC METHODS UNDER MY SUPERVISION AND THAT THE DATA SHOWN IS TRUE AND CORRECT TO THE BEST OF MY KNOWLEDGE AND BELIEF.

THIS SURVEY MEETS THE MINIMUM TECHNICAL STANDARDS. FLORIDA CHAPTER 61G17-6(FLORIDA ADMINISTRATIVE CODE).

DATE OF PHOTOGRAPHY *ISAAC F. ROOKS, JR., PSM #5416*

THIS MAP IS NEITHER FULL NOR COMPLETE WITHOUT THE "SURVEY AND MAP REPORT" AND DIGITAL FILE(S) REFERENCED IN SAID REPORT. UNLESS THIS MAP OR REPORT BEARS THE SIGNATURE AND ORIGINAL RAISED SEAL OF THE ABOVE FLORIDA LICENSED SURVEYOR AND MAPPER, IT IS FOR INFORMATIONAL PURPOSES ONLY AND IS NOT VALID.
NOTE:

I.F. ROOKS & ASSOCIATES, INC.
106 N.W. DRANE ST. PHOTOGRAMMETRY
PLANT CITY, FL 33566
(813) 752-2113

IFR NO.:	*FILE:*
SCALE:	*CONT. INTERVAL:*
DRAWN BY:	*CHK. BY:*
DATUM:	
REVISED:	

CADD FILE: 993316LAYOUT
DATE: MARCH 2006
SCALE: AS SHOWN
DRAWING NO. **3** of 16

REV	DATE	DESCRIPTION	BY
	3/6/06	ISSUED FOR BIDS	
	8/9/06	CONFORMED DRAWINGS	

STATE OF FLORIDA — STEVEN R. THOMPSON — CERTIFICATE NO. 38026

DRAWING TITLE: EXISTING CONDITIONS NORTH

PROJECT TITLE: HARDEE COUNTY LANDFILL EXPANSION CONSTRUCTION DRAWINGS

CLIENT: HARDEE COUNTY BOARD OF COUNTY COMMISSIONERS

SCS ENGINEERS
STEARNS, CONRAD AND SCHMIDT
CONSULTING ENGINEERS
5405 W. CYPRESS STREET, SUITE 200, TAMPA, FL 33619
PH (813) 621-0080 FAX NO. (813) 623-6757
FLORIDA CERTIFICATE OF AUTHORIZATION NO. 00004892

PROJ. NO.	DWN. BY:	CHK. BY:	QA BY:	APP. BY:
0919903.16	BLJ	SRN/LEK	SRN/LEK	CEH
DSN. BY: JHO/LEK				

FLORIDA DEPARTMENT OF ENVIRONMENTAL PROTECTION SOUTHWEST DISTRICT TAMPA AUG -9 2006

G:\DRG\FCT\0919903.16\993316LAYOUT.dwg, Aug 09, 2006 - 11:21am, Layout Name: EXTDRGNORTH By: eeee

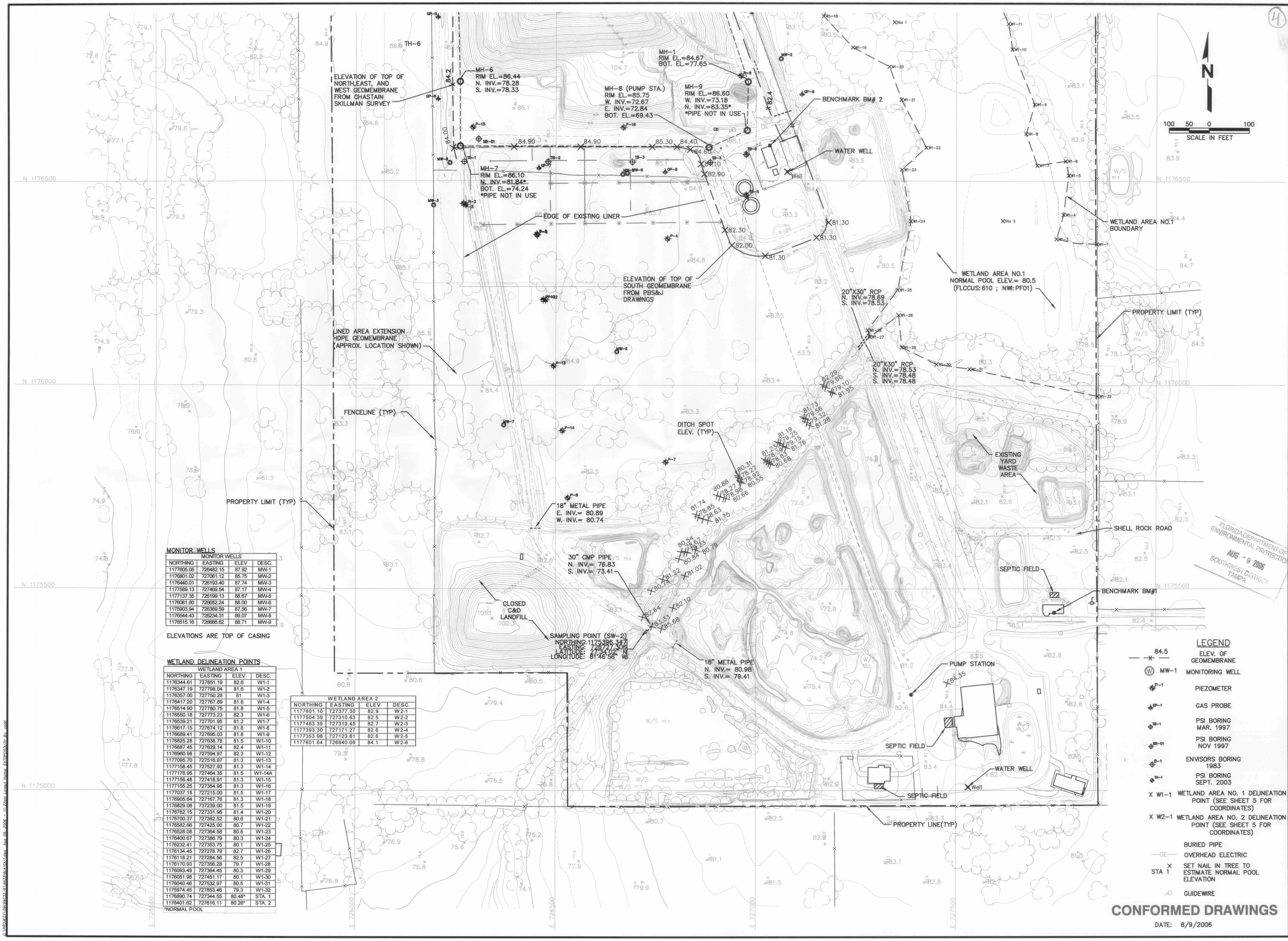

MONITOR WELLS

MONITOR WELLS			
NORTHING	EASTING	ELEV	DESC.
1177805.05	726462.15	87.92	MW-1
1178801.02	727061.12	85.75	MW-2
1176440.01	726193.40	87.74	MW-3
1177589.13	727469.54	87.17	MW-4
1177137.35	726199.13	88.67	MW-5
1176081.60	726652.24	88.00	MW-6
1175903.94	726389.59	87.56	MW-7
1176544.43	726234.31	89.07	MW-8
1176515.16	726666.62	88.71	MW-9

ELEVATIONS ARE TOP OF CASING

WETLAND DELINEATION POINTS

WETLAND AREA 1			
NORTHING	EASTING	ELEV	DESC.
1176344.61	727851.19	82.6	W1-1
1176347.19	727798.04	81.6	W1-2
1176357.00	727750.28	81	W1-3
1176417.20	727767.89	81.6	W1-4
1176514.90	727780.75	81.8	W1-5
1176550.18	727773.23	82.3	W1-6
1176539.21	727701.95	81.2	W1-7
1176617.15	727674.12	81.8	W1-8
1176689.41	727695.03	81.8	W1-9
1176825.28	727638.78	81.5	W1-10
1176887.45	727629.14	82.4	W1-11
1176960.98	727594.97	82.3	W1-12
1177095.70	727516.97	81.3	W1-13
1177158.45	727527.93	81.3	W1-14
1177178.95	727464.35	81.5	W1-14A
1177156.48	727418.91	81.3	W1-15
1177155.25	727354.95	81.3	W1-16
1177037.18	727215.00	81.5	W1-17
1176905.64	727167.76	81.3	W1-18
1176829.08	737239.00	81.5	W1-19
1176782.15	727331.95	81.4	W1-20
1176700.37	727362.52	80.6	W1-21
1176582.66	727425.00	80.7	W1-22
1176528.08	727364.58	80.8	W1-23
1176400.67	727386.79	80.3	W1-24
1176232.41	727353.75	80.1	W1-25
1176134.45	727278.79	82.7	W1-26
1176118.21	727284.56	82.5	W1-27
1176170.93	727356.28	79.7	W1-28
1176093.49	727364.45	80.3	W1-29
1176051.98	727451.17	80.1	W1-30
1176040.46	727532.97	80.5	W1-31
1175974.45	727853.46	79.3	W1-32
1176890.74	727344.55	80.48*	STA. 1
1176401.62	727616.11	80.26*	STA. 2

*NORMAL POOL

WETLAND AREA 2			
NORTHING	EASTING	ELEV	DESC.
1177601.10	727377.30	82.9	W2-1
1177504.39	727310.63	82.5	W2-2
1177483.39	727319.45	82.7	W2-3
1177393.30	727171.27	82.6	W2-4
1177353.98	727123.81	82.6	W2-5
1177601.64	726840.09	84.1	W2-6

LEGEND

84.5	ELEV. OF GEOMEMBRANE
MW-1	MONITORING WELL
P-1	PIEZOMETER
GP-1	GAS PROBE
TB-1	PSI BORING MAR. 1997
SB-01	PSI BORING NOV 1997
B-1	ENVISORS BORING 1983
TH-1	PSI BORING SEPT. 2003
X W1-1	WETLAND AREA NO. 1 DELINEATION POINT (SEE SHEET 5 FOR COORDINATES)
X W2-1	WETLAND AREA NO. 2 DELINEATION POINT (SEE SHEET 5 FOR COORDINATES)
	BURIED PIPE
OE	OVERHEAD ELECTRIC
X STA 1	SET NAIL IN TREE TO ESTIMATE NORMAL POOL ELEVATION
	GUIDEWIRE

CONFORMED DRAWINGS

DATE: 8/9/2006

REV	DATE	DESCRIPTION	BY
1	3/6/06	ISSUED FOR BIDS	
2	8/9/06	CONFORMED DRAWINGS	

DRAWING TITLE: EXISTING CONDITIONS SOUTH

PROJECT TITLE: HARDEE COUNTY LANDFILL EXPANSION CONSTRUCTION DRAWINGS

CLIENT: HARDEE COUNTY BOARD OF COUNTY COMMISSIONERS

SCS ENGINEERS
STEARNS, CONRAD AND SCHMIDT CONSULTING ENGINEERS
302 U.S. HWY. 301 NORTH, SUITE 700, TAMPA, FL 33619
PH (813) 621-4960 FAX NO. (813) 623-6757
FLORIDA CERTIFICATE OF AUTHORIZATION NO. 00004892

PROJ. NO. 09199033.16 | DWN. BY: BLJ | D/A RVW. BY: SRN/LEK | DSN. BY: JHO/LEK | CKR. BY: SRN/LEK | APPR. BY: CEH

CADD FILE: 993316LAYOUT

DATE: MARCH 2006

SCALE: AS SHOWN

DRAWING NO. 4 of 16

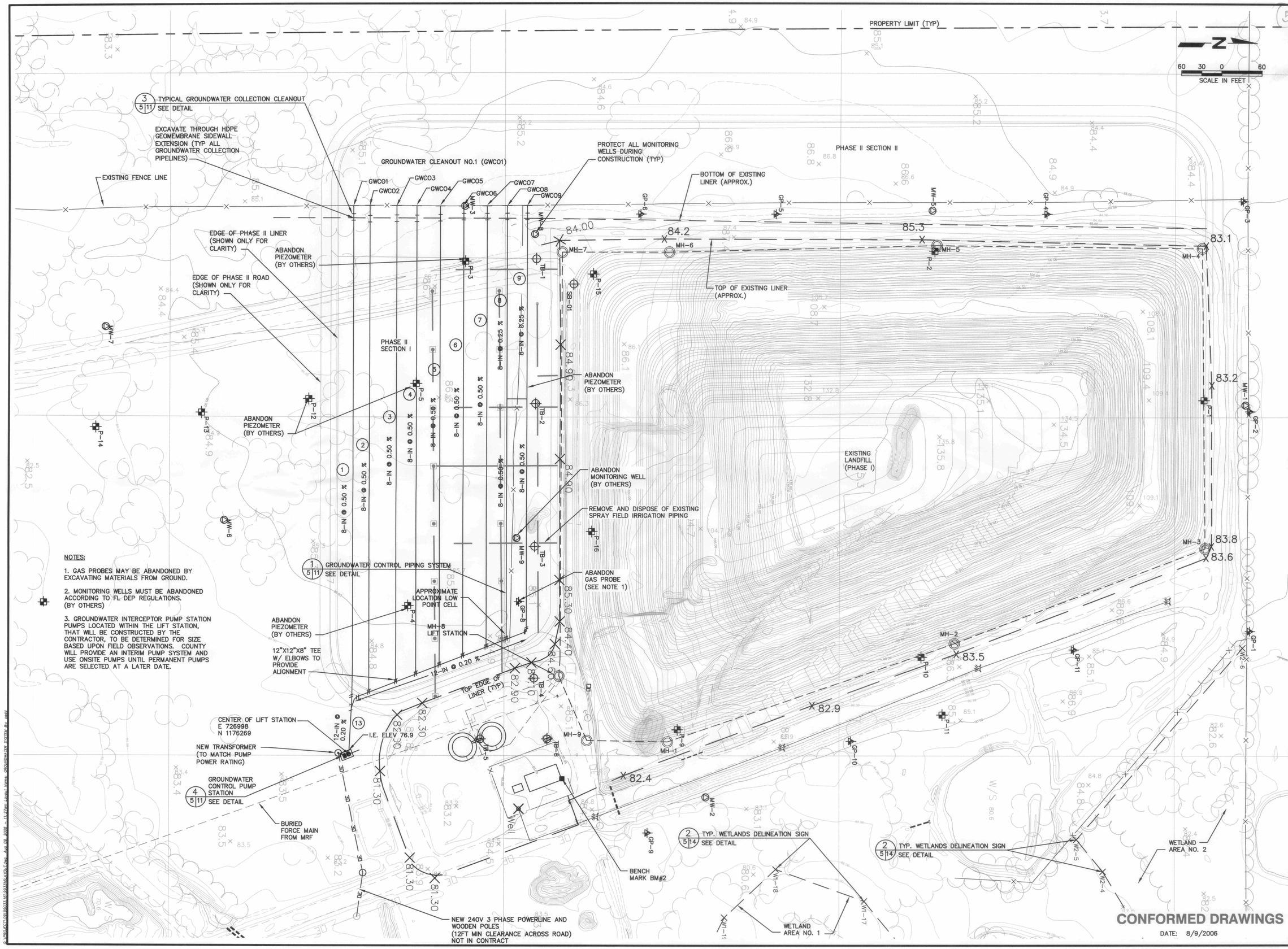

NOTES:

1. GAS PROBES MAY BE ABANDONED BY EXCAVATING MATERIALS FROM GROUND.

2. MONITORING WELLS MUST BE ABANDONED ACCORDING TO FL DEP REGULATIONS. (BY OTHERS)

3. GROUNDWATER INTERCEPTOR PUMP STATION PUMPS LOCATED WITHIN THE LIFT STATION, THAT WILL BE CONSTRUCTED BY THE CONTRACTOR, TO BE DETERMINED FOR SIZE BASED UPON FIELD OBSERVATIONS. COUNTY WILL PROVIDE AN INTERIM PUMP SYSTEM AND USE ONSITE PUMPS UNTIL PERMANENT PUMPS ARE SELECTED AT A LATER DATE.

CONFORMED DRAWINGS

DATE: 8/9/2006

REV	DATE	DESCRIPTION	BY
1	3/6/06	ISSUED FOR BIDS	
2	8/9/06	CONFORMED DRAWINGS	

DRAWING TITLE: PHASE II GROUNDWATER CONTROL SYSTEM PLAN

PROJECT TITLE: HARDEE COUNTY LANDFILL EXPANSION CONSTRUCTION DRAWINGS

CLIENT: HARDEE COUNTY BOARD OF COUNTY COMMISSIONERS

FLORIDA DEPARTMENT OF ENVIRONMENTAL PROTECTION
AUG - 9 2006
NORTHWEST DISTRICT TAMPA

SCS ENGINEERS
STEARNS, CONRAD AND SCHMIDT CONSULTING ENGINEERS
6203 ADAMO DRIVE, SUITE 100, TAMPA, FL 33616
PH: (813) 621-4080 FAX NO. (813) 623-6707
FLORIDA CERTIFICATE OF AUTHORIZATION NO. 00004892

PROJ. NO. 09199033.16 | DWN. BY: BLJ | Q/A R/W BY: SRN/LEK
DSN. BY: JHO/LEK | CHK. BY: SRN/LEK | APP. BY: CEH

CADD FILE: 993316LAYOUT

DATE: MARCH 2006

SCALE: AS SHOWN

DRAWING NO. 5 of 16

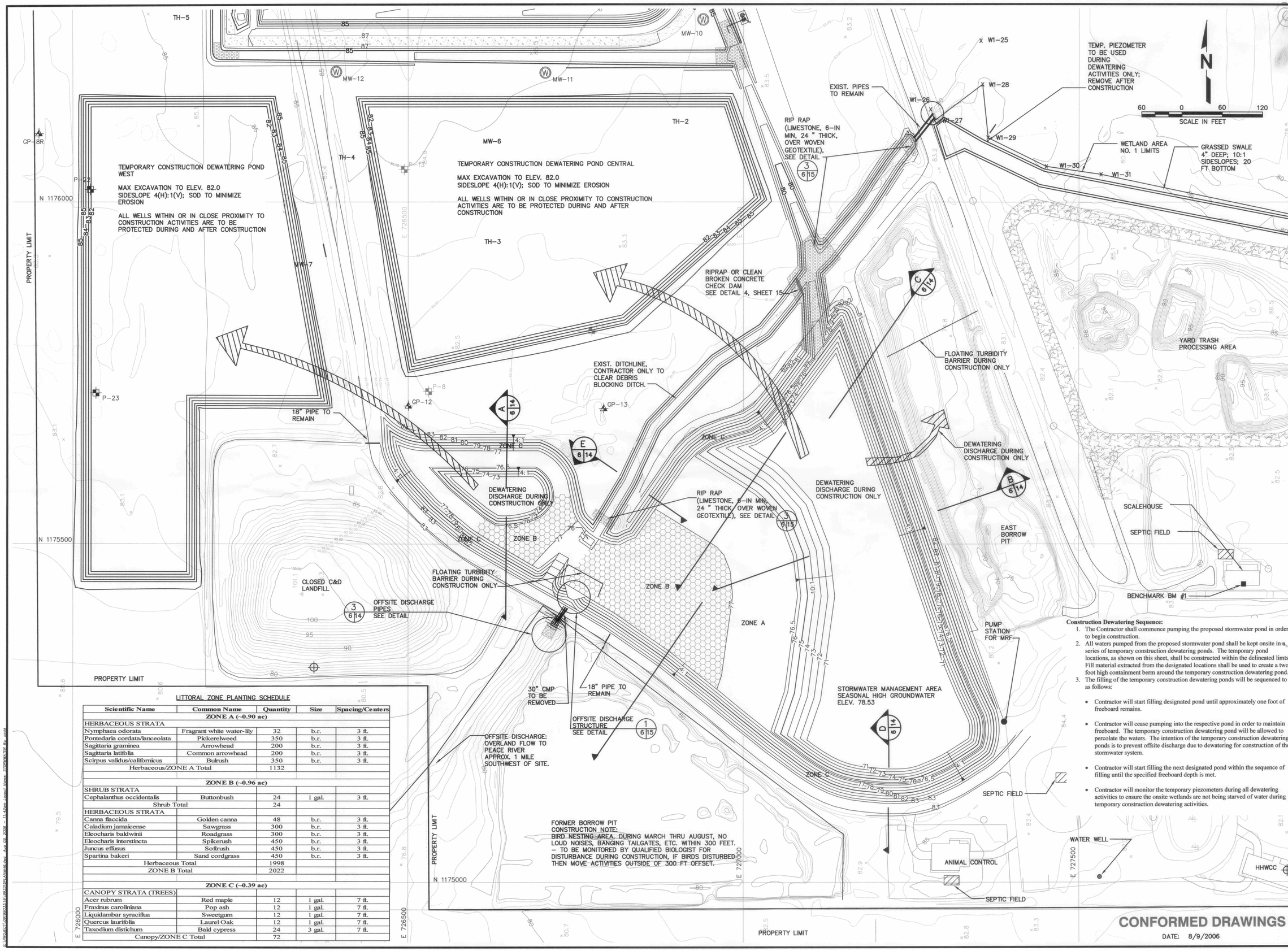

Construction Dewatering Sequence:

1. The Contractor shall commence pumping the proposed stormwater pond in order to begin construction.
2. All waters pumped from the proposed stormwater pond shall be kept onsite in a series of temporary construction dewatering ponds. The temporary pond locations, as shown on this sheet, shall be constructed within the delineated limts. Fill material extracted from the designated locations shall be used to create a two foot high containment berm around the temporary construction dewatering pond.
3. The filling of the temporary construction dewatering ponds will be sequenced to as follows:
   - Contractor will start filling designated pond until approximately one foot of freeboard remains.
   - Contractor will cease pumping into the respective pond in order to maintain freeboard. The temporary construction dewatering pond will be allowed to percolate the waters. The intention of the temporary construction dewatering ponds is to prevent offsite discharge due to dewatering for construction of the stormwater system.
   - Contractor will start filling the next designated pond within the sequence of filling until the specified freeboard depth is met.
   - Contractor will monitor the temporary piezometers during all dewatering activities to ensure the onsite wetlands are not being starved of water during temporary construction dewatering activities.

LITTORAL ZONE PLANTING SCHEDULE

Scientific Name	Common Name	Quantity	Size	Spacing/Centers
ZONE A (~0.90 ac)				
HERBACEOUS STRATA				
Nymphaea odorata	Fragrant white water-lily	32	b.r.	3 ft.
Pontedaria cordata/lanceolata	Pickerelweed	350	b.r.	3 ft.
Sagittaria graminea	Arrowhead	200	b.r.	3 ft.
Sagittaria latifolia	Common arrowhead	200	b.r.	3 ft.
Scirpus validus/californicus	Bulrush	350	b.r.	3 ft.
Herbaceous/ZONE A Total		1132		
ZONE B (~0.96 ac)				
SHRUB STRATA				
Cephalanthus occidentalis	Buttonbush	24	1 gal.	3 ft.
Shrub Total		24		
HERBACEOUS STRATA				
Canna flaccida	Golden canna	48	b.r.	3 ft.
Caladium jamaicense	Sawgrass	300	b.r.	3 ft.
Eleocharis baldwinii	Roadgrass	300	b.r.	3 ft.
Eleocharis interstincta	Spikerush	450	b.r.	3 ft.
Juncus effusus	Softrush	450	b.r.	3 ft.
Spartina bakeri	Sand cordgrass	450	b.r.	3 ft.
Herbaceous Total		1998		
ZONE B Total		2022		
ZONE C (~0.39 ac)				
CANOPY STRATA (TREES)				
Acer rubrum	Red maple	12	1 gal.	7 ft.
Fraxinus caroliniana	Pop ash	12	1 gal.	7 ft.
Liquidambar syraciflua	Sweetgum	12	1 gal.	7 ft.
Quercus laurifolia	Laurel Oak	12	1 gal.	7 ft.
Taxodium distichum	Bald cypress	24	3 gal.	7 ft.
Canopy/ZONE C Total		72		

CONFORMED DRAWINGS

DATE: 8/9/2006

REV	DATE	DESCRIPTION	BY
△	3/6/06	ISSUED FOR BIDS	
△	8/9/06	CONFORMED DRAWINGS	
△			
△			
△			
△			

DRAWING TITLE: **PHASE II STORMWATER MANAGEMENT IMPROVEMENTS**

PROJECT TITLE: **HARDEE COUNTY LANDFILL EXPANSION CONSTRUCTION DRAWINGS**

CLIENT: **HARDEE COUNTY BOARD OF COUNTY COMMISSIONERS**

FLORIDA DEPARTMENT OF ENVIRONMENTAL PROTECTION
AUG - 9 2006
SOUTHWEST DISTRICT TAMPA

SCS ENGINEERS
STEARNS, CONRAD AND SCHMIDT CONSULTING ENGINEERS
9311-3 HWY 301 NORTH, SUITE 100, TAMPA, FL 33619
PH (813) 622-0060 FAX NO. (813) 622-6757
FLORIDA CERTIFICATE OF AUTHORIZATION NO. 00004892

PROJ. NO. 09199033.16 | DSN. BY: JHO/LEK | DWN. BY: JHO | CHK. BY: SRN/LEK | Q/A BY: SRN/LEK | APP. BY: CEH

CADD FILE: 993316PLAN

DATE: MARCH 2006

SCALE: AS SHOWN

DRAWING NO. 6 of 16

R. TODD LEWIS No. 39922 STATE OF FLORIDA PROFESSIONAL ENGINEER
SCHMIDT No. 32 STATE OF FLORIDA PROFESSIONAL ENGINEER
CERTIFICATE NO. 00026

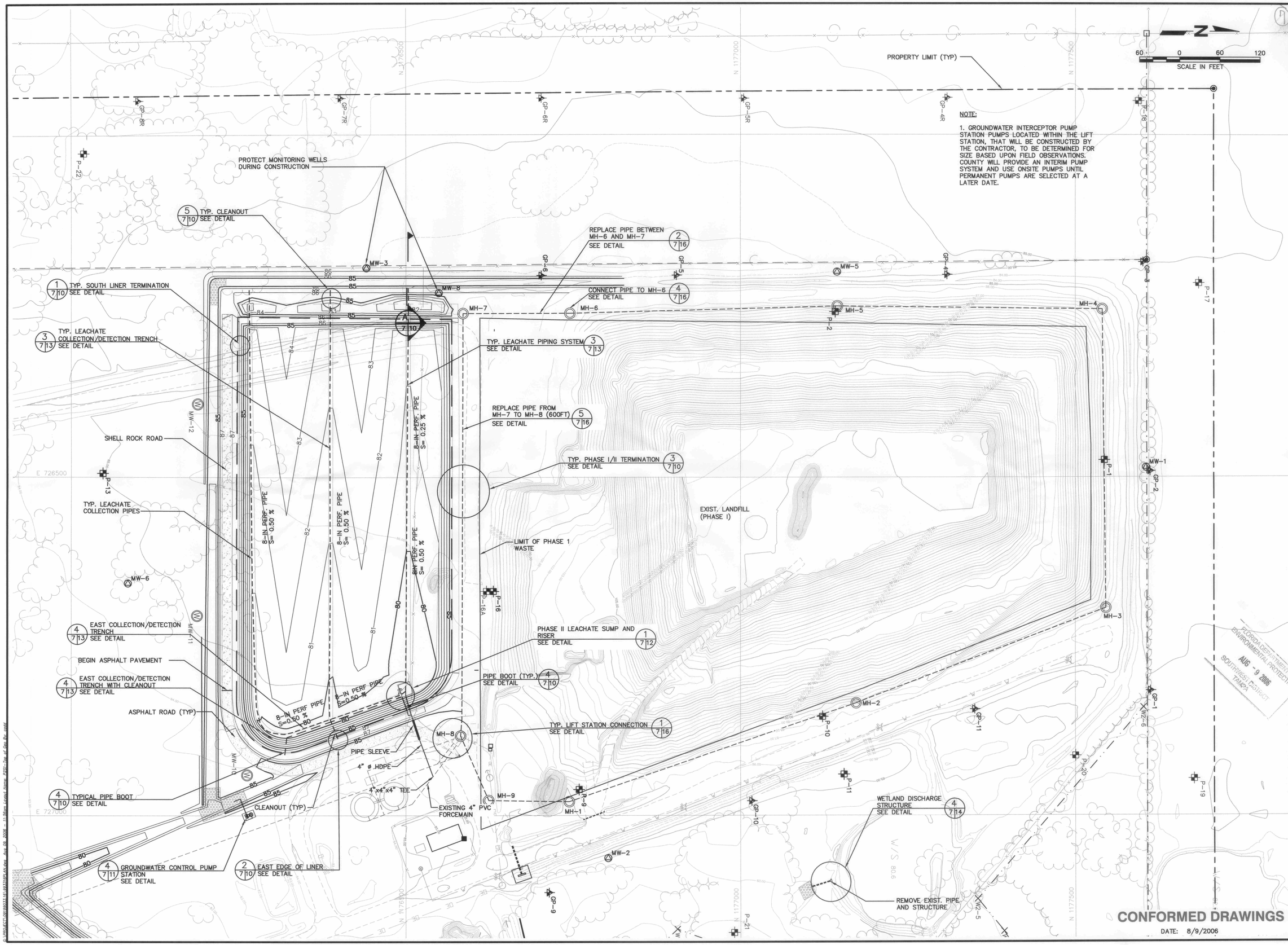

REV	DATE	DESCRIPTION	BY
	3/6/06	ISSUED FOR BIDS	
	8/9/06	CONFORMED DRAWINGS	

STANLEY R. FERGUSON STATE OF FLORIDA LICENSE No. 56028 SCS ENGINEERS CERTIFICATE NO. 5802B

DRAWING TITLE: PHASE II - SECTION 1 TOP OF GEOMEMBRANE PLAN

PROJECT TITLE: HARDEE COUNTY LANDFILL EXPANSION CONSTRUCTION DRAWINGS

CLIENT: HARDEE COUNTY BOARD OF COUNTY COMMISSIONERS

SCS ENGINEERS
STEARNS, CONRAD AND SCHMIDT CONSULTING ENGINEERS
3012 U.S. HWY. 301 NORTH, SUITE 700, TAMPA, FL 33619
PH (813) 621-0080 FAX NO. (813) 623-6757
FLORIDA CERTIFICATE OF AUTHORIZATION NO. 00004892

PROJ. NO. 0993033.16 | DWN. BY: BLJ | Q/A RVW BY: SRN/LEK
DSN. BY: JHO/LEK | CHK. BY: SRN/LEK | APP. BY: CEH

CADD FILE: 993316PLAN

DATE: MARCH 2006

SCALE: AS SHOWN

DRAWING NO. 7 of 16

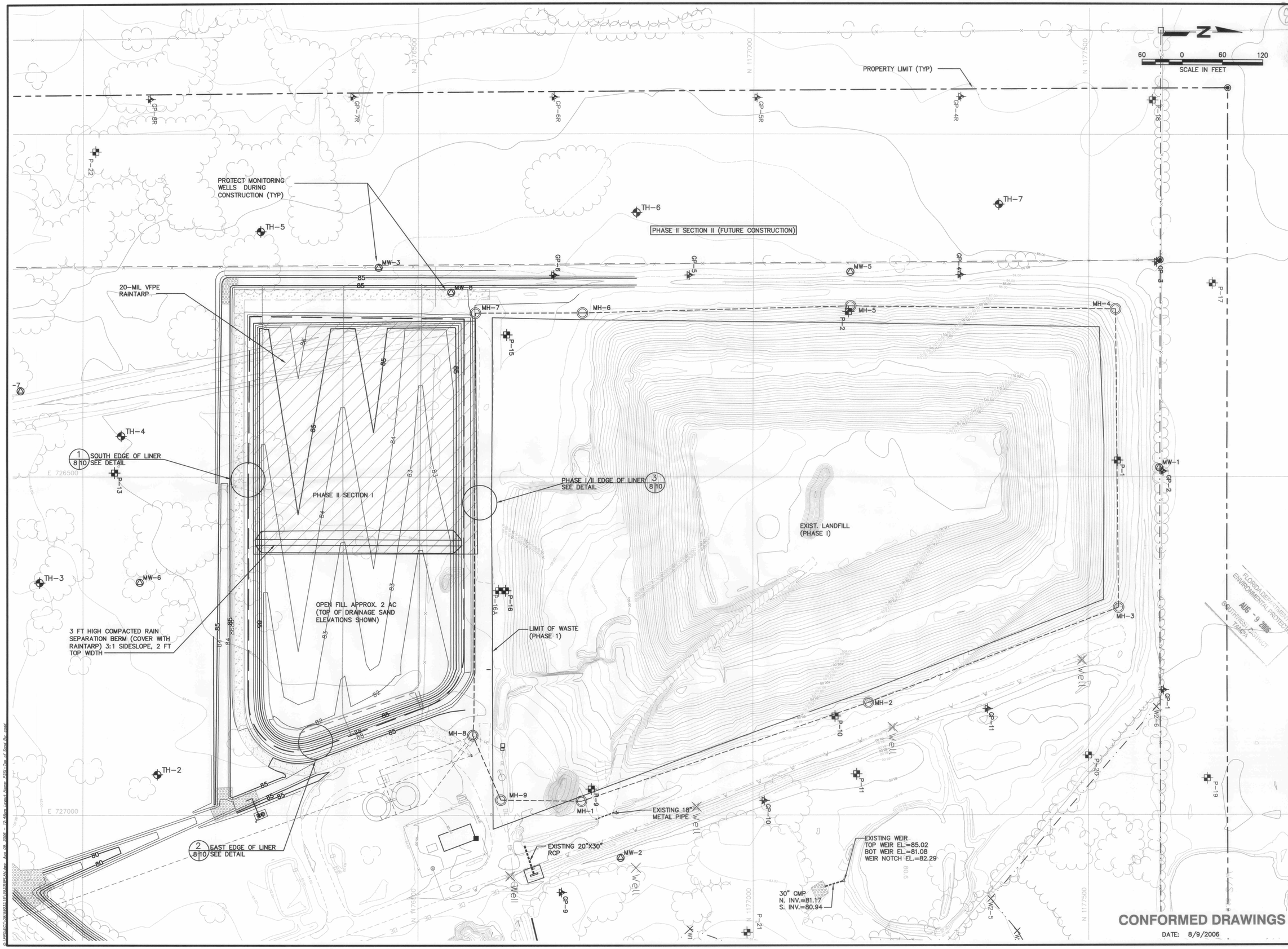

REV	DATE	DESCRIPTION	BY
△	3/6/06	ISSUED FOR BIDS	
△	8/9/06	CONFORMED DRAWINGS	

DRAWING TITLE: PHASE II - SECTION I SITE PLAN

PROJECT TITLE: HARDEE COUNTY LANDFILL EXPANSION CONSTRUCTION DRAWINGS

CLIENT: HARDEE COUNTY BOARD OF COUNTY COMMISSIONERS

SCS ENGINEERS
STEARNS, CONRAD AND SCHMIDT CONSULTING ENGINEERS
3012 US HWY. 301 NORTH, SUITE 700, TAMPA, FL 33619
PH: (813) 621-4080 FAX NO. (813) 623-0757
FLORIDA CERTIFICATE OF AUTHORIZATION NO. 00004892

PROJ. NO: 09199033.16 | DWN. BY: BLJ | Q/A RVW BY: SRN/LEK
DSN. BY: JHO/LEK | CHK. BY: SRN/LEK | APP. BY: CEH

CADD FILE: 993316PLAN

DATE: MARCH 2006

SCALE: AS SHOWN

DRAWING NO. 8 of 16

PROPERTY LIMIT (TYP)

100 50 0 100
SCALE IN FEET

TEMPORARY CONSTRUCTION DEWATERING POND WEST MAX EXCAVATION TO ELEV. 82.0 SIDESLOPE 4(H):1(V); SOD TO MINIMIZE EROSION

ALL WELLS WITHIN OR IN CLOSE PROXIMITY TO CONSTRUCTION ACTIVITIES ARE TO BE PROTECTED DURING AND AFTER CONSTRUCTION

NOT IN CONTRACT

CONTRACTORS STORAGE/LAYDOWN AREA

SILT FENCE AROUND ENTIRE PERIMETER

ALL MONITORING WELL, PIEZOMETER, GAS PROBES TO BE PROTECTED AGAINST DAMAGE DURING CONSTRUCTION

RIPRAP (PERMANENT)

OUTLINE OF PHASE II SECTION I CELL

SILT FENCE/HAYBALES DURING CONSTRUCTION LEAVE IN-PLACE AFTER WORK

EXISTING LANDFILL (PHASE 1)

TEMPORARY CONSTRUCTION DEWATERING POND CENTRAL MAX EXCAVATION TO ELEV. 82.0 SIDESLOPE 4(H):1(V); SOD TO MINIMIZE EROSION

ALL WELLS WITHIN OR IN CLOSE PROXIMITY TO CONSTRUCTION ACTIVITIES ARE TO BE PROTECTED DURING AND AFTER CONSTRUCTION

RIPRAP (PERMANENT)

RIPRAP (PERMANENT)

BEGIN ASPHALT PAVEMENT

SILT FENCE/HAYBALES DURING CONSTRUCTION LEAVE IN-PLACE AFTER WORK SEE DETAIL 7/9|15

CHECK DAM (PERMANENT)

SILT FENCE/HAYBALES DURING CONSTRUCTION SEE DETAIL 7/9|15

RIPRAP (PERMANENT)

CONSTRUCTION ENTRANCE SEE DETAIL 6/9|15

CONSTRUCTION TRAILERS/STORAGE

RIPRAP (PERMANENT)

RIPRAP (PERMANENT)

SILT FENCE TO MINIMIZE RUNOFF INTO WETLAND SEE DETAIL 7/9|15

CONSTRUCTION TRAILERS/STORAGE

FOR WETLANDS CONSTRUCTION PLAN SEE SHEET 6

RIPRAP (PERMANENT)

SILT FENCE HAYBALES (TYP) LEAVE AFTER COMPLETION OF WORK SEE DETAIL 7/9|15

TEMP. PIEZOMETER TO BE USED DURING DEWATERING ACTIVITIES ONLY; REMOVE UPON COMPLETION OF DEWATERING ACTIVITES

GRASS RECHARGE/ TREATMENT SWALE SEE DETAIL 5/9|15

HAYBALES ALONG DITCH EVERY 100 FEET DURING CONSTRUCTION SEE DETAIL 2/9|15

RIPRAP (PERMANENT)

TYP. WETLANDS DELINEATION SIGN SEE DETAIL 2/9|14

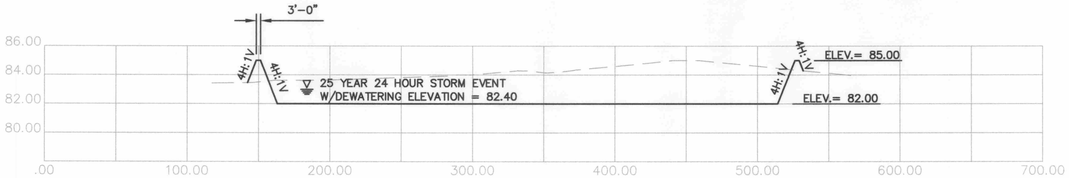

TEMPORARY CONSTRUCTION DEWATERING POND WEST (A/9|9)

SCALE: HORIZ = 1"= 50'
VERT= 1" = 4

NOTE:

1. ALL SLOPES ARE TO BE SODDED.
2. CONTRACTOR SHALL HAVE EROSION AND SEDIMENTATION CONTROLS IN PLACE DURING ALL CONSTRUCTION AND DEWATERING ACTIVITIES TO THE SATISFACTION OF THE ENGINEER.

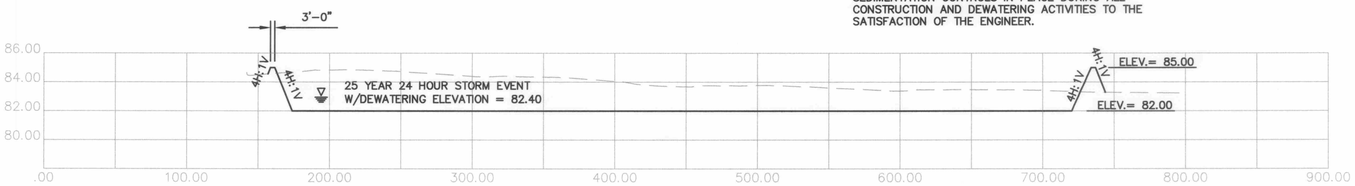

TEMPORARY CONSTRUCTION DEWATERING POND CENTRAL (B/9|9)

SCALE: HORIZ = 1"= 50'
VERT= 1" = 4

FLORIDA DEPARTMENT OF ENVIRONMENTAL PROTECTION
AUG - 9 2006
SOUTHWEST DISTRICT
TAMPA

CONFORMED DRAWINGS
DATE: 8/9/2006

REV	DATE	DESCRIPTION	BY
1	3/6/06	ISSUED FOR BIDS	
2	8/9/06	CONFORMED DRAWINGS	

STATE OF FLORIDA
JAMES R. HOOVER
No. 36026
PROFESSIONAL ENGINEER
CERTIFICATE NO. 36026

DRAWING TITLE: EROSION AND SEDIMENTATION CONTROL PLAN

PROJECT TITLE: HARDEE COUNTY LANDFILL EXPANSION CONSTRUCTION DRAWINGS

CLIENT: HARDEE COUNTY BOARD OF COUNTY COMMISSIONERS

SCS ENGINEERS
STEARNS, CONRAD AND SCHMIDT
CONSULTING ENGINEERS
3072 U.S. HWY. 301 NORTH, SUITE 700, TAMPA, FL 33619
PH: (813) 621-9691 FAX: (813) 622-7977
FLORIDA CERTIFICATE OF AUTHORIZATION NO. 00004892

PROJ. NO.	DWN. BY:	Q/A RVW. BY:
0919903.16	BLJ	SRN/LEK
DSN. BY: JHO/LEK	CHK. BY: SRN/LEK	APP. BY: CEH

CADD FILE: 993316PLAN

DATE: MARCH 2006

SCALE: AS SHOWN

DRAWING NO. 9 of 16

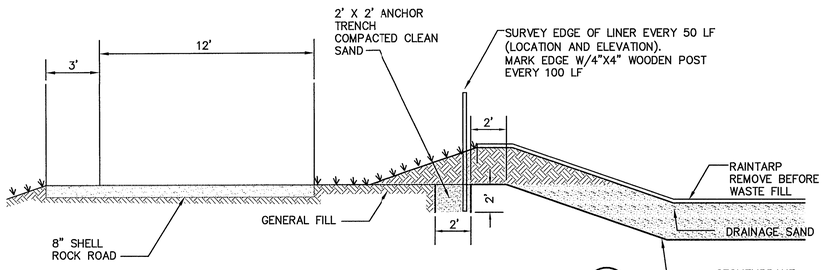

SOUTH OF PHASE II EDGE OF LINER DETAIL (1 / 10)
SCALE: H = 1" = 4'
V = 1" = 4'
7,8

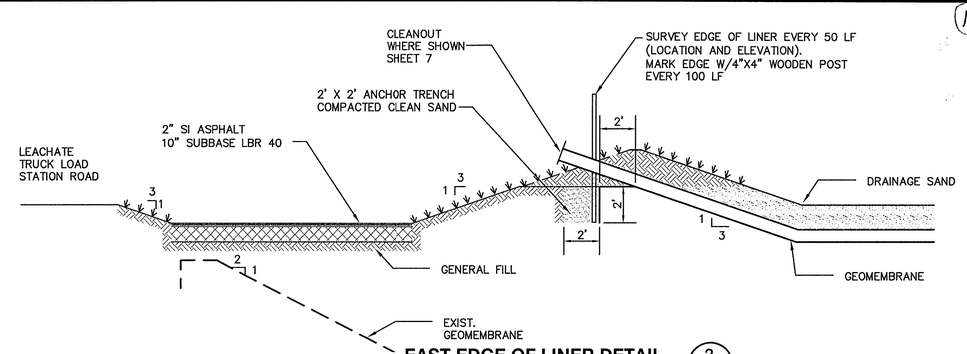

EAST EDGE OF LINER DETAIL (2 / 10)
SCALE: H = 1" = 4'
V = 1" = 4'
7,8

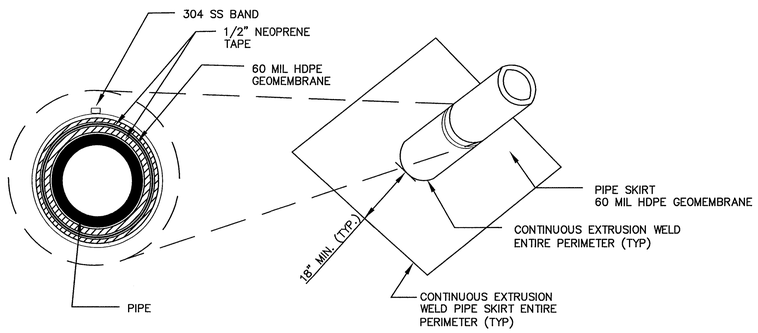

TYPICAL PIPE BOOT DETAIL (4 / 10)
NOT TO SCALE
7, 10, 12

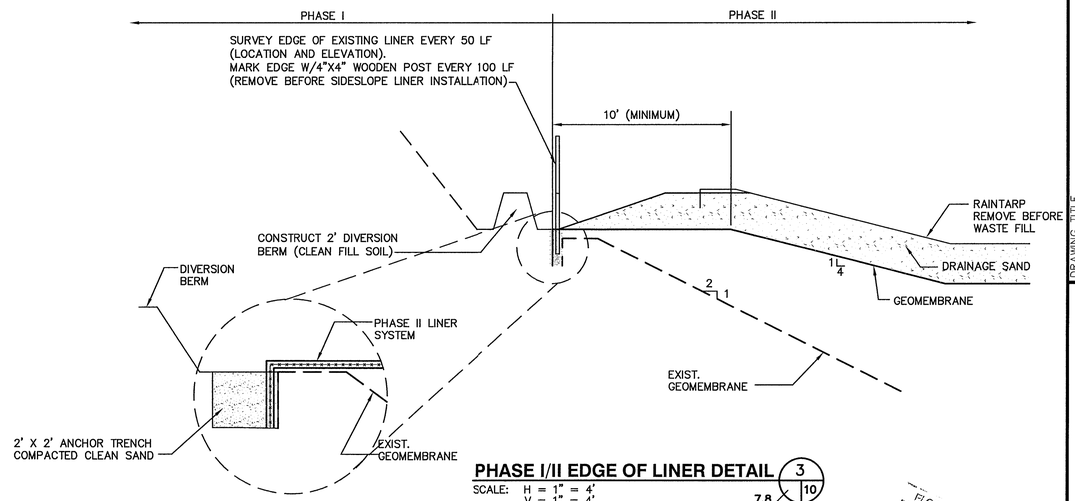

PHASE I/II EDGE OF LINER DETAIL (3 / 10)
SCALE: H = 1" = 4'
V = 1" = 4'
7,8

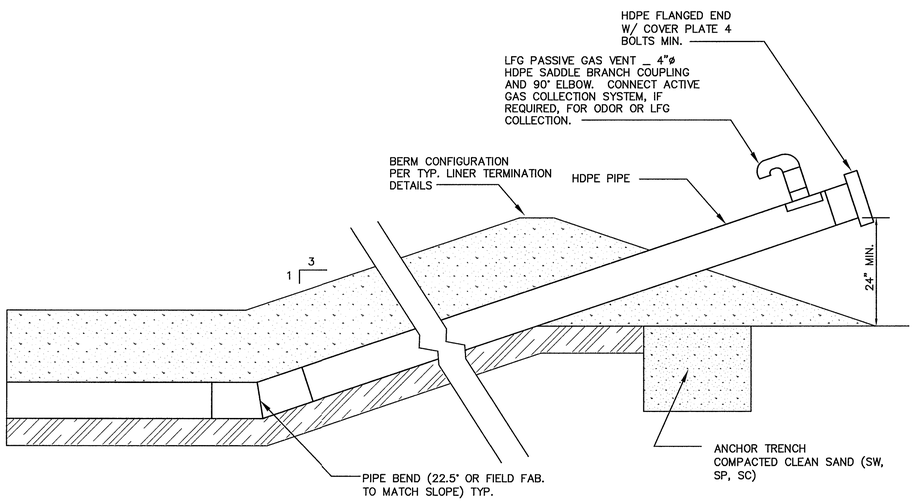

TYPICAL LEACHATE CLEANOUT DETAIL (5 / 7 10)
NOT TO SCALE

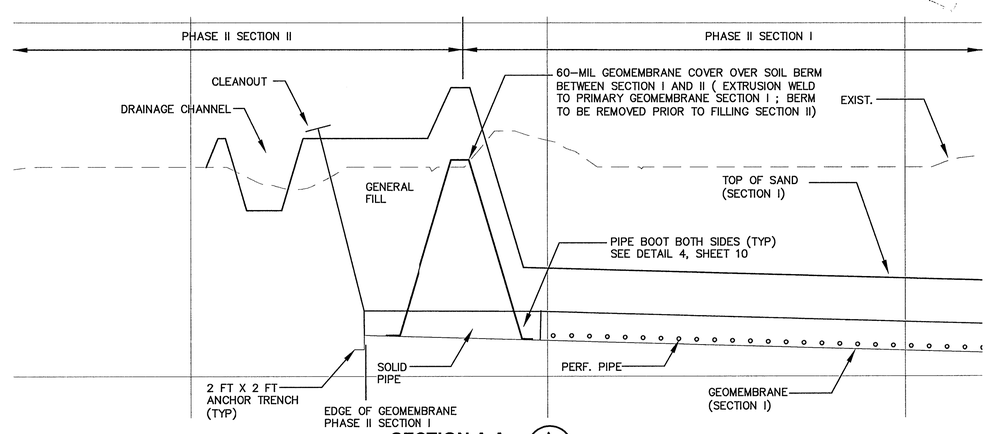

SECTION A-A (A / 10)
SCALE: NOT TO SCALE
7, 11

FLORIDA DEPARTMENT OF ENVIRONMENTAL PROTECTION
AUG - 9 2006
SOUTHWEST DISTRICT
TAMPA

CONFORMED DRAWINGS
DATE: 8/9/2006

REV	DATE	DESCRIPTION	BY
	3/6/06	ISSUED FOR BIDS	
	8/9/06	CONFORMED DRAWINGS	

DRAWING TITLE: DETAILS-1

PROJECT TITLE: HARDEE COUNTY LANDFILL EXPANSION CONSTRUCTION DRAWINGS

CLIENT: HARDEE COUNTY BOARD OF COUNTY COMMISSIONERS

SCS ENGINEERS
STEARNS, CONRAD AND SCHMIDT CONSULTING ENGINEERS
3920 U.S. HWY 92 EAST, TAMPA, FL 33619
PH (813) 621-0080 FAX NO. (813) 622-6757
FLORIDA CERTIFICATE OF AUTHORIZATION NO. 00004892

PROJ. NO. 09199033.16 | DWN: BY: SDA/JHO | Q/A RVW BY: SRN/LEK
DSN. BY: JHO/LEK | CHK: BY: SRN/LEK | APP. BY: CEH

CADD FILE: 993316XSEC

DATE: MARCH 2006

SCALE: AS SHOWN

DRAWING NO. 10 of 16

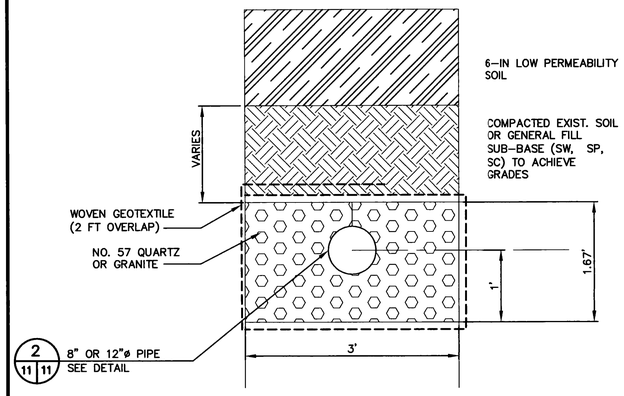

GROUNDWATER PIPE TRENCH DETAIL (1 / 11 11)

SCALE: 1"=4'

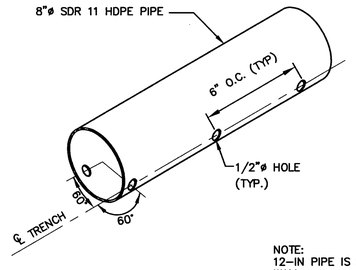

NOTE: 12-IN PIPE IS SOLID WALL

8-IN PERFORATED GROUNDWATER PIPE DETAIL (2 / 11 11)

NOT TO SCALE

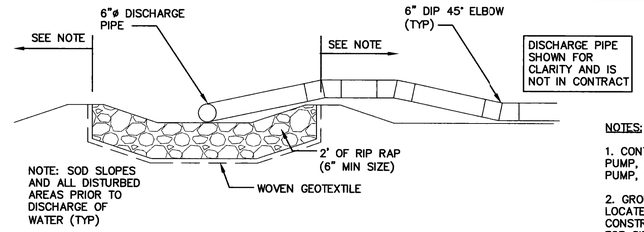

NOTES:

1. CONTRACTOR TO INSTALL ALL ITEMS SHOWN EXCEPT PUMP, VALVES, AND ACCESSORIES. COUNTY TO PROVIDE PUMP, VALVES, AND ACCESSORIES.

2. GROUNDWATER INTERCEPTOR PUMP STATION PUMPS LOCATED WITHIN THE LIFT STATION, THAT WILL BE CONSTRUCTED BY THE CONTRACTOR, TO BE DETERMINED FOR SIZE BASED UPON FIELD OBSERVATIONS. COUNTY WILL PROVIDE AN INTERIM PUMP SYSTEM AND USE ONSITE PUMPS UNTIL PERMANENT PUMPS ARE SELECTED AT A LATER DATE.

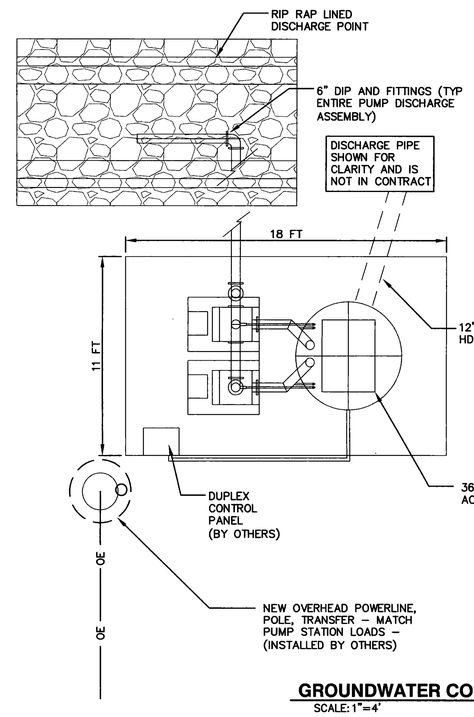

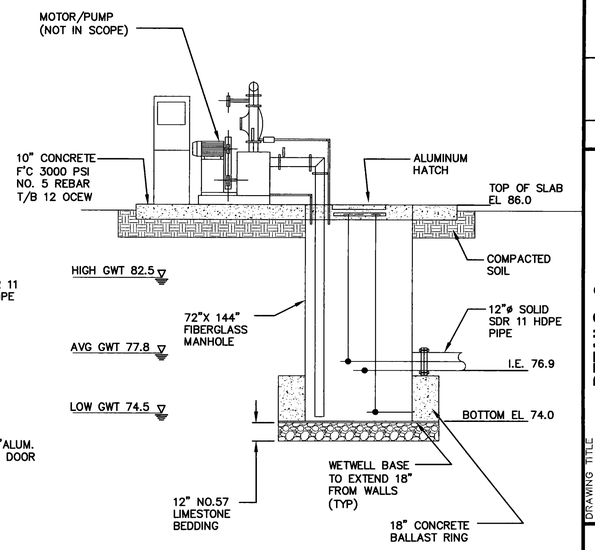

GROUNDWATER CONTROL PUMP STATION DETAIL (4 / 11)

SCALE: 1"=4'

5,6

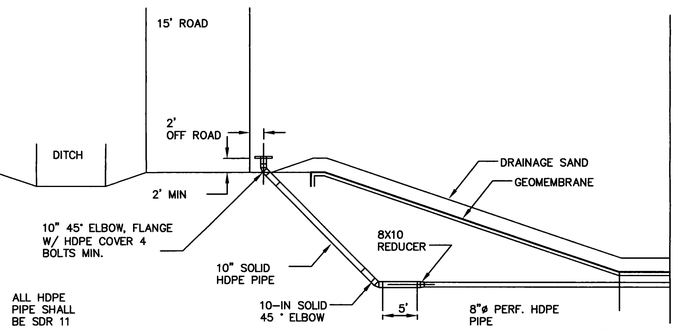

GROUNDWATER COLLECTION PIPE CLEANOUT DETAIL (3 / 11)

SCALE: 1"=4'

5,11

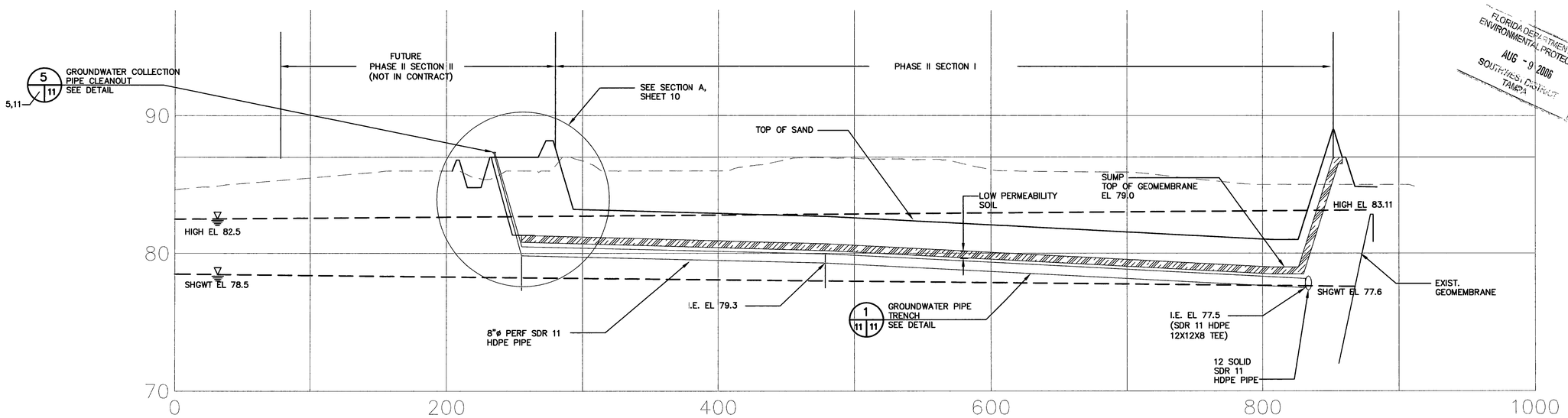

TYPICAL GROUNDWATER CONTROL PIPING SYSTEM DETAIL (5 / 5 11)

HORIZ. SCALE: 1"=40'
VERT. SCALE: 1"=4'

FLORIDA DEPARTMENT OF ENVIRONMENTAL PROTECTION
AUG - 9 2006
SOUTHWEST DISTRICT TAMPA

CONFORMED DRAWINGS

DATE: 8/9/2006

REV	DATE	DESCRIPTION	BY
1	3/6/06	ISSUED FOR BIDS	
2	8/9/06	CONFORMED DRAWINGS	

DRAWING TITLE: DETAILS - 2

PROJECT TITLE: HARDEE COUNTY LANDFILL EXPANSION CONSTRUCTION DRAWINGS

CLIENT: HARDEE COUNTY BOARD OF COUNTY COMMISSIONERS

SCS ENGINEERS
STEARNS, CONRAD AND SCHMIDT CONSULTING ENGINEERS
3012 U.S. HWY. 301 NORTH, SUITE 700, TAMPA, FL 33619
PH (813) 621-0080 FAX NO. (813) 623-6757
FLORIDA CERTIFICATE OF AUTHORIZATION NO. 00004892

PROJ. NO. 0993316.16 | DWN. BY: GAV | Q/A BY: SRN/LEK
DSN. BY: LEK/JHO | CHK. BY: SRN/LEK | APP. BY: CEH

CADD FILE: 993316DETL6

DATE: MARCH 2006

SCALE: AS SHOWN

DRAWING NO. 11 of 16

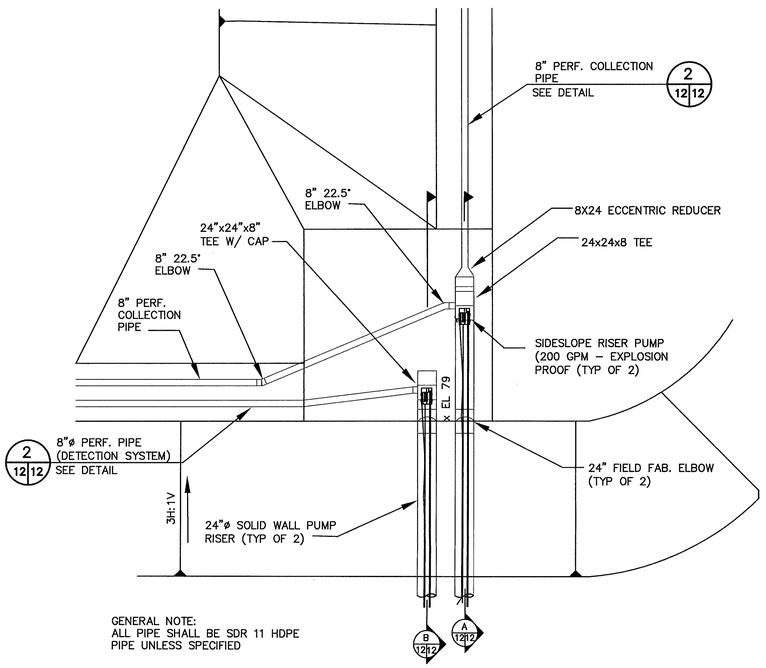

GENERAL NOTE:
ALL PIPE SHALL BE SDR 11 HDPE PIPE UNLESS SPECIFIED

PHASE II LEACHATE SUMP AND RISER DETAIL (1 | 7|12)

NOT TO SCALE

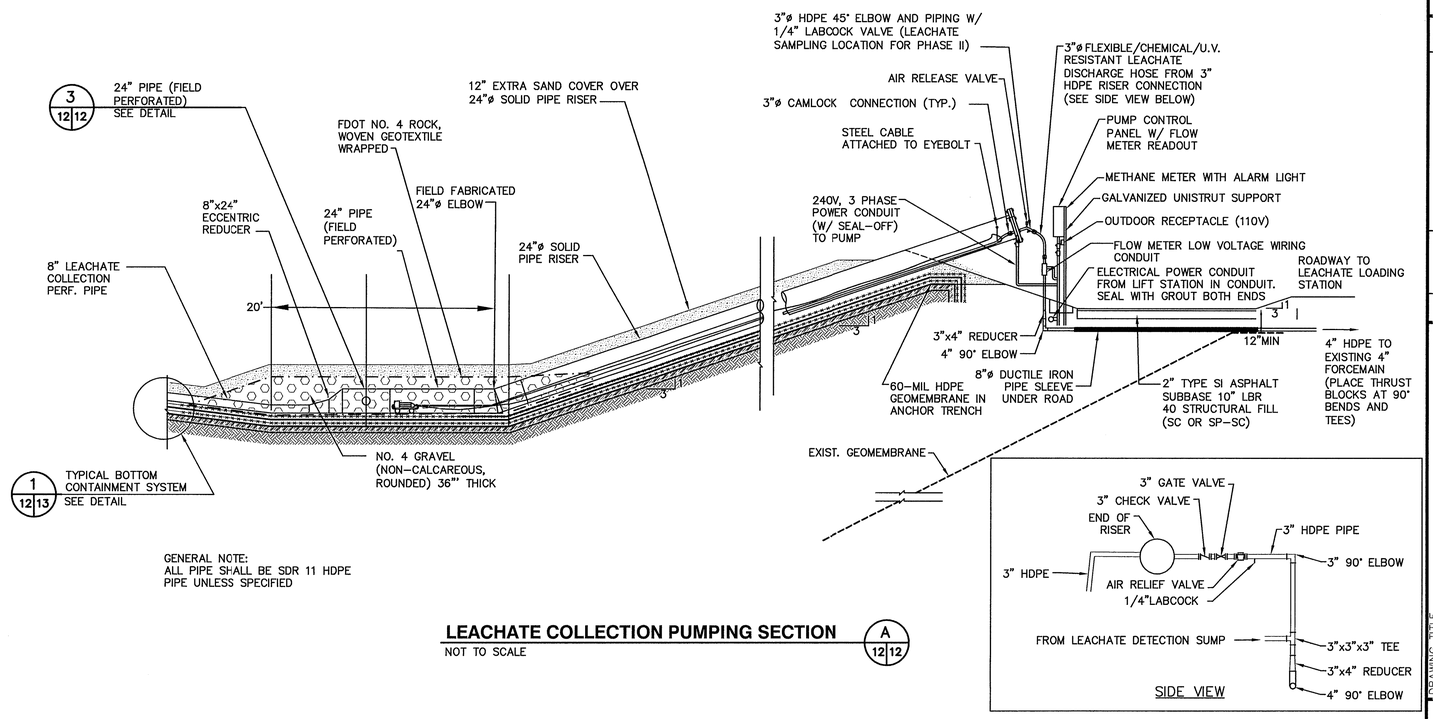

GENERAL NOTE:
ALL PIPE SHALL BE SDR 11 HDPE PIPE UNLESS SPECIFIED

LEACHATE COLLECTION PUMPING SECTION (A | 12|12)

NOT TO SCALE

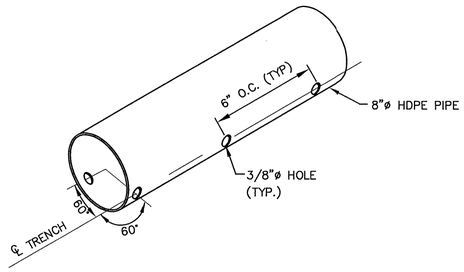

NOTES:

1. CONTRACTOR SHALL PLACE PERFORATED PIPE AS SHOWN (HOLES TOWARDS BOTTOM OF TRENCH).
2. PIPE SHALL HAVE SIX PERFORATIONS FOR EVERY ONE FOOT OF PIPE.

COLLECTION/DETECTION PIPE PERFORATION DETAIL (2 | 12|12)

NOT TO SCALE

12, 13

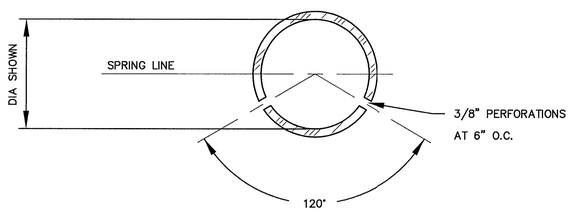

FIELD PIPE PERFORATION

FIELD PERF. PIPE DETAIL (3 | 12|12)

NOT TO SCALE

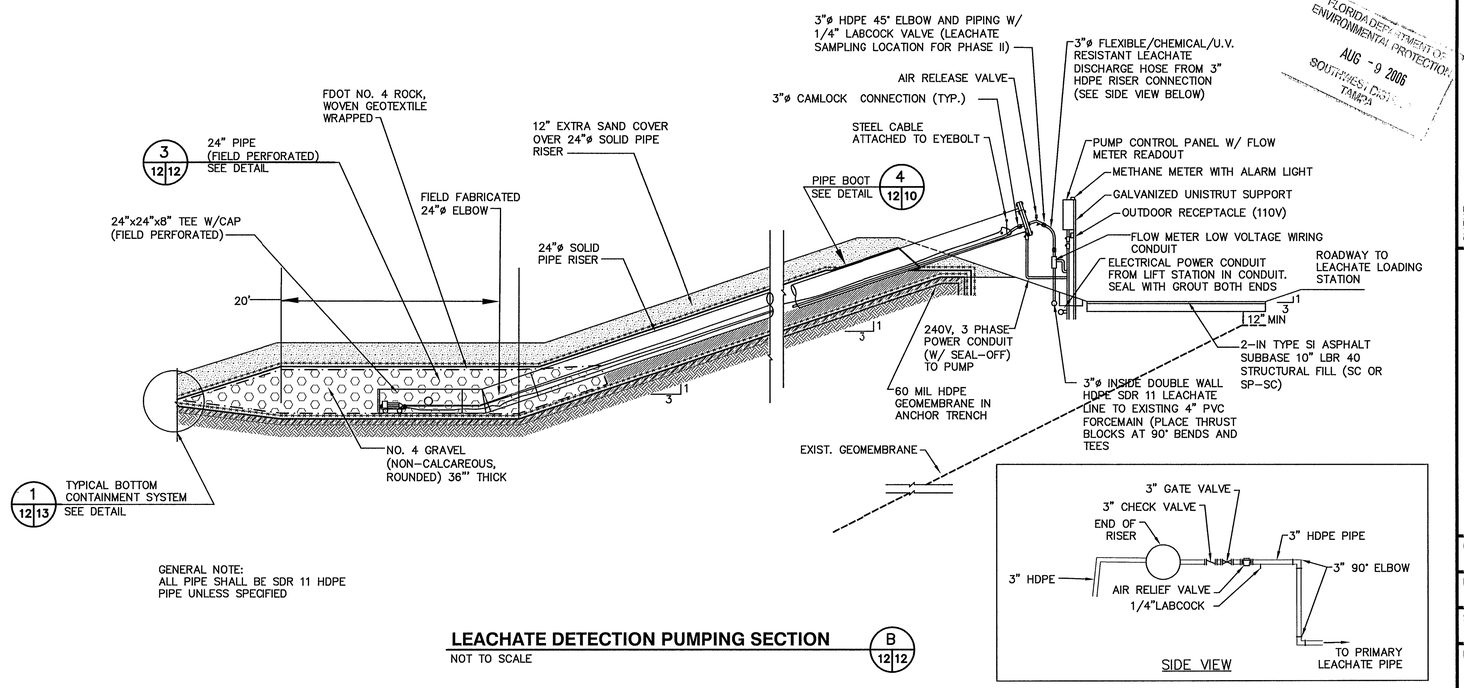

GENERAL NOTE:
ALL PIPE SHALL BE SDR 11 HDPE PIPE UNLESS SPECIFIED

LEACHATE DETECTION PUMPING SECTION (B | 12|12)

NOT TO SCALE

CONFORMED DRAWINGS

DATE: 8/9/2006

FLORIDA DEPARTMENT OF ENVIRONMENTAL PROTECTION AUG - 9 2006 SOUTHWEST DIST. TAMPA

REV.	DATE	DESCRIPTION	CK. BY.
	3/6/06	ISSUED FOR BIDS	
	8/9/06	CONFORMED DRAWINGS	

DRAWING TITLE: DETAILS - 3

PROJECT TITLE: HARDEE COUNTY LANDFILL EXPANSION CONSTRUCTION DRAWINGS

CLIENT: HARDEE COUNTY BOARD OF COUNTY COMMISSIONERS

SCS ENGINEERS
STEARNS, CONRAD AND SCHMIDT CONSULTING ENGINEERS
3012 U.S. HWY. 301 NORTH, SUITE 700, TAMPA, FL 33619
PH (813) 621-9060 FAX NO. (813) 623-6757
FLORIDA CERTIFICATION OF AUTHORIZATION No. 00000892

PROJECT NO. 09199.03.16 | DWN: SRN/LEK | D/A: SRN/LEK | APP: BK: CEH | CSE: BK: JHO/LEK | CHK: BK: SRN/LEK

CADD FILE: 993316DETL1

DATE: MARCH 2006

SCALE: AS SHOWN

DRAWING NO. 12 of 16

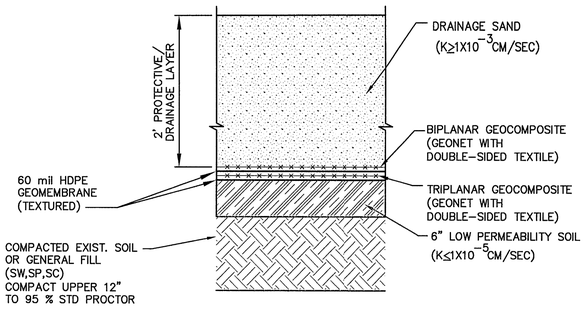

BOTTOM LINER SYSTEM DETAIL (1 | 13)

NOT TO SCALE

12,13

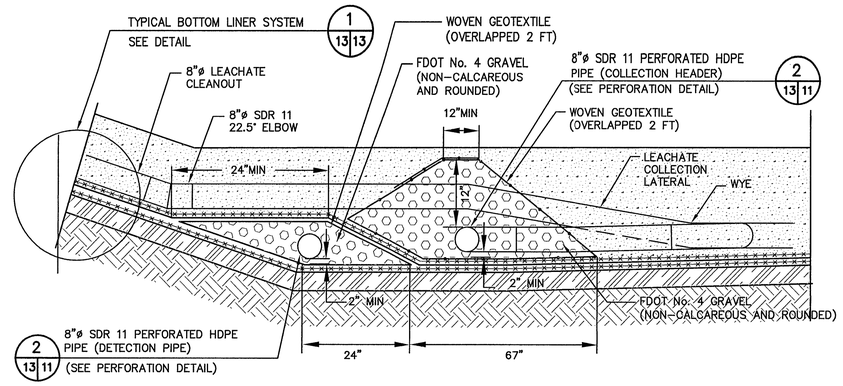

EAST SIDESLOPE COLLECTION/DETECTION TRENCH DETAIL WITH CLEANOUT (2 | 7 | 13)

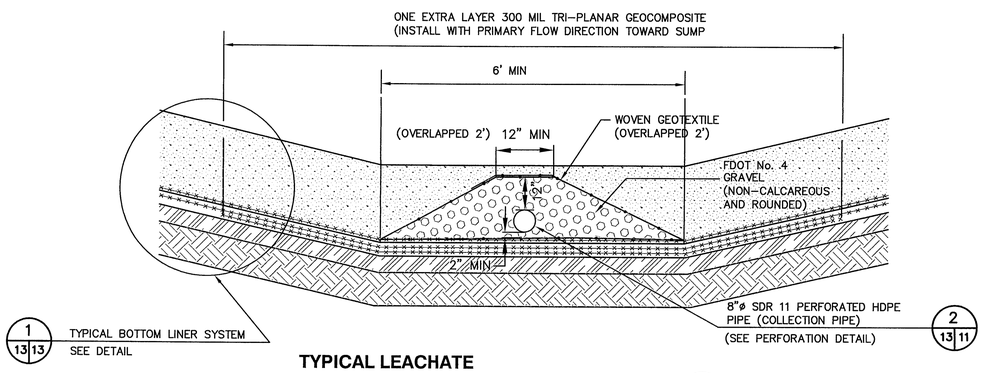

TYPICAL LEACHATE COLLECTION/DETECTION TRENCH DETAIL (3 | 7 | 13)

NOT TO SCALE

NOT TO SCALE

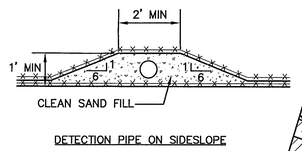

DETECTION PIPE ON SIDESLOPE

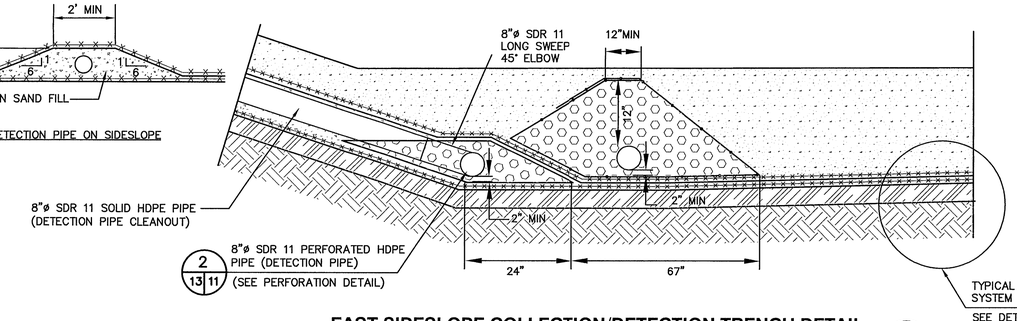

EAST SIDESLOPE COLLECTION/DETECTION TRENCH DETAIL (4 | 7 | 13)

NOT TO SCALE

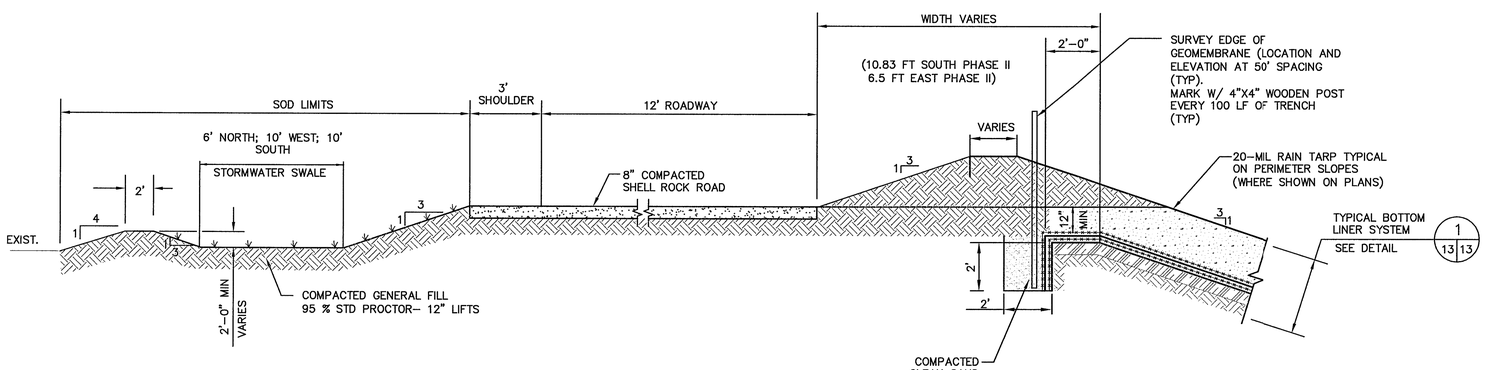

TYPICAL LINER TERMINATION DETAIL (5 | 7 | 12)

NOT TO SCALE

CONFORMED DRAWINGS

DATE: 8/9/2006

FLORIDA DEPARTMENT OF ENVIRONMENTAL PROTECTION
AUG - 9 2006
TAMPA

REV	DATE	DESCRIPTION	BY
1	3/6/06	ISSUED FOR BIDS	
2	8/9/06	CONFORMED DRAWINGS	
3			
4			
5			
6			

SHANE R. FEGLEY, P.E.
CERTIFICATE NO. 58026

DRAWING TITLE: DETAILS - 4

PROJECT TITLE: HARDEE COUNTY LANDFILL EXPANSION CONSTRUCTION DRAWINGS

CLIENT: HARDEE COUNTY BOARD OF COUNTY COMMISSIONERS

SCS ENGINEERS
STEARNS, CONRAD AND SCHMIDT
CONSULTING ENGINEERS
3012 US HWY. 301 NORTH, SUITE 700, TAMPA, FL 33619
PH (813) 621-0080 FAX NO. (813) 622-6757
FLORIDA CERTIFICATE OF AUTHORIZATION NO. 00004892

PROJ. NO. 09199033.16 | DWN. BY: LEK/JHO | CHK. BY: SRN/LEK | DWN. BY: SRN/LEK | CHK. BY: SRN/LEK | APP. BY: CEH

CADD FILE: 993316DETL5

DATE: MARCH 2006

SCALE: NOT TO SCALE

DRAWING NO. 13 of 16

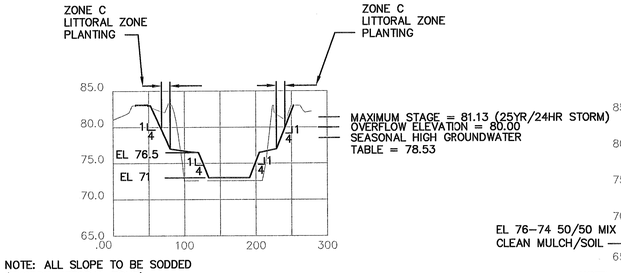

NOTE: ALL SLOPE TO BE SODDED
(EXCEPT LITTORAL ZONE)

SECTION A–A (A 6|14)
SCALE: H = 1" = 100'
V = 1" = 10'

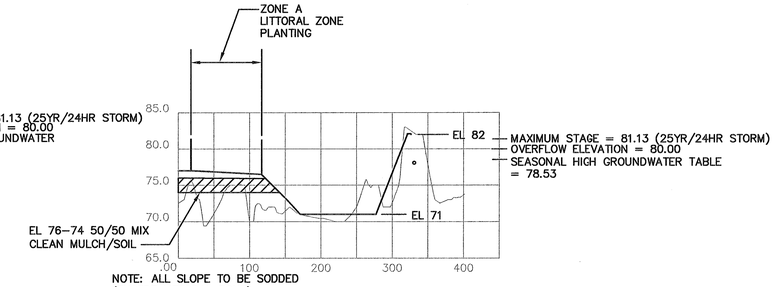

NOTE: ALL SLOPE TO BE SODDED
(EXCEPT LITTORAL ZONE)

SECTION B–B (B 6|14)
SCALE: H = 1" = 100'
V = 1" = 10'

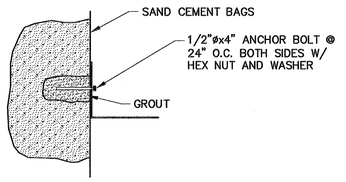

ANCHOR BOLT DETAIL

NOTES:

1. ALUMINUM WEIR TO BE BOLTED INTO SAND CEMENT BAGS. SEE ANCHOR BOLT DETAIL.
2. BOLT HOLES SHALL BE DRILLED TO INSURE THE SAND CEMENT STRUCTURE REMAINS INTACT.

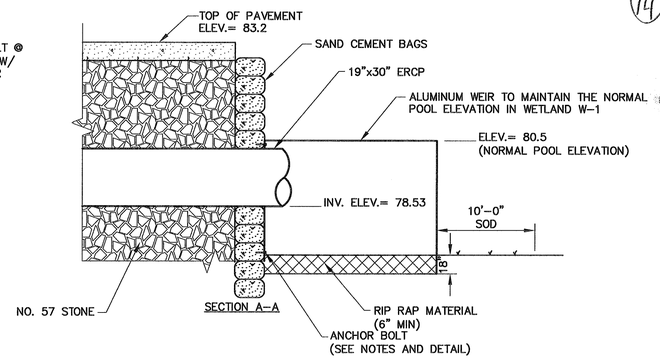

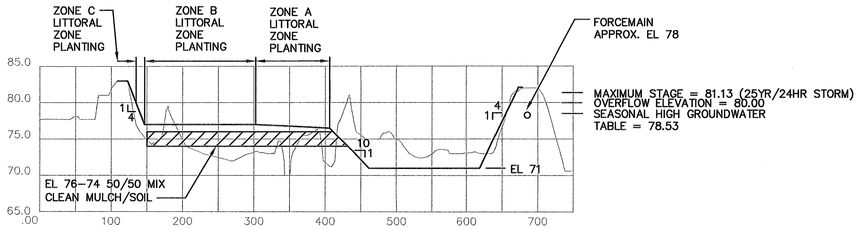

NOTE: ALL SLOPE TO BE SODDED
(EXCEPT LITTORAL ZONE)

SECTION C–C (C 6|14)
SCALE: H = 1" = 100'
V = 1" = 10'

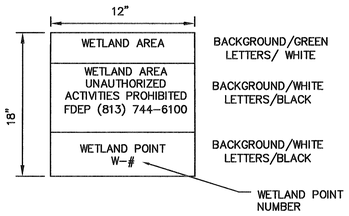

TYP. WETLAND DELINATION SIGN DETAIL (2 | 14)

NOTE: PERMANENT SIGNS SHALL CONSIST OF 3/4–INCH DIAMETER ALUMINUM POSTS, DRIVEN TO 30–INCHES INTO THE GROUND AND EXTENDING 3 FEET ABOVE THE GROUND WITH A HIGHLY VISIBLE ALUMINUM SIGN (12"X18") BOLTED TO THE POST. POST SIGNS AT THE POINTS IDENTIFIED ON THE PLANS. SEE SHEET 4 FOR SIGN LOCATIONS. 4,5,9

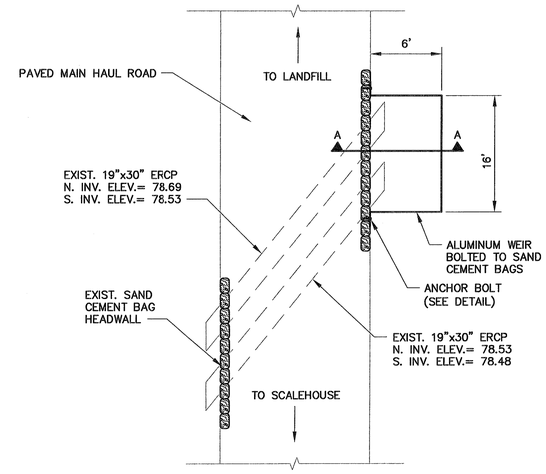

WETLAND WEIR (1 | 8|14)
NOT TO SCALE

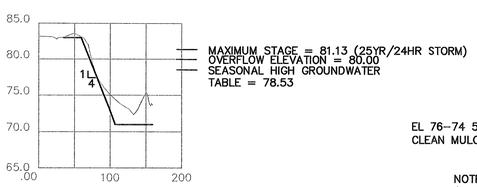

NOTE: ALL SLOPE TO BE SODDED
(EXCEPT LITTORAL ZONE)

SECTION D–D (D 6|14)
SCALE: H = 1" = 100'
V = 1" = 10'

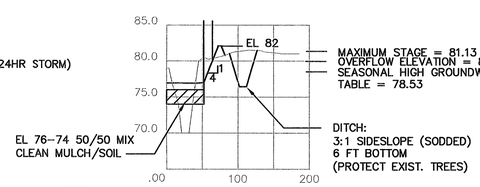

NOTE: ALL SLOPE TO BE SODDED
(EXCEPT LITTORAL ZONE)

SECTION E–E (E 6|14)
SCALE: H = 1" = 100'
V = 1" = 10'

WETLAND CROSS-SECTIONS

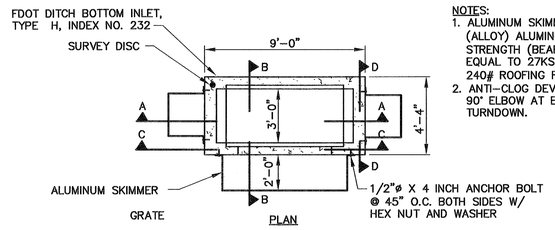

PLAN

NOTES:

1. ALUMINUM SKIMMER COMPOSED OF 5052–H32 (ALLOY) ALUMINUM PLATE W/ RATED YIELD STRENGTH (BEARING) GREATER THAN OR EQUAL TO 27KSI PLACED ON ONE LAYER OF 240# ROOFING FELT (6'Lx3'H)
2. ANTI–CLOG DEVICE – PLACE 3" PVC SCH 40 90° ELBOW AT END OF ALL BLEEDER HOLES; TURNDOWN.

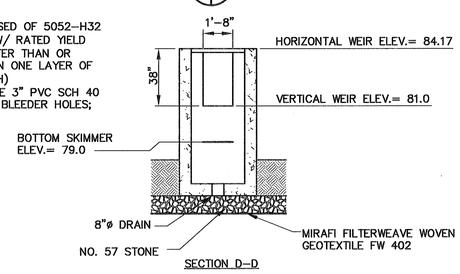

SECTION D–D

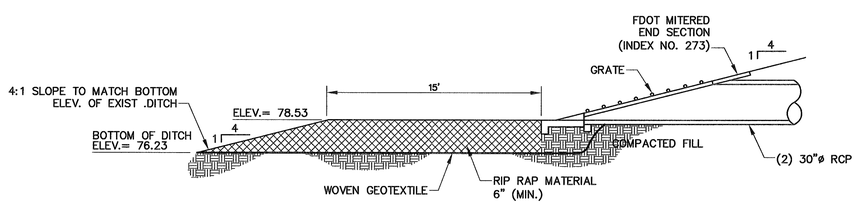

OFFSITE DISCHARGE PIPES (3 | 6|14)
NOT TO SCALE

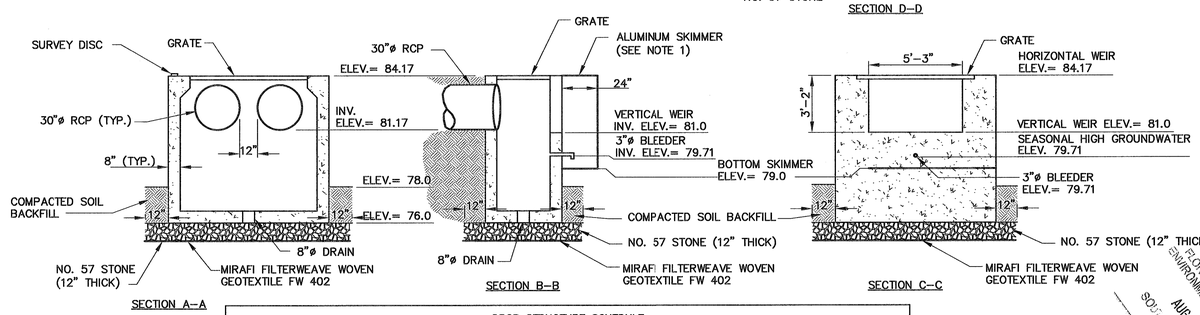

WETLAND DISCHARGE STRUCTURE DETAIL (4 | 7|14)
NOT TO SCALE

DROP STRUCTURE SCHEDULE											
Location	Discharge Pipe Invert	Discharge Pipe Diameter (inches)	No. of Discharge Pipes	horizontal Weir Invert	Horizontal Weir Dimensions	Vertical Weir Invert	Vertical Weir Dimensions	No. of Vertical Weirs	Bleeder Elevation	Bleeder Diameter (inches)	No. of Bleeders
Primary Pond	81.17	30	2	84.17	79"x36"	81	63"x38"	1	79.71	3	1
						81	20"x38"	2			
Borrow Pit	78.53	30	2	81.00	79"x36"	80	63"x12"	1	78.53	3	4
						80	20"x12"				

THE DROP STRUCTURES ARE FDOT DITCH BOTTOM INLETS, TYPE H, INDEX NO. 232

CONFORMED DRAWINGS
DATE: 8/9/2006

FLORIDA DEPARTMENT OF ENVIRONMENTAL PROTECTION
AUG - 9 2006
SOUTHWEST DISTRICT
TAMPA

(14)

REV	DATE	DESCRIPTION	BY
	3/6/06	ISSUED FOR BIDS	
	8/9/06	CONFORMED DRAWINGS	

DRAWING TITLE: DETAILS - 5

PROJECT TITLE: HARDEE COUNTY LANDFILL EXPANSION CONSTRUCTION PERMIT

CLIENT: HARDEE COUNTY BOARD OF COUNTY COMMISSIONERS

SCS ENGINEERS
STEARNS, CONRAD AND SCHMIDT
CONSULTING ENGINEERS
3012 U.S. HWY. 301 NORTH, SUITE 700, TAMPA, FL 33619
PH: 813-621-1284 FAX: 813-621-6257
FLORIDA CERTIFICATE OF AUTHORIZATION NO. 00004892

PROJ. NO: 091990033.16 | DWN: SDA/JHO | QA: SRN/LEK | APP: BY: CEH
DSN: BY: JHO/LEK | CHK: BY: SRN/LEK

CADD FILE: 993316XSEC
DATE: MARCH 2006
SCALE: AS SHOWN
DRAWING NO. 14 of 16

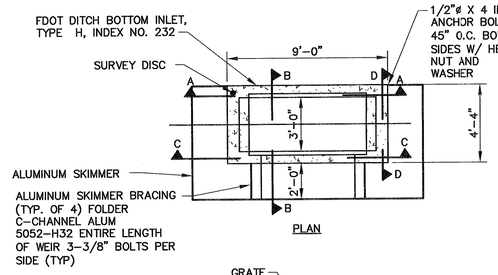

PLAN

NOTES:

1. 8" THICK HEADWALL TO CONTAIN 2 ROWS OF #4 REBAR 12" O.C. EACH WAY.
2. ALUMINUM SKIMMER COMPOSED OF 5052-H32 (ALLOY) ALUMINUM PLATE W/ RATED YIELD STRENGTH (BEARING) GREATER THAN OR EQUAL TO 27KSI PLACED ON ONE LAYER OF 240# ROOFING FELT (6'Lx3'H). ALUMINUM SKIMMER WILL BE ATTACHED TO DROP STRUCTURE AT ELEVATION 80.75
3. ANTI-CLOG DEVICE – PLACE 3" ø PVC SCH 40 90° ELBOW AT END OF ALL BLEEDER HOLES; TURNDOWN.

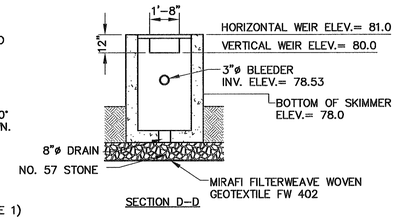

SECTION D–D

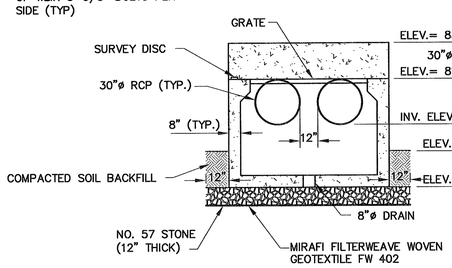

SECTION A–A

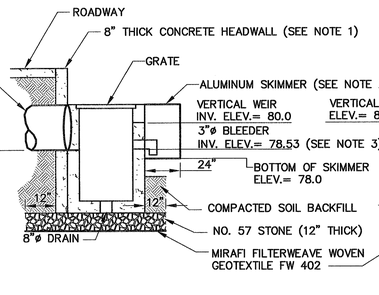

SECTION B–B

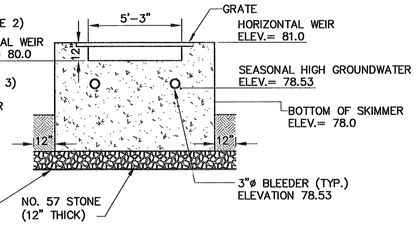

SECTION C–C

OFF-SITE DISCHARGE STRUCTURE DETAIL (1 / 6 15)

NOT TO SCALE

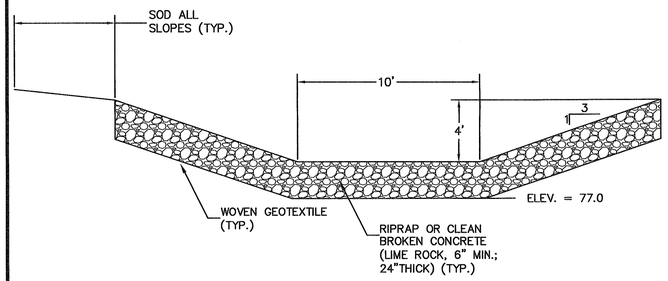

RIPRAP CHANNEL DETAIL (3 / 6 15)

NOT TO SCALE

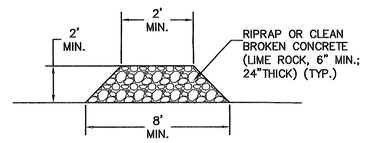

ROCK CHECKDAM DETAIL (4 / 6 15)

NOT TO SCALE

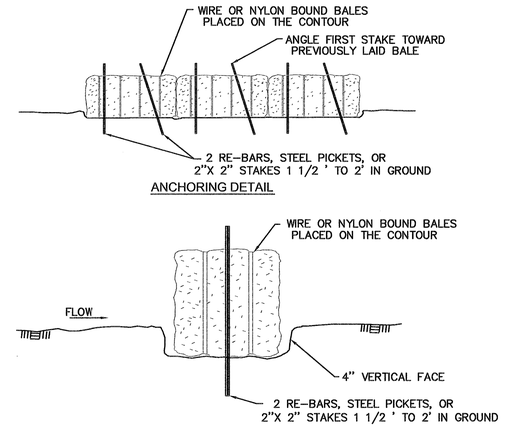

HAYBALE EMBEDDING DETAIL (TEMPORARY)

REPLACE UNTIL SOD ESTABLISHED (2 MONTHS MIN AFTER WORK COMPLETED)

GENERAL NOTES:

1. EACH BALE SHALL BE EMBEDDED IN THE SOIL A MINIMUM OF FOUR INCHES.
2. BALES SHALL BE SECURELY ANCHORED IN PLACE BY 3/8 INCH REBAR STAKES DRIVEN THROUGH THE BALES. THE FIRST STAKE IN EACH BALE SHALL BE ANGLED TOWARD PREVIOUSLY LAID BALE TO FORCE BALES TOGETHER.
3. INSPECTION SHALL BE WEEKLY OR AFTER EACH RAINFALL EVENT AND REPAIR OR REPLACEMENT SHALL BE MADE PROMPTLY AS NEEDED BY THE CONTRACTOR.
4. WHEN SILT REACHES A DEPTH OF 6 INCHES, IT SHALL BE REMOVED AND DISPOSED OF IN AN APPROVED SITE AS TO NOT CREATE A SILTATION PROBLEM.
5. AFTER THE DEVELOPMENT SITE IS COMPLETELY STABILIZED, THE BALE AND ACCUMULATED SILT SHALL BE REMOVED AND DISPOSED OF AT AN APPROVED SPOIL DISPOSAL SITE.

HAYBALE EMBEDDING DETAIL (2 / 9,15 15)

NOT TO SCALE

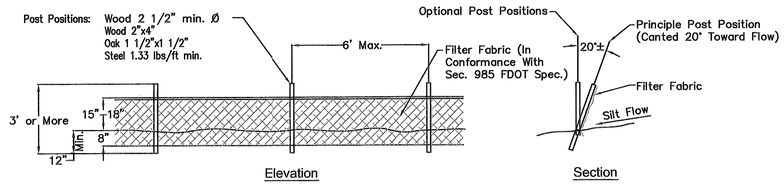

Type III Silt Fence (TEMPORARY)

REPLACE UNTIL SOD ESTABLISHED (2 MONTHS MIN AFTER WORK COMPLETED)

GENERAL NOTES:

1. POSTS WHICH SUPPORT THE SILT FENCE SHALL BE INSTALLED ON A SLIGHT ANGLE TOWARD THE ANTICIPATED RUNOFF SOURCE. POST MUST BE EMBEDDED A MINIMUM OF ONE FOOT.
2. THE TOE OF THE SILT FENCE SHALL BE TRENCHED IN WITH A SPADE OR MECHANICAL TRENCHER, SO THAT THE DOWNSLOPE FACE OF THE TRENCH IS FLAT AND PERPENDICULAR TO THE LINE OF FLOW. WHERE FENCE CAN NOT BE TRENCHED IN (E.G. PAVEMENT) WEIGHT FABRIC FLAP WITH WASHED GRAVEL ON UPHILL SIDE TO PREVENT FLOW UNDER FENCE.
3. THE TRENCH MUST BE A MINIMUM OF 6 INCHES DEEP AND 6 INCHES WIDE TO ALLOW FOR THE SILT FENCE FABRIC TO BE LAID IN THE GROUND AND BACKFILLED WITH COMPACTED MATERIAL.
4. SILT FENCE SHOULD BE SECURELY FASTENED TO EACH STEEL SUPPORT POST OR TO WOVEN WIRE, WHICH IS IN TURN ATTACHED TO THE STEEL FENCE POST.
5. INSPECTION SHALL BE MADE WEEKLY OR AFTER EACH RAINFALL EVENT AND REPAIR OR REPLACEMENT SHALL BE MADE PROMPTLY AS NEEDED.
6. SILT FENCE SHALL BE REMOVED WHEN THE SITE IS COMPLETELY STABILIZED SO AS NOT TO BLOCK OR IMPEDE STORM FLOW OR DRAINAGE.
7. ACCUMULATED SILT SHALL BE REMOVED WHEN IT REACHES A DEPTH OF 6 INCHES. THE SILT SHALL BE DISPOSED OF IN AN APPROVED SITE AND IN SUCH A MANNER AS TO NOT CONTRIBUTE TO ADDITIONAL SILTATION.

SILT FENCE (7 / 9 15)

NOT TO SCALE

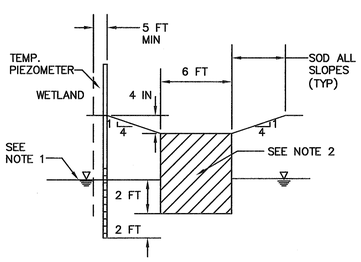

NOTES:

1) MONITOR WATER LEVELS (DAILY) DURING DEWATERING ACTIVITIES USING TEMPORARY PIEZOMETERS; WATER LEVELS NOT TO VARY FROM PRE-CONSTRUCTION LEVELS; IF LEVELS VARY MORE THAN 12 INCHES RECHARGE SWALE UNTIL LEVELS RISE.

2) BACKFILL W/CLEAN FILL UPON COMPLETION OF DEWATERING ACTIVITIES

GRASS RECHARGE /TREATMENT SWALE DETAIL (5 / 6,9 15)

NOT TO SCALE

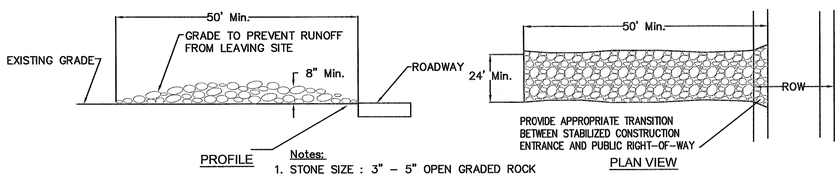

Notes:

1. STONE SIZE : 3" – 5" OPEN GRADED ROCK
2. LENGTH: AS EFFECTIVE BUT NOT LESS THAN 50 FEET.
3. THICKNESS : NOT LESS THAN 8 INCHES.
4. WIDTH: NOT LESS THAN FULL WIDTH OF ALL POINTS OF INGRESS/ EGRESS.
5. WASHING: WHEN NECESSARY, WHEELS SHALL BE CLEANED TO REMOVE SEDIMENT PRIOR TO ENTRANCE ONTO PUBLICK ROADWAY. WHEN WASHING IS REQUIRED, IT SHALL BE DONE ON AN AREA STABILIZED WITH CRUSHED STONE WHICH DRAINS INTO AN APPROVED TRAP OR SEDIMENT BASIN. ALL SEDIMENT SHALL BE PREVENTED FROM ENTERING ANY STORM DRAIN, DITCH OR WATERCOURSE USING APPROVED METHODS.
6. MAINTENANCE: THE ENTRANCE SHALL BE MAINTAINED IN A CONDITION WHICH WILL PREVENT TRACKING OR FLOWING OF SEDIMENT ONTO PUBLIC ROADWAY. THIS MAY REQUIRE PERIODIC TOP DRESSING WITH ADDITIONAL STONE CONDITIONS DEMAND, AND REPAIR AND CLEAN OUT OF ANY MEASURES USED TO TRAP SEDIMENT. ALL SEDIMENT SPILLED, DROPPED, WASHED OR TRACKED ONTO PUBLIC ROADWAY MUST BE REMOVED IMMEDIATELY.
7. DRAINAGE: ENTRANCE MUST BE PROPERLY GRADED OR INCORPORATE A DRAINAGE SWALE TO PREVENT RUNOFF FROM LEAVING THE CONSTRUCTION SITE.

TYPICAL CONSTRUCTION ENTRANCE (6 / 9 15)

NOT TO SCALE

CONFORMED DRAWINGS

DATE: 8/9/2006

FLORIDA DEPARTMENT OF ENVIRONMENTAL PROTECTION
AUG - 9 2006
SOUTHWEST DISTRICT
TAMPA

REV	DATE	DESCRIPTION	BY
	3/6/06	ISSUED FOR BIDS	
	8/9/06	CONFORMED DRAWINGS	

DRAWING TITLE: DETAILS - 5

PROJECT TITLE: HARDEE COUNTY LANDFILL EXPANSION CONSTRUCTION DRAWINGS

CLIENT: HARDEE COUNTY BOARD OF COUNTY COMMISSIONERS

SCS ENGINEERS
STEARNS, CONRAD AND SCHMIDT CONSULTING ENGINEERS
3012 U.S. HWY. 301 NORTH, SUITE 700, TAMPA, FL 33619
PH (813) 621-0080 FAX NO. (813) 623-6757
FLORIDA CERTIFICATE OF AUTHORIZATION NO. 00004892

PROJ. NO. 0399033.16 | DWN: BS | CHK: SRN/LEK | Q/A REVIEW BY: SRN/LEK | APP: BY: JHO/LEK | APP: BY: CEH

CADD FILE: 993316DETL3

DATE: MARCH 2006

SCALE: AS SHOWN

DRAWING NO. 15 of 16

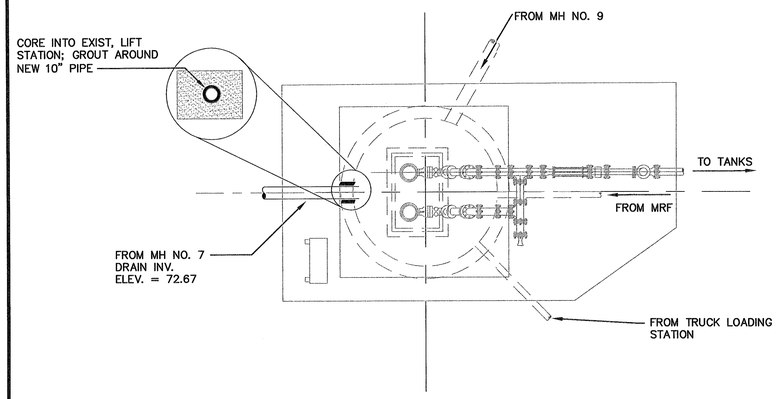

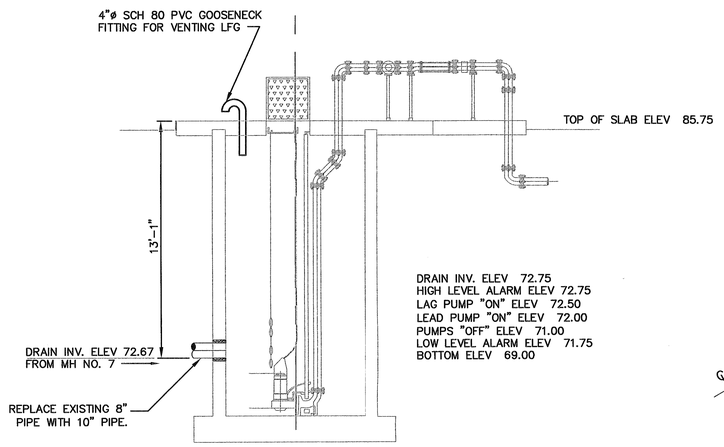

TYPICAL LIFT STATION CONNECTIONS DETAIL (1 / 7 16)

SCALE: 1"=4'

NOTES:
1) CONTRACTOR TO PROVIDE HEALTH AND SAFETY PLAN PRIOR TO WORK.

2) COMPLY WITH ALL STATE, LOCAL, FEDERAL LAWS FOR EXCAVATION AND CONFINED SPACE ENTRY.

3) LIFT STATION AND PUMP DESIGN BY OTHERS.

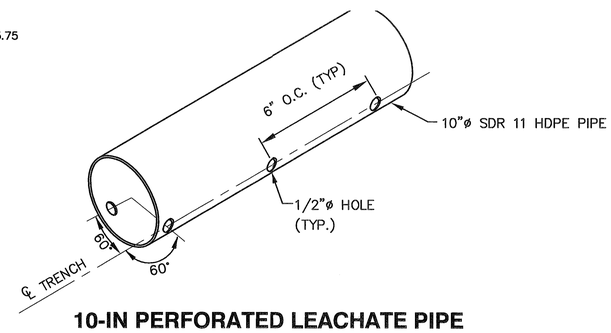

10-IN PERFORATED LEACHATE PIPE DETAIL (3 / 16 16)

NOT TO SCALE

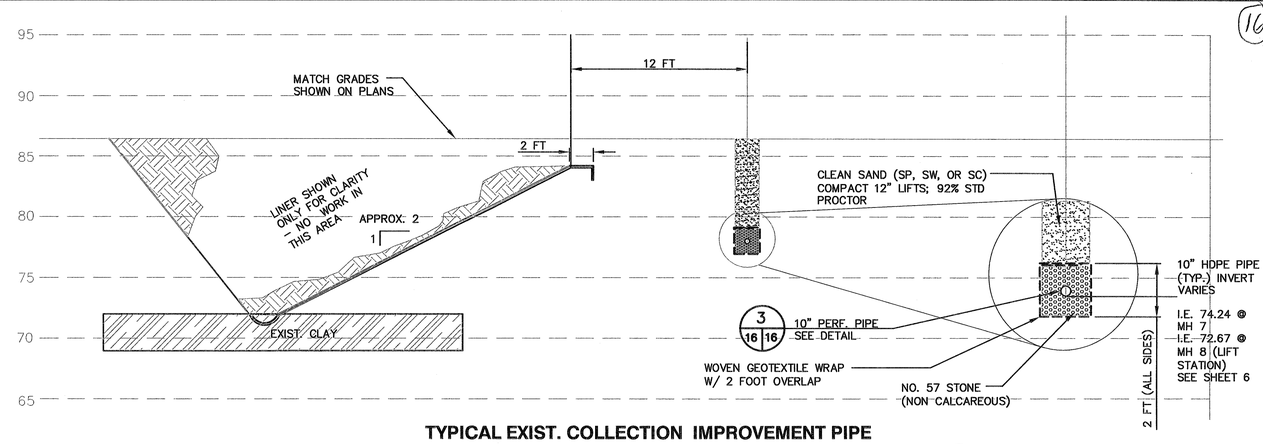

TYPICAL EXIST. COLLECTION IMPROVEMENT PIPE INSTALLATION DETAIL (2 / 7 16)

SCALE: NTS

NOTE:

1) CONTRACTOR TO SELECT METHOD OF EXCAVATION (TRENCHBOX, BRACED EXCAVATION, ETC.) AND PROVIDE HEALTH AND SAFETY PLAN PRIOR TO WORK.

2) COMPLY WITH ALL STATE, LOCAL, FEDERAL LAWS FOR EXCAVATION AND CONFINED SPACE ENTRY

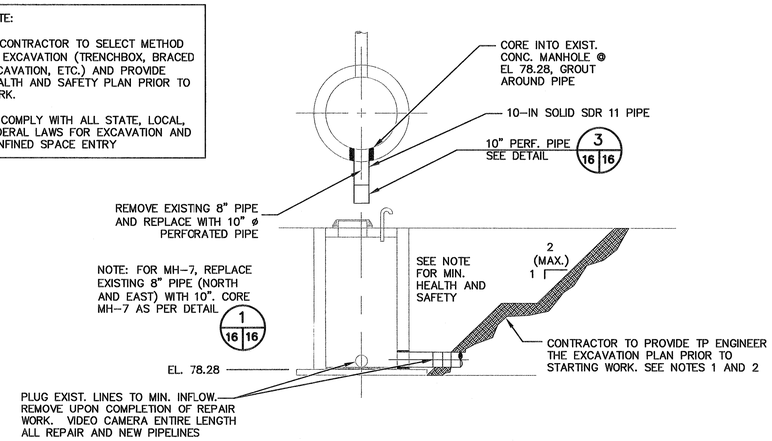

TYPICAL EXIST. MANHOLE NO. 6 CONNECTION DETAIL (4 / 7 16)

SCALE: 1"=4'

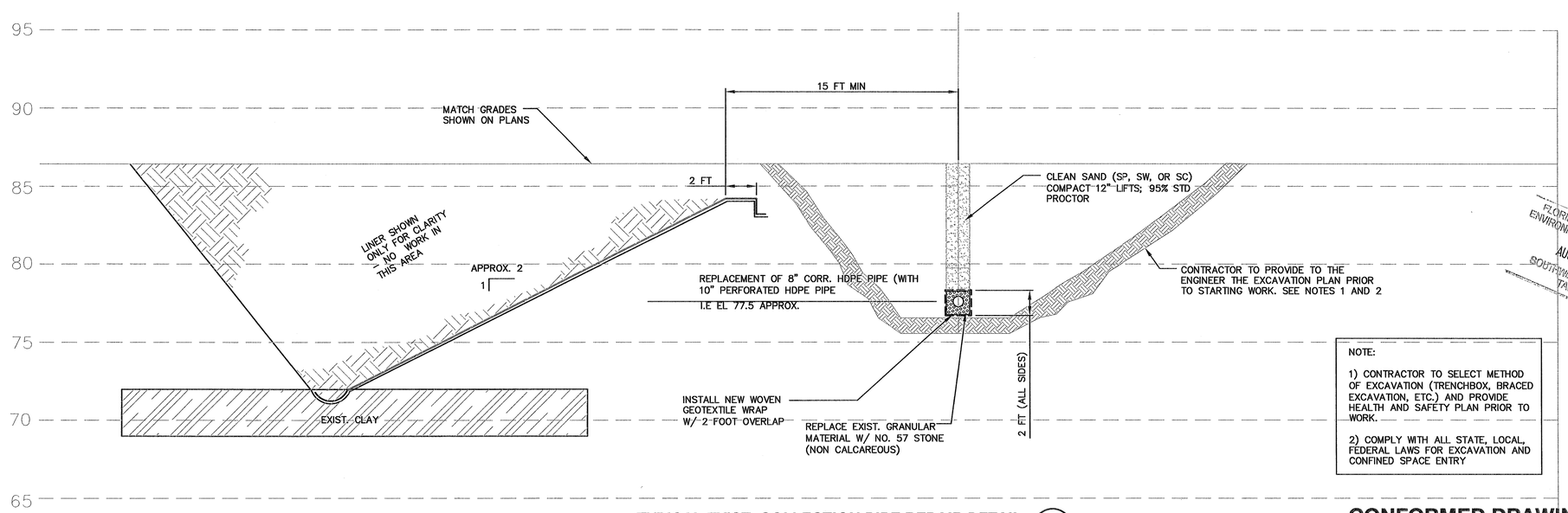

NOTE:

1) CONTRACTOR TO SELECT METHOD OF EXCAVATION (TRENCHBOX, BRACED EXCAVATION, ETC.) AND PROVIDE HEALTH AND SAFETY PLAN PRIOR TO WORK.

2) COMPLY WITH ALL STATE, LOCAL, FEDERAL LAWS FOR EXCAVATION AND CONFINED SPACE ENTRY

TYPICAL EXIST. COLLECTION PIPE REPAIR DETAIL (5 / 7 16)

SCALE: 1"=4'

FLORIDA DEPARTMENT OF ENVIRONMENTAL PROTECTION
AUG - 9 2006
SOUTHWEST DISTRICT
TAMPA

CONFORMED DRAWINGS

DATE: 8/9/2006

16

REV	DATE	DESCRIPTION	BY
	3/6/06	ISSUED FOR BIDS	
	8/9/06	CONFORMED DRAWINGS	

DRAWING TITLE: DETAILS - 6

PROJECT TITLE: HARDEE COUNTY LANDFILL EXPANSION CONSTRUCTION DRAWINGS

CLIENT: HARDEE COUNTY BOARD OF COUNTY COMMISSIONERS

SCS ENGINEERS
STEARNS, CONRAD AND SCHMIDT CONSULTING ENGINEERS
3012 U.S. HWY. 301 NORTH, SUITE 700, TAMPA, FL 33619
PH (813) 621-0080 FAX NO. (813) 623-6757
FLORIDA CERTIFICATE OF AUTHORIZATION NO. 00004892

PROJECT NO: 0919903.16 | DWN. BY: JHO | Q/A REVIEW BY: SRN/LEK | DSN. BY: LEK/JHO | CHK. BY: SRN/LEK | APP. BY: CEH

CADD FILE: 993309SHT16

DATE: MARCH 2006

SCALE: AS SHOWN

DRAWING NO. 16 of 16