0 2500 5000 10000

GRAPHIC SCALE IN FEET

SCALE: 1"= 5000 FEET

SECTIONS 1-4 - TOWNSHIP 19S - RANGE 18E

CONSTRUCTION PLANS FOR CENTRAL LANDFILL LEACHATE FORCEMAIN

NOTES:

1. ALL CONSTRUCTION COVERED BY THESE PLANS SHALL COMPLY WITH THE MATERIAL REQUIREMENTS AND QUALITY CONTROL STANDARDS CONTAINED IN CITRUS COUNTY LAND DEVELOPMENT CODE.
2. TOPOGRAPHIC INFORMATION REPRESENTED ON THESE PLANS IS FROM MULTIPLE SOURCES. THE TOPO SHOWN IS FOR INFORMATIONAL PURPOSES ONLY. WHERE PROVIDED BY THE SURVEYOR, BENCHMARKS HAVE BEEN SHOWN.
3. THE FOLLOWING ARE ABBREVIATIONS AS USED IN THESE CONSTRUCTION PLANS:

A.C.C.M.P.A.	=	ASPHALT COATED CORRUGATED METAL PIPE ARCH
A.C.C.M.P.	=	ASPHALT COATED CORRUGATED METAL PIPE
TYP.	=	TYPICAL
R	=	RADIUS
STA.	=	STATION
INV.	=	INVERT
ELEV.	=	ELEVATION
R/W	=	RIGHT-OF-WAY
HORIZ.	=	HORIZONTAL
VERT.	=	VERTICAL
V.C.	=	VERTICAL CURVE
P.V.I.	=	POINT OF VERTICAL INTERSECTION
P.R.C.	=	POINT OF REVERSE CURVATURE
LT.	=	LEFT
RT.	=	RIGHT
P.I.	=	POINT OF INTERSECTION
P.C.	=	POINT OF CURVATURE
P.T.	=	POINT OF TANGENCY
INT.	=	INTERSECTION
SMH.	=	STORM MANHOLE

4. CONTRACTOR SHALL IMMEDIATELY CONTACT PROJECT ENGINEER, BURRELL ENGINEERING, INC. IF PLANS ARE UNCLEAR, REQUIRING INTERPRETATION OR CONFLICTING INFORMATION IS DISCOVERED.
5. SOD ALL DISTURBED AREAS WITHIN THE PROJECT UNLESS OTHERWISE NOTED.
6. IF PREHISTORIC OR HISTORIC ARTIFACTS, SUCH AS POTTERY OR CERAMICS, STONE TOOLS, OR METAL IMPLEMENTS, DUGOUT CANOES, OR ANY OTHER PHYSICAL REMAINS THAT COULD BE ASSOCIATED WITH NATIVE AMERICAN CULTURES, OR EARLY COLONIAL OR AMERICAN SETTLEMENT ARE ENCOUNTERED WITHIN THE PROJECT AREA, THE CONTRACTOR SHALL CEASE ALL CONSTRUCTION ACTIVITIES IN THE IMMEDIATE VICINITY OF SUCH DISCOVERIES AND CONTACT THE OWNER OR HIS REPRESENTATIVE AS SOON AS POSSIBLE. WORK IN THE AFFECTED AREA SHALL NOT RESUME UNTIL THE CONTRACTOR IS AUTHORIZED TO PROCEED BY THE OWNER. IN THE EVENT THAT UNMARKED HUMAN REMAINS ARE ENCOUNTERED DURING CONTRUCTION. ALL WORK SHALL STOP AND THE CONTRACTOR SHALL IMMEDIATELY NOTIFY THE OWNER OF THE DISCOVERY.
7. ALL STREET, DRIVEWAY AND PAVEMENT CROSSINGS TO BE DIRECTIONAL BORE. OPEN CUT WILL NOT BE ALLOWED.

BEI BURRELL ENGINEERING, INC. CIVIL ENGINEERING

FDOT General Notes:

ALL WORK PERFORMED IN THE FDOT RIGHT OF WAY SHALL BE DONE IN ACCORDANCE WITH THE MOST CURRENT EDITIONS OF:

a. F.D.O.T. STANDARD SPECIFICATIONS FOR ROAD AND BRIDGE CONSTRUCTION.
b. F.D.O.T. DESIGN STANDARDS FOR DESIGN, CONSTRUCTION, MAINTENANCE AND UTILITY OPERATIONS ON THE STATE HIGHWAY SYSTEM.
c. F.D.O.T. ROADWAY PLANS PREPARATION MANUAL VOLUME I, CHAPTER 2 AND/OR 25.
d. F.D.O.T. FLEXIBLE PAVEMENT DESIGN MANUAL FOR NEW CONSTRUCTION AND PAVEMENT REHABILITATION.

1. ALL AREAS IN THE F.D.O.T. RIGHT OF WAY DISTURBED DURING CONSTRUCTION SHALL BE RESTORED, COMPACTED, SODDED AND WATERED IN CONFORMANCE WITH THE F.D.O.T. STANDARD SPECIFICATIONS FOR ROAD AND BRIDGE CONSTRUCTION, SECTION 575 AND 981 AND DESIGN STANDARDS INDEX 105.
2. DAYTIME WORK ONLY. THE F.D.O.T. ENGINEER MUST APPROVE NIGHT WORK AND LANE CLOSURES AT LEAST 48 HOURS IN ADVANCE. THE APPLICANT MUST NOTIFY THE FLORIDA DEPARTMENT OF TRANSPORTATION LOCAL MAINTENANCE OFFICE 48 HOURS IN ADVANCE OF STARTING ANY PROPOSED WORK. CALL BROOKSVILLE MAINTENANCE, JOHN KILKENNY AT 352-797-5700.
3. ALL TRAFFIC STRIPES AND PAVEMENT MARKINGS ARE TO BE LEAD-FREE, NON-SOLVENT BASED THERMOPLASTIC. THE PERMITTEE SHALL FURNISH THE DEPARTMENT WITH THE MANUFACTURER'S CERTIFICATION THAT THE THERMOPLASTIC ID "LEAD FREE". REMOVAL OF EXISTING STRIPING SHALL BE DONE BY MILLING AND RESURFACING OF THE FRICTION/SURFACE COURSE TO OBLITERATE OBSOLETE PAVEMENT MARKINGS.
4. ALL PROPOSED TRAFFIC SIGNS AND PAVEMENT MARKINGS SHALL BE IN CONFORMANCE WITH AND CONSTRUCTED TO THE F.D.O.T. DESIGN STANDARDS INDEX SERIES 11000, 17000, 17302, 9535, AND 11800 SERIES. THE PROPERTY OWNER MUST MAINTAIN THE DRIVEWAY TRAFFIC SIGNS AND MARKINGS.
5. THE F.D.O.T. REQUIRES DOCUMENTATION FOR SUCCESSFUL COMPLETION OF AN APPROVED WORK ZONE TRAFFIC CONTROL TRAINING COURSE FOR THE AGENCY, UTILITY, OR CONTRACTOR EMPLOYEE(S) INSTALLING AND/OR MAINTAINING THE APPROVED MAINTENANCE OF TRAFFIC PLAN. DOCUMENTATION IS TO BE FURNISHED TO THE DEPARTMENT AT THE PRE-CONSTRUCTION MEETING OR BEFORE OCCUPYING STATE RIGHT-OF-WAY.
6. MAINTENANCE OF TRAFFIC PLAN FOR WORK ZONES SHALL BE IN CONFORMANCE WITH ALL APPLICABLE INDICES OF THE FDOT DESIGN STANDARDS INDEX 600 SERIES ACCORDING TO THE TYPE OF ROADWAY AND TYPE OF WORK BEING PERFORMED.
7. **SIDEWALK SHALL BE CONSTRUCTED PER FDOT INDEX 304 AND 310. DETECTABLE WARNING STRIPS, A.K.A. TRUNCATED DOMES, FOR DISTRICT SEVEN CONSTRUCTION AND MAINTENANCE SHOULD BE EITHER INSET CERAMIC TILES OR THERMOPLASTIC BY THE FOLLOWING VENDORS/MANUFACTURERS.

a. INLINE TRUNCATED DOME EX TILE SUPPLIED BY PROFESSIONAL PAVEMENT PRODUCTS
b. TOP MARK SUPPLIED BY FLINT TRADING
c. VANGUARD TRUNCATED DOME SUPPLIED BY VANGUARD

**FOR FACILITIES WITH PUBLIC SIDEWALKS WITHIN FDOT RIGHT OF WAY

INDEX:

SHEET NO.	CONTENTS
1	COVER SHEET
2	KEY
3	SITE PLAN
4-41	PLAN AND PROFILE
42-45	DETAILS
46-47	INSTALLATION SPECIFICATIONS
SP 6 & SP 7	CITRUS COUNTY SPECIFICATIONS

PROJECT SUMMARY

LENGTH OF PROJECT:	4.06 MILES
LENGTH OF 6" FORCE MAIN:	1225 LF
LENGTH OF 8" FORCE MAIN:	20,212 LF
ROADWAY STATUS:	PUBLIC
SEWAGE DISPOSAL:	CITRUS COUNTY UTILITIES

OWNER:

CITRUS COUNTY BOARD OF COUNTY COMMISSIONERS
110 N. APOPKA AVE.
INVERNESS, FL 34450

ENGINEER'S CERTIFICATION NOTE:
This certification is provided as confirmation that the site design, roadways, drainage, water and/or sewer facilities depicted on these plans have been designed in accordance with generally accepted engineering practices and the requirements of permitting agencies having jurisdiction over such facilities. It is not intended to certify the accuracy of existing surface features or subsurface conditions, which may have been used for design, but were certified by other professionals.

DRAWN DFS
CHECKED TEB
DRAWING PASE 11-23
LAYOUT 1 COVER
DATE 02-03-12

BURRELL ENGINEERING, INC.
CIVIL ENGINEERING C.A. No. 7973
12005 N. FLORIDA AVE DUNNELLON, FL 34434 PH. 352-489-4144 FAX 352-489-4741

CENTRAL LANDFILL
LEACHATE FORCEMAIN
CITRUS COUNTY, STATE

COVER

NO.	REVISION	DATE
MARK	DESCRIPTION	DATE

TROY E. BURRELL, JR., P.E.
REG. ENGINEER NO. 36044
STATE OF FLORIDA
DATE 4/22/12

JOB NO. 11-23
FILE NO. M-18
SEC1-4TWP19SRGE 18E

DRAWING: \\FILE-SERVER\Civil 3D\Citrus Landfill Leachate Forcemain\Production Drawings\Date 11-22\Dwg

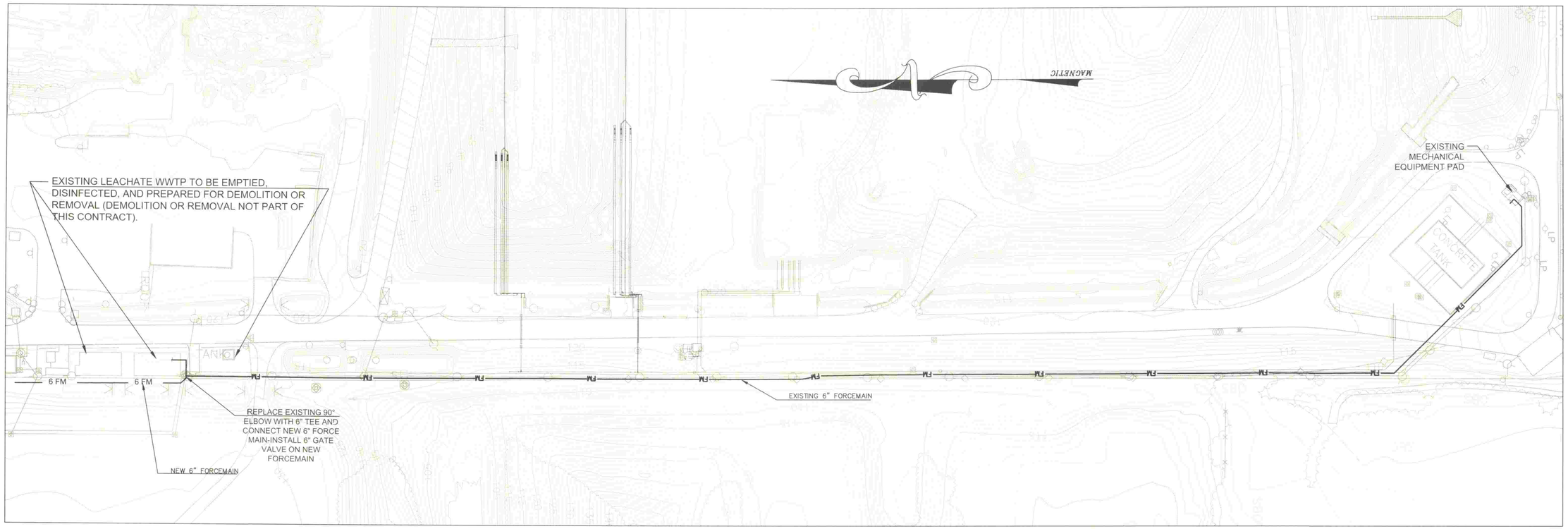

SCALE: 1" = 60'

CENTRAL LANDFILL LEACHATE TREATMENT SYSTEM MODIFICATION PLAN

DRAWN DFS
CHECKED TEB
DRAWING SITE 11-23
LAYOUT 3 SITE
DATE February 12

BURRELL ENGINEERING, INC.
CIVIL ENGINEERING C.A. No. 7973
12005 N. FLORIDA AVE DUNNELLON, FL 34434 PH. 352-489-4144 FAX 352-489-4741

CENTRAL LANDFILL
LEACHATE FORCEMAIN
CITRUS COUNTY, STATE

LEACHATE TREATMENT
SYSTEM MODIFICATION PLAN

NO.	REVISION	DATE
MARK	DESCRIPTION	DATE

TROY E. BURRELL, JR., P.E.
REG. ENGINEER NO. 36044
STATE OF FLORIDA
DATE 4/27/12

JOB NO. 11-23
FILE NO. M-18
SEC 1-4 TWP 19S RGE 18E

DRAWING: \\FILE-SERVER\Civil 3D\Citrus Landfill Leachate Forcemain\Production Drawings\Site 11-23.dwg

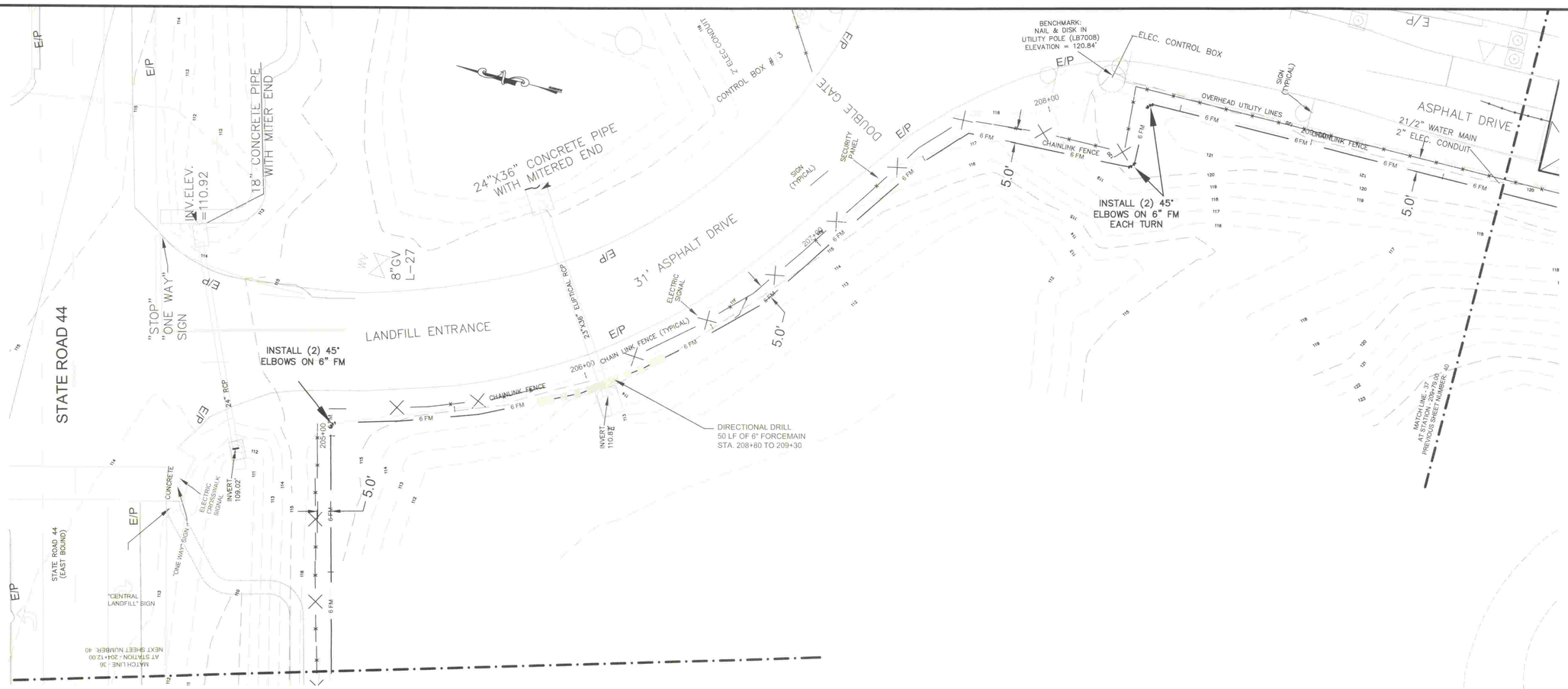

STATION 204+12.00 TO 209+79.00

SCALE: HOR. 1"=20'
VER. 1"=2'

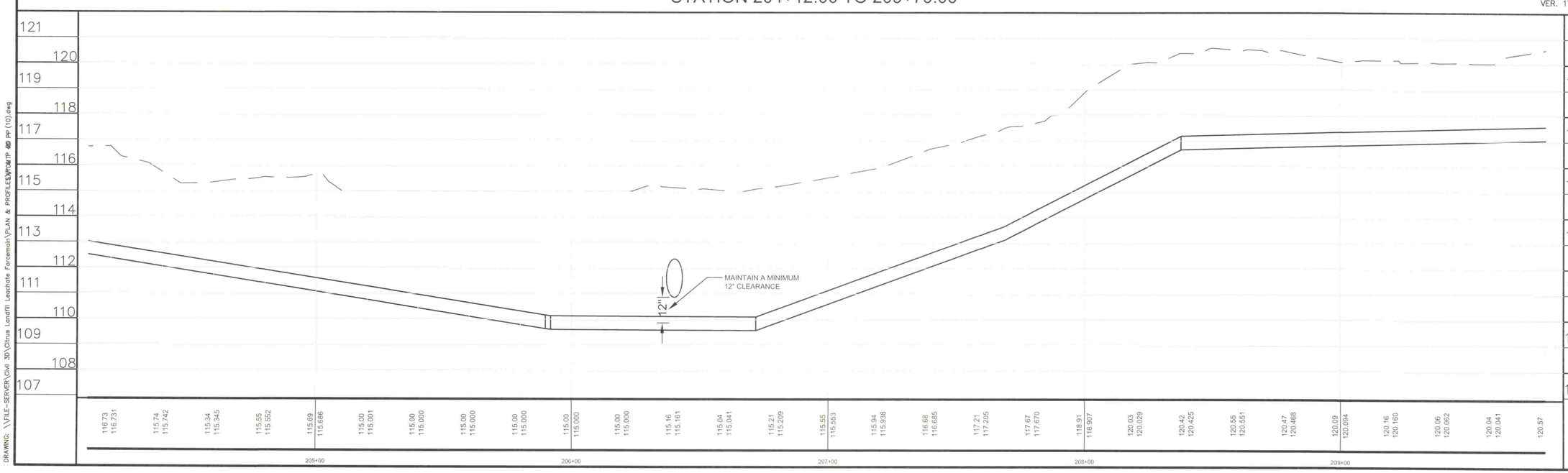

DRAWING: \\FILE-SERVER\Civil 3D\Citrus Landfill Leachate Forcemain\PLAN & PROFILES\P20 (10).dwg

DRAWN	DFS
CHECKED	TEB
DRAWING	P 20 - (10)
LAYOUT	40 PP
DATE	02-03-12

BURRELL ENGINEERING, INC.
CIVIL ENGINEERING C.A. No. 7973
12005 N. FLORIDA AVE DUNNELLON, FL 34434 PH. 352-489-4144 FAX 352-489-4741

CENTRAL LANDFILL LEACHATE FORCEMAIN CITRUS COUNTY, STATE

PLAN & PROFILE

NO.	REVISION	DATE
MARK	DESCRIPTION	DATE

TROY E. BURRELL, JR., P.E.
REG. ENGINEER NO. 36044
STATE OF FLORIDA
DATE 4/22/12

JOB NO. 11-23
FILE NO. M-18
SEC 1 TWP 19S RGE 18E

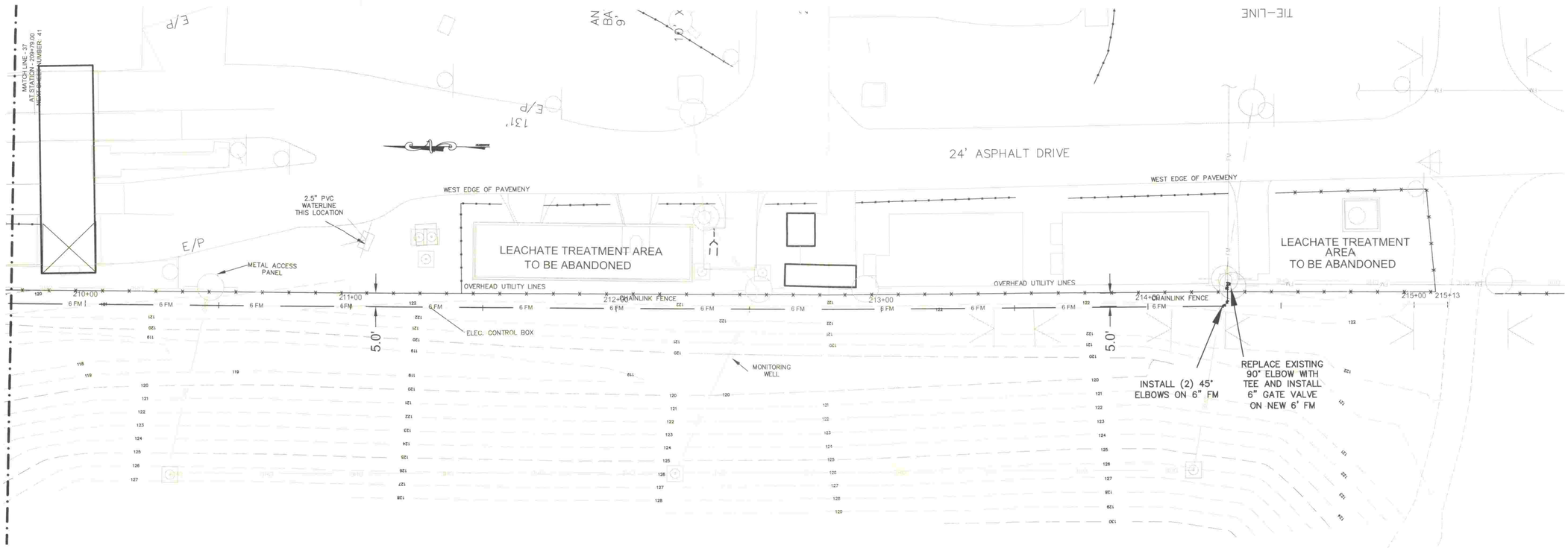

SCALE: HOR. 1"=20'
VER. 1"=2'

STATION 209+79.00 TO 215+19.45

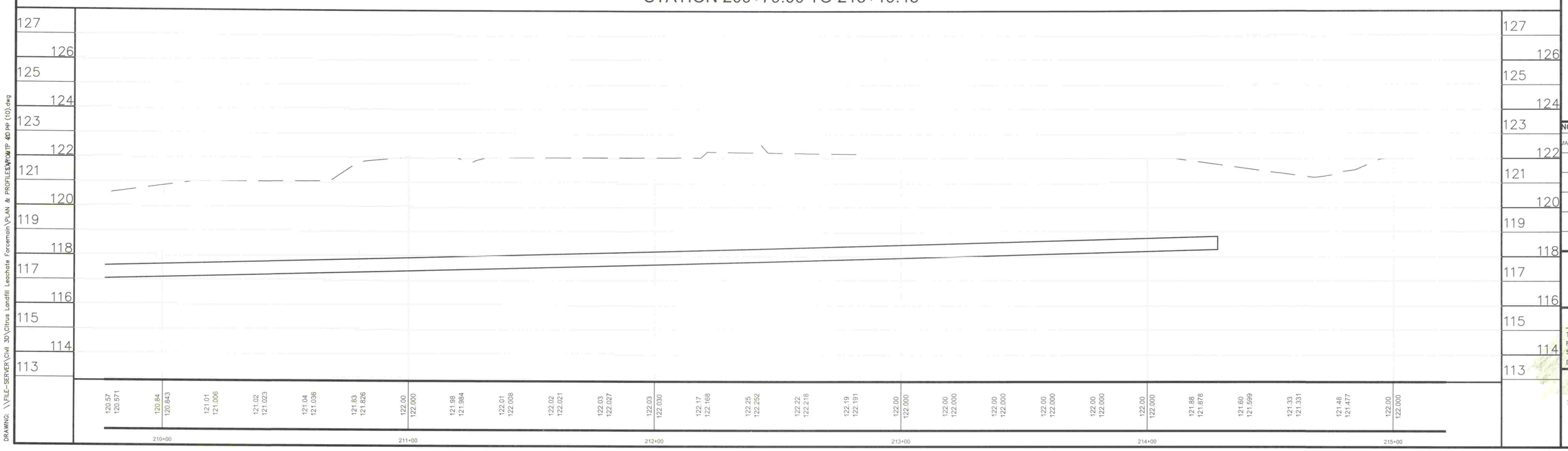

DRAWING: \\FILE-SERVER\Civil 3D\Citrus Landfill Leachate Forcemain\PLAN & PROFILES\PROJ P 20 PP (10).dwg

DRAWN	DFS
CHECKED	TEB
DRAWING	P 20 - (10)
LAYOUT	41 PP
DATE	02-03-12

BURRELL ENGINEERING, INC.
CIVIL ENGINEERING C.A. No. 7973
BEI
12005 N. FLORIDA AVE DUNNELLON, FL 34434 PH: 352-489-4144 FAX 352-489-4741

CENTRAL LANDFILL
LEACHATE FORCEMAIN
CITRUS COUNTY, STATE

PLAN & PROFILE

NO.	REVISION	DATE
MARK	DESCRIPTION	DATE

TROY E. BURRELL, JR., P.E.
REG. ENGINEER NO. 36044
STATE OF FLORIDA
DATE 4/12/12

JOB NO. 11-23
FILE NO. M-18
SEC 1-4 TWP 19S RGE 18E

CITRUS COUNTY
SOLID WASTE MANAGEMENT DIVISION

CENTRAL LANDFILL
OPERATIONS PERMIT RENEWAL DRAWINGS

CITRUS COUNTY, FLORIDA

FEBRUARY 2010

BOARD OF COUNTY COMMISSIONERS

Dennis Damato, Commissioner, District 1
Gary Bartell, Commissioner, District 2
Joe Meek, Commissioner. District 3
John Thrumston, Commissioner, District 4
Winn Webb, Commissioner, District 5

COUNTY ADMINISTRATOR

Anthony J. Schembri

PUBLIC WORKS DEPARTMENT

Glenn W. McCracken, Director

SOLID WASTE MANAGEMENT DIRECTOR

Casey Stephens

PROJECT LOCATION

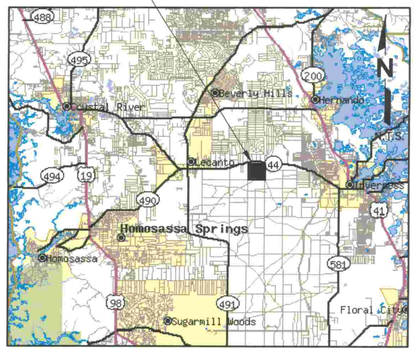

LOCATION MAP

DRAWING INDEX

DRAWING NO.		DRAWING TITLE
1	-	COVER SHEET
2	-	1-MILE AERIAL PHOTOGRAPH
⚠ 3	-	EXISTING FACILITY SITE PLAN (TOPOGRAPHIC SURVEY DATE 04/08/09)
⚠ 4	-	FINAL CLOSURE PLAN
5	-	PHASE 1, 2, AND 3 FILL SEQUENCE CLOSURE PLAN
6	-	SECTIONS
⚠ 7	-	DETAILS
8	-	DRAINAGE DETAILS - 1
9	-	DRAINAGE DETAILS - 2

⚠ REVISED PER R.A.I. NO. 1, APRIL 21, 2010

SCS ENGINEERS
STEARNS, CONRAD AND SCHMIDT
CONSULTING ENGINEERS
4041 PARK OAKS BLVD., SUITE 100
TAMPA, FLORIDA 33610
PH (813) 621-0080 FAX NO. (813) 623-6757
WWW.SCSENGINEERS.COM
FLORIDA CERTIFICATE OF AUTHORIZATION NO. 00004892

SCS PROJECT NO. 09208040.03

FLORIDA DEPARTMENT OF ENVIRONMENTAL PROTECTION
APR 21 2010
SOUTHWEST DISTRICT TAMPA

INSERTED INTO LOGS
APR 28 2010
INITIAL

DOMINIQUE H. BRAMLETT
LICENSE
STATE OF FLORIDA
4/20/10

DOMINIQUE H. BRAMLETT, P.E.
LICENSE NO. 61829

G:\PROJECT\Citrus\09208040.03\Operations\Permit\Renewal\08403\Cover.dwg Apr 20, 2010 - 1:4pm By: cmoyer

N

600 300 0 600
SCALE IN FEET

LEGEND

1 MILE RADIUS (APPROX.)

PHOTO DATE: 09/26/08

FLORIDA DEPARTMENT OF ENVIRONMENTAL PROTECTION
FEB 01 2010
SOUTHWEST DISTRICT
TAMPA

INSERTED INTO OCULUS
FEB 18 2010
INITIAL

REV	DATE	DESCRIPTION	BY

DOMINIQUE H. BRAMLETT, P.E.
LICENSE NO. 61829

DRAWING TITLE
1 - MILE AERIAL PHOTOGRAPH

PROJECT TITLE
CENTRAL LANDFILL OPERATIONS PERMIT RENEWAL DRAWINGS

CLIENT
CITRUS COUNTY
SOLID WASTE MANAGEMENT DIVISION
CITRUS COUNTY, FLORIDA

SCS ENGINEERS
STEARNS, CONRAD AND SCHMIDT
CONSULTING ENGINEERS
4401 PONCE DE LEON BLVD., SUITE 100, TAMPA, FL 33510
813 621-0080 FAX 813 623-6757
FLORIDA CERTIFICATE OF AUTHORIZATION NO. 00004892

PROJ. NO.	DSN. BY:	DWN. BY:	CHK. BY:	Q/A RVW. BY:	APP. BY:
09208040.03	DHB	CTN	DHB	DHB	CEH

CADD FILE: 084003AERIAL

DATE: FEBRUARY 2010

SCALE: AS SHOWN

DRAWING NO.

2 of **9**

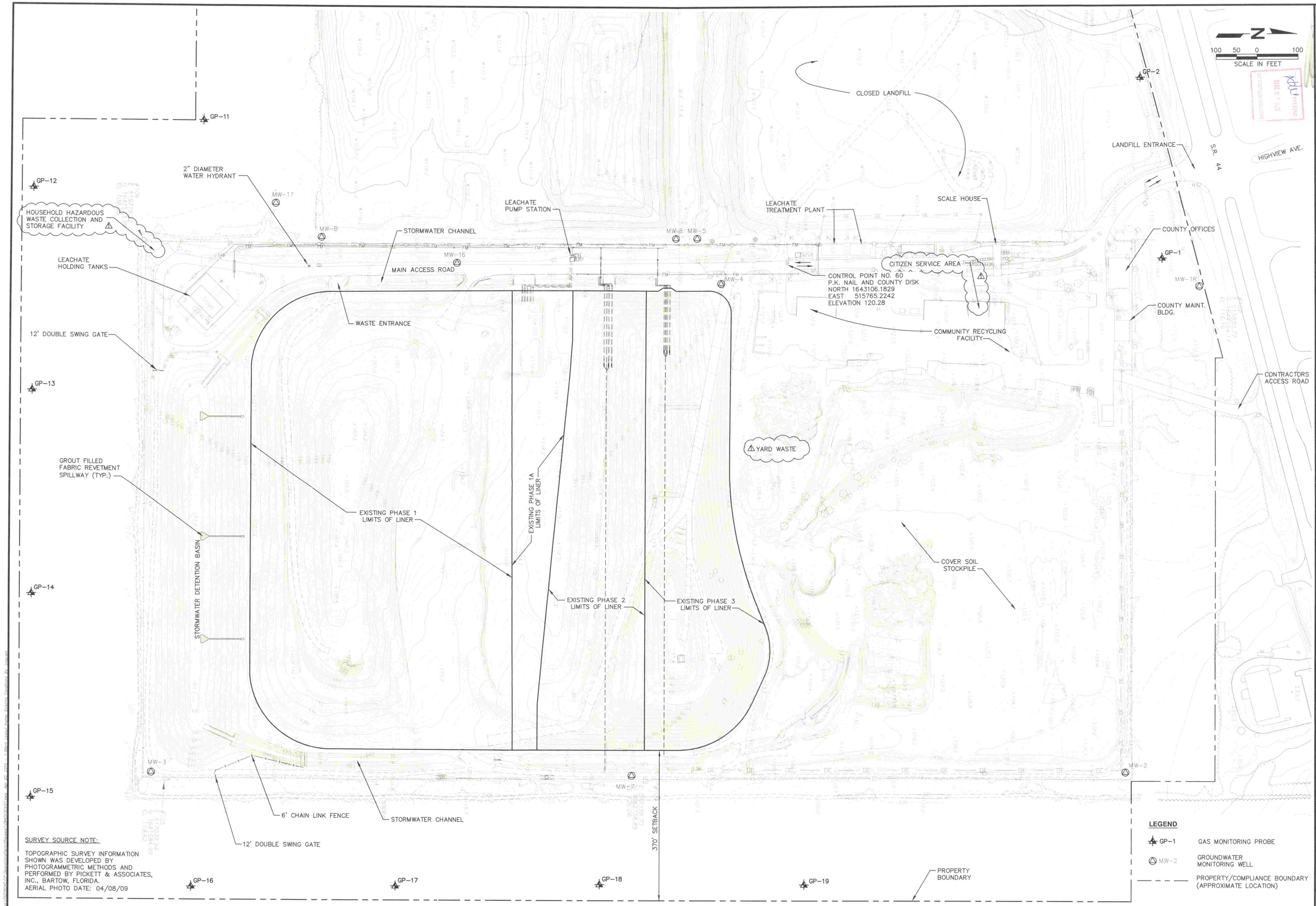

SURVEY SOURCE NOTE:

TOPOGRAPHIC SURVEY INFORMATION SHOWN WAS DEVELOPED BY PHOTOGRAMMETRIC METHODS AND PERFORMED BY PICKETT & ASSOCIATES, INC., BARTOW, FLORIDA.
AERIAL PHOTO DATE: 04/08/09

REV	DATE	DESCRIPTION	BY
1	4/21/10	REVISED PER R.A.I. NO. 1	DHB
2			
3			
4			
5			

DRAWING TITLE
EXISTING FACILITY SITE PLAN
(TOPOGRAPHIC SURVEY DATE 04/08/09)

PROJECT TITLE
CENTRAL LANDFILL
OPERATIONS PERMIT
RENEWAL DRAWINGS

CLIENT
CITRUS COUNTY
SOLID WASTE MANAGEMENT DIVISION
CITRUS COUNTY, FLORIDA

SCS ENGINEERS
STEARNS, CONRAD AND SCHMIDT
CONSULTING ENGINEERS
4404 PARK OAKS BLVD., SUITE 100, TAMPA, FL 33610
813-623-6363 FAX 813-623-3673
FLORIDA CERTIFICATE OF AUTHORIZATION NO. 00004892

PROJ. NO.	DWN. BY	Q/A RVW.	APP. BY
09208040.03	CTN	DHB	CEH
DSN. BY	CHK. BY		
DHB	DHB		

CADD FILE: 084003EXIST
DATE: FEBRUARY 2010
SCALE: AS SHOWN
DRAWING NO. 3 of 9

DOMINIQUE H. BRAMLETT, P.E. LICENSE NO. 61829
FLORIDA DEPARTMENT OF ENVIRONMENTAL PROTECTION
APR 21 2010
TAMPA

SURVEY SOURCE NOTE:

TOPOGRAPHIC SURVEY INFORMATION SHOWN WAS DEVELOPED BY PHOTOGRAMMETRIC METHODS AND PERFORMED BY PICKETT & ASSOCIATES, INC., BARTOW, FLORIDA.
AERIAL PHOTO DATE: 04/08/09

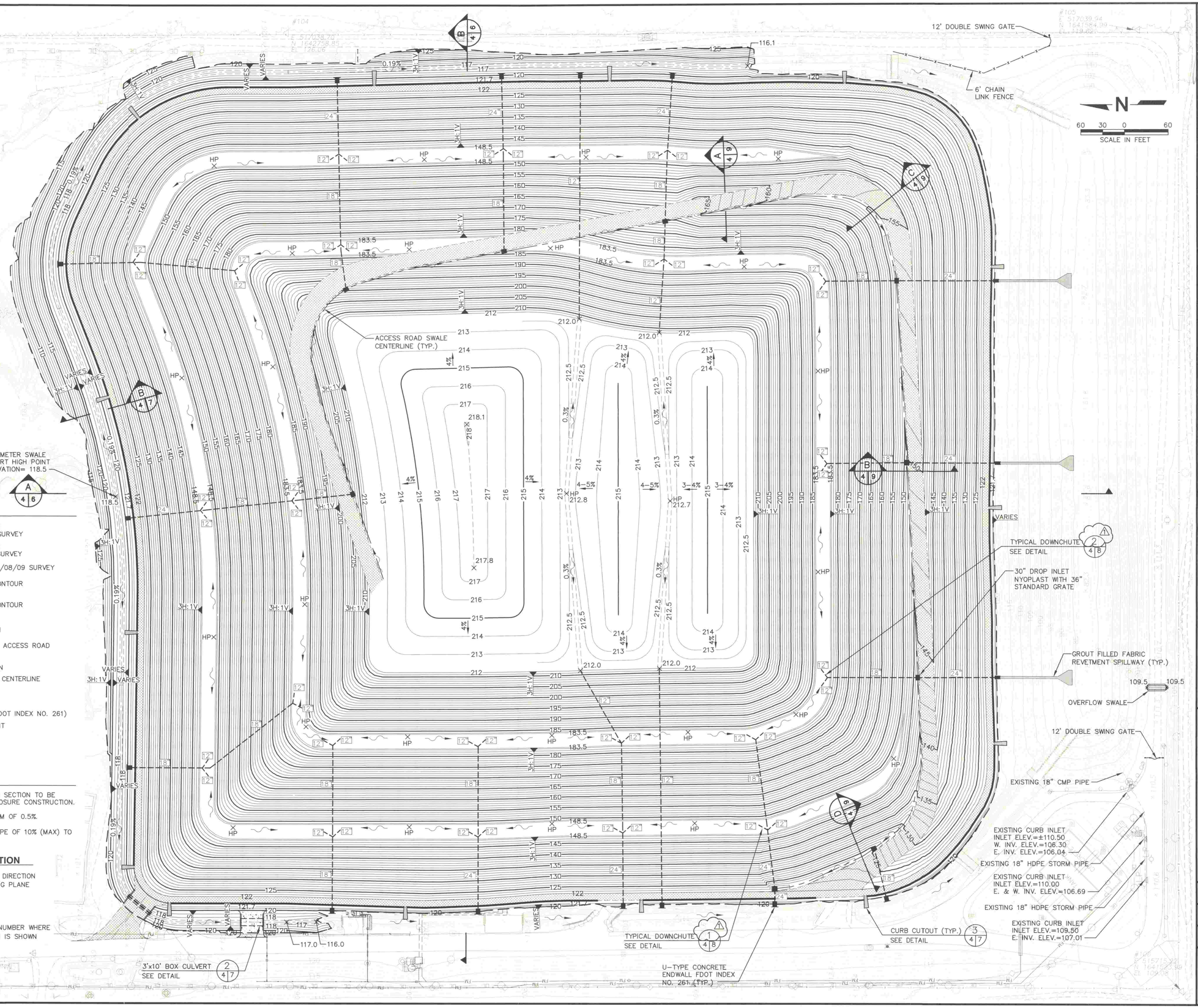

LEGEND

- EXISTING ELEVATIONAL CONTOUR (5 FOOT INTERVAL) 04/08/09 SURVEY
- EXISTING ELEVATIONAL CONTOUR (1 FOOT INTERVAL) 04/08/09 SURVEY
- EXISTING SPOT ELEVATION – 04/08/09 SURVEY
- FINAL CLOSURE ELEVATIONAL CONTOUR (5 FOOT INTERVAL)
- FINAL CLOSURE ELEVATIONAL CONTOUR (1 FOOT INTERVAL)
- FINAL CLOSURE SPOT ELEVATION
- UNPAVED PERIMETER BERM AND ACCESS ROAD (COMPACTED LIMEROCK)
- SURFACE WATER FLOW DIRECTION
- STORMWATER PERIMETER SWALE CENTERLINE
- ADS STORMWATER PIPE
- STORMWATER INLET
- U-TYPE CONCRETE ENDWALL (FDOT INDEX NO. 261)
- GROUT FILLED FABRIC REVETMENT
- CURB LOCATION
- LIMITS OF BENCH
- ADS N-12 PIPE SIZE DIAMETER

NOTES:

1. CURRENT ACCESS THROUGH PERIMETER DITCH SECTION TO BE REMOVED AND DITCH RESTORED PRIOR TO CLOSURE CONSTRUCTION.
2. ALL BENCH SWALES TO BE SLOPED A MINIMUM OF 0.5%.
3. SWALE NEXT TO ACCESS RAMP TO HAVE SLOPE OF 10% (MAX) TO 2% (MIN).

SECTION AND DETAIL DESIGNATION

DESIGNATION LETTER INDICATES SECTION, NUMBER INDICATES DETAIL OR ELEVATION

INDICATES DIRECTION OF CUTTING PLANE

SHEET NUMBER WHERE SECTION IS TAKEN

SHEET NUMBER WHERE SECTION IS SHOWN

REV	DATE	DESCRIPTION	BY
1	4/21/10	REVISED PER R.A.I. NO. 1	DHB

DOUGLAS H. BRAMLETT, P.E. LICENSE NO. 61829

DRAWING TITLE: FINAL CLOSURE PLAN

PROJECT TITLE: CENTRAL LANDFILL OPERATIONS PERMIT RENEWAL DRAWINGS

CLIENT: CITRUS COUNTY SOLID WASTE MANAGEMENT DIVISION CITRUS COUNTY, FLORIDA

SCS ENGINEERS
STEARNS, CONRAD AND SCHMIDT CONSULTING ENGINEERS
4041 PARK OAKS BLVD, SUITE 100, TAMPA, FL 33610
813-884-7168 FAX 813-884-7177
FLORIDA CERTIFICATE OF AUTHORIZATION NO. 00004892

PROJ. NO.	DWN. BY	CHK. BY	SUB. BY	APP. BY
09208040.03	CTN	DHB	DHB	CEH
DSN. BY	DHB			

CADD FILE: 084003CLOSURE

DATE: FEBRUARY 2010

SCALE: AS SHOWN

DRAWING NO. 4 of 9

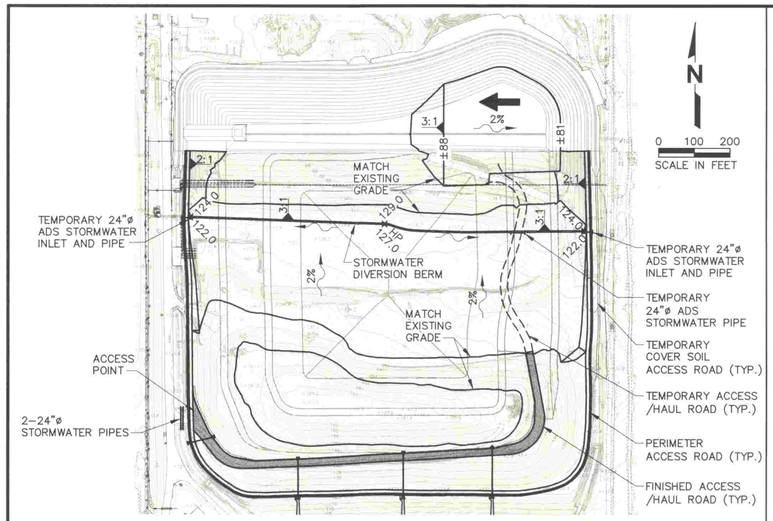

STEP 1

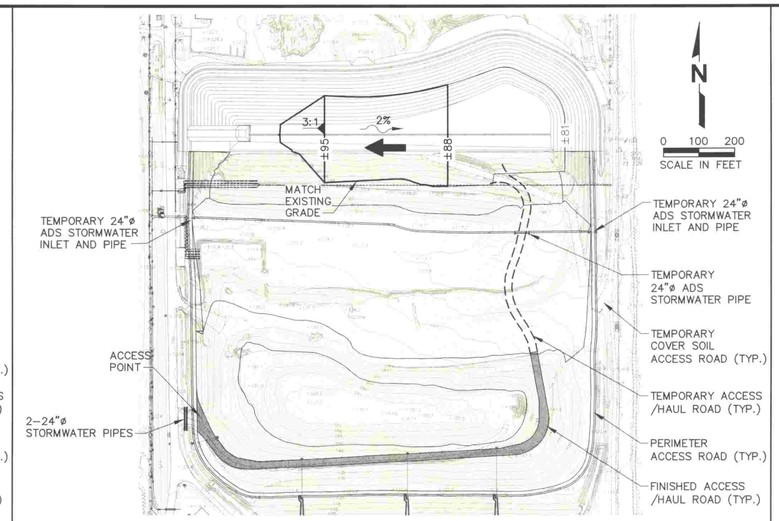

STEP 2

STEP 3

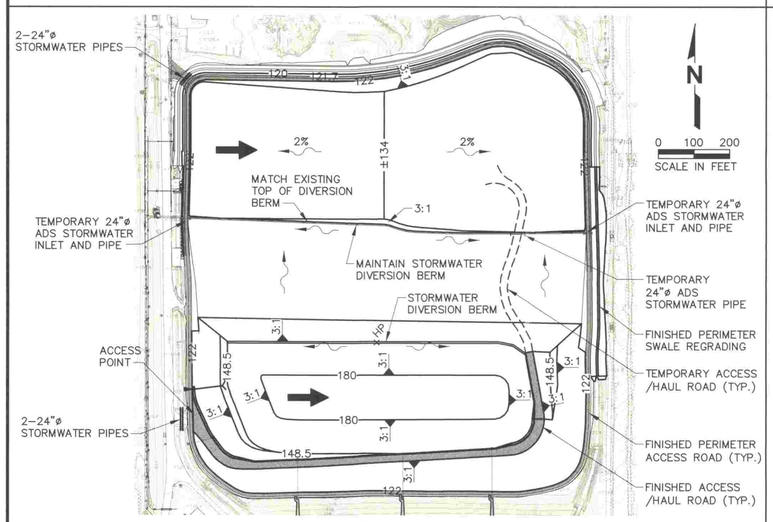

STEP 4

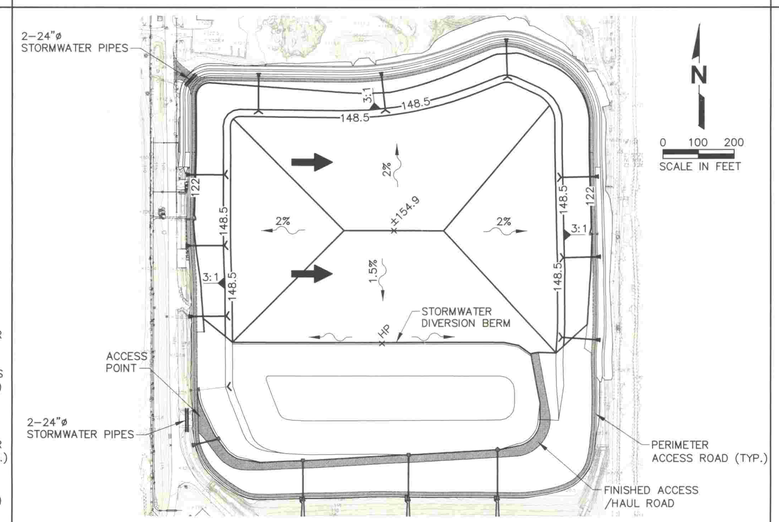

STEP 5

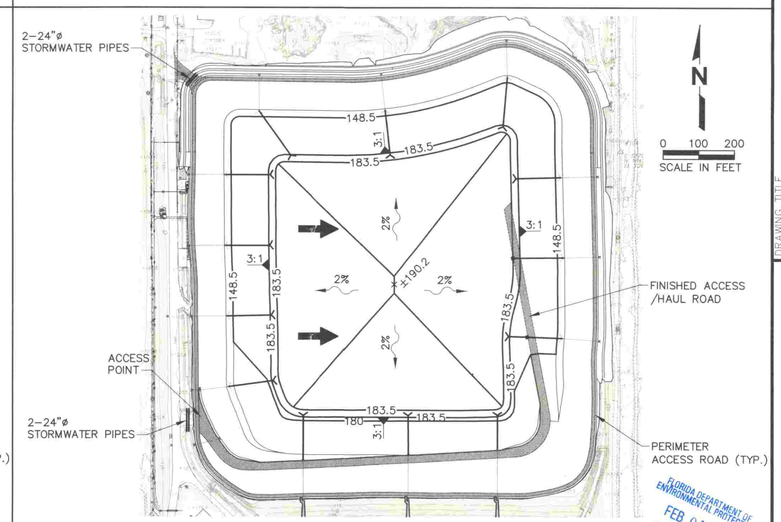

STEP 6

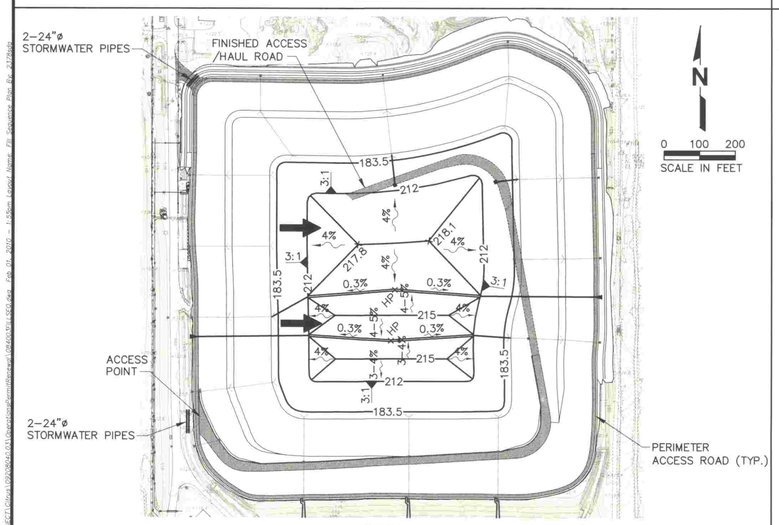

STEP 7

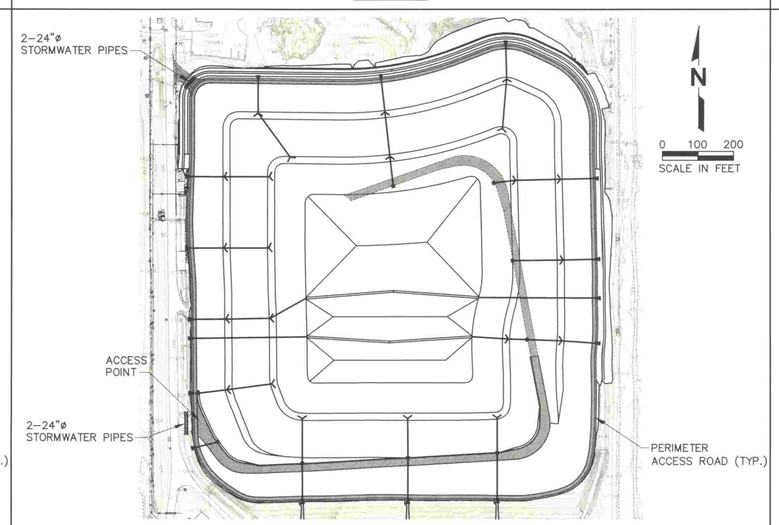

STEP 8/FINAL CLOSURE

LEGEND

- EXISTING ELEVATIONAL CONTOUR (5 FOOT INTERVAL) 04/08/09 SURVEY
- EXISTING ELEVATIONAL CONTOUR (1 FOOT INTERVAL) 04/08/09 SURVEY
- EXISTING SPOT ELEVATION 04/08/09 SURVEY
- SURFACE WATER FLOW DIRECTION
- ADS STORMWATER PIPE
- STORMWATER INLET
- U–TYPE CONCRETE ENDWALL (FDOT INDEX NO. 261)
- LIMIT OF FILL AREA CELL
- TEMPORARY ACCESS/HAUL ROAD (APPROX. LOCATION)
- PERMANENT ACCESS/HAUL ROAD (APPROX. LOCATION)
- GENERAL DIRECTION OF FILLING

NOTES

1. FINAL CONSTRUCTION GRADES SHOWN REPRESENT THE TOP OF FINAL COVER/CLOSURE CAP.
2. FUTURE PHASE 3 BOTTOM GRADES SHOWN IN STEPS 1, 2, AND 3 REPRESENT THE APPROXIMATE TOP OF LINER SYSTEM.
3. TOPOGRAPHIC SURVEY INFORMATION SHOWN WAS DEVELOPED BY PHOTOGRAMMETRIC METHODS AND PERFORMED BY PICKETT & ASSOCIATES, INC., BARTOW, FLORIDA.

GENERAL FILL SEQUENCE

STEP 1 – CONTINUE FILLING OPERATIONS IN PHASE 2 UNTIL ALL AREAS HAVE RECEIVED INTERMEDIATE COVER, AND STORMWATER RUNOFF CAN BE DIRECTED TO THE PERIMETER DITCHES. BEGIN FILLING EAST THIRD OF PHASE 3 IN TWO TEN FOOT LIFTS TO PROMOTE STORMWATER RUNOFF TO THE EAST END. A MINIMUM OF 2 PERCENT SLOPE WILL BE PROVIDED FROM WEST TO EAST.

STEP 2 – FILL NEXT THIRD OF THE CELL OF PHASE 3 AREA TO PROMOTE STORMWATER TO THE EAST END. A MINIMUM OF 2 PERCENT SLOPE WILL BE PROVIDED FROM WEST TO EAST.

STEP 3 – FILL LAST THIRD OF THE CELL OF PHASE 3 TO PROMOTE STORMWATER TO THE WEST END. A MINIMUM OF 2 PERCENT SLOPE WILL BE PROVIDED FROM EAST TO WEST (FOR THIS THIRD ONLY).

STEP 4 – FILL UP TO ELEVATION ± 134. FILL PHASE 1 AND 1A TO ELEVATION 180.

STEP 5 – FILL FROM ELEVATION ± 134 TO BENCH AT ELEVATION 148.5 AND COMPLETE CROWN TO ELEVATION ± 154.9.

STEP 6 – CONTINUE FILL TO NEXT BENCH AT ELEVATION 183.5 AND COMPLETE CROWN TO ELEVATION ± 190.2 WITH 2% MIN. SLOPE.

STEP 7 – FILL FROM BENCH AT ELEVATION 183.5 TO TOP OF SLOPE ELEVATION 212 AND COMPLETE CROWN TO ELEVATION 218.1 WITH SLOPES AS SHOWN.

FLORIDA DEPARTMENT OF ENVIRONMENTAL PROTECTION FEB 01 2010 SOUTHWEST DISTRICT TAMPA

INSERTED INTO OCULUS FEB 16 2010 INITIAL

REV	DATE	DESCRIPTION	BY

DOMINIC H. BRAMETT, P.E. LICENSE NO. 61829

DRAWING TITLE: PHASE 1, 2, AND 3 FILL SEQUENCE CLOSURE PLAN

PROJECT TITLE: CENTRAL LANDFILL OPERATIONS PERMIT RENEWAL DRAWINGS

CLIENT: CITRUS COUNTY SOLID WASTE MANAGEMENT DIVISION CITRUS COUNTY, FLORIDA

SCS ENGINEERS
STEARNS, CONRAD AND SCHMIDT CONSULTING ENGINEERS
4830 W. KENNEDY BLVD., TAMPA, FL 33610
PH (813) 621-0080 FAX NO. (813) 623-6757
FLORIDA CERTIFICATE OF AUTHORIZATION NO. 00004892

PROJ. NO.	DSN. BY	DWN. BY	CHK. BY	Q/A RVW BY	APP. BY
09208040.03	DHB	CTN	DHB	DHB	CEH

CADD FILE: 084003FILLSEQ

DATE: FEBRUARY 2010

SCALE: AS SHOWN

DRAWING NO. 5 of 9

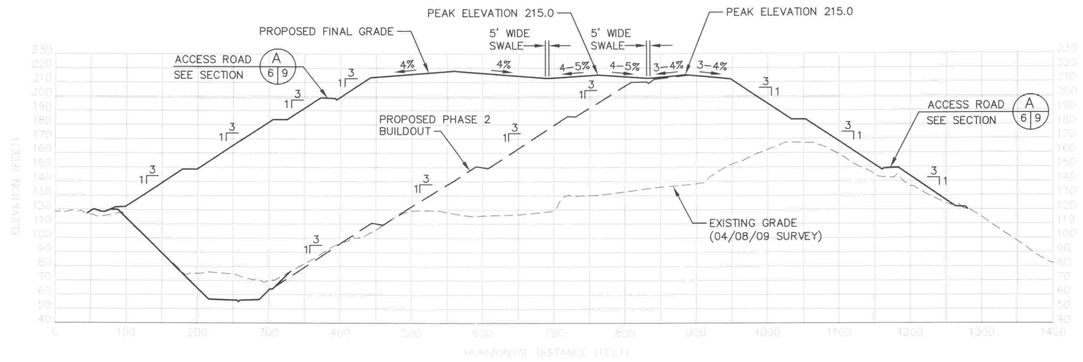

SECTION A 4 6

SCALE: 1" = 100' HORIZ.
1" = 50' VERT.

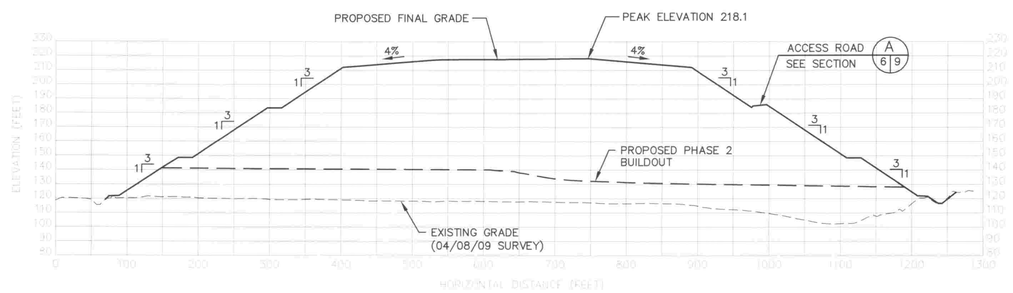

SECTION B 4 6

SCALE: 1" = 100' HORIZ.
1" = 50' VERT.

FLORIDA DEPARTMENT OF ENVIRONMENTAL PROTECTION
FEB 01 2010
SOUTHWEST DISTRICT TAMPA

INSERTED INTO OCULUS
FEB 16 2010
INITIAL

REV	DATE	DESCRIPTION	BY

DOMINIQUE HAGGERWALLETT, P.E.
LICENSE NO. 61829

DRAWING TITLE: **SECTIONS**

PROJECT TITLE: **CENTRAL LANDFILL OPERATIONS PERMIT RENEWAL DRAWINGS**

CLIENT: **CITRUS COUNTY SOLID WASTE MANAGEMENT DIVISION CITRUS COUNTY, FLORIDA**

SCS ENGINEERS
STEARNS, CONRAD AND SCHMIDT
CONSULTING ENGINEERS
4919 GRAND AVE, SUITE 100, TAMPA, FL 33610
813 620-9460 FAX 813 622-6757
FLORIDA CERTIFICATE OF AUTHORIZATION NO. 00004892

PROJ. NO. 09206040.03 | DSN. BY DHB | DWN. BY CTN | CHK. BY DHB | SUPV. BY DHB | APP. BY CEH

CADD FILE: 084003SECTIONS

DATE: FEBRUARY 2010

SCALE: AS SHOWN

DRAWING NO. 6 of 9

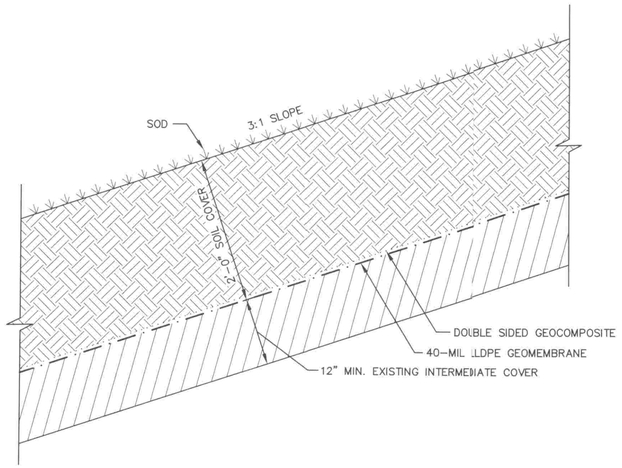

TYPICAL GEOSYNTHETIC CAP SYSTEM DETAIL (1 / 7 7)
SCALE: 1" = 1'

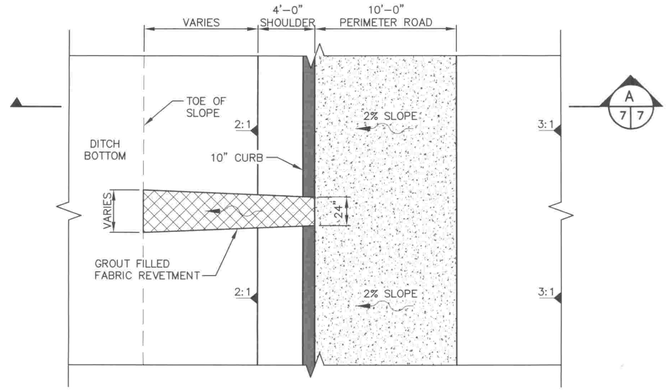

CURB CUTOUT (TYPICAL) DETAIL (3 / 4 7)
SCALE: 1" = 5'

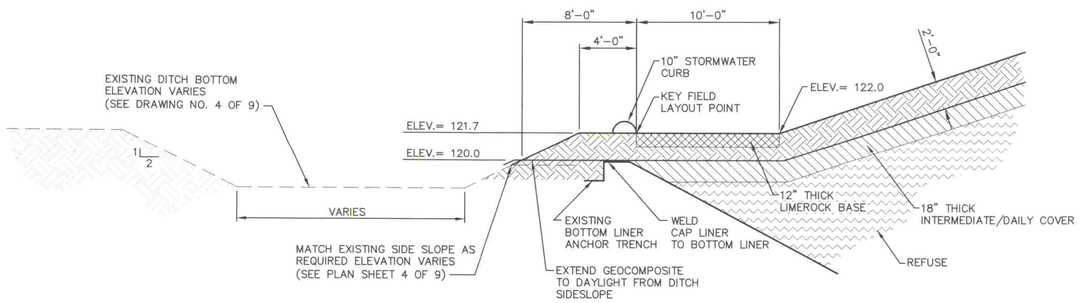

PERIMETER ROAD AND CURB SECTION (A / 7 7)
SCALE: 1" = 5'

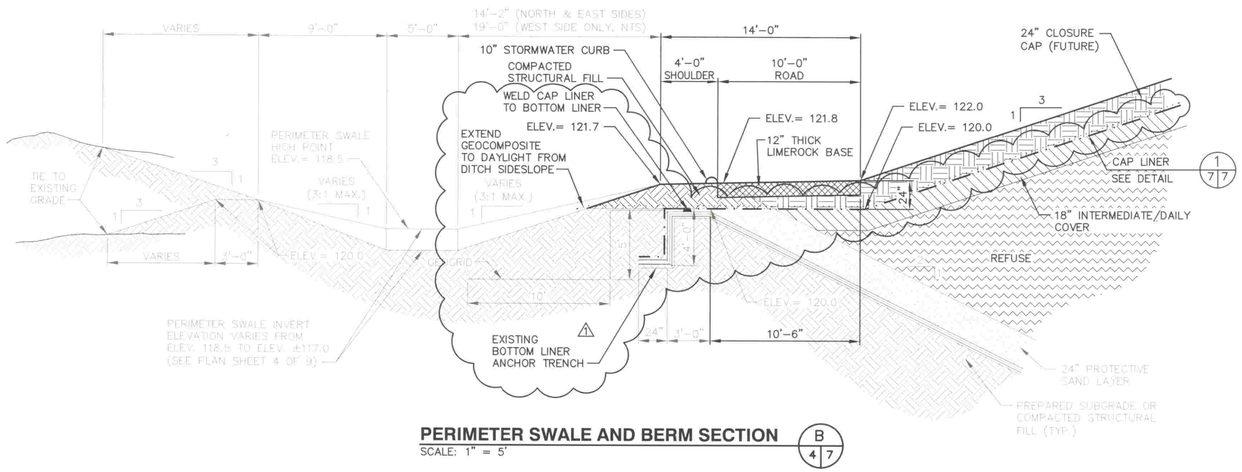

PERIMETER SWALE AND BERM SECTION (B / 4 7)
SCALE: 1" = 5'

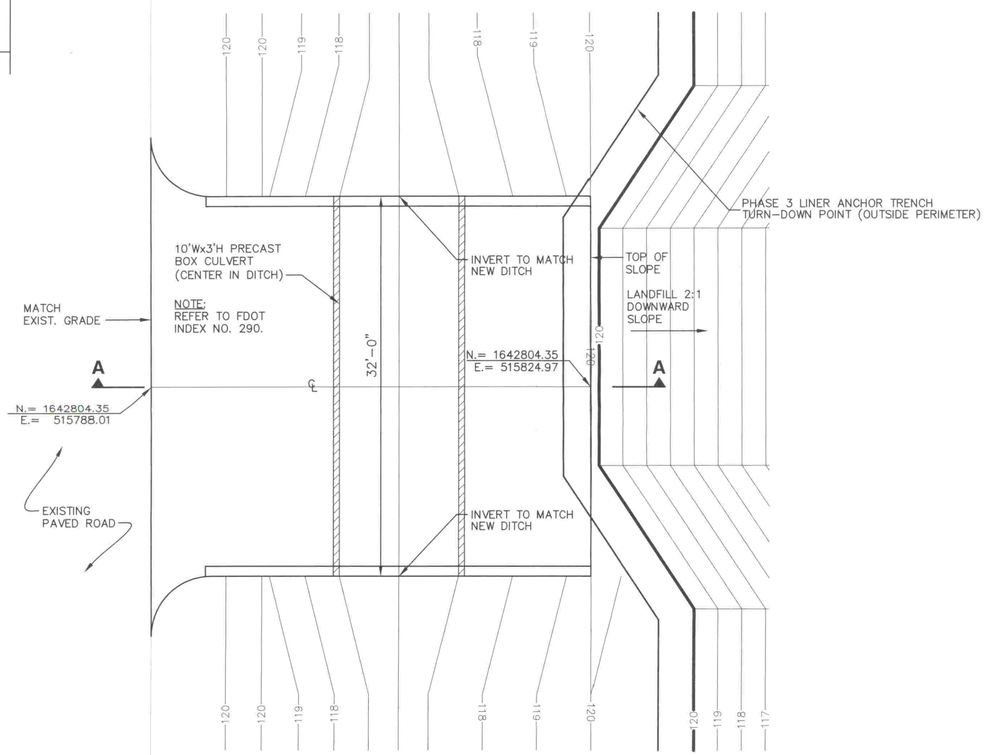

PLAN

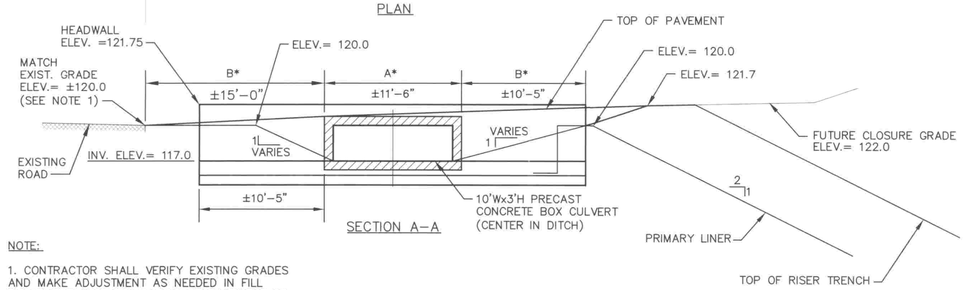

SECTION A–A

NOTE:

1. CONTRACTOR SHALL VERIFY EXISTING GRADES AND MAKE ADJUSTMENT AS NEEDED IN FILL PLACEMENT AND APPLICATION OF PAVEMENT SO THAT TRANSITION FROM NEW SURFACE TO EXISTING SURFACE IS FLUSH.

* CULVERT PAVEMENT GUIDE

A = 2" ASPHALT ONLY

B = 2" ASPHALT OVER 8" LIMEROCK BASE

BOX CULVERT DETAIL (2 / 4 7)
NOT TO SCALE

REV.	DATE	DESCRIPTION	BY
1	4/21/10	REVISED PER R.A.I. NO. 1	DHB

DOMINIQUE H. BRAMLETT, P.E. LICENSE NO. 61829

DRAWING TITLE: **DETAILS**

PROJECT TITLE: **CENTRAL LANDFILL OPERATIONS PERMIT RENEWAL DRAWINGS**

CLIENT: **CITRUS COUNTY SOLID WASTE MANAGEMENT DIVISION CITRUS COUNTY, FLORIDA**

SCS ENGINEERS
STEARNS, CONRAD AND SCHMIDT CONSULTING ENGINEERS
4041 PARK OAKS BLVD. SUITE 100, TAMPA, FL 33610
813 621-0080 FAX 813 622-9757
FLORIDA CERTIFICATE OF AUTHORIZATION NO. 00004892

PROJ. NO. 09208040.03 | DSN. BY: DHB | DWN. BY: CTN | CHK. BY: DHB | Q/A REVIEW BY: DHB | APPR. BY: CEH

CADD FILE: 084003DETL

DATE: FEBRUARY 2010

SCALE: AS SHOWN

DRAWING NO. 7 of 9

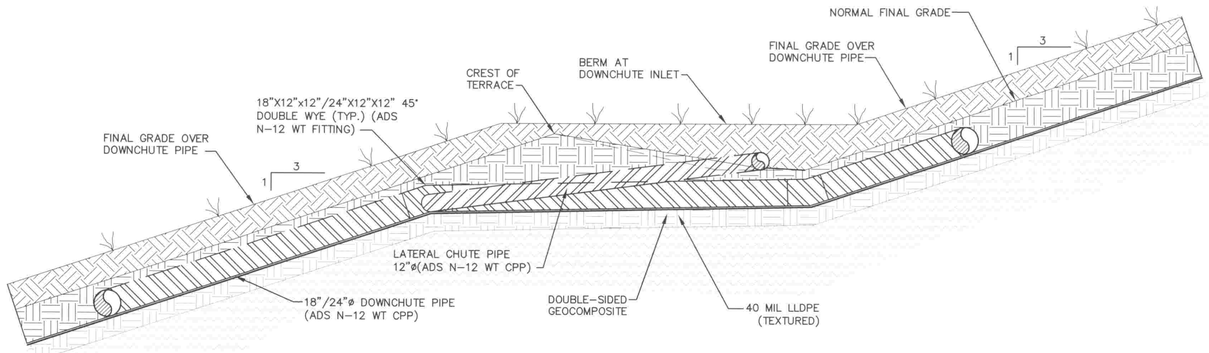

BOTTOM AND MIDDLE TERRACE INLET DOWNCHUTE PIPES SECTION (A 8|8)

SCALE: 1" = 4'-0"

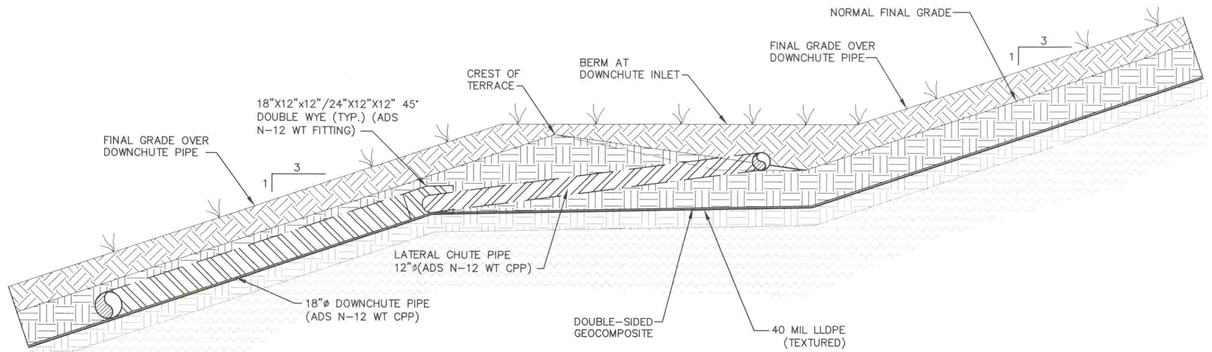

TOP TERRACE INLET AND DOWNCHUTE PIPES SECTION (B 8|8)

SCALE: 1" = 4'-0"

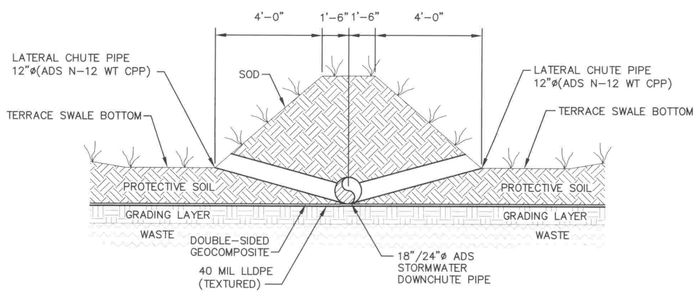

DOWNCHUTE INLET AND DOWNCHUTE PIPE SECTIONS (C 8|8)

SCALE: 1" = 2'-0"

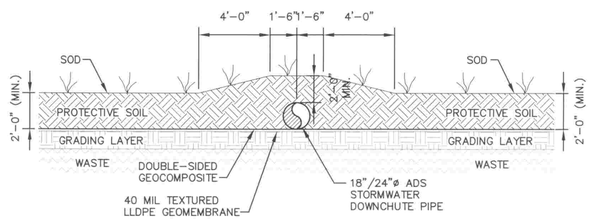

DOWNCHUTE INLET AND DOWNCHUTE PIPE SECTIONS (D 8|8)

SCALE: 1" = 2'-0"

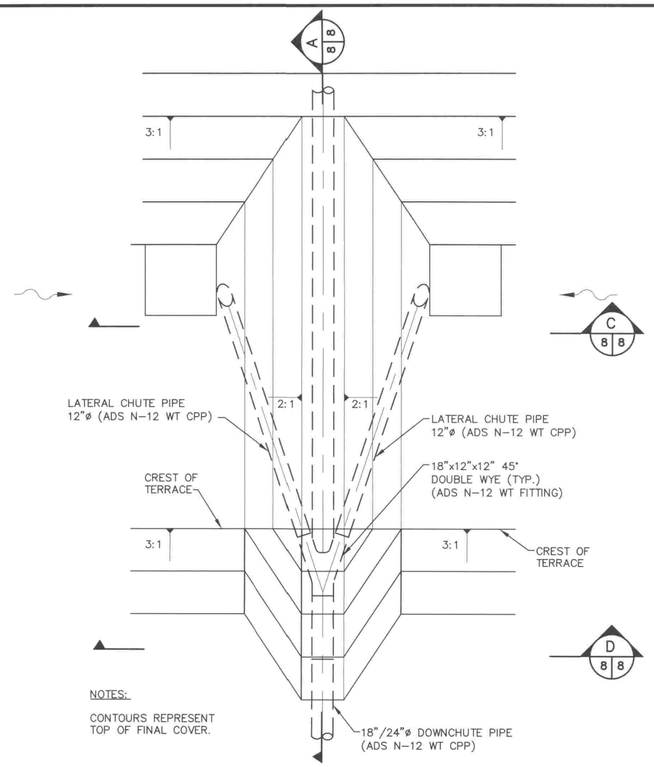

BOTTOM AND MIDDLE TERRACE INLET DOWNCHUTE PIPES (1 4|8)

SCALE: 1" = 4'-0"

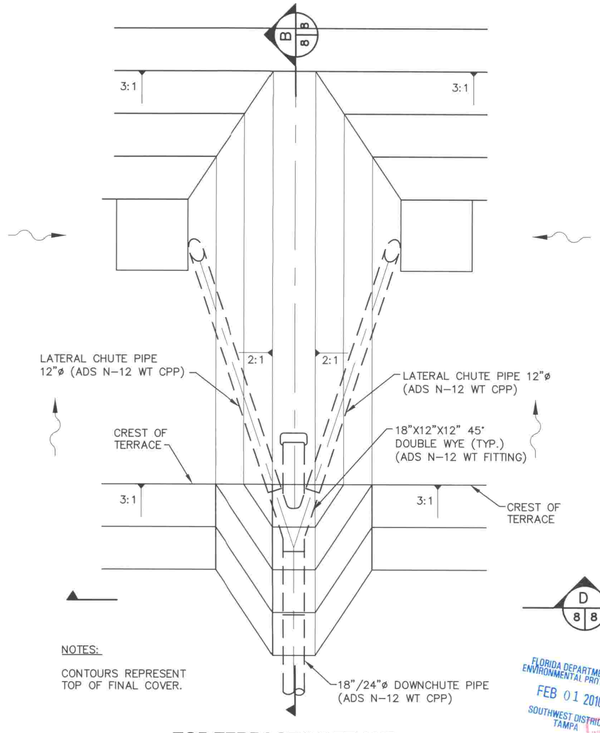

TOP TERRACE INLET AND DOWNCHUTE PIPES (2 4|8)

SCALE: 1" = 4'-0"

FLORIDA DEPARTMENT OF ENVIRONMENTAL PROTECTION
FEB 01 2010
SOUTHWEST DISTRICT TAMPA

INSERTED INTO OCULUS
FEB 16 2010
INITIAL MH

REV	DATE	DESCRIPTION	BY

DOMINIQUE H. BRAMLETT
STATE OF FLORIDA
LICENSE NO. 61629

DRAWING TITLE: DRAINAGE DETAILS - 1

PROJECT TITLE: CENTRAL LANDFILL OPERATIONS PERMIT RENEWAL DRAWINGS

CLIENT: CITRUS COUNTY SOLID WASTE MANAGEMENT DIVISION CITRUS COUNTY, FLORIDA

SCS ENGINEERS
STEARNS, CONRAD AND SCHMIDT CONSULTING ENGINEERS
4401 PARK OAKS BLVD., SUITE 100, TAMPA, FL 33610
813 621-0080 FAX 813 623-2757
FLORIDA CERTIFICATE OF AUTHORIZATION NO. 00004892

PROJ. NO. 09208040.03 | DWN. BY: CTN | Q/A RVW BY: DHB
DSN. BY: DHB | CHK. BY: DHB | APP. BY: CEH

CADD FILE: 084003DRNDETL1

DATE: FEBRUARY 2010

SCALE: AS SHOWN

DRAWING NO. 8 of 9

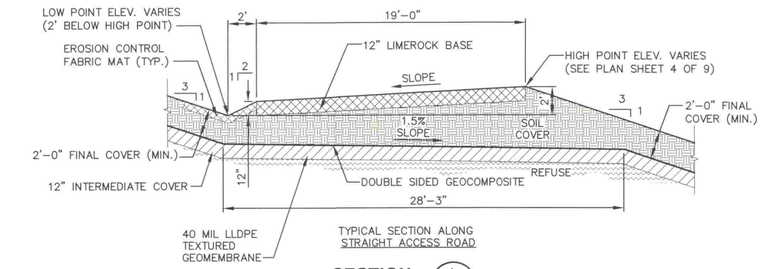

SECTION A (4,6 | 9)
SCALE: 1" = 5'

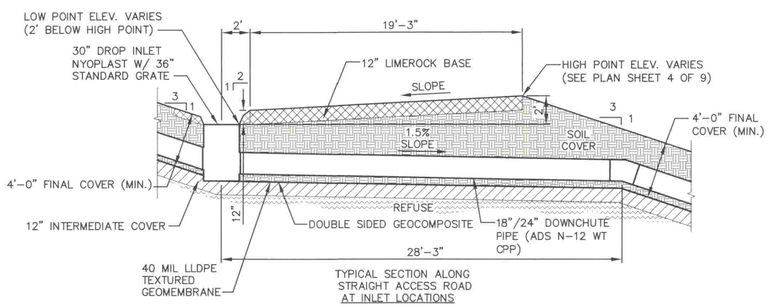

SECTION B (4 | 9)
SCALE: 1" = 5'

SECTION C (4 | 9)
SCALE: 1" = 5'

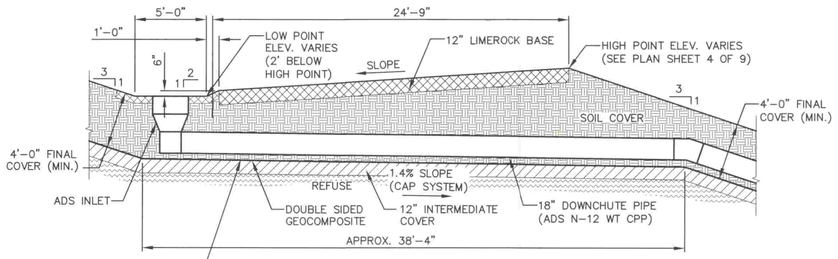

SECTION D (4 | 9)
SCALE: 1" = 5'

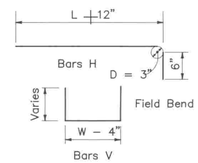

BENDING DIAGRAM

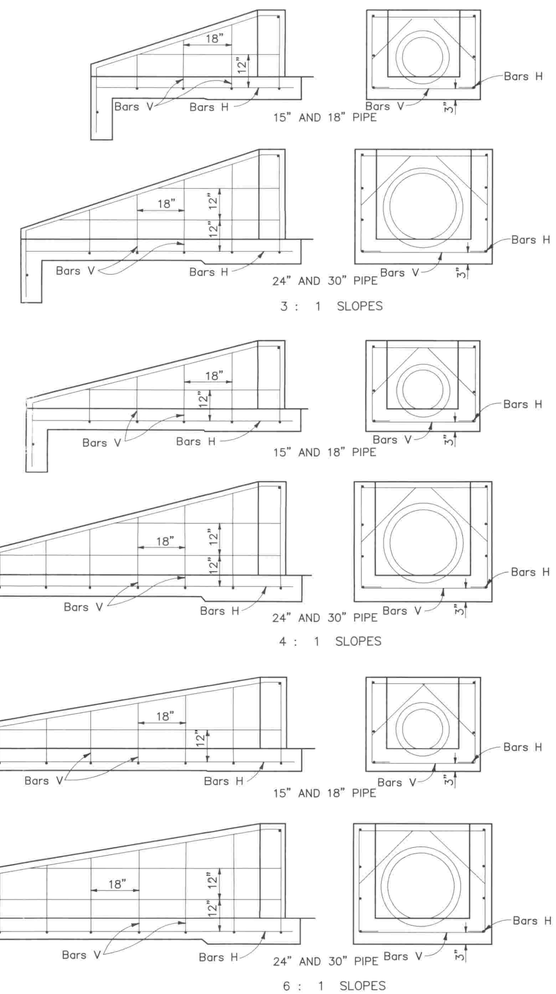

SIDE VIEWS AND BACKWALL SECTIONS
REINFORCING DETAILS

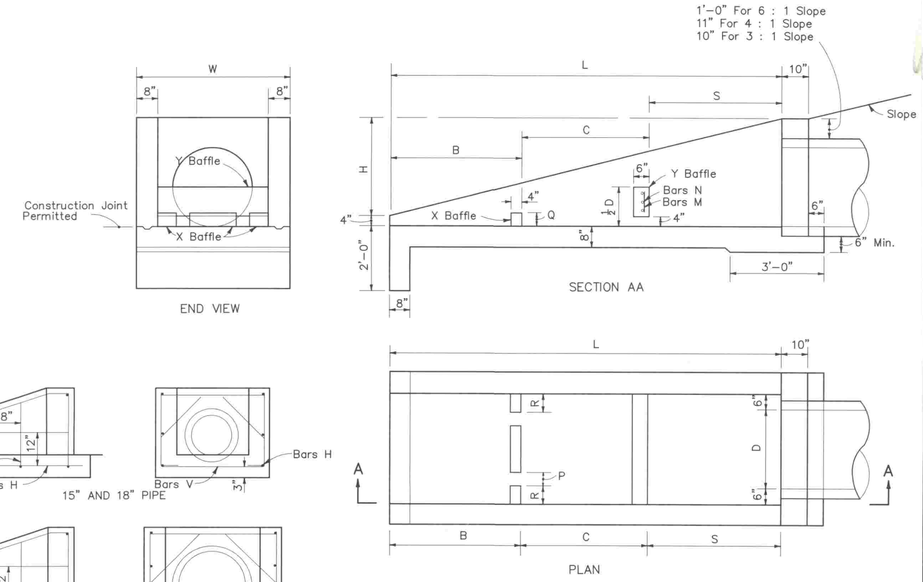

DIMENSIONAL DETAILS

DIMENSIONS AND QUANTITIES FOR ONE U-ENDWALL

Rate Of Slope	Pipe Size D	Pipe Size Area Sq. Ft.	L	H	W	Baffle Locations (When Required) S	B	C	Concrete Class ~ Cu. Yd.	Reinf. Steel Lbs.
3 : 1	15"	1.23	5'-3"	1'-9"	3'-7"	1'-9"	1'-9"	1'-9"	1.19	51
	18"	1.77	6'-0"	2'-0"	3'-10"	2'-0"	2'-0"	2'-0"	1.42	56
	24"	3.14	7'-6"	2'-6"	4'-4"	2'-6"	2'-6"	2'-6"	1.94	77
	30"	4.91	9'-0"	3'-0"	4'-10"	3'-0"	3'-0"	3'-0"	2.54	96
4 : 1	15"	1.23	7'-4"	1'-10"	3'-7"	2'-6"	2'-6"	2'-4"	1.54	64
	18"	1.77	8'-4"	2'-1"	3'-10"	2'-10"	2'-10"	2'-8"	1.84	71
	24"	3.14	10'-4"	2'-7"	4'-4"	3'-6"	3'-6"	3'-4"	2.53	92
	30"	4.91	12'-4"	3'-1"	4'-10"	4'-2"	4'-2"	4'-0"	3.34	124
6 : 1	15"	1.23	11'-6"	1'-11"	3'-7"	3'-10"	3'-10"	3'-10"	2.19	89
	18"	1.77	13'-0"	2'-2"	3'-10"	4'-4"	4'-4"	4'-4"	2.63	103
	24"	3.14	16'-0"	2'-8"	4'-4"	5'-4"	5'-4"	5'-4"	3.59	143
	30"	4.91	19'-0"	3'-2"	4'-10"	6'-4"	6'-4"	6'-4"	4.81	180

DIMENSIONS AND QUANTITIES FOR BAFFLES

Pipe Size D	X Baffle P Width	X Baffle Q Height	X Baffle R Length	Y Baffle Reinf. Steel Bar M	Y Baffle Reinf. Steel Bar N	Concrete Class ~ Cu. Yd.	Reinf. Steel Lbs.
15"	4"	4"	4"	2-# 4	1-# 4	0.10	4
18"	4"	4"	5"	3-# 4	2-# 4		8
24"	5"	5"	6"	4-# 4	3-# 4		12
30"	5"	5"	7"	4-# 4	4-# 4		16

ENDWALLS WITH AND WITHOUT BAFFLES FOR 3 : 1, 4 : 1 AND 6 : 1 SLOPES

U-TYPE CONCRETE ENDWALLS
BAFFLES AND GRATE OPTIONAL
15" TO 30" PIPE

FDOT INDEX NO. 261

FLORIDA DEPARTMENT OF ENVIRONMENTAL PROTECTION
FEB 01 2010
SOUTHWEST DISTRICT TAMPA

INSERTED INTO OCULUS
FEB 16 2010
INITIAL

REV	DATE	DESCRIPTION	BY

DOMINIQUE H. BRAMLETT P.E. LICENSE NO. 61929

DRAWING TITLE: DRAINAGE DETAILS - 2

PROJECT TITLE: CENTRAL LANDFILL OPERATIONS PERMIT RENEWAL DRAWINGS

CLIENT: CITRUS COUNTY SOLID WASTE MANAGEMENT DIVISION CITRUS COUNTY, FLORIDA

SCS ENGINEERS
STEARNS, CONRAD AND SCHMIDT
CONSULTING ENGINEERS
4901 PARK OAKS BLVD, SUITE 100, TAMPA, FL 33610
813 621-0080 FAX 813 623-6757
FLORIDA CERTIFICATE OF AUTHORIZATION NO. 00004892

PROJ. NO. 09208040.03 | DSN. BY DHB | DWN. BY CTN | CHK. BY DHB | Q/A RVW BY DHB | APP. BY CEH

CADD FILE: 084003DRNDETL2

DATE: FEBRUARY 2010

SCALE: AS SHOWN

DRAWING NO. 9 of 9