1564159 (1)

CONSTRUCTION PLANS FOR

LENA ROAD LANDFILL
STORMWATER SYSTEM IMPROVEMENTS

PREPARED FOR:

MANATEE COUNTY FLORIDA

MANATEE COUNTY
PROJECT MANAGEMENT
DEPARTMENT

1026 26th AVENUE EAST
BRADENTON, FLORIDA 34208

SHEET	DESCRIPTION
1	COVER
2	GENERAL NOTES, LEGEND & ABBREVIATIONS
3	KEY SHEET
4	PLAN & CROSS SECTIONS A, B & C
5	PLAN & CROSS SECTIONS D, E, F & G
6	PLAN & CROSS SECTOPNS H, I & J
7	PLAN & CROSS SECTIONS K, L, M & N
8	PLAN & CROSS SECTIONS O, P & Q
9	PLAN & CROSS SECTION R
10	PLAN FILTER SYSTEM, FILTERED WATER LINE AND DETENTION POND
11	PLAN & PROFILE FILTERED WATER LINE, LEACHATE COLLECTION AND FM
12	PLAN & PROFILE FILTERED WATER LINE, LEACHATE COLLECTION AND FM
13	MISCELLANEOUS DETAILS
14	DETAILS
15	PLAN - AUTOMATIC DISK FILTER SYSTEM
16	SECTIONS - AUTOMATIC DISK FILTER SYSTEM
17	FILTER FEED PUMPS
18	DETAILS - FILTERS
19	STRUCTURAL - U-TYPE CONCRETE ENDWALL W/ BAFFLES
E-1	ELECTRICAL - FILTER SYSTEM PLAN
E-2	ELECTRICAL - AUTOMATIC DISK FILTER PLAN
E-3	ELECTRICAL - SITE PLAN

INDEX TO DRAWINGS

PREPARED BY:

POST, BUCKLEY, SCHUH & JERNIGAN, INC., D/B/A/

PBSJ

PRINCIPAL ADDRESS:
2001 NW 107th AVENUE
MIAMI, FL. 33172-2507
FBPR CERT. OF AUTH. No. 24

PRODUCTION ADDRESS:
2803 FRUITVILLE ROAD, STE 130
SARASOTA, FLORIDA 34237
Ph. (941) 954-4036

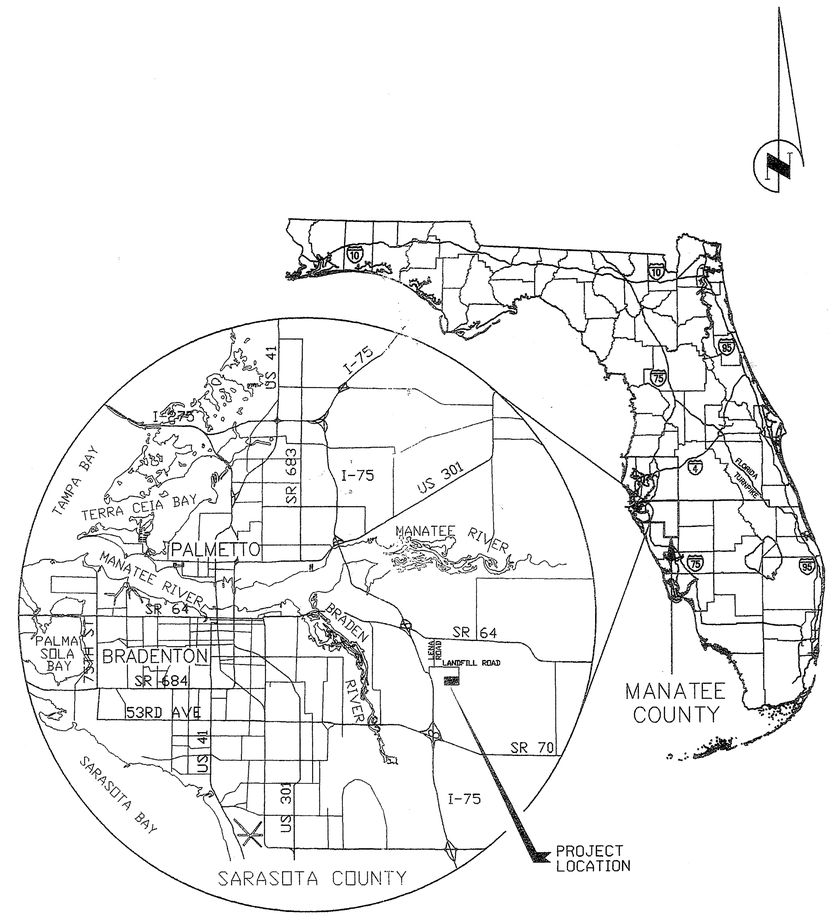

VICINITY MAP

D.E.P.
JUN 2 2 2005
Southwest District Tampa

SEPTEMBER, 2004

(replaced by new rec'd 9/20/05) FILE ONLY

GENERAL NOTES

1. THE CONTRACTOR SHALL BE RESPONSIBLE FOR MEETING ALL CONDITIONS AND REQUIREMENTS OF ALL PERMITS AND ALL GOVERNING FEDERAL, STATE, AND LOCAL AGENCIES.

2. EXISTING UNDERGROUND FACILITIES, STRUCTURES, AND UTILITIES HAVE BEEN LOCATED FROM THE BEST AVAILABLE SURVEY DATA AND RECORDS AND THEIR LOCATIONS MUST ONLY BE CONSIDERED AS APPROXIMATE. IT SHALL BE THE CONTRACTOR'S RESPONSIBILITY TO VERIFY THE EXACT LOCATION OF ALL EXISTING UTILITIES SHOWN ON THE PLANS AND ANY OTHER UTILITIES WHICH MAY NOT BE SHOWN ON THE PLANS. THE CONTRACTOR SHALL NOTIFY ALL UTILITY COMPANIES IN THE AREA AT LEAST 72 HOURS PRIOR TO BEGINNING CONSTRUCTION. CALL FLORIDA SUNSHINE STATE ONE CALL CENTER AT 1-800-432-4770.

3. A HORIZONTAL SPACING OF 10 FEET OUTSIDE TO OUTSIDE SHALL BE MAINTAINED BETWEEN POTABLE WATER MAINS AND ANY SANITARY SEWER MAINS. IN THE CASE OF A CROSSING, A VERTICAL SEPARATION OF NOT LESS THAN 18" SHALL BE MAINTAINED.

4. THE CONTRACTOR SHALL PROVIDE ALL DEWATERING EQUIPMENT NECESSARY TO KEEP ALL EXCAVATIONS DRY AND SHALL PROVIDE ALL NECESSARY SHEETING, SHORING, AND BRACING NECESSARY TO PROTECT ADJACENT STRUCTURES, UTILITIES, AND PAVEMENT, OR TO MINIMIZE TRENCH WIDTH.

5. THE CONTRACTOR SHALL PROVIDE HAY BALES AND/OR SILT FENCES AROUND THE CONSTRUCTION ACTIVITY, AS NECESSARY, TO PREVENT THE TRANSPORTATION OF SEDIMENTS DOWNSTREAM INTO STREETS, STORM SEWERS, OPEN DITCHES, LAKES, RETENTION PONDS, PRIVATE PROPERTY, ETC., AND SHALL PERFORM ALL NECESSARY INSPECTIONS AND MAINTENANCE IN ACCORDANCE WITH THE STORMWATER POLLUTION PREVENTION PLAN (SPPP), AND FEDERAL, STATE, AND LOCAL GOVERNING AGENCY REQUIREMENTS.

6. THE CONTRACTOR SHALL IMMEDIATELY NOTIFY THE OWNER'S CONSTRUCTION MANAGER REGARDING ANY CONFLICTS OR DISCREPANCIES ARISING DURING CONSTRUCTION.

7. THE CONTRACTOR SHALL BE RESPONSIBLE FOR ANY DAMAGE TO EXISTING FACILITIES, STRUCTURES, OR UTILITIES CAUSED BY CONSTRUCTION OPERATIONS WHICH HAVE BEEN PREVIOUSLY LOCATED BY THEIR RESPECTIVE OWNERS.

8. CONNECTIONS TO EXISTING FACILITIES SHALL BE DONE IN THE PRESENCE OF THE UTILITY OWNER AND THE ENGINEER. THE CONTRACTOR SHALL GIVE AT LEAST 2 WEEKS NOTICE TO ALL PARTIES CONCERNED PRIOR TO BEGINNING WORK.

9. ALL SURPLUS EXCAVATION AND DEMOLITION MATERIAL SHALL BE DISPOSED OF BY THE CONTRACTOR AT NO ADDITIONAL EXPENSE TO THE OWNER.

10. THE CONTRACTOR SHALL BE RESPONSIBLE FOR COMPLIANCE WITH THE FLORIDA TRENCH SAFETY ACT, 90-96, LAWS OF FLORIDA, EFFECTIVE OCTOBER 1, 1990, AND THE OCCUPATIONAL SAFETY AND HEALTH ADMINISTRATION EXCAVATION SAFETY STANDARDS, 29 CFR 1926.650, SUBPART P, AS AMENDED. THE CONTRACTOR SHALL INCLUDE IN THE TOTAL BID PRICE, ALL COSTS FOR COMPLIANCE WITH THESE REGULATIONS.

11. ALL DISTURBED AREAS SHALL BE RESTORED TO THEIR ORIGINAL CONDITION OR BETTER UNLESS OTHERWISE NOTED.

12. THE CONTRACTOR SHALL BE RESPONSIBLE FOR REPAIRING OR REPLACING ANY DAMAGED ITEMS SUCH AS DRIVEWAYS, MAILBOXES, STREET SIGNS, FENCES, ETC., AS DEEMED NECESSARY BY THE COUNTY AND/OR ENGINEER.

13. ALL ELEVATIONS ARE BASED UPON NATIONAL GEODETIC VERTICAL DATUM, 1929.

14. THE CONTRACTOR SHALL BE REQUIRED TO OBTAIN ALL APPLICABLE PERMITS.

15. ALL FITTINGS USED ON THIS PROJECT SHALL BE DUCTILE IRON UNLESS OTHERWISE SHOWN. ALL MECHANICAL JOINT FITTINGS AND VALVES ARE TO BE RESTRAINED USING THE "MEGA-LUG" SYSTEM OR EQUAL.

16. THE EXHAUST SYSTEM OF ALL GASOLINE AND DIESEL ENGINES SHALL BE EQUIPPED WITH MUFFLERS THAT MEET THE EQUIPMENT MANUFACTURER'S REQUIREMENTS FOR NOISE SUPPRESSION. THE CONTRACTOR SHALL, AT THE DIRECTION OF THE ENGINEER DUE TO RESIDENTIAL COMPLAINTS, INSTALL NOISE ABATEMENT BAFFELS POSITIONED TO BREAK LINE-OF-SITE FROM THE NOISE SOURCE TO AFFECTED RESIDENCES, AS APPROVED BY THE ENGINEER.

17. THE CONTRACTOR SHALL PROVIDE PROPER WARNING SIGNS, BARRICADES, TEMPORARY FENCING AND OTHER APPROPRIATE SAFETY DEVICES DURING THE EXECUTION OF THE WORK TO PROVIDE PUBLIC PROTECTION AND SAFETY.

18. MAINTENANCE OF TRAFFIC SIGNS AND OTHER TRAFFIC CONTROL DEVICES SHALL BE PROVIDED BY THE CONTRACTOR DURING CONSTRUCTION AS REQUIRED BY THE F.D.O.T.

19. THE CONTRACTOR IS RESPONSIBLE FOR DISPOSAL OF ALL CLEARED VEGETATION WITHIN FIVE DAYS OF CLEARING AND GRUBBING WORK.

20. THE CONTRACTOR SHALL PROVIDE ACCESS FOR TRAFFIC AT ALL TIMES DURING CONSTRUCTION.

LEGEND

RCP = REINFORCED CONCRETE PIPE
ERCP = ELLIPTICAL REINFORCED CONCRETE PIPE
PVC = POLY VINYL CHLORIDE PIPE
IE = INVERT ELEVATION
ELEV = ELEVATION
W/ = WITH
TOS = TOP OF SLOPE
TOB = TOP OF BANK
ASPH = ASPHALT
CONC = CONCRETE
◎ = MANHOLE
Ⓢ = SANITARY MANHOLE

ABBREVIATIONS

APPROX	APPROXIMATELY
ALUM	ALUMINUM
ARV	AIR RELEASE VALVE (MANUAL)
AWWA	AMERICAN WATER WORKS ASSOC.
AVG	AVERAGE
ℬ	BASE LINE
BOC	BACK OF CURB
BWF	BARBED WIRE FENCE
BFV	BUTTERFLY VALVE
CLF	CHAIN LINK FENCE
CF	CUBIC FEET
℄	CENTERLINE
CLR	CLEARANCE
CM	CONCRETE MONUMENT
CMP	CORRUGATED METAL PIPE
CONC	CONCRETE
CONN	CONNECT
CONT	CONTINUOUS
COR	CORNER
DFT	DRY FILM THICKNESS
DIA, d	DIAMETER
DI, DIP	DUCTILE IRON PIPE
D/W	DRIVEWAY
E	EAST
EL, ELEV	ELEVATION
EOP	EDGE OF PAVEMENT
ERC	EROSION CONTROL
EXIST/EX	EXISTING
FL	FLANGED
FM	FORCE MAIN
FND	FOUND
FPS	FEET PER SECOND
FT	FEET
FTB	FLOATING TURBIDITY BARRIER
GAL	GALLONS
GV	GATE VALVE
HDPE	HIGH DENSITY POLYETHYLENE
HR	HOUR
ID	IDENTIFICATION
INV	INVERT
IR	IRON ROD
LB	POUND
LSB	LICENSED SURVEYOR BUSINESS
LF	LINEAL FEET
LT	LEFT
MAX	MAXIMUM
MJ	MECHANICAL JOINT
MISC	MISCELLANEOUS
MIN	MINIMUM
NTS	NOT TO SCALE
OCEW	ON CENTER EACH WAY
OD	OUTSIDE DIAMETER
OH	OVERHEAD
OHL	OVERHEAD LINES
PE	PLAIN END
PRM	PERMANENT REFERENCE MARKER
PVC	POLYVINYL CHLORIDE
PSI	POUNDS PER SQUARE INCH
RCP	REINFORCED CONCRETE PIPE
RDCR	REDUCER
REQ'D	REQUIRED
RJ	RESTRAINED JOINT
R/W	RIGHT-OF-WAY
RWGV	RESILIENT WEDGE GATE VALVE W/ LOW ZINC STEM & NUT
RT	RIGHT
SCHD	SCHEDULE
SHT	SHEET
SQ.FT.	SQUARE FEET
SST, ST/STL	STAINLESS STEEL
STA	STATION
STS	STORM SEWER
TOB	TOP OF BANK
TOS	TOE OF SLOPE
TYP.	TYPICAL
W	WEST
W/	WITH
WM	POTABLE WATER MAIN

POST, BUCKLEY, SCHUH & JERNIGAN, INC., D/B/A/
PBSJ
PRINCIPAL ADDRESS:
2001 NW 107th AVENUE
MIAMI, FL 33172-2507
FBPR CERT. OF AUTH. No. 24
PRODUCTION ADDRESS:
2803 FRUITVILLE ROAD, STE 130
SARASOTA, FLORIDA 34237
Ph. (941) 954-4036

CLIENT
MANATEE COUNTY
PROJECT MANAGEMENT DEPARTMENT
1026 26th AVENUE EAST
BRADENTON, FLORIDA 34208

PROJECT
LENA ROAD LANDFILL
STORMWATER SYSTEM IMPROVEMENTS

TASK
GENERAL NOTES, LEGEND AND ABBREVIATIONS

ORIGINAL: JUNE, 03
REVISIONS:
1 HIGH DENSITY POLYETHYLENE
2
3
4
5

ENGINEER: JOHN M. JASH
REG. No. 45230
STATE OF FLORIDA
PROFESSIONAL ENGINEER

JOB NO. 120507.10
DRAWN JAS
DESIGNED JME
CHECKED JME
QC DAW

SHEET 2

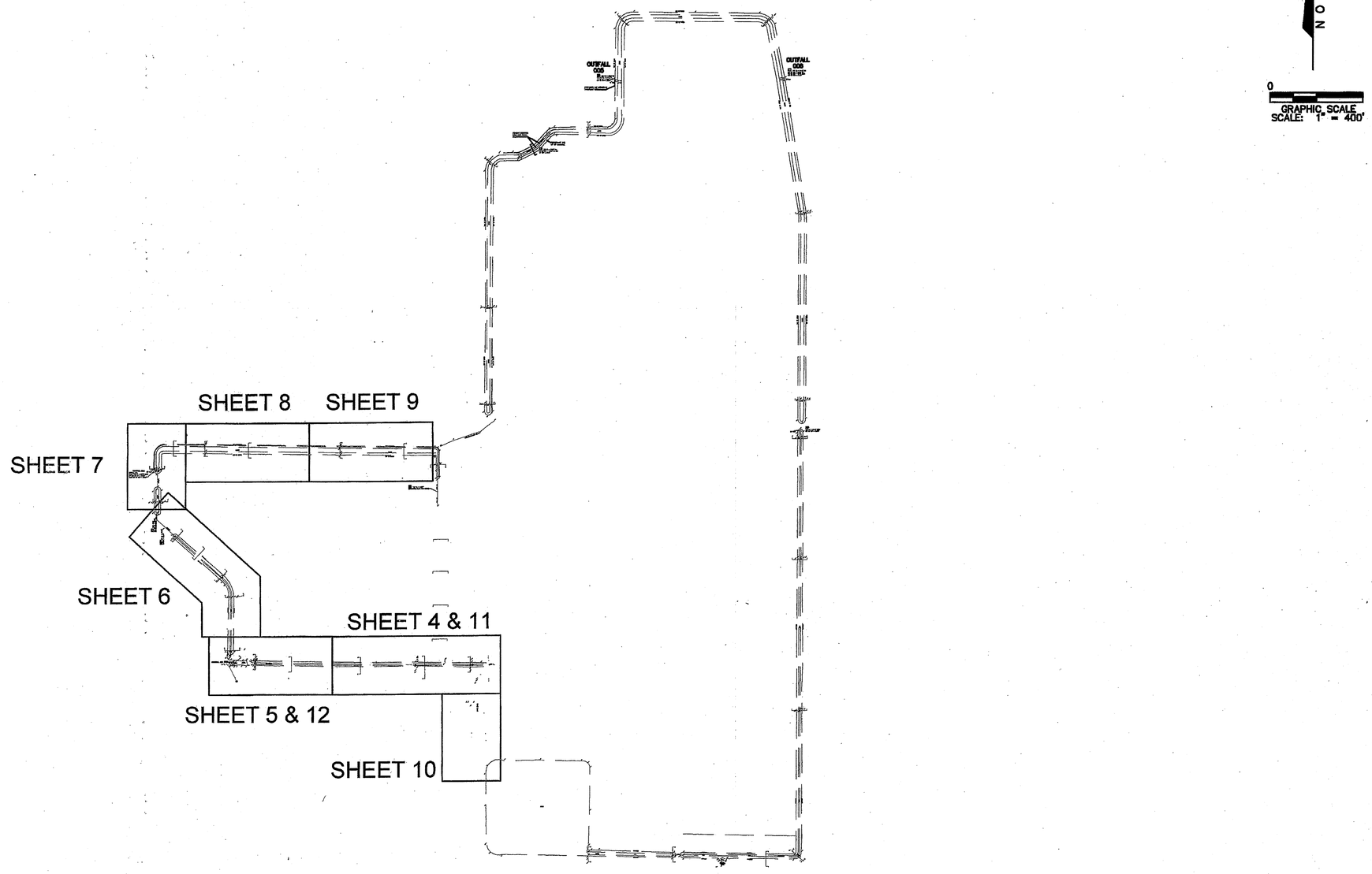

POST, BUCKLEY, SCHUH & JERNIGAN, INC., D/B/A/
PBSJ
PRINCIPAL ADDRESS:
2001 NW 107th AVENUE
MIAMI, FL 33172-2507
FBPR CERT. OF AUTH. No. 24
PRODUCTION ADDRESS:
2803 FRUITVILLE ROAD, STE 130
SARASOTA, FLORIDA 34237
Ph. (941) 954-4036

CLIENT
MANATEE COUNTY
PROJECT MANAGEMENT
DEPARTMENT

1026 26th AVENUE EAST
BRADENTON, FLORIDA 34208

MANATEE COUNTY FLORIDA

PROJECT
LENA ROAD LANDFILL
STORMWATER SYSTEM IMPROVEMENTS

TASK
KEY SHEET

ORIGINAL: JUNE, 03
REVISIONS:
1
2
3
4
5

ENGINEER: JOHN M. EASH
REG. No: 46935
STATE OF FLORIDA
LICENSED
No. 46935
PROFESSIONAL ENGINEER
SIGNING DATE

JOB NO. 120507.10
DRAWN JAS
DESIGNED JME
CHECKED JME
QC DAW

SHEET 3

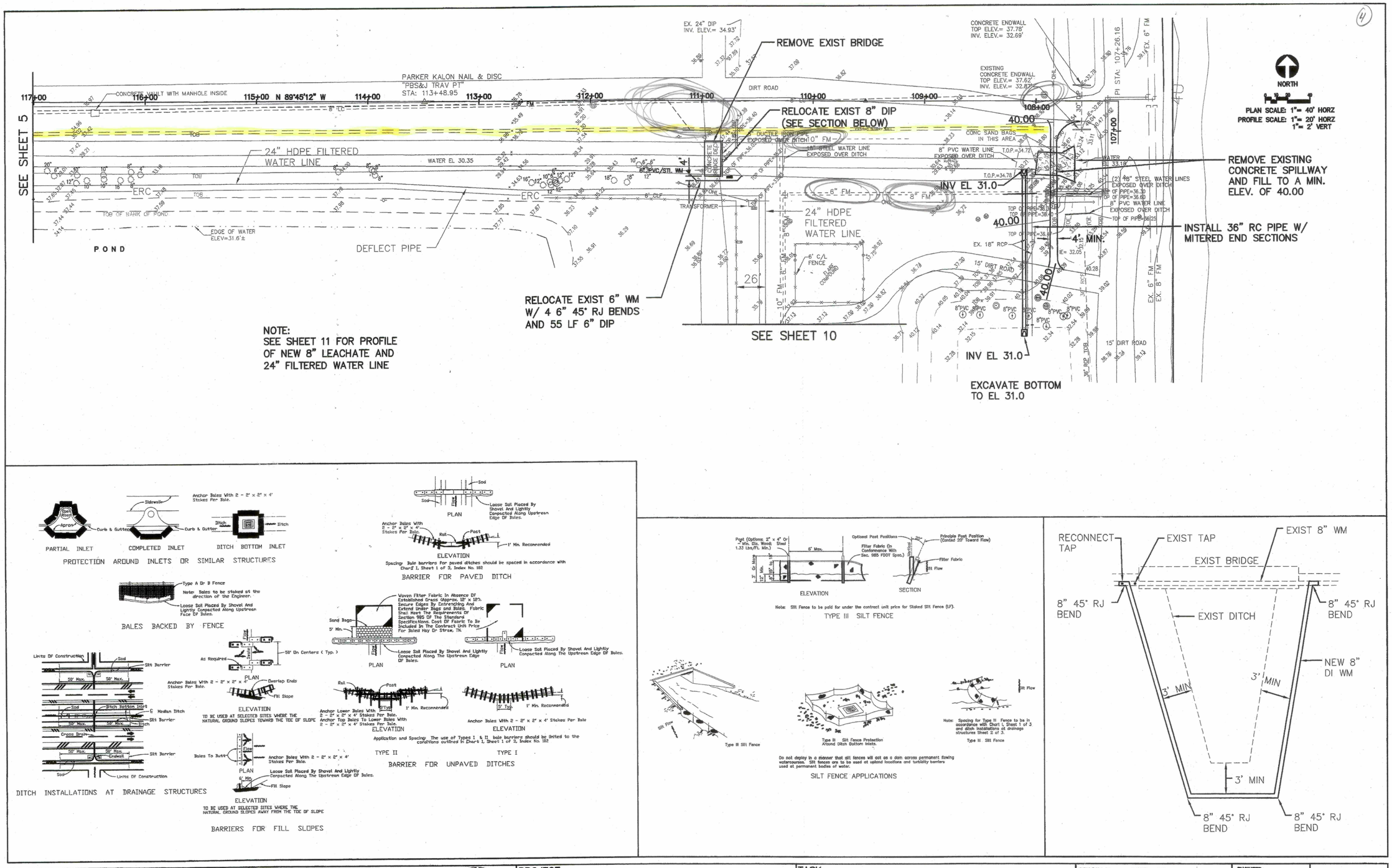

NOTE:
SEE SHEET 11 FOR PROFILE
OF NEW 8" LEACHATE AND
24" FILTERED WATER LINE

POST, BUCKLEY, SCHUH & JERNIGAN, INC., D/B/A/

PBSJ

PRINCIPAL ADDRESS:
2001 NW 107th AVENUE
MIAMI, FL 33172-2507
FBPR CERT. OF AUTH. No. 24

PRODUCTION ADDRESS:
2803 FRUITVILLE ROAD, STE 130
SARASOTA, FLORIDA 34237
Ph. (941) 954-4036

CLIENT
MANATEE COUNTY
PROJECT MANAGEMENT
DEPARTMENT

1026 26th AVENUE EAST
BRADENTON, FLORIDA 34208

MANATEE COUNTY FLORIDA

PROJECT
LENA ROAD LANDFILL
STORMWATER SYSTEM IMPROVEMENTS

TASK
STATION 107+26.16 TO 117+00

ORIGINAL: JUNE, 03
REVISIONS:
1
2
3
4
5

ENGINEER: JOHN M. EASH
REG. No.: 48235
STATE OF FLORIDA
PROFESSIONAL ENGINEER
DATE 6/1/05

JOB NO. 120507.10
DRAWN JAS
DESIGNED JME
CHECKED JME
QC DAW

SHEET 4

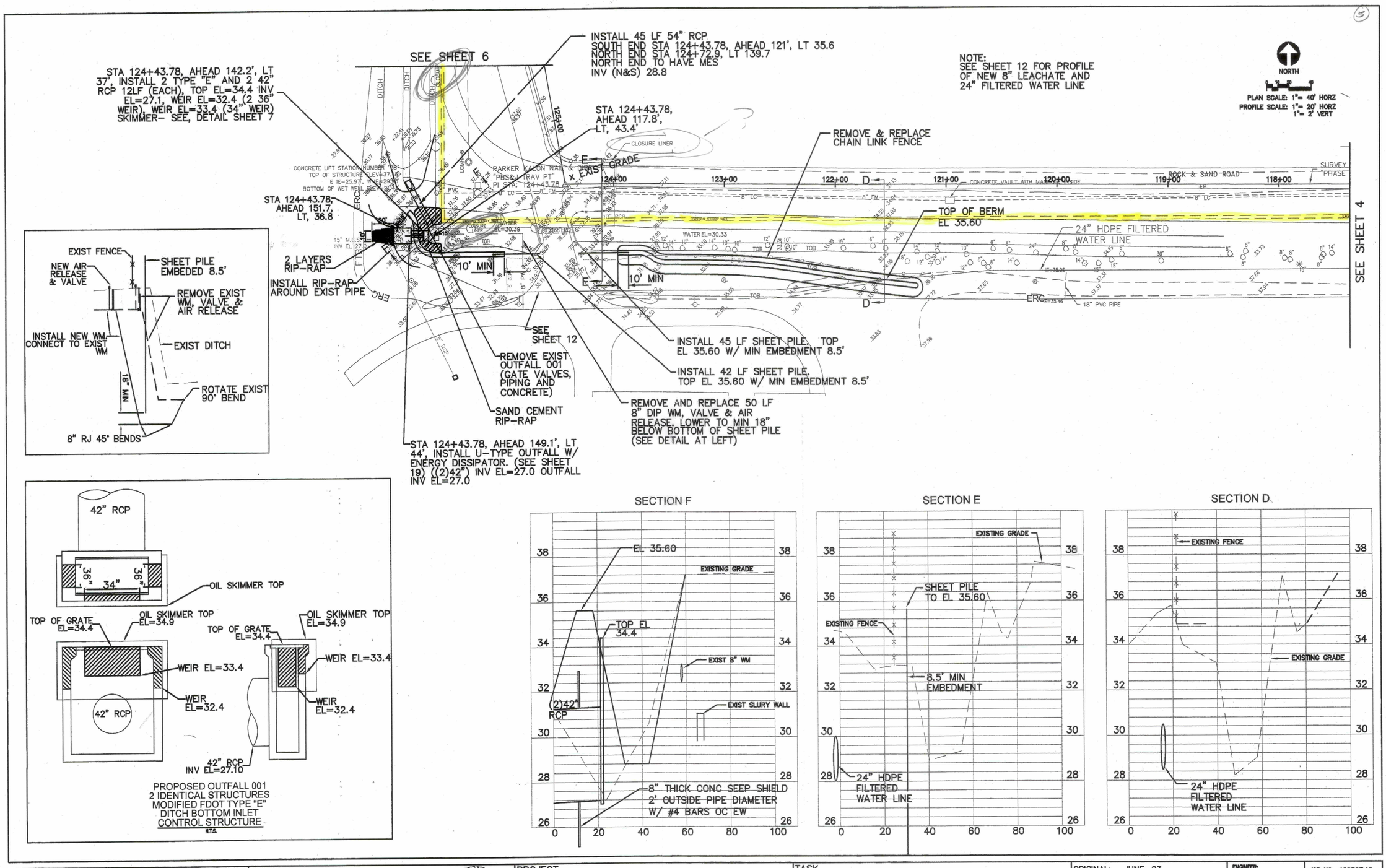

POST, BUCKLEY, SCHUH & JERNIGAN, INC., D/B/A/

PBSJ

PRINCIPAL ADDRESS:
2001 NW 107th AVENUE
MIAMI, FL 33172-2507
FBPR CERT. OF AUTH. No. 24

PRODUCTION ADDRESS:
2803 FRUITVILLE ROAD, STE 130
SARASOTA, FLORIDA 34237
Ph. (941) 954-4036

CLIENT
MANATEE COUNTY
PROJECT MANAGEMENT DEPARTMENT
1026 26th AVENUE EAST
BRADENTON, FLORIDA 34208

MANATEE COUNTY FLORIDA

PROJECT
LENA ROAD LANDFILL
STORMWATER SYSTEM IMPROVEMENTS

TASK
STATION 117+00 TO 125+50
& CROSS SECTIONS
D, E & F

ORIGINAL: JUNE, 03
REVISIONS:
1 SEPTEMBER, 04–FDEP COMMENTS
2
3
4
5

ENGINEER: JOHN M. EASH
REG. No.: 46335
DATE

JOB NO. 120507.10
DRAWN JAS
DESIGNED JME
CHECKED JME
QC DAW

SHEET 5

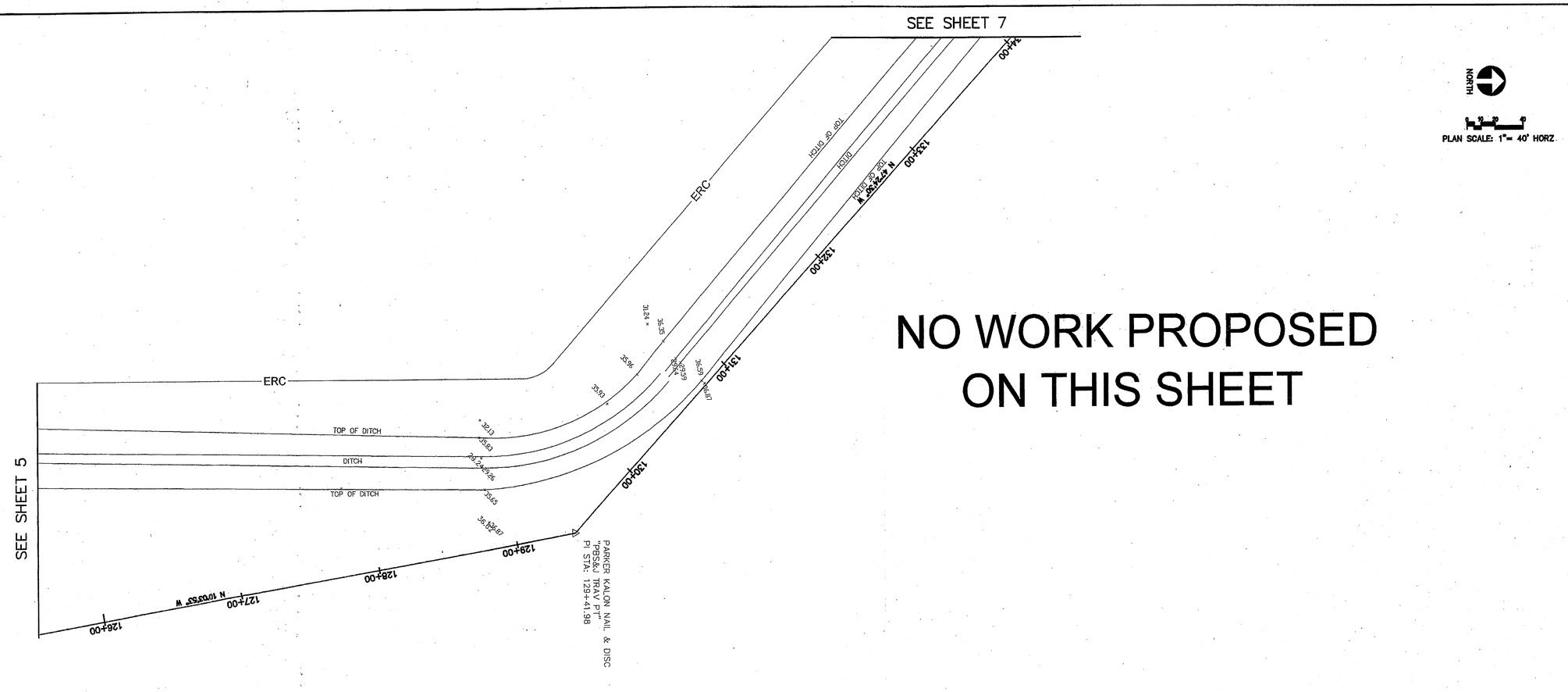

NO WORK PROPOSED ON THIS SHEET

POST, BUCKLEY, SCHUH & JERNIGAN, INC., D/B/A/ PBSJ PRINCIPAL ADDRESS: 2001 NW 107th AVENUE MIAMI, FL 33172-2507 FBPR CERT. OF AUTH. No. 24 PRODUCTION ADDRESS: 2803 FRUITVILLE ROAD, STE 130 SARASOTA, FLORIDA 34237 Ph. (941) 954-4036	CLIENT MANATEE COUNTY PROJECT MANAGEMENT DEPARTMENT 1026 26th AVENUE EAST BRADENTON, FLORIDA 34208	PROJECT LENA ROAD LANDFILL STORMWATER SYSTEM IMPROVEMENTS	TASK STATION 126+50 TO 134+00	ORIGINAL: JUNE, 03 REVISIONS: 1 SEPTEMBER, 04—FDEP COMMENTS 2 3 4 5	ENGINEER: JOHN M. EASH REG. No.: 48235 STATE OF FLORIDA DATE:

JOB NO. 120507.10
DRAWN JAS
DESIGNED JME
CHECKED JME
QC DAW
SHEET 6

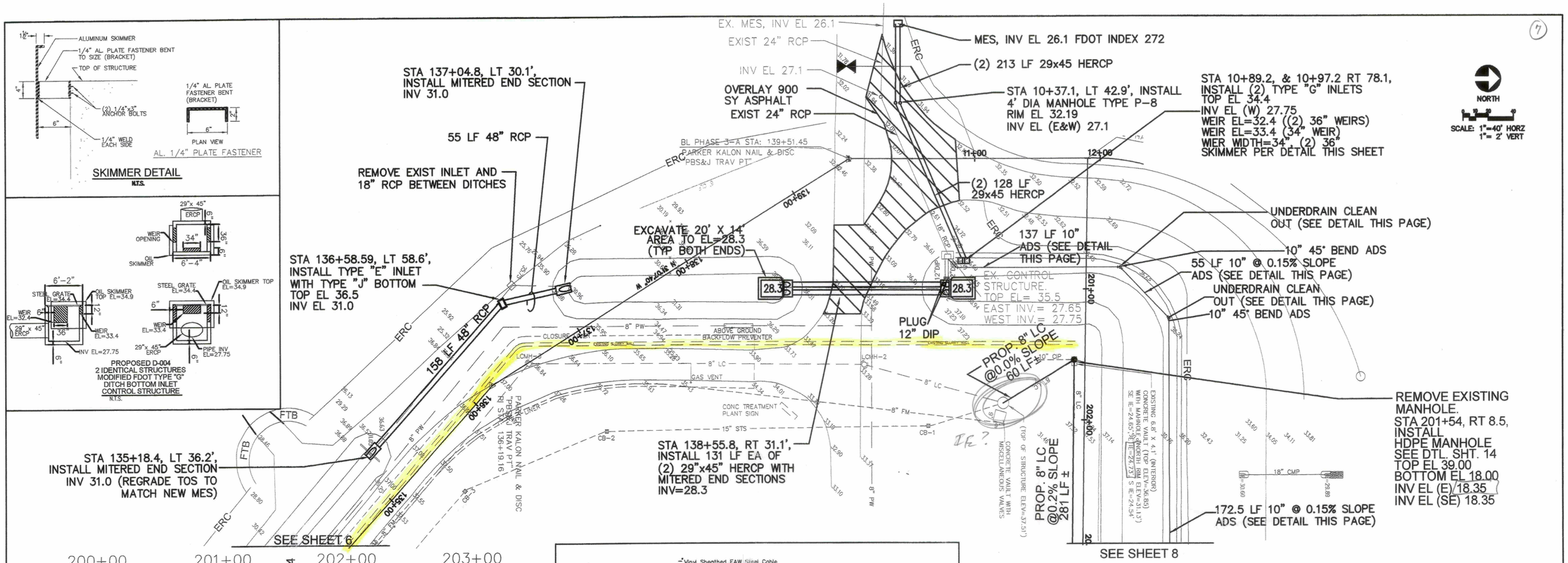

NOTE:
DEWATERING DISCHARGE FOR LEACHATE COLLECTION LINE INSTALLATION MUST BE KEPT INSIDE SLURRY WALL. IF CONTRACTOR STARTS AT EAST END, DISCHARGE CAN BE INTO EXISTING LEACHATE COLLECTION LINE IN ADVANCE OF CONSTRUCTION AREA.

FILTER GRADATION	
U.S. STD. SIEVE SIZE	PERCENT FINER BY WEIGHT
3/4"	100
3/8"	90–100
# 4	77–96
#10	60–87
#20	26–69
#40	9–43
#50	7–27
#100	5–7

POST, BUCKLEY, SCHUH & JERNIGAN, INC., D/B/A/
PBSJ
PRINCIPAL ADDRESS:
2001 NW 107th AVENUE
MIAMI, FL 33172-2507
FBPR CERT. OF AUTH. No. 24
PRODUCTION ADDRESS:
2803 FRUITVILLE ROAD, STE 130
SARASOTA, FLORIDA 34237
Ph. (941) 954-4036

CLIENT
MANATEE COUNTY PROJECT MANAGEMENT DEPARTMENT
1026 26th AVENUE EAST
BRADENTON, FLORIDA 34208

PROJECT
LENA ROAD LANDFILL
STORMWATER SYSTEM IMPROVEMENTS

TASK
STATION 134+00 TO 139+51.45
STATION 10+00 TO 11+90.12
STATION 200+00 TO 203+00

ORIGINAL: JUNE, 03
REVISIONS:
1
2
3
4
5

ENGINEER: JOHN M. EASH
REG. No. 42025
STATE OF FLORIDA
DATE

JOB NO. 120507.10
DRAWN JAS
DESIGNED JME
CHECKED JME
QC DAW

SHEET 7

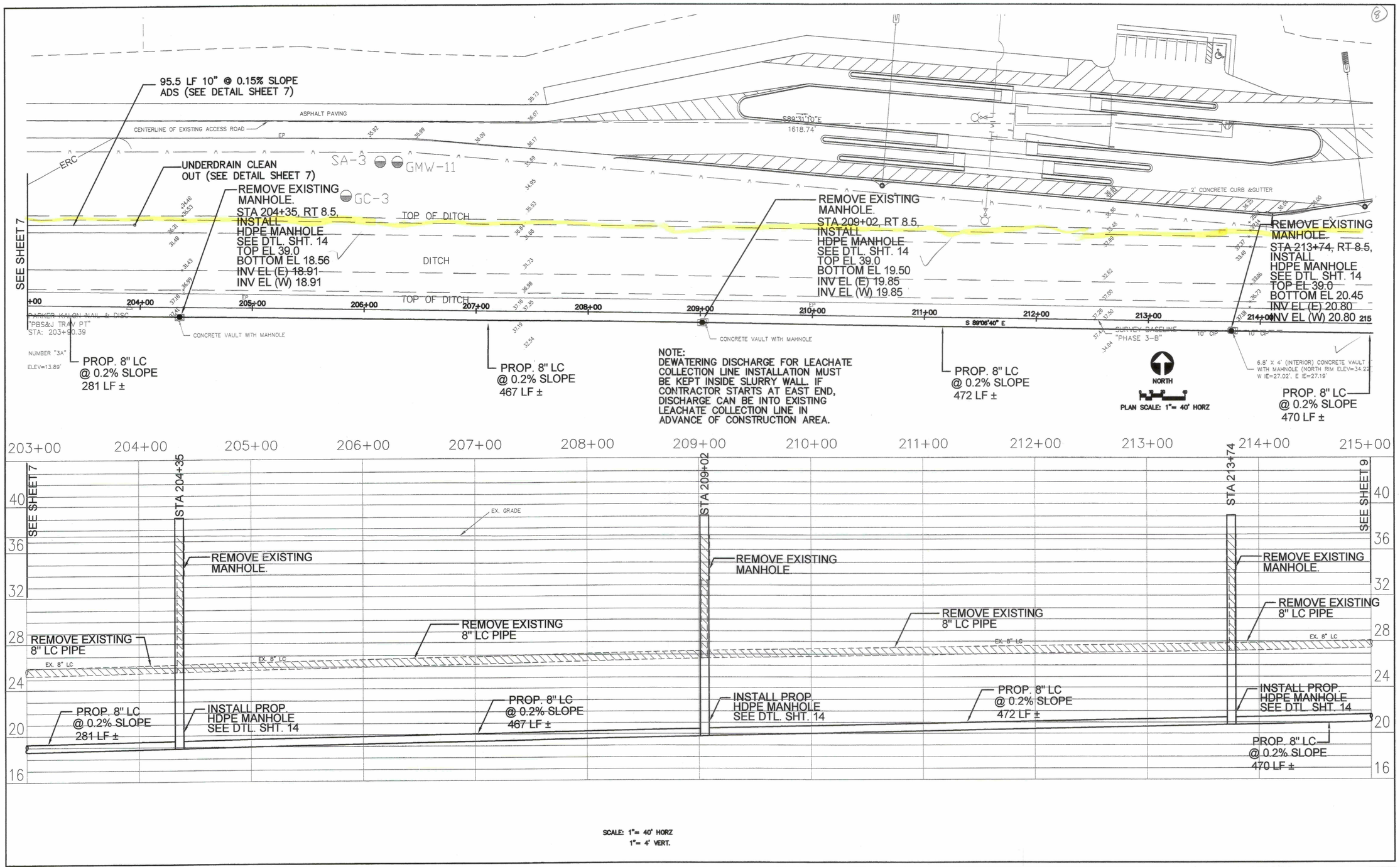

POST, BUCKLEY, SCHUH & JERNIGAN, INC., D/B/A/

PBSJ

PRINCIPAL ADDRESS:
2001 NW 107th AVENUE
MIAMI, FL 33172-2507
FBPR CERT. OF AUTH. No. 24

PRODUCTION ADDRESS:
2803 FRUITVILLE ROAD, STE 130
SARASOTA, FLORIDA 34237
Ph. (941) 954-4036

CLIENT
MANATEE COUNTY
PROJECT MANAGEMENT
DEPARTMENT

1026 26th AVENUE EAST
BRADENTON, FLORIDA 34208

MANATEE COUNTY FLORIDA

PROJECT
LENA ROAD LANDFILL
STORMWATER SYSTEM IMPROVEMENTS

TASK
STATION 203+00 TO 215+00

ORIGINAL: JUNE, 03
REVISIONS:
1
2
3
4
5

ENGINEER: JOHN M. EASH
REG. No.: 33235
STATE OF FLORIDA
PROFESSIONAL ENGINEER
DATE:

JOB NO. 120507.10
DRAWN JAS
DESIGNED JME
CHECKED JME
QC DAW

SHEET 8

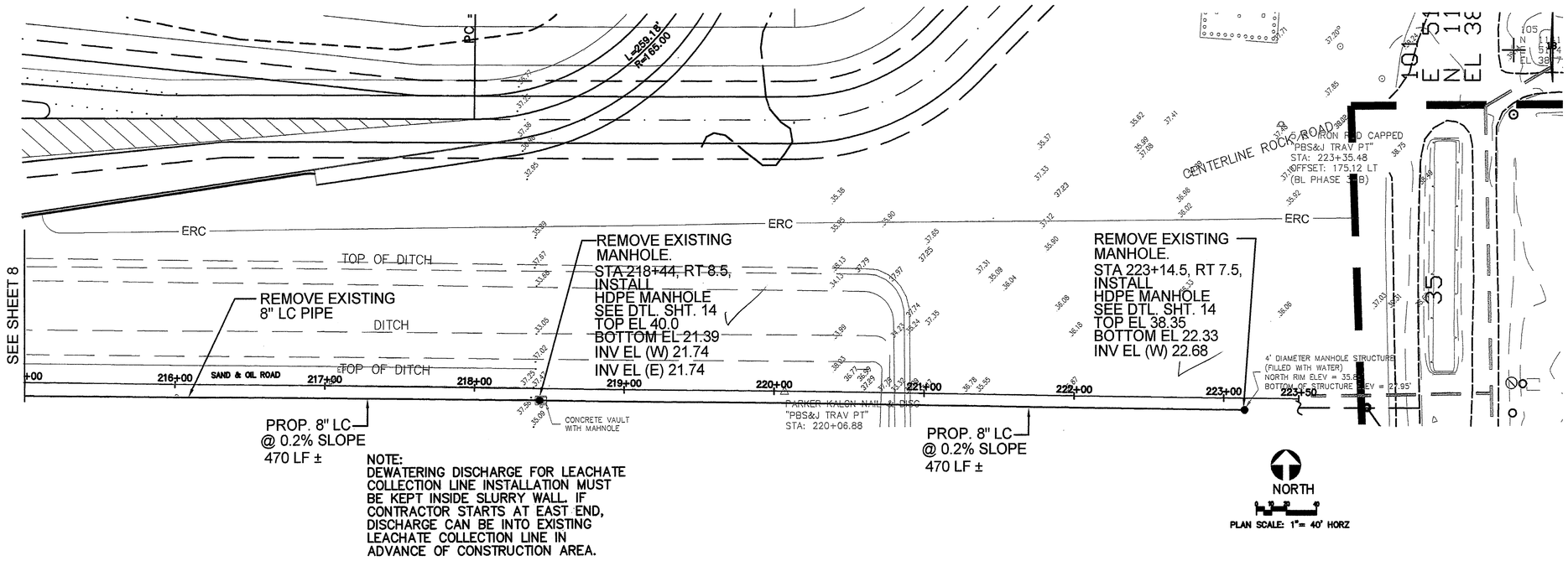

NOTE:
DEWATERING DISCHARGE FOR LEACHATE COLLECTION LINE INSTALLATION MUST BE KEPT INSIDE SLURRY WALL. IF CONTRACTOR STARTS AT EAST END, DISCHARGE CAN BE INTO EXISTING LEACHATE COLLECTION LINE IN ADVANCE OF CONSTRUCTION AREA.

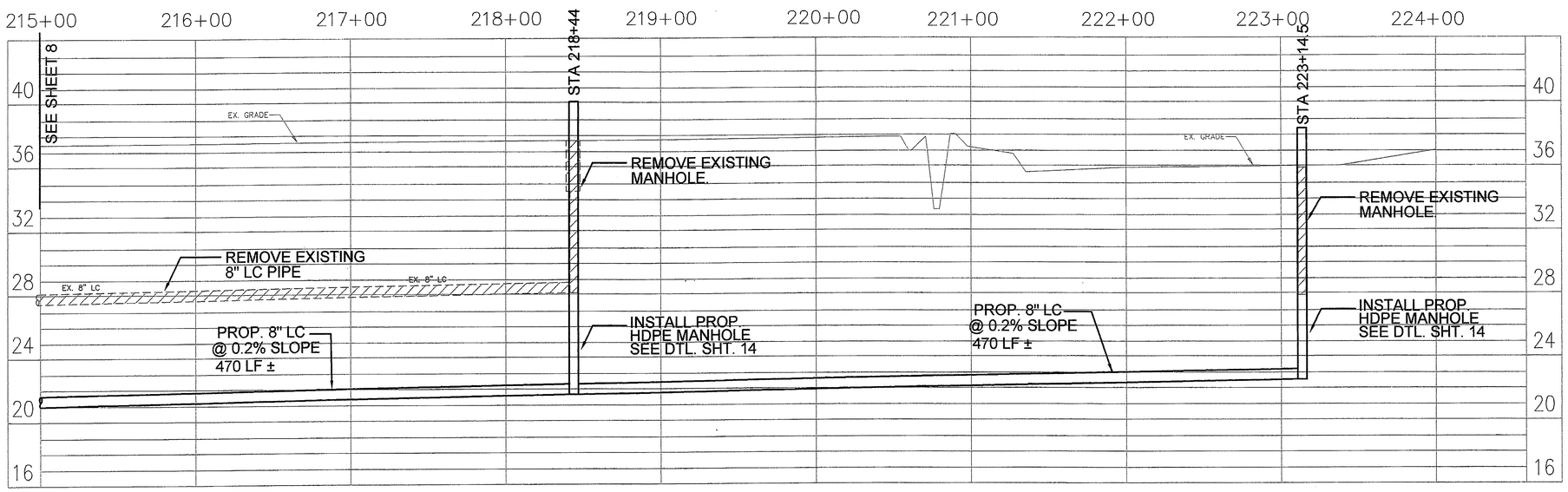

SCALE: 1"= 40' HORZ
1"= 4' VERT.

POST, BUCKLEY, SCHUH & JERNIGAN, INC., D/B/A/
PBSJ
PRINCIPAL ADDRESS:
2001 NW 107th AVENUE
MIAMI, FL 33172-2507
FBPR CERT. OF AUTH. No. 24
PRODUCTION ADDRESS:
2803 FRUITVILLE ROAD, STE 130
SARASOTA, FLORIDA 34237
Ph. (941) 954-4036

CLIENT
MANATEE COUNTY
PROJECT MANAGEMENT DEPARTMENT
1026 26th AVENUE EAST
BRADENTON, FLORIDA 34208

PROJECT
LENA ROAD LANDFILL
STORMWATER SYSTEM IMPROVEMENTS

TASK
STATION 215+00 TO 221+00

ORIGINAL: JUNE, 03
REVISIONS:
1
2
3
4
5

ENGINEER: JOHN M. EASH
REG. No.
DATE

JOB NO. 120507.10
DRAWN JAS
DESIGNED JME
CHECKED JME
QC DAW

SHEET 9

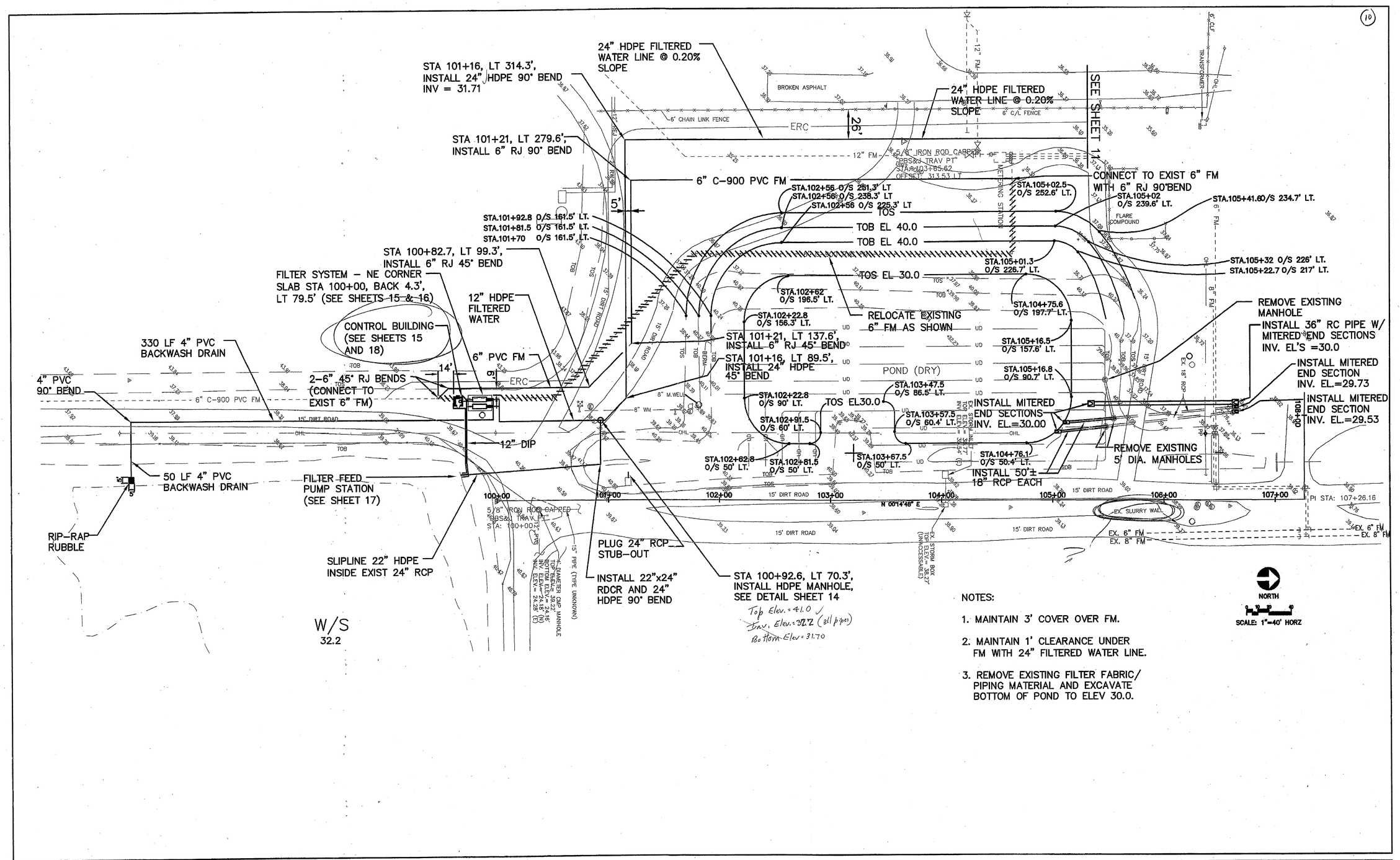

NOTES:

1. MAINTAIN 3' COVER OVER FM.
2. MAINTAIN 1' CLEARANCE UNDER FM WITH 24" FILTERED WATER LINE.
3. REMOVE EXISTING FILTER FABRIC/ PIPING MATERIAL AND EXCAVATE BOTTOM OF POND TO ELEV 30.0.

POST, BUCKLEY, SCHUH & JERNIGAN, INC., D/B/A/
PBSJ
PRINCIPAL ADDRESS:
2001 NW 107th AVENUE
MIAMI, FL 33172-2507
FBPR CERT. OF AUTH. No. 24
PRODUCTION ADDRESS:
2803 FRUITVILLE ROAD, STE 130
SARASOTA, FLORIDA 34237
Ph. (941) 954-4036

CLIENT
MANATEE COUNTY
PROJECT MANAGEMENT DEPARTMENT
1026 26th AVENUE EAST
BRADENTON, FLORIDA 34208

PROJECT
LENA ROAD LANDFILL
STORMWATER SYSTEM IMPROVEMENTS

TASK
FILTER SYSTEM, FILTERED WATER LINE
AND DETENTION POND

ORIGINAL: APRIL, 03
REVISIONS:
1
2
3
4
5

ENGINEER: JOHN M. EASH
REG. No.: 46335
STATE OF FLORIDA
PROFESSIONAL ENGINEER
DATE

JOB NO. 120507.10
DRAWN JAS
DESIGNED JME
CHECKED JME
QC DAW

SHEET 10

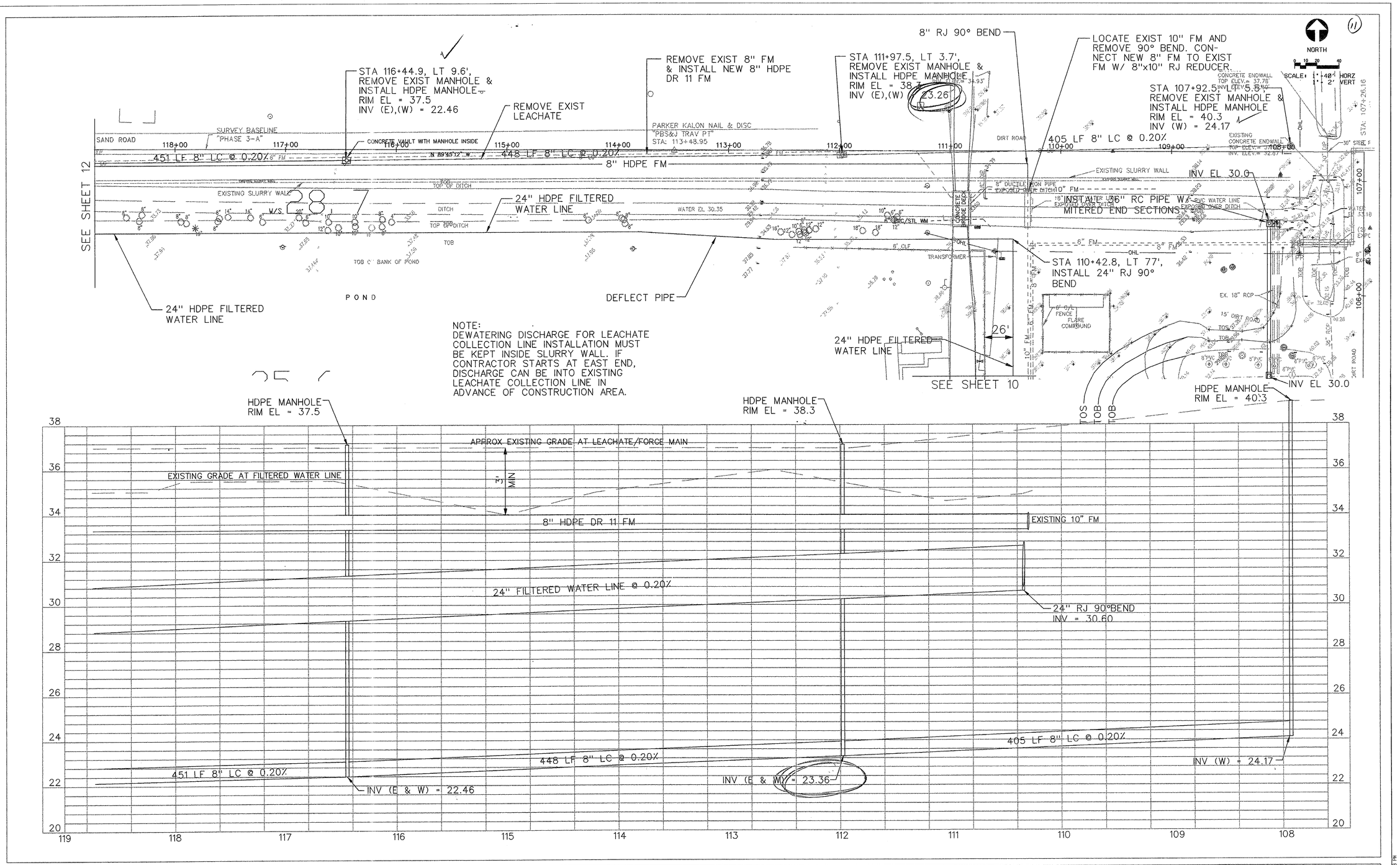

POST, BUCKLEY, SCHUH & JERNIGAN, INC., D/B/A/

PBSJ

PRINCIPAL ADDRESS:
2001 NW 107TH AVENUE
MIAMI, FL. 33172-2507
FBPR CERT. OF AUTH. NO. 24

PRODUCTION ADDRESS:
2803 FRUITVILLE ROAD, STE 130
SARASOTA, FLORIDA 34237
PH. (941) 954-4036

CLIENT
MANATEE COUNTY
PROJECT MANAGEMENT DEPARTMENT
1026 26th AVENUE EAST
BRADENTON, FLORIDA 34208

MANATEE COUNTY FLORIDA

PROJECT
LENA ROAD LANDFILL
STORMWATER SYSTEM IMPROVEMENTS

TASK
FILTERED WATER LINE, LEACHATE COLLECTION AND FM
PLAN AND PROFILE

ORIGINAL: APRIL, 03
REVISIONS:
1 SEPTEMBER, 04-FDEP COMMENTS
2
3
4
5

ENGINEER: JOHN M. EASH
REG. NO. 46837
STATE OF FLORIDA
DATE

JOB NO. 120507.10
DRAWN JAS
DESIGNED JME
CHECKED JME
QC DAW

SHEET 11

...\SHT11.dwg 06/13/2005 02:49:48 PM

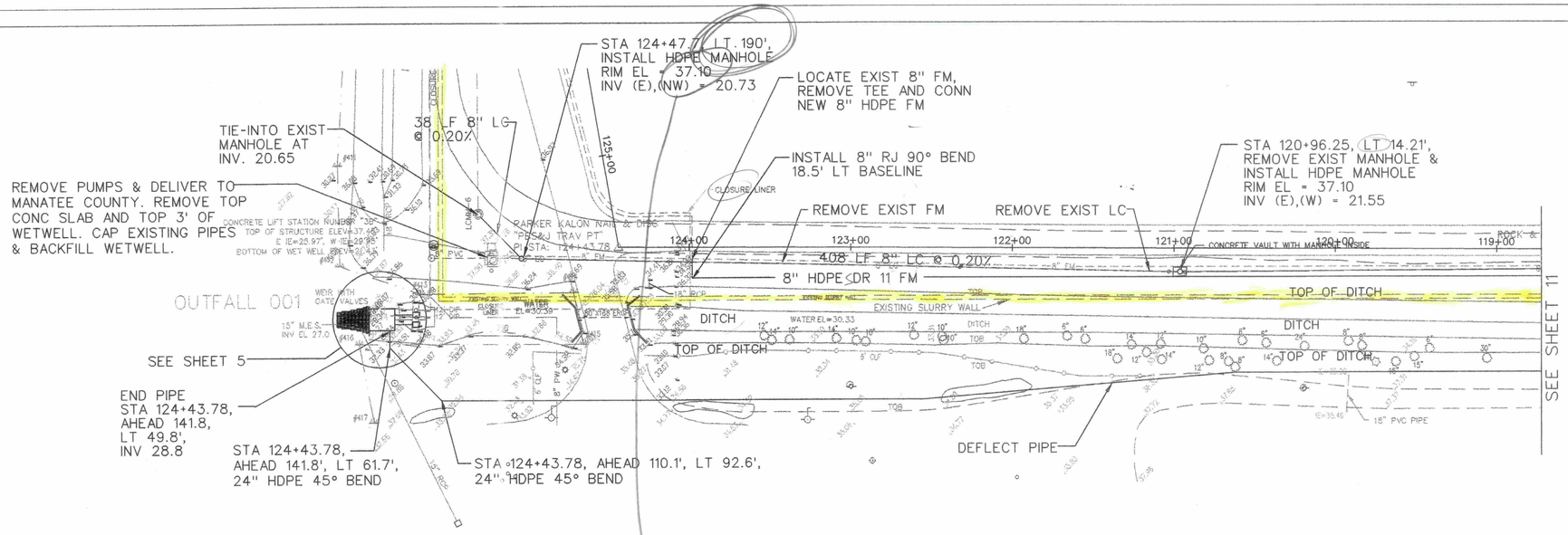

NORTH

SCALE: 1"=40' HORZ
1"= 2' VERT

NOTE:
DEWATERING DISCHARGE FOR LEACHATE COLLECTION LINE INSTALLATION MUST BE KEPT INSIDE SLURRY WALL. IF CONTRACTOR STARTS AT EAST END, DISCHARGE CAN BE INTO EXISTING LEACHATE COLLECTION LINE IN ADVANCE OF CONSTRUCTION AREA.

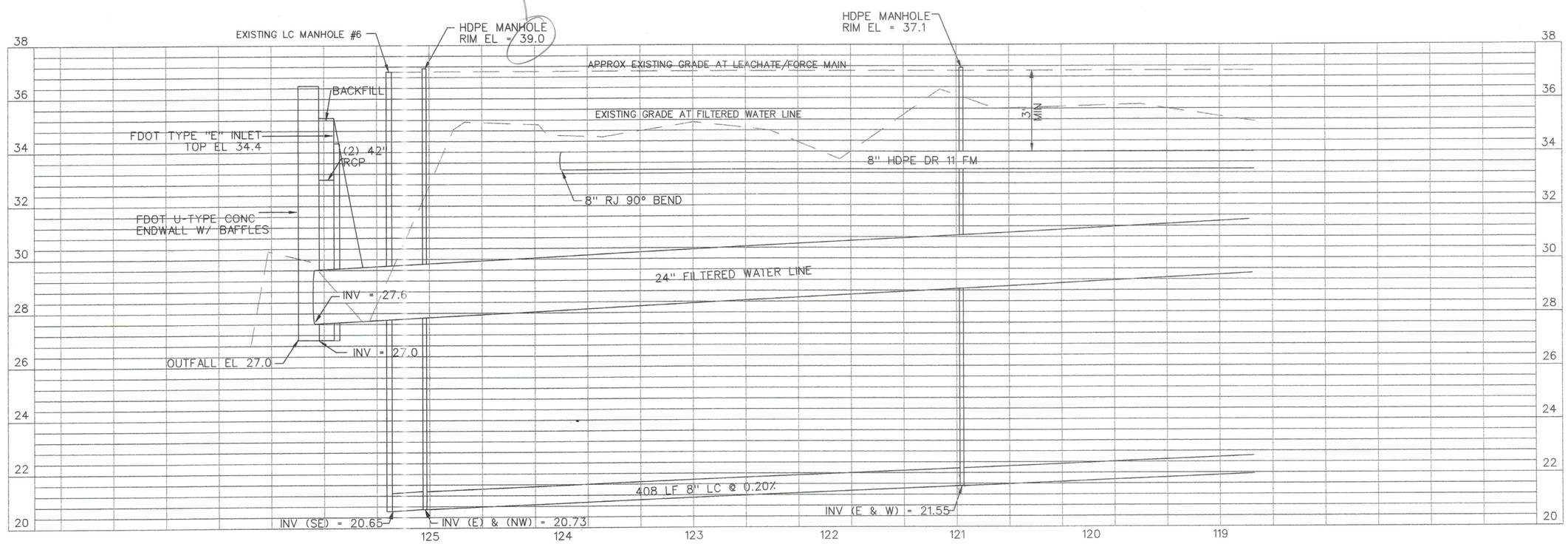

POST, BUCKLEY, SCHUH & JERNIGAN, INC., D/B/A/
PBSJ
PRINCIPAL ADDRESS:
2001 NW 107TH AVENUE
MIAMI, FL. 33172-2507
FBPR CERT. OF AUTH. NO. 24
PRODUCTION ADDRESS:
2003 FRUITVILLE ROAD, STE 130
SARASOTA, FLORIDA 34237
PH. (941) 954-4036

CLIENT
MANATEE COUNTY
PROJECT MANAGEMENT DEPARTMENT
1026 26th AVENUE EAST
BRADENTON, FLORIDA 34208

MANATEE COUNTY FLORIDA

PROJECT
LENA ROAD LANDFILL
STORMWATER SYSTEM IMPROVEMENTS

TASK
FILTERED WATER LINE, LEACHATE COLLECTION AND FM
PLAN AND PROFILE

ORIGINAL: APRIL, 03
REVISIONS:
1 SEPTEMBER, 04-SWFWMD COMMENTS
2
3
4
5

ENGINEER: JOHN M. EASH
REG. NO. 46836
STATE OF FLORIDA
PROFESSIONAL ENGINEER
DATE

JOB NO. 120507.10
DRAWN JAS
DESIGNED JME
CHECKED JME
QC DAW

SHEET 12

...\SH12.dwg 06/13/2005 04:15:05 PM

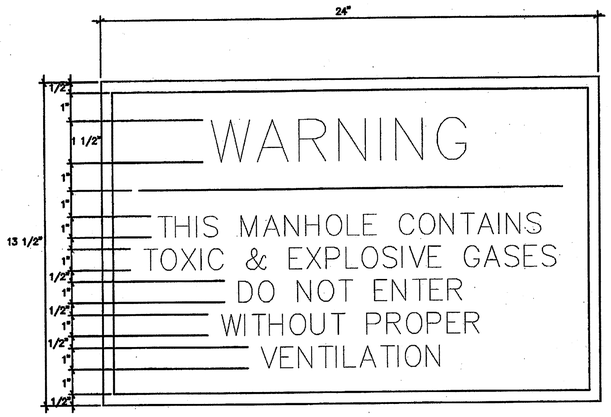

NOTES:

1. THE COLOR OF THE SIGN SHALL BE HIGH INTENSITY SILVER-WHITE REFLECTORIZED BACKGROUND WITH RED OPAQUE BORDER AND LEGEND. SIGN PANEL SHALL BE 0.08" MIN THICK ALUMINUM. PANELS ARE TO BE DEGREASED, ETCHED, NEUTRALIZED AND TREATED WITH ALODINE 1200, IRIDINE 14-2, BONDERITE 721 OR EQUAL. NO STENCILING PERMITED ON PANELS.
2. REMOVE AND RESET EXISTING SIGNS AS AVAILABLE.
3. INSTALL NEW SIGNS (ONE PER MANHOLE) AS REQUIRED.
4. ALL SIGNS TO BE INSTALLED PER DETAIL.

MANHOLE SIGN DETAIL

NTS

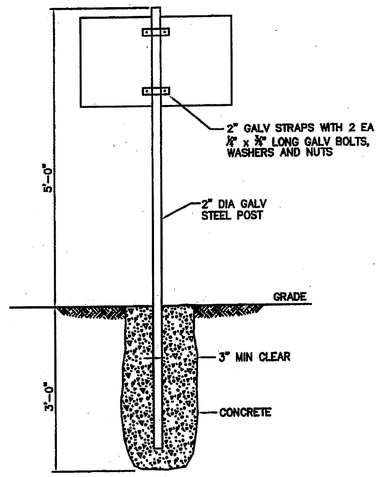

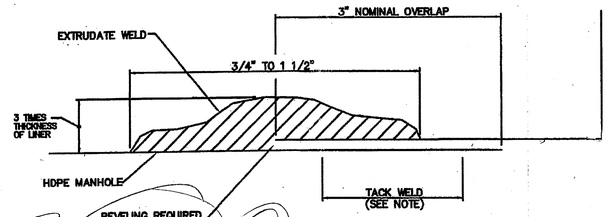

BEVELING REQUIRED WHEN LINER THICKNESS IS 60 MIL OR GREATER

NOTE:
LINER/MANHOLE TACK WELDED TOGETHER AT OVERLAP TO FORM TEMPORARY BOND PRIOR TO WELDING

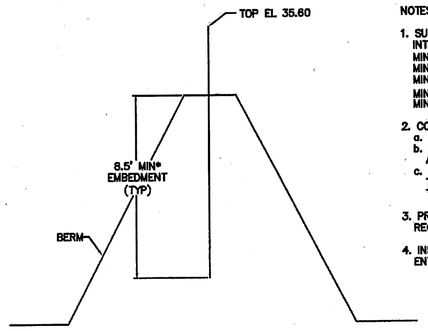

NOTES:

1. SUPPLY AND INSTALL:
   INTERLOCKING CONTINUOUS SHEET STEEL PILING
   MINIMUM YIELD STRENGTH PER ASTM A328 (fy = 38 kis)
   MINIMUM MOMENT OF INERTIA = 2.80 IN4 PER FOOT OF SHEET
   MINIMUM SECTION MODULUS = 2.4 IN3 PER PILE
   MINIMUM WEB THICKNESS =3/8"
   MINIMUM WEIGHT 28.0 POUNDS PER SQUARE FOOT OF SHEET
2. COATING: PROVIDE A COAL TAR EPOXY CORROSION RESISTANT COATING SYSTEM AS FOLLOWS:
   a. SURFACE PREPARATION: SSPC-SP10, COMMERCIAL BLAST CLEANING
   b. PRIME COAT: EPOXY BASED RUST INHIBITIVE PRIME COAT COMPATIBLE WITH THE FINISH COATS AND RECOMMENDED BY THE COAL TAR EPOXY COATING MANUFACTURER
   c. FINISH COATS: TWO-COMPONENT COAL TAR EPOXY-POLYAMIDE BLACK COATING CONFORMING TO THE REQUIREMENTS OF THE CORPS OF ENGINEERS SPECIFICATION C-200, APPLIED IN TWO COATS TO A MINIMUM TOTAL DRY FILM THICKNESS OF 16 MILS
3. PREPARE THE SURFACES AND APPLY THE COATING SYSTEM IN FULL COMPLIANCE WITH THE RECOMMENDATIONS AND WRITTEN INSTRUCTIONS OF THE COATING MANUFACTURER
4. INSTALL PILES IN A PLUMB POSITION WITH EACH PILE INTERLOCKED WITH ADJOINING PILES FOR ITS ENTIRE LENGTH TO FORM A CONTINUOUS DIAPHRAGM THROUGHOUT THE LENGTH OF EACH RUN OF WALL

SHEET PILE DETAIL

NTS

NOTES:

1.) USE OF TYPE A-2 AND A-3 PIPE BEDDING TO BE DETERMINED IN THE FIELD BY THE ENGINEER.
2.) 10" MAX. FOR PIPE DIAMETERS LESS THAN 24"; 12" MAX. FOR PIPE DIAMETER 24" AND LESS THAN 42"; 24" MAX. FOR PIPE DIAMETER 42" AND OVER.
3.) 4" MAX. FOR PIPE 16" DIAMETER & LESS; 6" MAX. FOR PIPE 18" TO 36" DIAMETER; AND 9" MAX. FOR PIPE 42" DIAMETER AND LARGER.
4.) INSTALLATION SHALL BE IN ACCORDANCE WITH THE MANUFACTURER'S SPECIFICATIONS.
5.) WEARING SURFACE TO BE SAME TYPE & THICKNESS (1 1/2" MIN.) AS EXISTING PAVEMENT.
6.) SHEETING ORDERED LEFT IN PLACE TO BE CUT OFF 24" BELOW FINISH GRADE OR 12" BELOW SUBGRADE
7.) BASE SHALL BE 6" MINIMUM THICKNESS SAND ASPHALT OR APPROVED EQUAL.
8.) BACKFILL AASHTO M-145 SHALL BE PLACED IN LAYERS NOT TO EXCEED 6 INCHES. EACH LAYER SHALL BE THOROUGHLY TAMPED AND/OR ROLLED TO 98% AASHTO T-180 DENSITY.
9.) TEMPORARY PATCHES WILL BE INSTALLED TO PROVIDE A SMOOTH ALL WEATHER SURFACE AT ALL TIMES. PERMANENT REPLACEMENT TO BE MADE AS SOON AS POSSIBLE.
10.) NOTES 5.) THRU 9.) ARE MINIMUM REQUIREMENTS. REFER TO MANATEE COUNTY TRANSPORTATION DEPARTMENT STANDARDS FOR ADDITIONAL REQUIREMENTS.

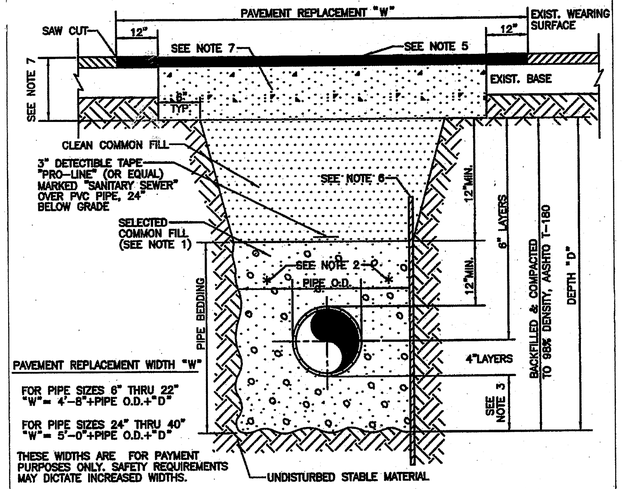

MANATEE COUNTY PUBLIC WORKS DEPARTMENT		TRENCH DETAIL	US-12
REV.BY / DATE	MARCH 18, 1997 DATE OF APPROVAL	ASPH. PAVEMENT SURFACE TYPE A-1 PIPE BEDDING	

POST, BUCKLEY, SCHUH & JERNIGAN, INC., D/B/A/
PBSJ
PRINCIPAL ADDRESS:
2001 NW 107th AVENUE
MIAMI, FL 33172-2507
FBPR CERT. OF AUTH. No. 24
PRODUCTION ADDRESS:
2803 FRUITVILLE ROAD, STE 130
SARASOTA, FLORIDA 34237
Ph. (941) 954-4036

CLIENT
MANATEE COUNTY
PROJECT MANAGEMENT DEPARTMENT
1026 26th AVENUE EAST
BRADENTON, FLORIDA 34208

PROJECT
LENA ROAD LANDFILL
STORMWATER SYSTEM IMPROVEMENTS

TASK
DETAILS

ORIGINAL: JUNE, 03
REVISIONS:
1 SEPTEMBER, 04-SWFWMD COMMENTS
2
3
4
5

ENGINEER: JOHN M. EASH
REG. No.: 48235
STATE OF FLORIDA
PROFESSIONAL ENGINEER

JOB NO. 120507.10
DRAWN JAS
DESIGNED JME
CHECKED JME
QC DAW
SHEET 13

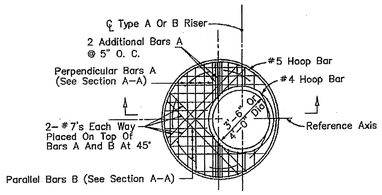

NOTE: Not Applicable For Type C, D & E Ditch Bottom Inlets. See Index No. 232.

TOP SLAB REINFORCING STEEL DIAGRAM

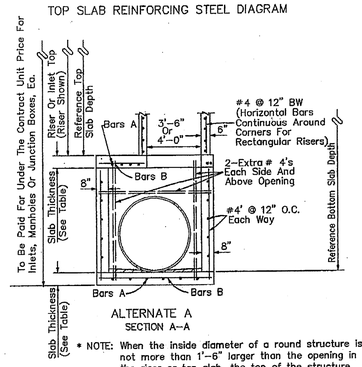

ALTERNATE A
SECTION A-A

* NOTE: When the inside diameter of a round structure is not more than 1'-6" larger than the opening in the riser or top slab, the top of the structure or riser shall be constructed according to the "Special Top Slab" details on this sheet.

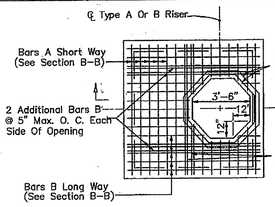

TOP SLAB REINFORCING STEEL DIAGRAM

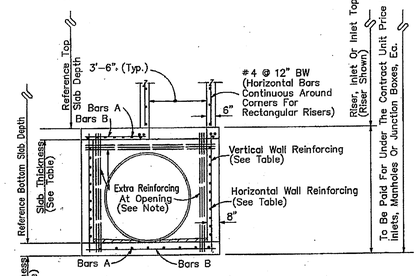

ALTERNATE B
SECTION B-B

NOTE: Provide extra reinforcing each side of each opening at 3" maximum spacing equal to half the area of vertical reinforcement removed by the opening and provide the same area of reinforcement above each opening at 3" maximum spacing as removed by the opening.

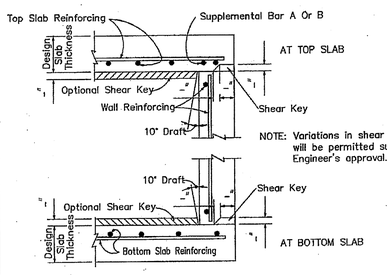

NOTE: Variations in shear key dimensions will be permitted subject to the Engineer's approval.

SLAB TO WALL DETAILS FOR PRECAST ALTERNATE WITH 8" WALLS

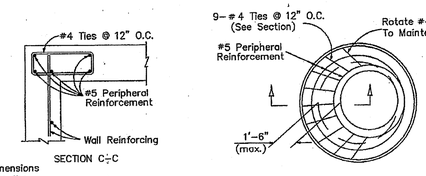

SPECIAL TOP SLAB*

GENERAL NOTES

1. Standard structure bottoms 4'-0" diameter and smaller (Alt. A) and 3'-6" square (Alt. B) are designated Type P. Larger standard structure bottoms are designated Type J. Risers are permitted for all structures.
2. Walls of circular structures (Alternate A) constructed in place may be of non-reinforced concrete or brick or reinforced concrete. Precast and rectangular structures (Alternate B) shall be constructed of reinforced concrete only.
3. Wall thickness and reinforcement are for either reinforced cast-in-place or precast concrete units except that precast circular units may be furnished with walls in accordance with either A.S.T.M. C-478 (up to 96" diameter) or A.S.T.M. C-76, Class II, B Wall, modified where the elliptical steel cage area is placed in the center one-third of the wall.
4. Top and floor slab thickness and reinforcement are for precast and cast in place construction. Top and floor slabs shall be of Class II concrete. Concrete as specified in A.S.T.M. C-478 (4000 psi) may be used in lieu of Class I and Class II concrete in precast items manufactured in plants which are under the "Standard Operating Procedures" for the inspection of precast drainage products.
5. All reinforcement shown is A.S.T.M. A615/A615m Grade 60 steel, either smooth or deformed. Equivalent area Grade 40 steel or Grade 65KSI welded wire fabric may be substituted according to Index No. 201.
6. Structure bottoms may be used in conjunction with curb inlet tops Types 1, 2, 3, 4, 5, 6, 9, and 10, and any manhole or junction box unless otherwise shown in the plans or other standard drawings. Alt. B structure bottoms may be used in conjunction with curb inlet Types 7 & 8, or any ditch bottom inlet unless otherwise shown in the plans or other standard drawings.
7. Rectangular structures may be rotated as directed by the Engineer in order to facilitate connections between the structure walls and storm sewer pipes.
8. Except when ACI hooks are specifically required, reinforcement top and bottom slabs shall be straight embedment.
9. All steel bars shall have 1 1/2" minimum cover unless otherwise shown except for precast circular units manufactured under ASTM C76 OR ASTM C478. Horizontal steel in rectangular structures shall be lapped a minimum of 24 diameters at corners.
10. The corner fillets shown are necessary for rectangular structures used with circular risers and inlet throats and used on skew with rectangular risers, inlet and inlet throats. Fillets will be required in lieu of the bottom slab of the Alt. B riser when used with the Alt. A box. Each fillet shall be reinforced with 2-#5 bars.
11. Inlet throats, riser or manhole tops shall be secured to structures as shown on Index No. 201.
12. Structures with depths over 14' are to be checked for floatation by designer of project drainage.
13. Units larger than specified standard may be substituted at the contractor's option when these units will not cause or increase the severity of utility conflicts. Such larger units shall be furnished at no additional cost to the Department. Larger Alternate A units cannot replace Alternate B units without approval of the Engineer. This note applies to this Index only.
14. For manhole and junction box tops, for frames and covers, and, for supplementary details see Index No. 201.

SLAB DESIGNS – SQUARE AND RECTANGULAR STRUCTURES

(ALL SLABS 8" THICK – REINFORCING PARALLEL TO SHORT WAY AND LONG WAY)

SHORT-WAY SLAB DEPTH	SHORT-WAY SCHEDULE	LONG-WAY SLAB DEPTH	LONG-WAY SCHEDULE
SIZE: 3'-6"x UNLIMITED			
≥0.5' < 29'	B	≥0.5'-40'	B
29'-40'	C		
SIZE: 4'-0"x UNLIMITED			
≥0.5' < 19'	B	≥0.5' < 34'	B
19' < 29'	C	34'-40'	C
29'-40'	D		
SIZE: 5'x5'			
≥0.5' < 3'	C	≥0.5' < 3'	C
3' < 19'	B	3' < 19'	B
19' < 28'	C	19' < 28'	C
28' < 38'	D	28' < 38'	D
38'-40'	F	38'-40'	F
SIZE: 5'x6'			
≥0.5' < 3'	C	≥0.5' < 3'	C
3' < 16'	B	3' < 20'	B
16' < 24'	C	20' < 29'	C
24' < 34'	D	29'-40'	D
34'-40'	F		
SIZE: 5'x7'			
≥0.5' < 3'	C	≥0.5' < 3'	C
3' < 14'	B	3' < 22'	B
14' < 21'	C	22' < 33'	C
21' < 39'	D	33'-40'	D
39'-40'	F		
SIZE: 5'x8'			
≥0.5' < 3'	C	≥0.5' < 39'	B
3' < 8'	B	39'-40'	C
8' < 17'	C		
17' < 23'	D		
23'-40'	F		
SIZE: 5'x9'			
≥0.5' < 3'	C	≥0.5' < 32'	B
3' < 8'	B	32'-40'	C
8' < 17'	C		
17' < 23'	D		
23'-40'	F		

SHORT-WAY SLAB DEPTH	SHORT-WAY SCHEDULE	LONG-WAY SLAB DEPTH	LONG-WAY SCHEDULE
SIZE: 6'x6'			
≥0.5' < 3'	D	≥0.5' < 3'	D
3' < 4'	C	3' < 4'	C
4' < 14'	B	4' < 14'	B
14' < 21'	C	14' < 21'	C
21' < 28'	D	21' < 28'	D
28'-40'	F	28'-40'	F
SIZE: 6'x7'			
≥0.5' < 3'	D	≥0.5' < 3'	D
3' < 4'	C	3' < 4'	C
4' < 12'	B	4' < 15'	B
12' < 19'	C	15' < 21'	C
19' < 26'	D	21' < 30'	D
26'-40'	F	30'-40'	F
SIZE: 6'x8'			
≥0.5' < 3'	D	≥0.5' < 3'	D
3' < 4'	C	3' < 4'	C
4' < 7'	B	4' < 16'	B
7' < 16'	C	16' < 23'	C
16' < 23'	D	23' < 32'	D
23'-40'	F	32'-40'	F
SIZE: 6'x9'			
≥0.5' < 3'	D	≥0.5' < 3'	D
3' < 15'	C	3' < 4'	C
15' < 21'	D	4' < 18'	B
21' < 27'	E	18' < 27'	C
27'-40'	G	27' < 37'	D
		37'-40'	E
SIZE: 7'x7'			
≥0.5' < 3'	E	≥0.5' < 3'	E
3' < 4'	D	3' < 4'	D
4' < 16'	C	4' < 16'	C
16' < 22'	D	16' < 22'	D
22' < 28'	E	22' < 28'	E
28'-40'	G	28'-40'	G
SIZE: 7'x8'			
≥0.5' < 3'	E	≥0.5' < 3'	E
3' < 4'	D	3' < 4'	D
4' < 15'	C	4' < 17'	C
15' < 21'	D	17' < 23'	D
21' < 27'	E	23' < 29'	E
27'-40'	G	29'-40'	G
SIZE: 7'x9'			
≥0.5' < 3'	E	≥0.5' < 3'	E
3' < 4'	D	3' < 4'	D
4' < 12'	C	4' < 18'	C
12' < 18'	D	18' < 24'	D
18' < 24'	E	24' < 32'	E
24'-40'	G	32'-40'	G

SHORT-WAY SLAB DEPTH	SHORT-WAY SCHEDULE	LONG-WAY SLAB DEPTH	LONG-WAY SCHEDULE
SIZE: 8'x8'			
≥ 0.5' < 3'	D	≥ 0.5' < 3'	D
3' < 4'	C	3' < 4'	C
4' < 9'	B	4' < 9'	B
9' < 17'	C	9' < 17'	C
17' < 31'	D	17' < 31'	D
31'-40'	G	31'-40'	G
SIZE: 8'x9'			
≥ 0.5' < 3'	D	≥ 0.5' < 3'	E
3' < 4'	C	3' < 4'	D
4' < 16'	B	4' < 18'	C
16' < 22'	C	18' < 25'	D
22' < 29'	D	25' < 32'	F
29'-40'	F	32'-40'	G
SIZE: 9'x9'			
≥ 0.5' < 3'	F	≥ 0.5' < 3'	F
3' < 14'	C	3' < 14'	C
14' < 20'	D	14' < 20'	D
20' < 26'	E	20' < 26'	E
26'-40'	G	26'-40'	G

WALL DESIGNS – RECTANGULAR STRUCTURES

VERTICAL REINFORCING WALL DEPTH	VERTICAL REINFORCING SCHEDULE	HORIZONTAL REINFORCING WALL DEPTH	HORIZONTAL REINFORCING SCHEDULE
SIZE: 3'-6" * SEE NOTE BELOW			
≥1.17'-40'	A	≥1.17'-40'	B
SIZE: 4'-0"			
≥1.17'-40'	A	≥1.17'-40'	B
SIZE: 5'-0"			
≥1.17'-40'	A	≥1.17' < 33'	B
		33'-40'	C
SIZE: 6'-0"			
≥1.17'-40'	A	≥1.17' < 22'	B
		22'-40'	C
SIZE: 7'-0"			
≥1.17'-40'	A	≥1.17' < 15'	B
		15' < 25'	C
		25'-40'	D
SIZE: 8'-0"			
≥1.17'-40'	A	≥1.17' < 11'	B
		11' < 19'	C
		19' < 29'	D
		29'-40'	F
SIZE: 9'-0"			
≥1.17'-40'	A	≥1.17' < 15'	C
		15' < 22'	D
		22'-40'	F

SIZE is inside length of a structure wall.

* Precast structures 3'-6" X 3'-6" may be cast with 6" walls to depths of 15'. See Index 201

SLAB DESIGNS – ROUND STRUCTURES

SLAB DEPTH	SLAB THICKNESS	REINFORCING (2 WAYS) SCHEDULE
SIZE: 3'-6"		
≥0.5'-40'	8"	C
SIZE: 4'-0"		
≥0.5'-40'	8"	C
SIZE: 5'-0"		
≥0.5' < 30'	8"	C
30'-40'	8"	D
SIZE: 6'-0"		
≥0.5' < 8'	8"	B
8' < 18'	8"	C
18' < 30'	8"	D
30' < 37'	8"	E
37'-40'	8"	G
SIZE: 8'-0"		
≥0.5' < 9'	10"	C
9' < 15'	10"	D
15' < 23'	10"	E
23' < 33'	12"	E
33'-40'	12"	G
SIZE: 10'-0"		
≥0.5' < 6'	10"	C
6' < 11'	10"	D
11' < 17'	10"	E
17' < 23'	12"	E
23'-40'	12"	G
SIZE: 12'-0"		
≥0.5' < 6'	12"	C
6' < 11'	12"	D
11' < 18'	12"	E
18' < 20'	14"	E
20'-40'	14"	G

REINFORCING SCHEDULE

SCHEDULE	GRADE 60 STEEL OR 65 KSI (WIRE FABRIC) in²/ft
A	0.20
B	0.24
C	0.37
D	0.53
E	0.73
F	1.06
G	1.45

GENERAL NOTES

1. Slab reinforcement is appropriate for top, intermediate, and bottom slabs.
2. Slab depth is measured from finished grade to top of slab.
3. Wall design depth is measured to the top of the bottom slab for boxes and to the top of the intermediate slab for risers.
4. Wall height is the distance between top of lower slab to bottom of upper slab.
5. Wall sizes exceeding 9'-0" require special design.

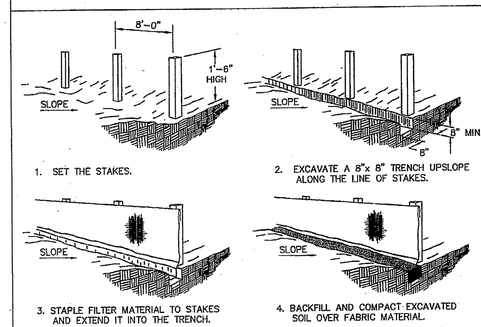

CONSTRUCTION OF A FILTER BARRIER
N.T.S.

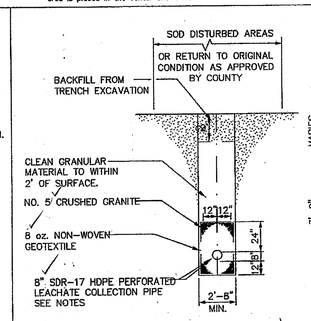

LEACHATE COLLECTION PIPE DETAIL
NTS

New or existing?

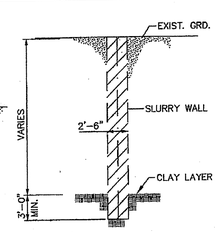

EXISTING SLURRY WALL DETAIL
NTS
(FOR INFORMATION ONLY)

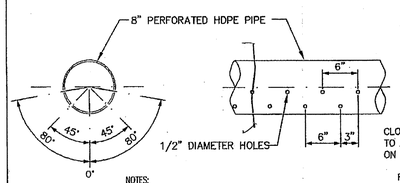

NOTES:

1. 0° CORRESPONDS TO PIPE INVERT.
2. PROVIDE FOUR 1/2" DIAMETER PERFORATIONS AS SHOWN; 6" O.C.

PIPE PERFORATION PATTERN
SCALE: N.T.S.

Wall Thickness?

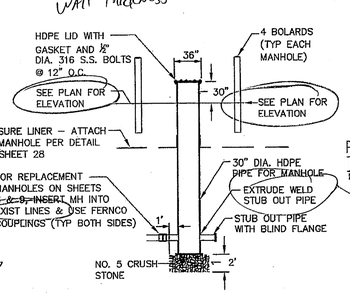

NEW HDPE MANHOLE
SCALE: N.T.S.

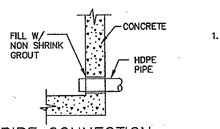

PIPE CONNECTION TO EXISTING MANHOLE
N.T.S.

NOTES:

SPECIFICATIONS FOR LEACHATE COLLECTION PIPE: HIGH DENSITY POLYETHYLENE PIPE

1. THE POLYETHYLENE PIPE SHALL BE HIGH PERFORMANCE, HIGH MOLECULAR WEIGHT, HIGH DENSITY POLYETHYLENE PIPE, CONFORMING TO ASTM D 1248 (TYPE III, CLASS C, CATEGORY 5, GRADE P34). MINIMUM CELL CLASSIFICATION VALUE SHALL BE 345434C AS REFERENCED IN ASTM D 3350. THE MATERIAL DESIGNATION IS PE 3408. THE PIPE SHALL CONTAIN 2 PERCENT CARBON BLACK.THE PIPE SHALL BE DRISCOPIPE 1000 (PE 3404) POLYETHYLENE PIPE RESIN AS MANUFACTURED BY PHILLIPS DRISCOPIPE, INC., RICHARDSON, TEXAS; PLEXCO, FRANKLIN PARK, ILL.; POLY PIPE INDUSTRIES, INC., GAINSVILLE, TEXAS; OR EQUAL.
2. FITTINGS SHALL BE BUTT FUSION TYPE OR APPROVED EQUAL, MEETING THE REQUIREMENTS OF ASTM D-3261. ALL FITTINGS SHALL BE PRESSURE RATED TO MATCH THE SYSTEM PIPING TO WHICH THEY ARE FUSED. AT THE POINT OF FUSION, THE OUTSIDE DIAMETER AND MINIMUM WALL THICKNESS SHALL MEET THE OUTSIDE DIAMETER AND MINIMUM WALL THICKNESS SPECIFICATIONS OF ASTM F-714 FOR THE SAME SIZE OF PIPE. PIPE CONNECTIONS BETWEEN DISSIMILAR MATERIALS SHALL BE JOINED BY STUD END AND BACKING FLANGE.
3. CONTRACTOR SHALL TV ALL PIPES AND PROVIDE VIDEO AND REPORT TO COUNTY AS PROOF OF PROPER INSTALLATION.

POST, BUCKLEY, SCHUH & JERNIGAN, INC., D/B/A/
PBSJ
PRINCIPAL ADDRESS:
2001 NW 107th AVENUE
MIAMI, FL. 33172-2507
FBPR CERT. OF AUTH. No. 24
PRODUCTION ADDRESS:
2803 FRUITVILLE ROAD, STE 130
SARASOTA, FLORIDA 34237
Ph. (941) 954-4036

CLIENT
MANATEE COUNTY PROJECT MANAGEMENT DEPARTMENT
1026 26th AVENUE EAST
BRADENTON, FLORIDA 34208

PROJECT
LENA ROAD LANDFILL
STORMWATER SYSTEM IMPROVEMENTS

TASK
DETAILS

ORIGINAL: JUNE, 03
REVISIONS:
1 SEPTEMBER, 04-SWFWMD COMMENTS
2
3
4
5

ENGINEER: JOHN M. EASH
REG. No. 47136
STATE OF FLORIDA
PROFESSIONAL ENGINEER

JOB NO. 120507.10
DRAWN JAS
DESIGNED JME
CHECKED JME
QC DAW

SHEET 14

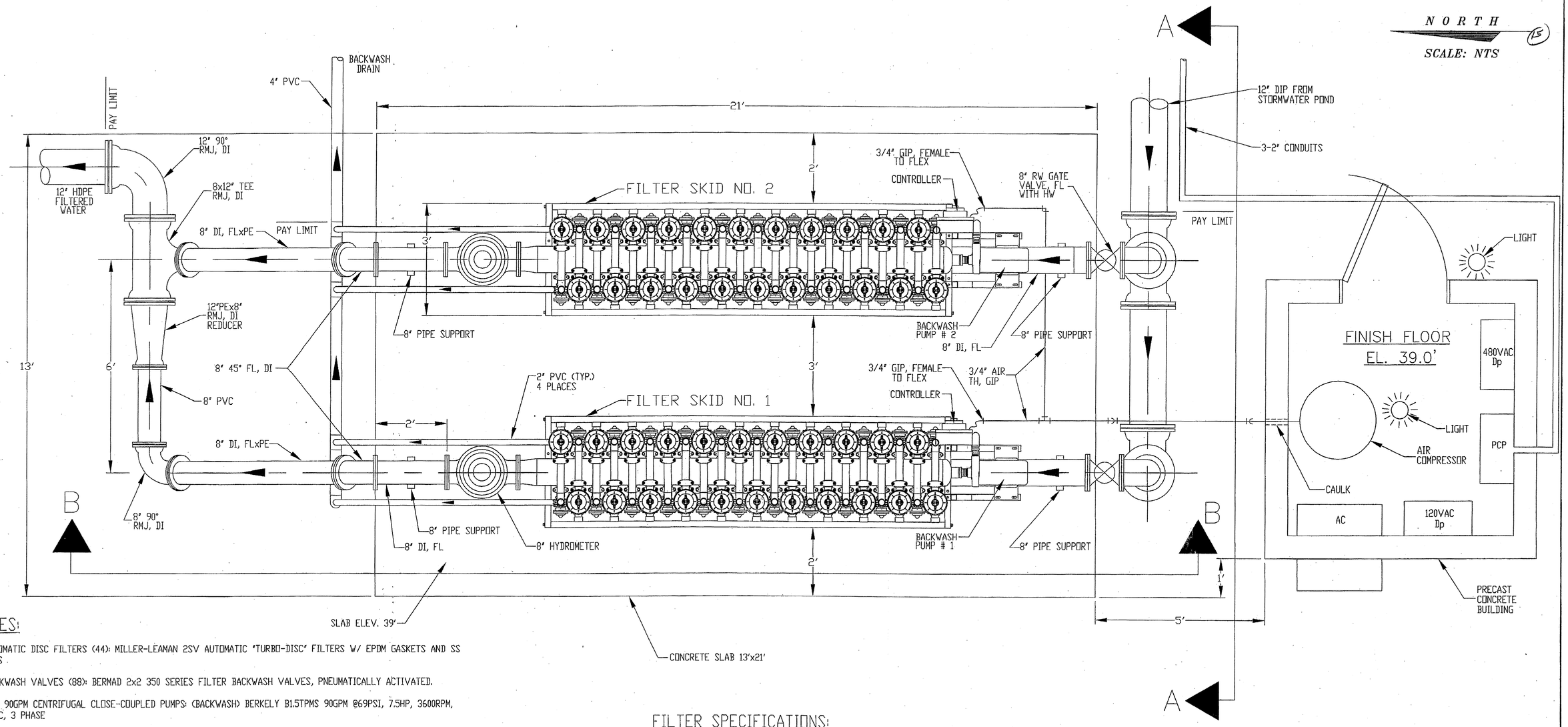

NOTES:

1. AUTOMATIC DISC FILTERS (44): MILLER-LEAMAN 2SV AUTOMATIC "TURBO-DISC" FILTERS W/ EPDM GASKETS AND SS CLAMPS
2. BACKWASH VALVES (88): BERMAD 2x2 350 SERIES FILTER BACKWASH VALVES, PNEUMATICALLY ACTIVATED.
3. 2 - 90GPM CENTRIFUGAL CLOSE-COUPLED PUMPS: (BACKWASH) BERKELY B1.5TPMS 90GPM @69PSI, 7.5HP, 3600RPM, 480VAC, 3 PHASE
4. MAGNETIC DRIVE HYDROMETER(2): BERMAD MODEL 910
5. BACKWASH CONTROLLER (2): MILLER-LEAMAN MILLENNIUM2 12/8 VERSION CONTROLLER, 115VAC INPUT, 24VDC OUTPUT
6. SOLENOIDS: BURKERT TYPE 5470 PNEUMATIC SOLENOIDS,
7. SYSTEM MAINLINE MANIFOLDS: 8" DIAMETER, SCHEDULE 10, T304 STAINLESS STEEL PIPE & FITTINGS
8. SKID FRAME: 2" SQUARE, SCHEDULE 10,T304 STAINLESS STEEL
9. AIR COMPRESSOR: 3HP, SAYLOR BEALL MODEL 730-60 VERTICAL COMPRESSOR, 480VAC, 60Hz, 3-PHASE
10. FLANGE ADAPTER: EBAA MEGAFLANGE, SERIES 2100, DI
11. PVC BELL RESTRAINT: EBAA SPLIT SERRATED RESTRAINT, SERIES 1600, DI
12. PVC RMJ RESTRAINT: EBAA SPLIT RESTRAINT SERIES 2000SV, DI
13. PIPE SUPPORTS: STANDON MODEL S92 SADDLE SUPPORT
14. PVC < 3" = SCHEDULE 80
15. PVC >,= 3" = C900 DR25

FILTER SPECIFICATIONS:

1. FILTER REQUIRED: 2 SKIDS (22 FILTER PODS EACH)
2. MFGR & MODEL NO.: MILLER LEAMAN 2 SV
3. FILTER CAPACITY: 700 GPM EACH (1400 GPM TWO)

POST, BUCKLEY, SCHUH & JERNIGAN, INC., D/B/A/ PBSJ

PRINCIPAL ADDRESS:
2001 NW 107th AVENUE
MIAMI, FL. 33172-2507
FBRP CERT. OF AUTH. No. 24

PRODUCTION ADDRESS:
2803 FRUITVILLE ROAD, SUITE 130
SARASOTA, FLORIDA 34237
Ph. (941) 954-4036

CLIENT
MANATEE COUNTY
PROJECT MANAGEMENT DEPARTMENT
4410 66TH STREET WEST
BRADENTON, FLORIDA 34210

MANATEE COUNTY FLORIDA

PROJECT	TASK
LENA ROAD LANDFILL	STORMWATER
STORMWATER SYSTEM IMPROVEMENTS	AUTOMATIC DISC FILTER SYSTEM
	PLAN

ORIGINAL: APR. 2003
REVISIONS:
1 ____ 2 ____ 3 ____ 4 ____ 5 ____ 6 ____ 7 ____ 8 ____ 9 ____ 10 ____ 11 ____ 12 ____

ENGINEER:
DAVID A. WEBER
REG. NO. 42923
STATE OF FLORIDA
DATE

JOB NO. 100197.12
DRAWN BZ
DESIGNED BZ
CHECKED BZ
QC DW

SHEET 15

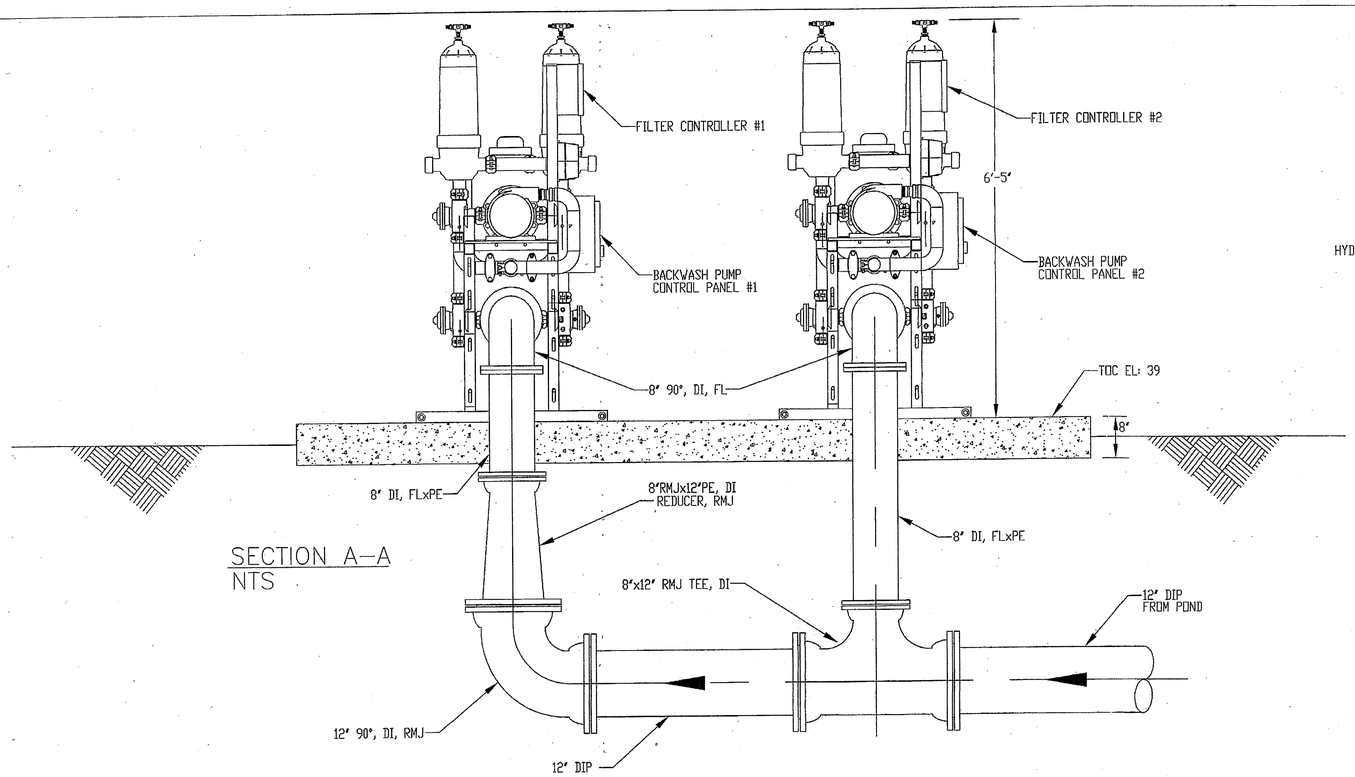

SECTION A–A
NTS

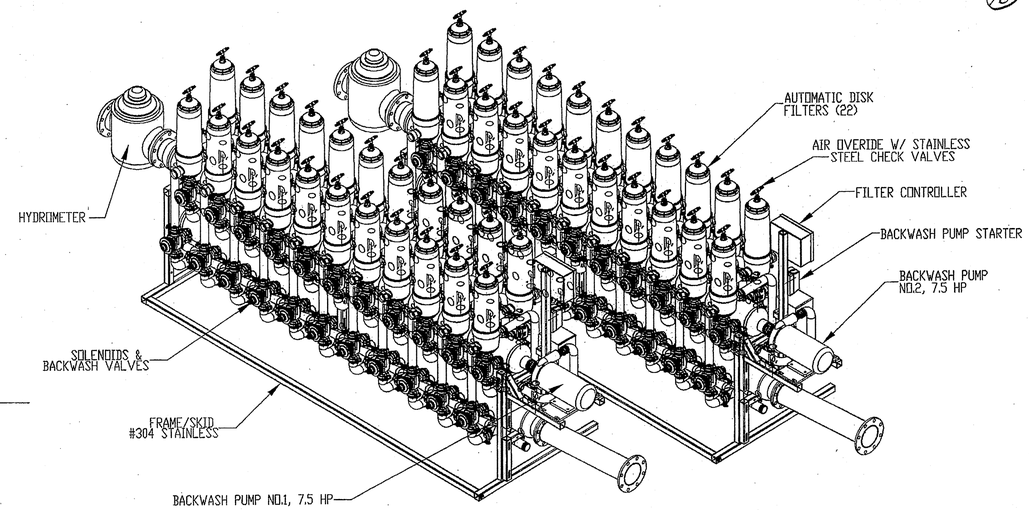

ISOMETRIC
NTS

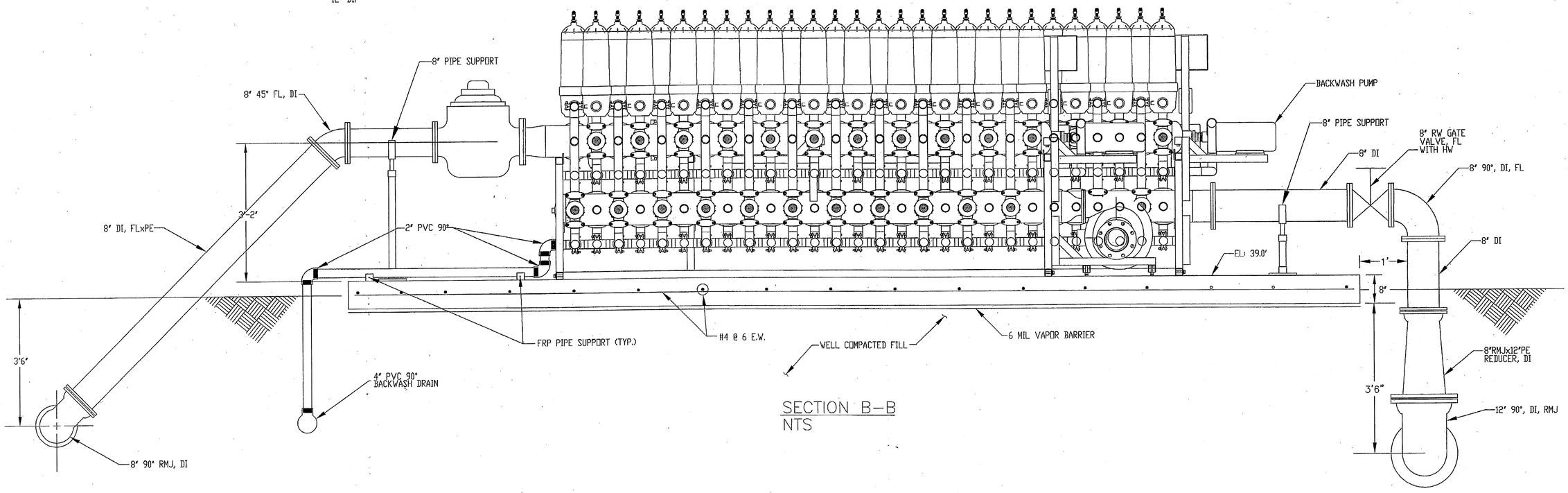

SECTION B–B
NTS

POST, BUCKLEY, SCHUH & JERNIGAN, INC., D/B/A/
PBSJ
PRINCIPAL ADDRESS:
2001 MW 107th AVENUE
MIAMI, FL. 33172-2507
FBRP CERT. OF AUTH. No. 24
PRODUCTION ADDRESS:
2803 FRUITVILLE ROAD, SUITE 130
SARASOTA, FLORIDA 34237
Ph. (941) 954-4036

CLIENT
MANATEE COUNTY
PROJECT MANAGEMENT DEPARTMENT
4410 66TH STREET WEST
BRADENTON, FLORIDA 34210

MANATEE COUNTY FLORIDA

PROJECT
LENA ROAD LANDFILL
STORMWATER SYSTEM IMPROVEMENTS

TASK
STORMWATER
AUTOMATIC DISC FILTER SYSTEM
SECTIONS

ORIGINAL: MAR. 2003
REVISIONS:
1
2
3
4
5
6
7
8
9
10
11
12

ENGINEER:
DAVID A. WEBER
REG. NO. 28323

JOB NO.	100197.06
DRAWN	BZ
DESIGNED	BZ
CHECKED	BZ
QC	DW

SHEET 16

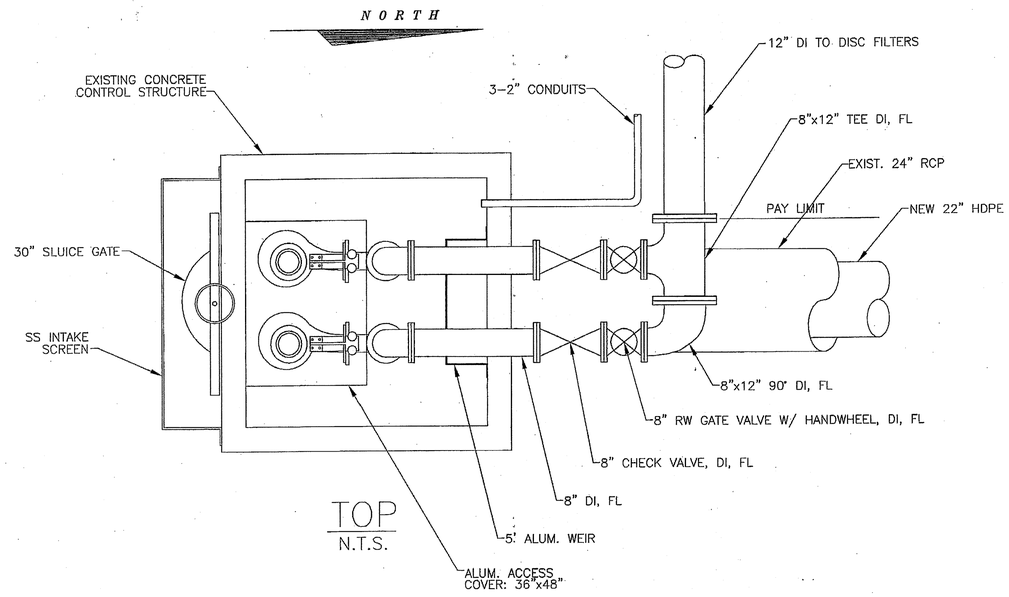

TOP
N.T.S.

PUMP SPECIFICATIONS

PUMP REQUIRED	TWO
MFGR. & MODEL NO.	FLYGT C-3252
PUMP SIZE	6" DISCHARGE
PUMP CAPACITY	800 GPM
TOTAL HEAD	80 FT.
IMPELLER NO.	452
MOTOR REQUIREMENTS *	23 HP. MIN. 460 VOLT, 3 PHASE
SPEED	1750 R.P.M.
ELECTRICAL SERVICE	460 VOLTS, 3 PHASE, 60 HERTZ

* HP SHALL BE ADEQUATE THRU ALL POINTS ON THE PUMP CURVE

PUMP CONTROL LEVELS

1 HIGH WATER ALARM	ELEV.	34.00
2 LEAD PUMP No.1 ON	ELEV.	32.77
3 ALL PUMPS OFF	ELEV.	30.77

STATION DESIGN

800 GPM (ONE PUMP)
1600 GPM (TWO PUMPS)

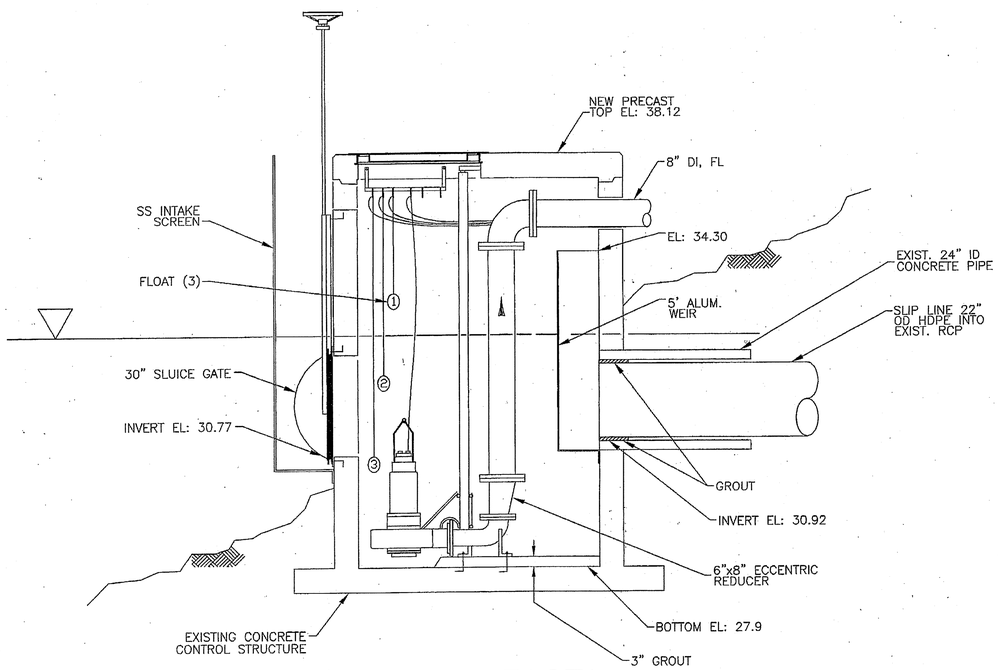

FROM EAST
N.T.S.

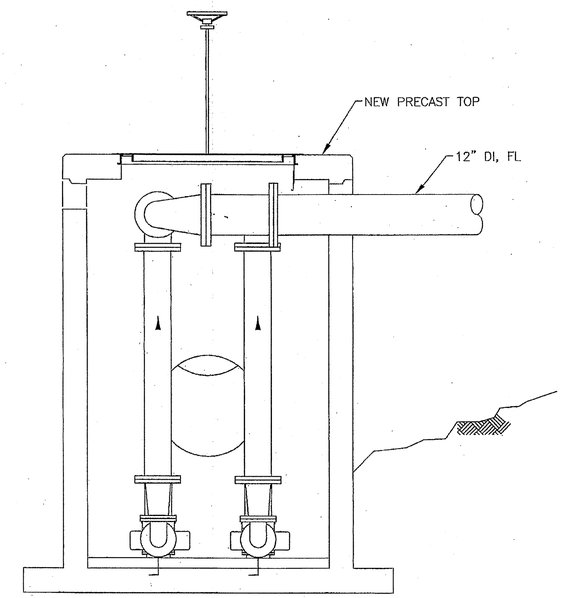

FROM NORTH
N.T.S.

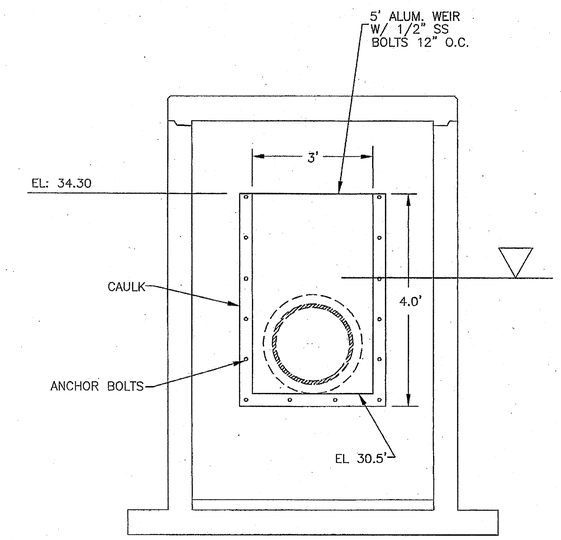

ALUMINUM OVERFLOW WEIR
N.T.S.

POST, BUCKLEY, SCHUH & JERNIGAN, INC., D/B/A/
PBSJ
PRINCIPAL ADDRESS:
2001 MW 107th AVENUE
MIAMI, FL. 33172-2507
FBRP CERT. OF AUTH. No. 24
PRODUCTION ADDRESS:
2803 FRUITVILLE ROAD, SUITE 130
SARASOTA, FLORIDA 34237
Ph. (941) 954-4036

CLIENT
MANATEE COUNTY
PROJECT MANAGEMENT DEPARTMENT
4410 66TH STREET WEST
BRADENTON, FLORIDA 34210

MANATEE COUNTY FLORIDA

PROJECT
LENA ROAD LANDFILL
STORMWATER SYSTEM IMPROVEMENTS

TASK
STORMWATER
AUTOMATIC DISK FILTER SYSTEM
FILTER FEED PUMPS

ORIGINAL: APR. 2003
REVISIONS:
1
2
3
4
5
6
7
8
9
10
11
12

ENGINEER:
DAVID A. WEBER
REG. NO. 23326
STATE OF FLORIDA
DATE

JOB NO. 100197.06
DRAWN BZ
DESIGNED BZ
CHECKED BZ
QC DW

SHEET 17

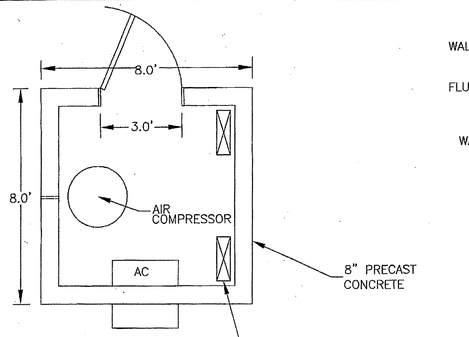

PLAN
PRECAST CONCRETE CONTROL BUILDING
SCALE: NTS

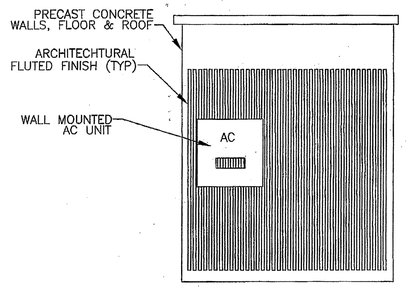

BACK ELEVATION
SCALE: NTS

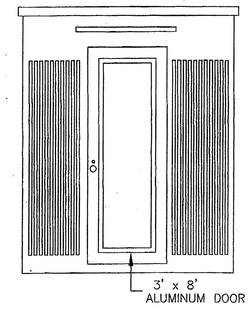

FRONT ELEVATION
SCALE: NTS

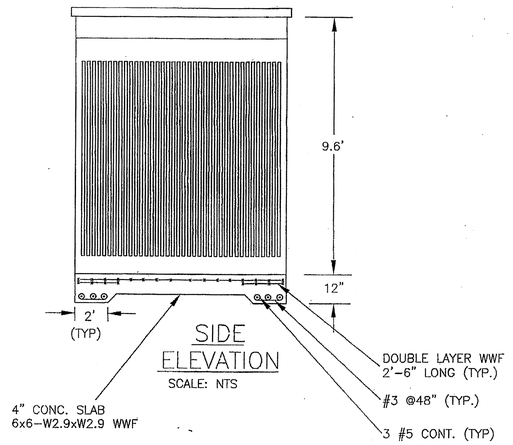

SIDE ELEVATION
SCALE: NTS

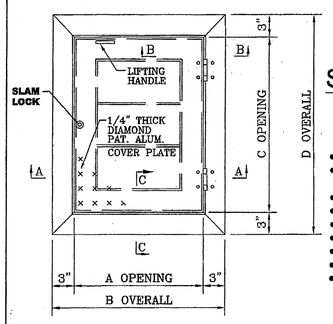

PLAN

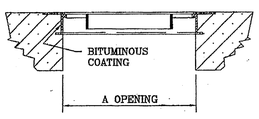

SECTION A-A

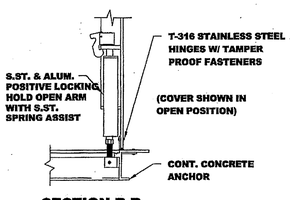

SECTION B-B

HALLIDAY PRODUCTS

SERIES S1S ACCESS DOOR

(STANDARD WITH SPRING ASSIST) SCALE: NTS

STANDARD FEATURES:

- STAINLESS STEEL COMPRESSION SPRING ASSIST
- AUTO-LOCK T-316 STAINLESS STEEL HOLD OPEN ARM WITH RELEASE HANDLE
- T-316 STAINLESS STEEL HINGES AND ATTACHING HARDWARE
- T-316 STAINLESS STEEL SLAM LOCK W/REMOVABLE KEY
- BUILT-IN NEOPRENE CUSHION/GASKET
- NON-OZONE DEPLETING BITUMINOUS COATING
- SINGLE LEAF CONSTRUCTION
- 300 LBS. PER SQ. FT. LOAD RATING
- LIFETIME GUARANTEE

MODEL NO.	DIMENSIONS A	B	C	D	UNIT WT.
S1S3648	36"	42"	48"	54"	97 LBS.

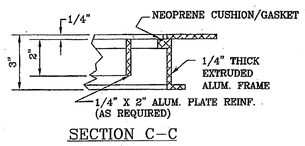

SECTION C-C

HALLIDAY 1/4" STAINLESS STEEL CABLE

SERIES K

(STAINLESS STEEL CABLE)
SCALE: NTS

STANDARD FEATURES:

- COMPLETE WITH HOOK AND EYE
- 1/4" DIA. STAINLESS STEEL CABLE TYPE 304 (TYPE 316 OPTIONAL)
- 1285 LBS. SAFE LOAD
- STAINLESS STEEL THIMBLES
- NICOPRESS SLEEVES
- 1 1/2 TON EYE HOOK WITH STAINLESS STEEL SAFETY LATCH
- TYPE 316 STAINLESS STEEL HARDWARE AVAILABLE
- VARIOUS CONFIGURATIONS AVAILABLE
- ANY LENGTH (SPECIFY)

SERIES J

(STAINLESS STEEL CABLE HOLDER)
SCALE: NTS

STANDARD FEATURES:

- STAINLESS STEEL TYPE 304 (TYPE 316 OPTIONAL)
- 6 HOOKS STANDARD
- USED FOR FLOAT SWITCHES AND LIFTING CABLES
- WALL OR ACCESS FRAME MOUNTING

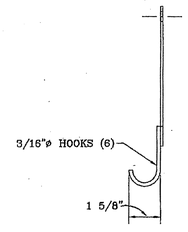

STAINLESS STEEL CABLE HOLDER

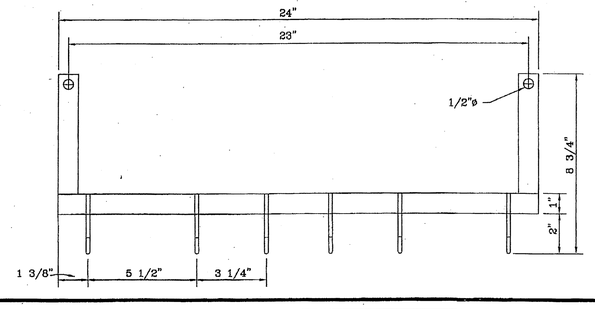

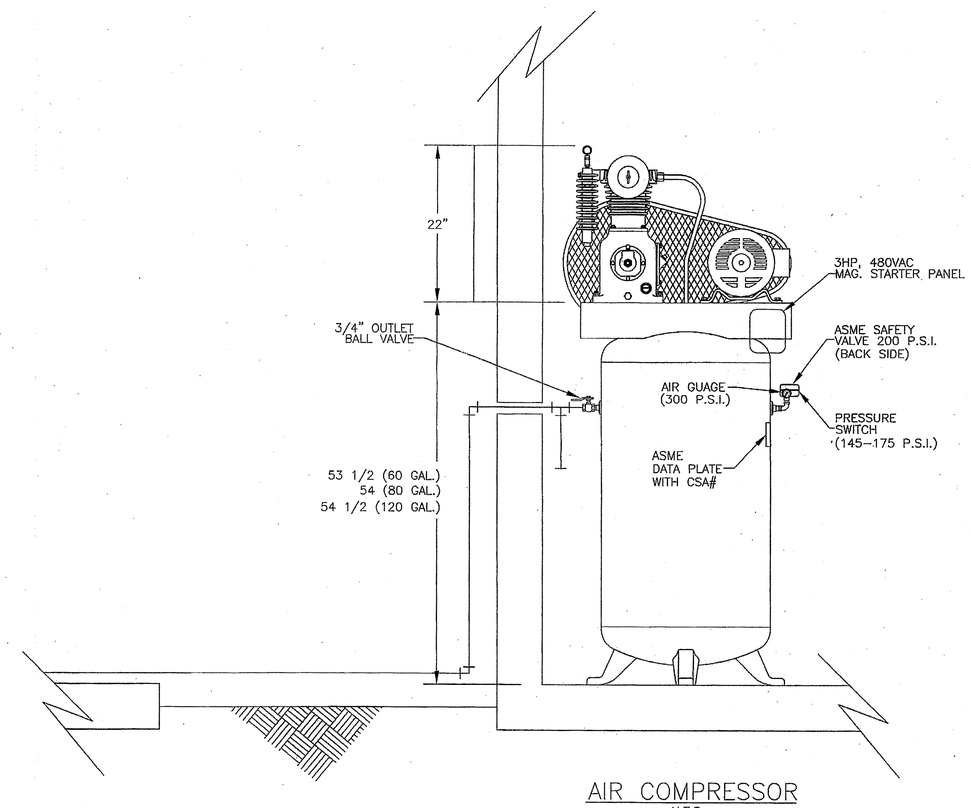

AIR COMPRESSOR
N.T.S.

POST, BUCKLEY, SCHUH & JERNIGAN, INC., D/B/A/ PBSJ

PRINCIPAL ADDRESS:
2001 MW 107th AVENUE
MIAMI, FL. 33172-2507
FBRP CERT. OF AUTH. No. 24

PRODUCTION ADDRESS:
2803 FRUITVILLE ROAD, SUITE 130
SARASOTA, FLORIDA 34237
Ph. (941) 954-4036

CLIENT
MANATEE COUNTY PROJECT MANAGEMENT DEPARTMENT
4410 66TH STREET WEST
BRADENTON, FLORIDA 34210

MANATEE COUNTY FLORIDA

PROJECT
LENA ROAD LANDFILL
STORMWATER SYSTEM IMPROVEMENTS

TASK
STORMWATER
AUTOMATIC DISK FILTER SYSTEM
DETAILS

ORIGINAL: APR. 2003
REVISIONS:
1 2 3 4 5 6 7 8 9 10 11 12

ENGINEER: DAVID A. WEBER
REG. NO. 29820
DATE

JOB NO. 100197.06
DRAWN BZ
DESIGNED BZ
CHECKED BZ
QC DW

SHEET 18

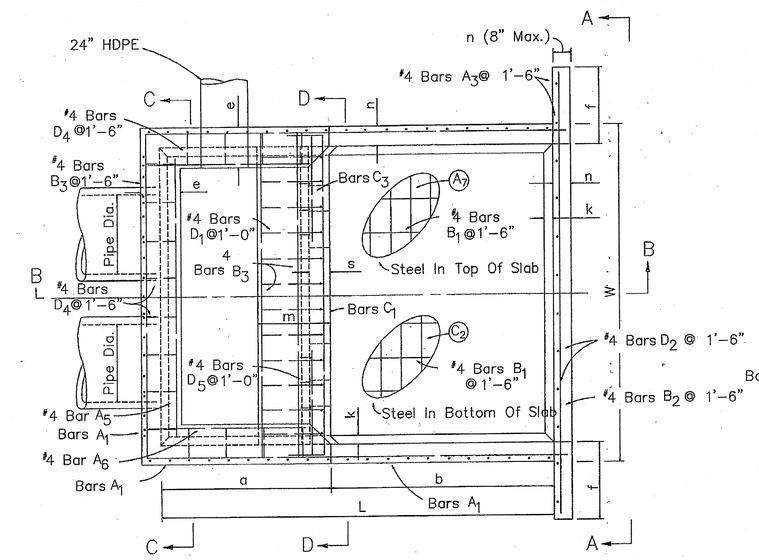

PLAN

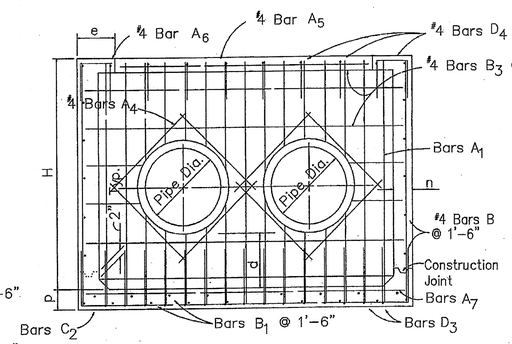

SECTION CC

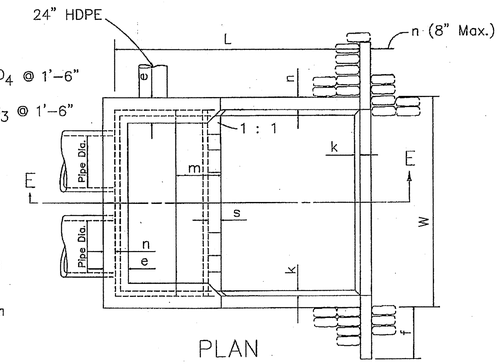

PLAN

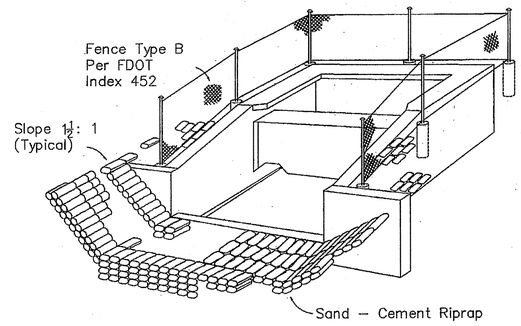

PERSPECTIVE

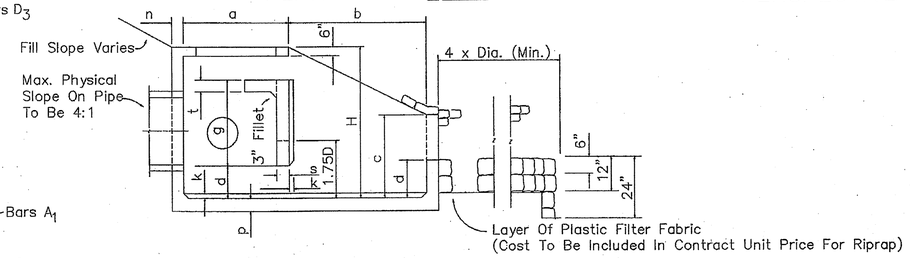

SECTION EE

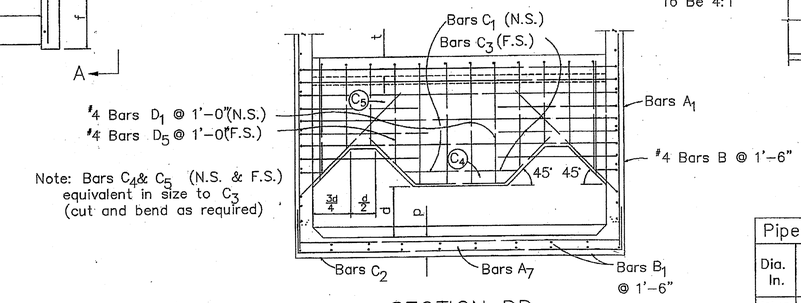

Note: Bars C_4 & C_5 (N.S. & F.S.) equivalent in size to C_3 (cut and bend as required)

SECTION DD

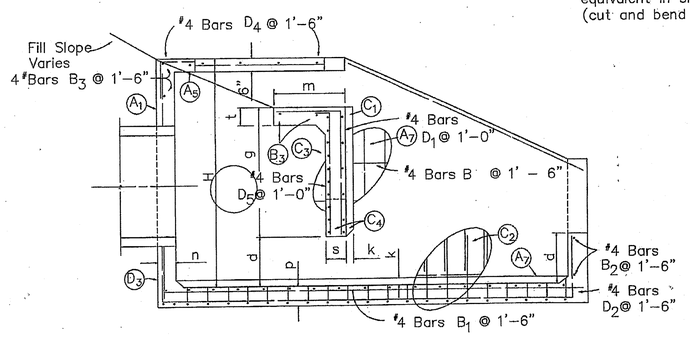

SECTION BB

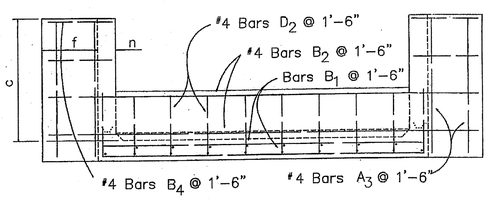

VIEW AA

Pipe Size		Q (Max.)	Dimensions																Sand Cement Riprap
			Ft. – In.										Inches						
Dia. In.	Area S.F.	(cfs)	W	H	L	a	b	c	d	e	f	g	m	n	p	s	t	k	C.Y.(Nom.)
(2)42"	19.24	231	18–6	9–7	22–0	9–3	12–9	6–11	2–9	2–3	3–0	6–2	3–9	12	12½	12	8	6	44.5

GENERAL NOTES

1. U–type concrete endwall energy dissipators are intended for use outside the clear zone.
2. Chamfer all exposed edges 3/4"
3. Concrete meeting the requirements of ASTM C–478 (4000 psi) may be used in lieu of Class 1 Concrete in precast items manufactured in plants which are under the Standard Operating Procedures for the inspection of precast drainage products.
4. Reinforcing steel shall have 2" min. cover.

BARS												
	A_1		A_7		C_1		C_2		C_3		D_3	
Pipe Size	Size (No.)	Spacing (Ft.–In.)	Size (No.)	Spacing (Ft.–In.)	Size (No.)	Spacing (Ft.–In.)	Size (No.)	Spacing (Ft.–In.)	Size (No.)	Spacing (Ft.–In.)	Size (No.)	Spacing (Ft.–In.)
(2)42"	6	0–7½	5	0–10	7	0–10	6	0–7½	7	0–5	6	0–7½

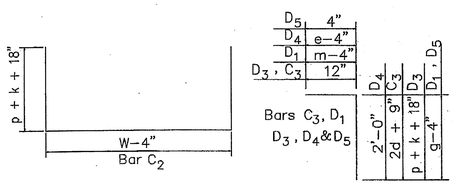

Note : All bar dimensions are out to out.

BENDING DIAGRAM

POST, BUCKLEY, SCHUH & JERNIGAN, INC., D/B/A/
PBSJ
PRINCIPAL ADDRESS:
2001 NW 107th AVENUE
MIAMI, FL. 33172–2507
FBPR CERT. OF AUTH. No. 24
PRODUCTION ADDRESS:
2803 FRUITVILLE ROAD, STE 130
SARASOTA, FLORIDA 34237
Ph. (941) 954–4036

CLIENT
MANATEE COUNTY
PROJECT MANAGEMENT DEPARTMENT
1026 26th AVENUE EAST
BRADENTON, FLORIDA 34208

PROJECT
LENA ROAD LANDFILL
STORMWATER SYSTEM IMPROVEMENTS

TASK
U-TYPE CONCRETE ENDWALL
WITH BAFFLES

ORIGINAL: JUNE, 03
REVISIONS:
1 SEPTEMBER, 04–SWFWMD COMMENTS
2
3
4
5

ENGINEER: MICHAEL J. BASH
REG. NO. 46232
STATE OF FLORIDA
DATE

JOB NO. 120507.10
DRAWN JAS
DESIGNED JME
CHECKED JME
QC DAW
SHEET 19

ANY SPLICES IN HANDHOLES AND PULLBOXES SHALL USE SPLIT BOLT CONNECTORS WITH TAPE AND W/ONE COAT SCOTCHCOTE AND ONE ADDITIONAL LAYER OF TAPE.

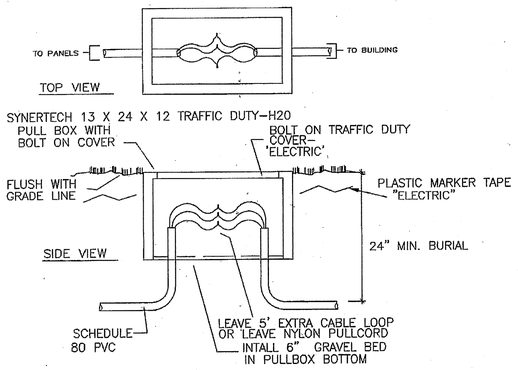

HANDHOLE/PULLBOX DETAIL HH

NO SCALE

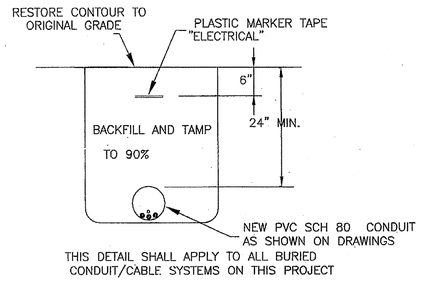

CABLE TRENCH DETAIL

NTS

PANEL 'H1', 225 AMP MAIN, 480/277V, 3 PHASE, 4W, NEMA 1, SURFACE, 10,000 AIC RATED, 30 POLES- ULSE RATED

CKT. NO	WIRE SIZE	DESCRIPTION	BREAKERS POLE	BREAKERS AMP.	AMPS. A?	AMPS. B?	AMPS. C?	BREAKERS AMP.	BREAKERS POLE	DESCRIPTION	WIRE SIZE	CKT. NO
1	8	TO 10KVA MPZ	2	40	30	–	–	125	3	TO PCP PNL	1	2
3	8	"	–	–	–	30	–	–	–	"– 60 HP	1	4
5	6	SURGE	3	50	–	–	30	–	–	"	1	6
7	6	"	–	–	–	–	–	15	3	AIR COMPR	12	8
9	6	"	–	–	–	–	–	–	–	"	12	10
11	12	TO 7.5-HP	3	20	–	–	–	–	–	"	12	12
13	12	"– FILTR #1	–	–	–	–	–	–	–	–	–	14
15	12	"	–	–	–	–	–	–	–	–	–	16
17	12	TO 7.5-HP	3	20	–	–	–	–	–	–	–	18
19	12	"– FILTR #2	–	–	–	–	–	–	–	–	–	20
21	12	"	–	–	–	–	–	–	–	–	–	22
23	–	–	–	–	–	–	–	–	–	–	–	24
25	–	–	–	–	–	–	–	–	–	–	–	26
27	–	–	–	–	–	–	–	–	–	–	–	28
29	–	–	–	–	–	–	–	–	–	–	–	30

LIGHTING FIXTURE SCHEDULE

TYPE	DESCRIPTION	MANUFACTURES CAT. NO.	VOLTAGE	LAMPS	MOUNTING
A	CEILING MOUNT 4' 4 LAMP FL FIXTURE	LITHONIA VC432-120V- GEB	120V	4-32 W FL- T8	CEILING MOUNT ACRYLIC LENS LENS
B	OUTSIDE WALL LIGHT	LITHONIA TWR1-120	120V	70W HPS	WALL- 8' ABOVE GRADE PE CELL ON/OFF
C	OUTSIDE WALL LIGHT	LITHONIA TWR1-120	120V	150W HPS	WALL- 8' ABOVE GRADE SWITCH ON/OFF

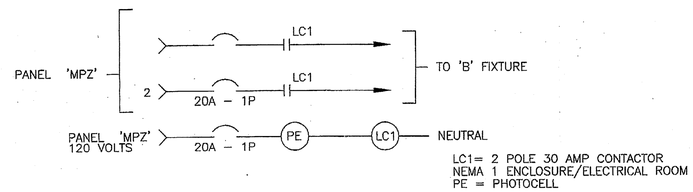

NIGHT LIGHTING CONTROL PLAN

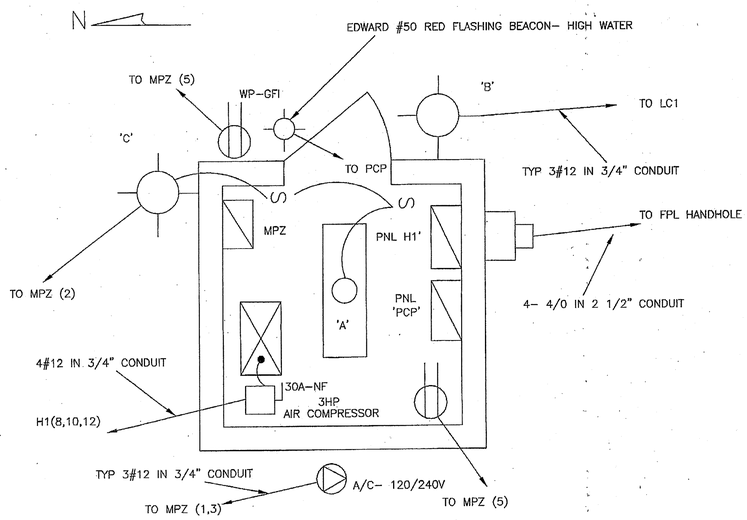

ELECTRICAL ROOM- DETAIL

SCALE: 1/2" = 1'0"

NOTE: PROVIDE 3' 6" MIN. CLEARANCE IN FRONT OF PNL 'PCP' AND 'H1'

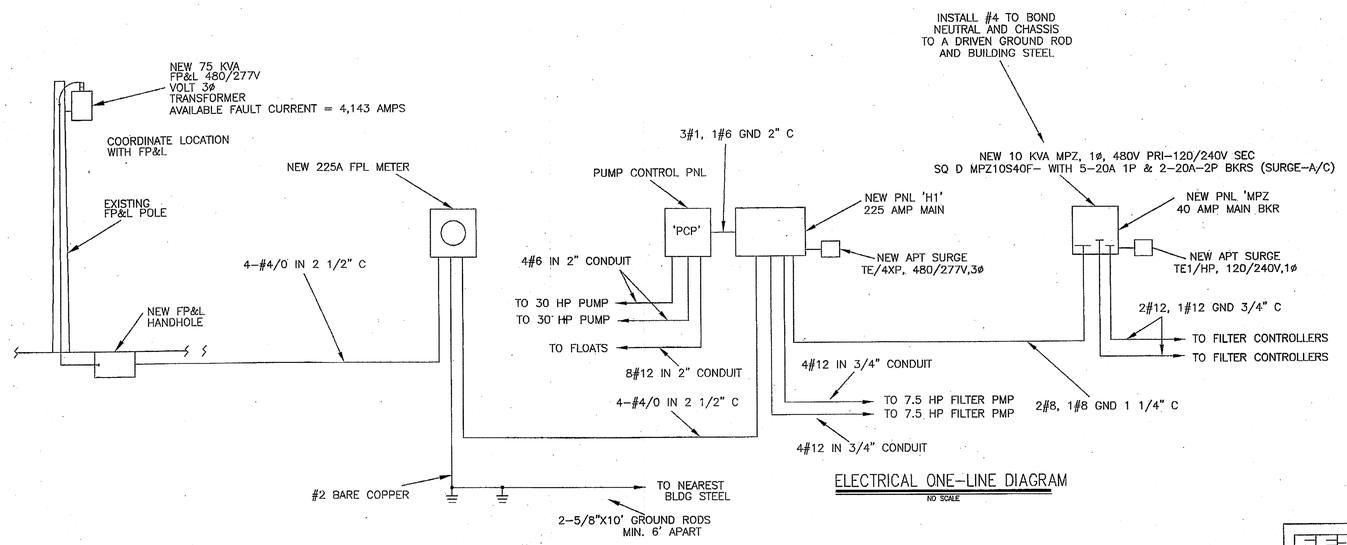

ELECTRICAL ONE-LINE DIAGRAM

NO SCALE

Edward W. Smith, P.E.
(941) 475-1885
FAX (941) 697-9606
Smith Engineering, Inc.
Consulting Engineers EB #3267
Power Communications Lighting Controls Energy
P. O. Box 3811 Placida, Fla. 33946

POST, BUCKLEY, SCHUH & JERNIGAN, INC., D/B/A/
PBSJ
PRINCIPAL ADDRESS:
2001 MW 107th AVENUE
MIAMI, FL. 33172-2507
FBRP CERT. OF AUTH. No. 24
PRODUCTION ADDRESS:
330 S. PINEAPPLE AVE., STE. 113
SARASOTA, FLORIDA 34236
Ph. (941) 954-4036

CLIENT
MANATEE COUNTY
PROJECT MANAGEMENT DEPARTMENT
4410 66TH STREET WEST
BRADENTON, FLORIDA 34210

MANATEE COUNTY FLORIDA

PROJECT
LENA ROAD LANDFILL
STORMWATER SYSTEM IMPROVEMENTS

TASK
STORMWATER
FILTER SYSTEM ELECTRICAL PLAN

ORIGINAL: FEB. 2003
REVISIONS:
1
2
3
4
5
6
7
8
9
10
11
12

ENGINEER:
EDWARD W. SMITH
REG. NO. 21074
DATE

JOB NO. 100197.12
DRAWN EWS
DESIGNED EWS
CHECKED EWS
QC DW

SHEET E-1

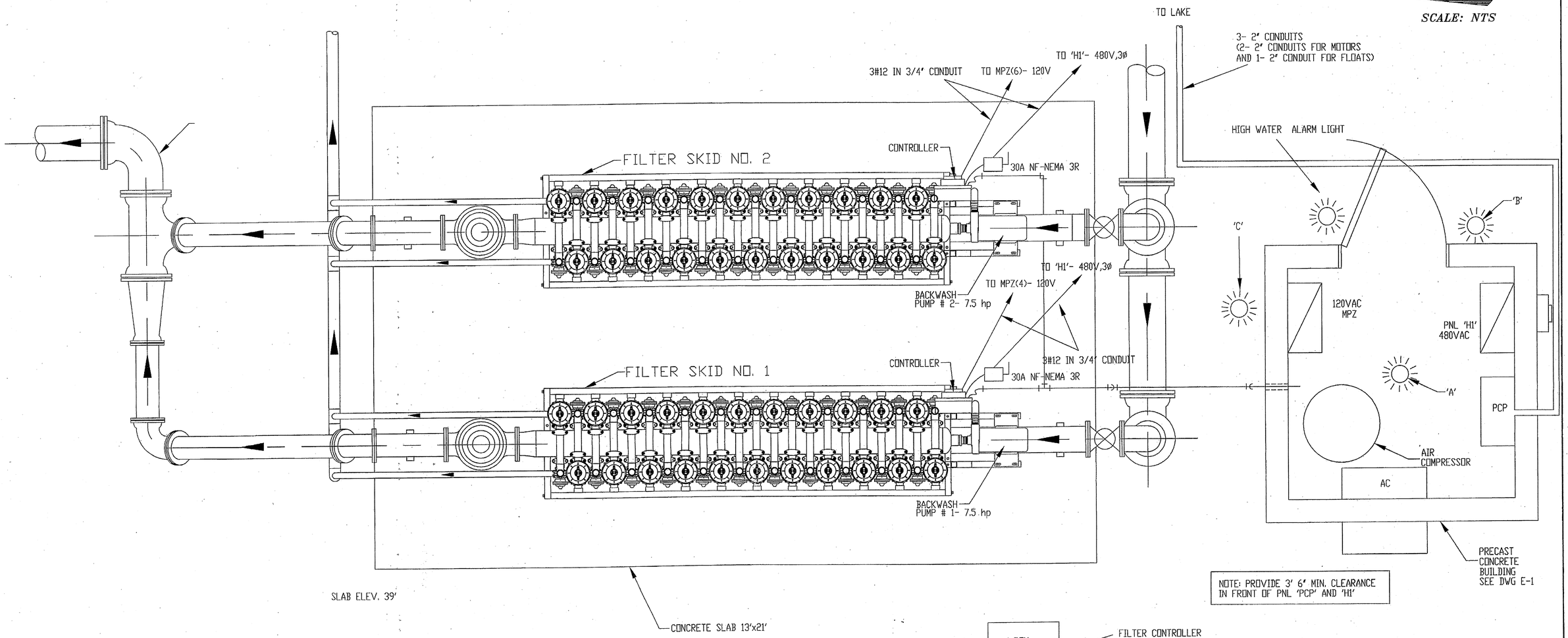

FILTER ELECTRICAL PLAN

NO SCALE

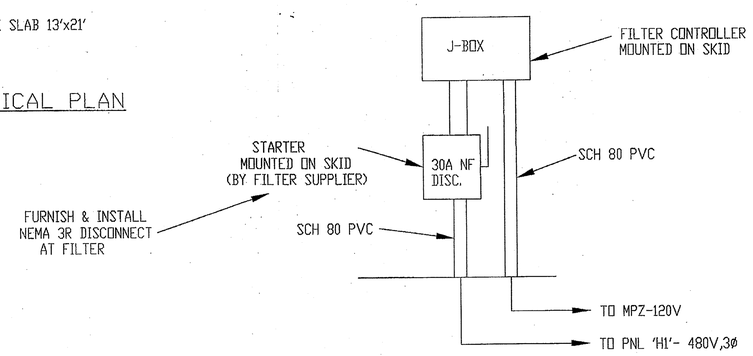

FILTER ELECTRICAL CONNECTIONS

NO SCALE

Edward W. Smith, P.E.
(941) 475-1885
FAX (941) 697-9606
Smith Engineering, Inc.
Consulting Engineers EB #3267
Power Communications Lighting
Controls Energy
P. O. Box 3811 Placida, Fla. 33946

POST, BUCKLEY, SCHUH & JERNIGAN, INC., D/B/A/
PBS&J
PRINCIPAL ADDRESS:
2001 NW 107th AVENUE
MIAMI, FL. 33172-2507
FBRP CERT. OF AUTH. No. 24
PRODUCTION ADDRESS:
2803 FRUITVILLE ROAD, SUITE 130
SARASOTA, FLORIDA 34237
Ph. (941) 954-4036

CLIENT
MANATEE COUNTY
PROJECT MANAGEMENT
DEPARTMENT
4410 66TH STREET WEST
BRADENTON, FLORIDA 34210

MANATEE COUNTY FLORIDA

PROJECT
LENA ROAD LANDFILL
STORMWATER SYSTEM IMPROVEMENTS

TASK
STORMWATER
AUTOMATIC DISC FILTER SYSTEM
ELECTRICAL PLAN

ORIGINAL: APR. 2003
REVISIONS:
1 2 3 4 5 6 7 8 9 10 11 12

ENGINEER:
EDWARD W. SMITH
REG. NO. 21074
DATE

JOB NO. 100197.12
DRAWN EWS
DESIGNED EWS
CHECKED EWS
QC DW

SHEET E-2

ELECTRICAL LEGEND

SYMBOL	DESCRIPTION
	SINGLE GANG SWITCH, HUBBELL/ LEVITON/ PASS, AND SEYMOUR, SINGLE GANG, NYLON WHITE 42" A.F.F.,NYLON IVORY COVER, SPEC. GRADE TYPE, 20 AMP
3	THREE WAY SWITCH, HUBBELL/ LEVITON/ PASS, AND SEYMOUR, THREE WAY, 42" A.F.F.,NYLON IVORY COVER, SPEC. GRADE TYPE, 20 AMP
	SIMPLEX OUTLET, HUBBELL/LEVITON/PASS, AND SEYMOUR, 4" SQUARE BOX, SPEC GRADE 16"AFF, NYLON IVORY COVER PLATE, 20 AMPS
	DUPLEX OUTLET, HUBBELL/LEVITON/PASS, AND SEYMOUR, 4" SQUARE BOX, SPEC GRADE 16"AFF, NYLON IVORY COVER PLATE, 20 AMPS
	DUPLEX OUTLET, HUBBELL/LEVITON/PASS, AND SEYMOUR, 4" SQUARE BOX, SPEC GRADE 42" A.F.F., NYLON IVORY COVER PLATE, 20 AMPS
GFI WP	DUPLEX OUTLET GROUND FAULT- WP, HUBBELL/ LEVITON, /OUTLET, WEATHERPROOF COVER, SPEC GRADE, 16" A.F.F.
	DOUBLE GANG DUPLEX OUTLET- 16" A.F.F., NYLON IVORY COVER SPEC GRADE, 20 AMPS
	SAME AS ABOVE- EXCEPT 42" A.F.F.
	LIGHTING FIXTURE- SEE SCHEDULE
PANEL	PANEL BOARD - DESIGNATED, MOUNT AS SHOWN ON DRAWINGS
	MOTOR, LOAD-DESIGNATED, CONNECTION BY ELECTRICAL CONTRACTOR
	HOME RUN- SEE DRAWINGS
30A/20P	HEAVY DUTY FUSED/NON FUSED SAFETY SWITCH DISCONNECT SIZE/FUSE SIZE AS REQUIRED
	2'x4' FIXTURE, 3 F-40 CW FLUORESCENT LAMPS, 120 V, GLR FUSING, STATIC, ELECTRONIC BALLAST, SEE SCHEDULE
	TELEPHONE - 4" SQ. BOX, TELEPHONE OUTLET FOR FUTURE AT & T 100 INSTRUMENT -3/4" CONDUIT TO 6" ABOVE CEILING, 2 #22 SHIELDED TO PANEL
	EXIT SIGN- SEE FIXTURE SCHEDULE
	EMERGENCY LIGHT W/BATTERY PACK
	SPECIAL OUTLET -SEE DRAWINGS FOR DETAILS
	MOTOR LOAD-SEE DRAWINGS
HH	HANDHOLE- SEE DRAWINGS

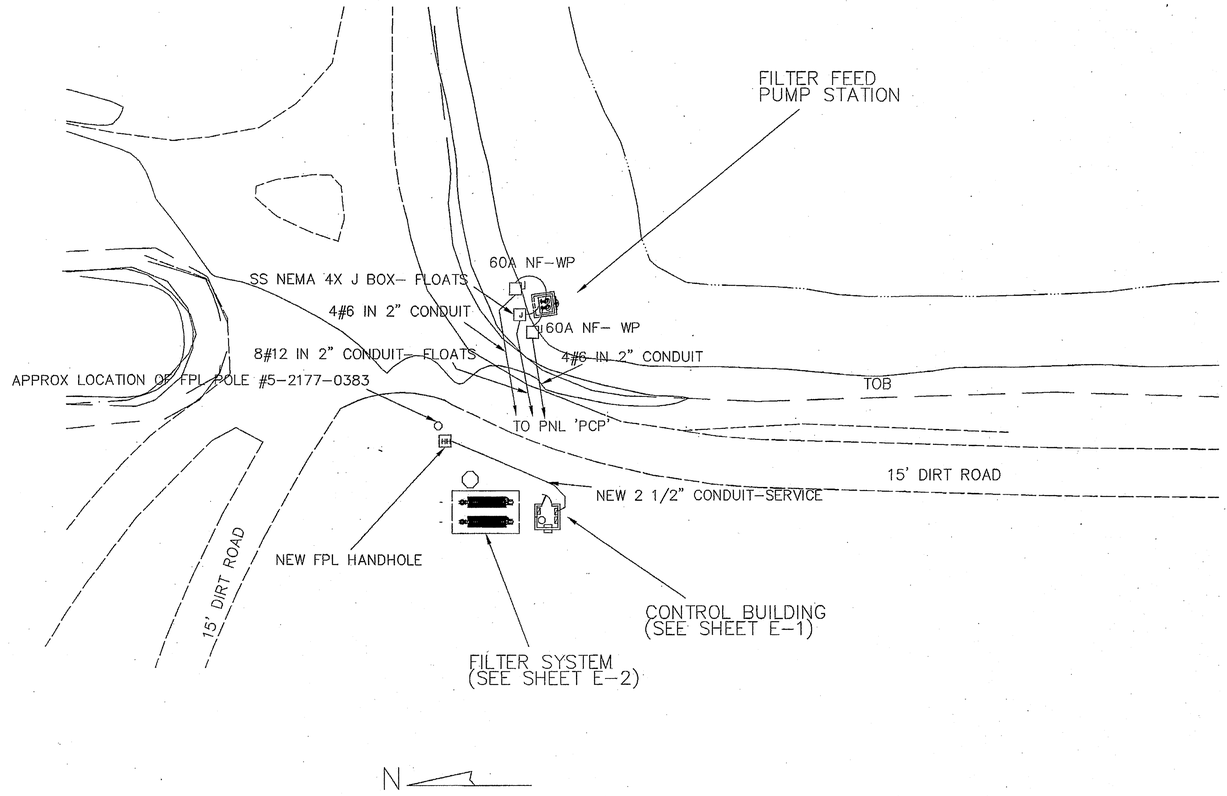

ELECTRICAL SITE PLAN
SCALE- 1" = 20'

ELECTRICAL NOTES

1) ALL ELECTRICAL CONTRACTING WORK SHALL COMPLY WITH THE NATIONAL ELECTRICAL CODE WITH LOCAL AMENDMENTS.

2) DO NOT SCALE DRAWINGS, VERIFY ALL DIMENSIONS ON CIVIL ENGINEERING DRAWINGS OR BY ACTUAL FIELD MEASUREMENT.

3) ELECTRICAL CONTRACTOR IS ENCOURAGED TO VISIT SITE TO BETTER ESTIMATE THE SCOPE OF WORK.

4) MINOR DETAILS, NOT USUALLY SHOWN OR SPECIFIED, BUT NECESSARY FOR PROPER OPERATION, CONSISTENT WITH GOOD WORKMANSHIP, SHALL BE INCLUDED IN ESTIMATE, THE SAME AS IF SHOWN ON DRAWINGS.

5) PRIOR TO ROUGH IN, OWNER/ENGINEER RESERVE THE RIGHT TO RELOCATE ANY OUTLET OR DEVICE 10' IN ANY DIRECTION WITHOUT ANY EXTRA CHARGES.

6) ALL ELECTRICAL CONTRACTING WORK SHALL BE GUARANTEED ONE YEAR FROM DATE OF ACCEPTANCE BY OWNER.

7) COORDINATE ALL WORK WITH FLORIDA POWER AND LIGHT (KEN SAULS TELE. 941-739-3312).

8) ALL WIRE ON PROJECT SHALL BE COPPER - THHN/THWN

9) USE SCHEDULE 80 PVC FOR THE ENTIRE PROJECT- ABOVE & BELOW GROUND.

10) THESE DOCUMENTS HAVE BEEN PREPARED BASED ON INFORMATION PROVIDED BY OTHERS. THE CONSULTANT HAS NOT VERIFIED THE ACCURACY AND/OR COMPLETENESS OF THIS INFORMATION AND SHALL NOT BE RESPONSIBLE FOR ANY ERRORS OR OMISSIONS THAT MAY BE INCORPORATED AS A RESULT OF ERRONEOUS INFORMATION PROVIDED BY OTHERS.

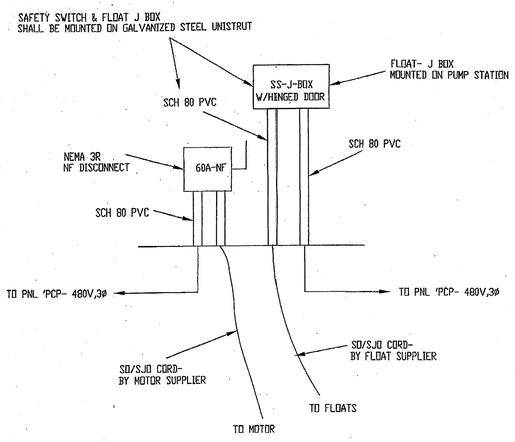

PUMP STATION ELECTRICAL CONNECTIONS
NO SCALE

SERVICE LOAD CALCULATION

DESCRIPTION		AMPS
2-30 HP PUMPS @40 AMPS EA.- 480V	=	80
2- 7.5 HP FILTER PUMPS @ 11 AMPS EA.-480V	=	22
25% LARGEST LOAD-30 HP -40 AMPS X 0.25	=	10
TOTAL LOAD		112 AMPS

INSTALL 225 AMP FEEDER @ 480V, 3ø

Edward W. Smith, P.E.
(941) 475-1885
FAX (941) 697-9606
Smith Engineering, Inc.
Consulting Engineers EB #3267
Power Communications Lighting Controls Energy
P. O. Box 3811 Placida, Fla. 33946

POST, BUCKLEY, SCHUH & JERNIGAN, INC., D/B/A/
PBSJ
PRINCIPAL ADDRESS:
2001 NW 107th AVENUE
MIAMI, FL. 33172-2507
FBRP CERT. OF AUTH. No. 24
PRODUCTION ADDRESS:
330 S. PINEAPPLE AVE., STE. 113
SARASOTA, FLORIDA 34236
Ph. (941) 954-4036

CLIENT
MANATEE COUNTY
PROJECT MANAGEMENT
DEPARTMENT
4410 66TH STREET WEST
BRADENTON, FLORIDA 34210
MANATEE COUNTY FLORIDA

PROJECT
LENA ROAD LANDFILL
STORMWATER SYSTEM IMPROVEMENTS

TASK
STORMWATER
ELECTRICAL SITE PLAN

ORIGINAL: FEB. 2003
REVISIONS:
1 2 3 4 5 6 7 8 9 10 11 12

ENGINEER:
EDWARD W. SMITH
REG. NO. 21074
DATE

JOB NO. 100197.12
DRAWN EWS
DESIGNED EWS
CHECKED EWS
QC DW

SHEET E-3