CDM

1715 North Westshore Blvd, Suite 875
Tampa, FL 33607
tel: 813 281-2900
fax: 813 288-8787

Dept. of Environmental Protection

MAY 07 2007

Southwest District

May 3, 2007

Susan J. Pelz, P.E.
Solid Waste Program Manager
Southwest District
13051 North Telecom Parkway
Temple Terrace, FL 33637-0926

Subject: Sand Installation on Cell A-3 Lined Slope
As-Built Drawings

Dear Ms. Pelz:

Attached please find "As-Built" drawings for the sand installation on the remaining Cell A-3 lined slope for the West Pasco County Landfill. The sand material ($1x10^{-3}$ cm/sec) was installed by COMANCO (the County's installation contractor for temporary drainage cap).

The following work was also performed, as shown on the drawings:

1. Extending the berms at the east and west ends of Cell A-3 slope (see Sheet C-1).
2. Remove existing stormwater pint 1 discharge to the west, to clear the proposed Cell A-4 area, and route drainage to the north along the temporary cap/swale at the west side of Cell A-2 (see Sheet G-1).
3. Route drainage from A-3/A-2 interface to the east and west, (as shown on Sheet C-1).
4. Install temporary cap on the portion of Cell A-3 slope area that is not in use to minimize leachate generation (see Sheet C-1).

With this performed work, Cell A-4 expansion would be independent of these activities. The County has authorized CDM to proceed with the financial assurance cost estimates, and groundwater monitoring and operation plans. We will be contacting FDEP soon to schedule a meeting to go over the FDEP responses for Cell A-4.

Very truly yours,

A.R. Mulla Salah

Abdul Mulla Salah, Ph.D., P.E., BCEE
Camp Dresser & McKee Inc.

c: Steve Morgan, FDEP
John Power, Pasco County
Jason Gorrie, CDM
Aamod Sonawane, CDM

1572686 (1)

PASCO COUNTY, UTILITIES SERVICES BRANCH

BOARD OF COUNTY COMMISSIONERS PASCO COUNTY, FLORIDA

WEST PASCO COUNTY LANDFILL SAND INSTALLATION ON CELL A-3 LINED SLOPE

STATE OF FLORIDA

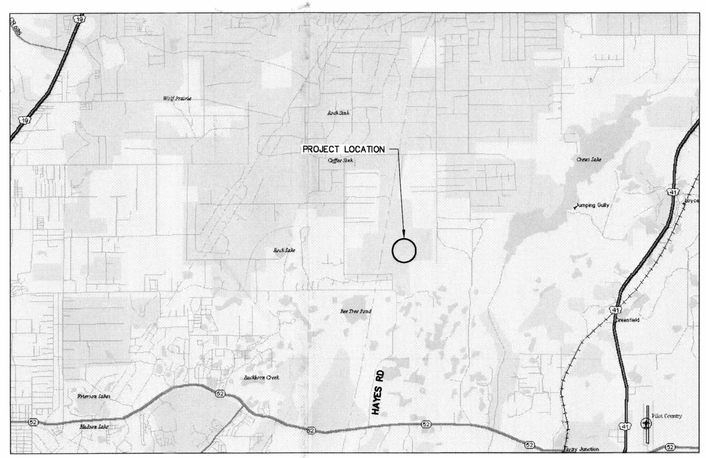

LOCATION MAP

INDEX OF SHEETS

SHEET NUMBER	TITLE
GENERAL	
	COVER SHEET
G-1	EXISTING CONDITIONS AND TEMPORARY CAP DRAINAGE MODIFICATIONS
CIVIL	
C-1	SAND INSTALLATION AREA AND CONTAINMENT BERMS

Dept. of Environmental Protection
MAY 07 2007
Southwest District

REGISTERED ENGINEERS
STATE OF FLORIDA

GENERAL
CIVIL

A.R. Mulla Saleh 5/3/07
ABDUL MULLA SALEH P.E. DATE
NO. 38403

APRIL 2007
PROJECT NO. 6104-55124

CDM Camp Dresser & McKee Inc.
consulting engineering construction operations
1715 North Westshore Blvd Suite 875
Tampa, Florida 33607
Tel: 813-281-2900
License no. EB-0000020

AS-BUILT

CDM Camp Dresser & McKee Inc.

L:\6104\55124\RFI\01General\ COVER 04/24/07 14:32 oliverjw

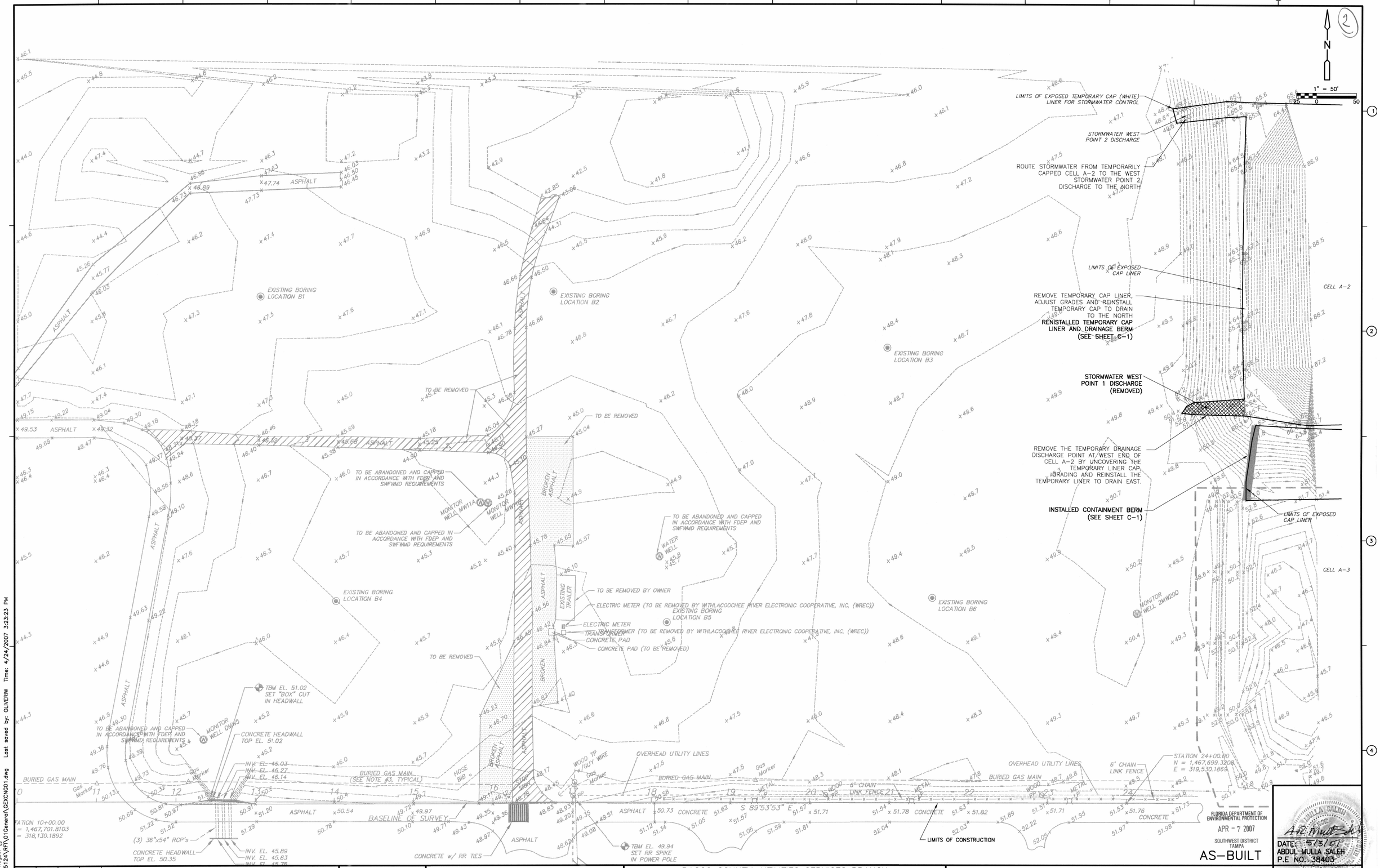

FLORIDA DEPARTMENT OF ENVIRONMENTAL PROTECTION
APR - 7 2007
SOUTHWEST DISTRICT TAMPA

AS-BUILT

DATE: 5/3/07
ABDUL MULLA SALEH
P.E NO. 38403

REV. NO.	DATE	DRWN	CHKD	REMARKS
1	04/07	IWO	AMS	AS-BUILT DIVERSION BERMS AND TEMPORARY CAP

DESIGNED BY: A. SONAWANE
DRAWN BY:
SHEET CHK'D BY: A.MULLA-SALEH
CROSS CHK'D BY: D. STROBRIDGE
APPROVED BY: A.MULLA-SALEH
DATE: JANUARY 2007

CDM Camp Dresser & McKee Inc.
consulting engineering construction operations
1715 North Westshore Blvd, Suite 875
Tampa, Florida 33607
Tel: 813-281-2900
License no. EB-0000020

PASCO COUNTY, UTILITIES SERVICES BRANCH
PASCO COUNTY FLORIDA

WEST PASCO COUNTY LANDFILL SAND INSTALLATION ON CELL A-3 LINED SLOPE

EXISTING CONDITIONS AND TEMPORARY CAP DRAINAGE MODIFICATIONS

PROJECT NO.: 6104-55124
FILE NAME: GEXCNG01.dwg

SHEET NO.
G-1

Xref's: [TEXT,] Images: []
Filename: L:\6104\55124\RFI\01General\GEXCNG01.dwg Last saved by: OLIVERIW Time: 4/24/2007 3:23:23 PM

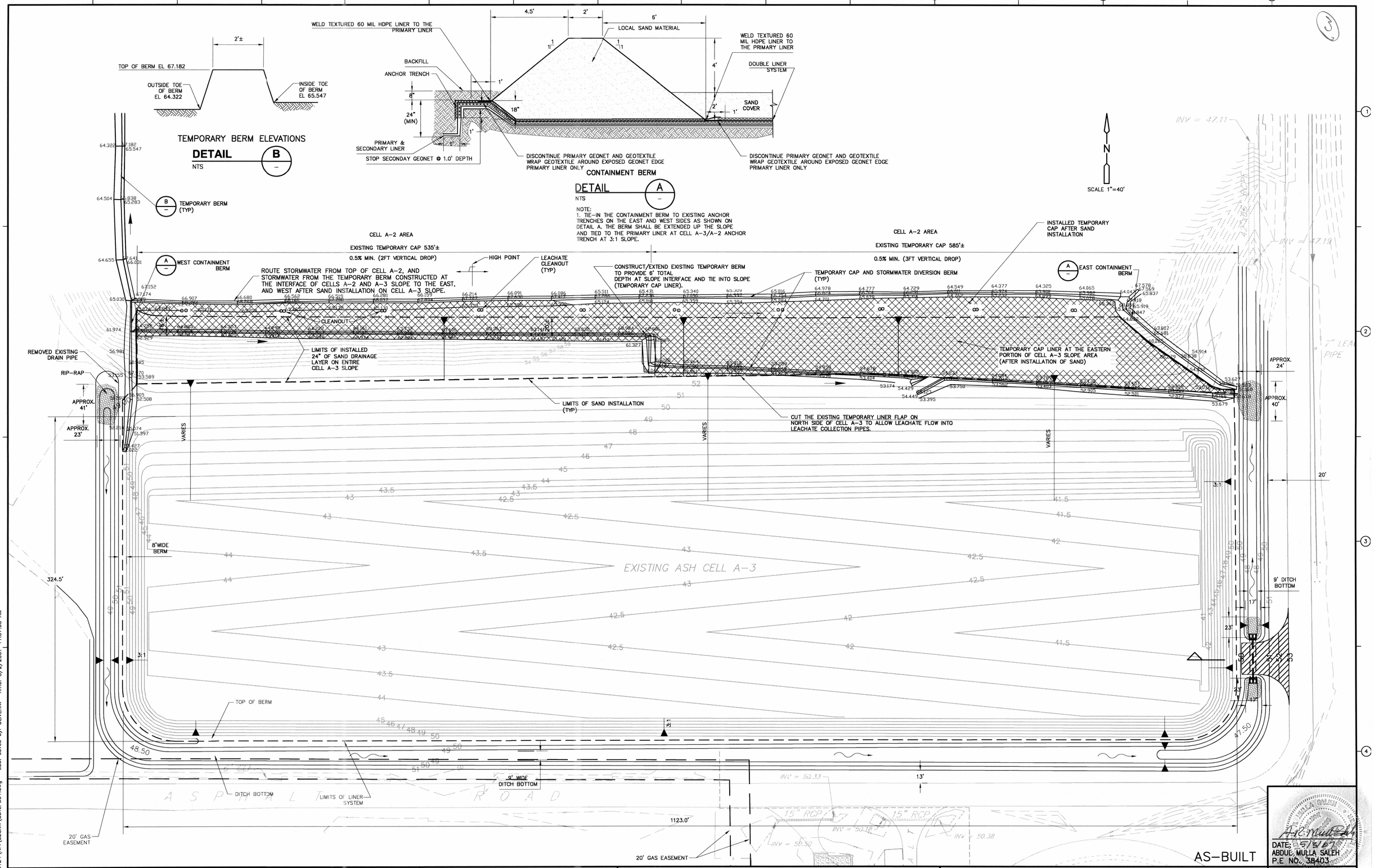

REV. NO.	DATE	DRWN	CHKD	REMARKS
1	04/07	IWO	AMS	AS-BUILT SAND PLACEMENT DIVERSION BERMS AND TEMPORARY CAP

DESIGNED BY: A. SONAWANE
DRAWN BY:
SHEET CHK'D BY: A.MULLA-SALEH
CROSS CHK'D BY: D. STROBRIDGE
APPROVED BY: A.MULLA-SALEH
DATE: JANUARY 2007

CDM Camp Dresser & McKee Inc.
consulting engineering construction operations
1715 North Westshore Blvd, Suite 875
Tampa, Florida 33607
Tel: 813-281-2900
License no. EB-0000020

PASCO COUNTY, UTILITIES SERVICES BRANCH
PASCO COUNTY FLORIDA

WEST PASCO COUNTY LANDFILL SAND INSTALLATION ON CELL A-3 LINED SLOPE

SAND INSTALLATION AREA AND CONTAINMENT BERMS

FLORIDA DEPARTMENT OF ENVIRONMENTAL PROTECTION
APR - 7 2007
SOUTHWEST DISTRICT TAMPA

PROJECT NO. 6104-55124
FILE NAME: CSTLFC01.dwg

SHEET NO.
C-1

Xref's: [TTEXT, CE-BASE1, C-BASEA, FCTPASCO, PASCO WEST LANDFILL ELEVATIONS, PASCO WEST LANDFILL LABELS, WEST PASCO CLEANOUTS2,] Images: []
Filename: L:\6104\55124\RFI\02Civil\CSTLFC01.dwg Last saved by: OLIVERW Time: 5/2/2007 11:07:00 AM

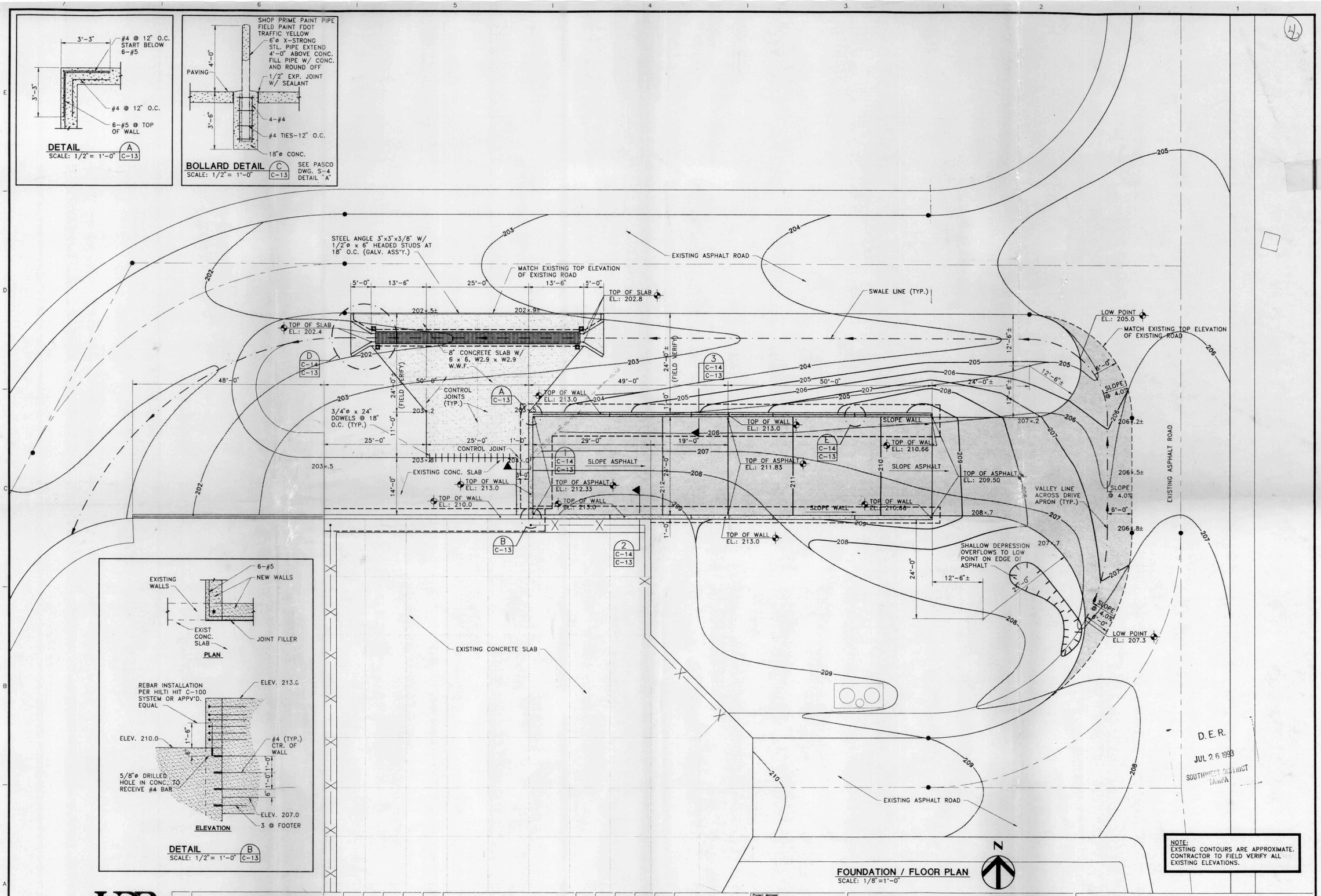

HDR

HDR Engineering, Inc.

Issue No.	Description	Date	Drwn.	Chkd.	Resp. Engr.	Proj. Mgr.
B	STRUCTURAL REVISIONS	2-93	DWG	DM	JB	RPS
A	BLUE BAG RECYCLING COLLECTION FACILITY	2-93	DWG			RPS

Project Manager: PETER STASIS 2-5-93
Architect
Civil: J. ROBERTS
Electrical
I&C/Process
Mechanical
Structural: J. BRITTAIN
Drawn By: D. GIBSON

PASCO COUNTY FLORIDA

East Pasco Recycling Center and Solid Waste Transfer Station

Blue Bag Recycling Collection Facility
Site / Foundation Plan

Date	Project NO.	Drawing No.	Issue
FEBRUARY, 1993	06849-012-096	C-13	B

Scale: AS NOTED

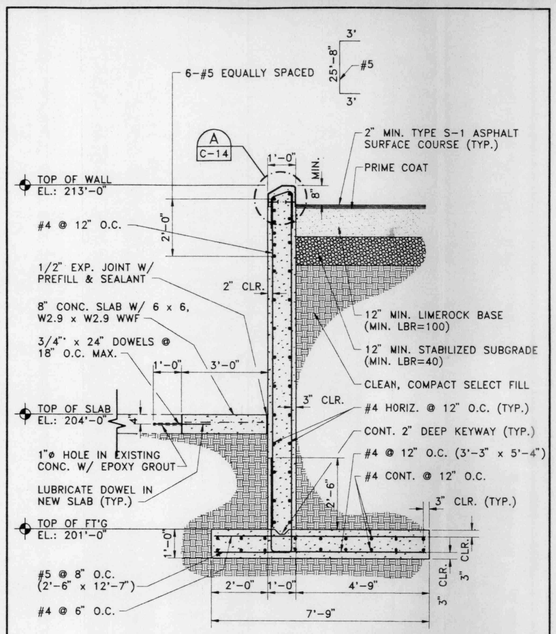

SECTION 1 (C-14 / C-13)
SCALE: 1/2"= 1'-0"

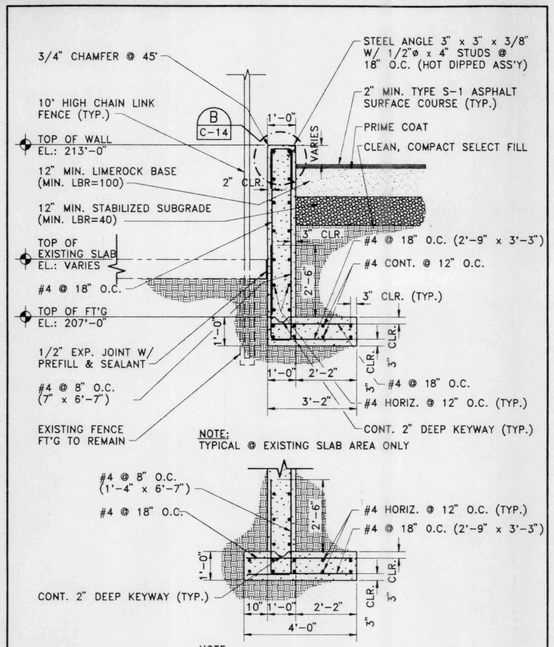

SECTION 2 (C-14 / C-13)
SCALE: 1/2"= 1'-0"

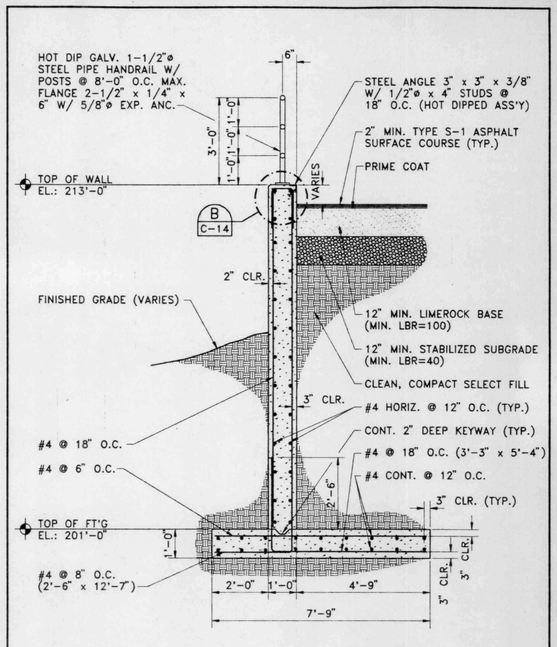

SECTION 3 (C-14 / C-13)
SCALE: 1/2"= 1'-0"

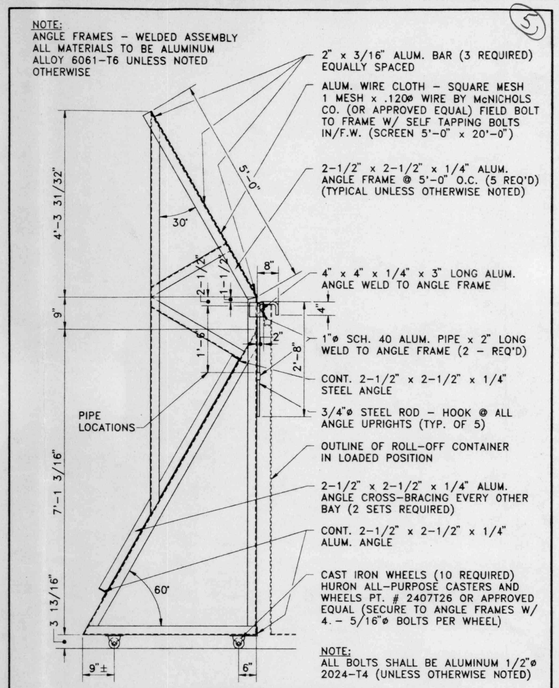

PORTABLE SCEEN DETAIL
SCALE: 3/4"=1'-0"
SEE PORTABLE SCREEN ELEVATION THIS DWG

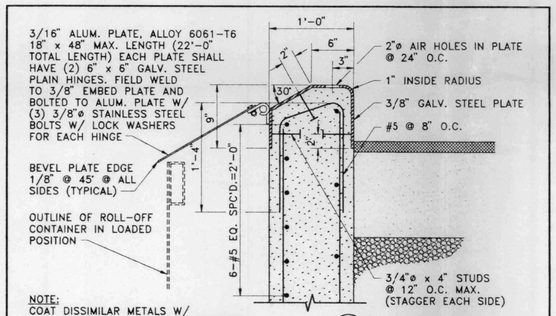

DETAIL A (C-14)
SCALE: 1-1/2"= 1'-0"

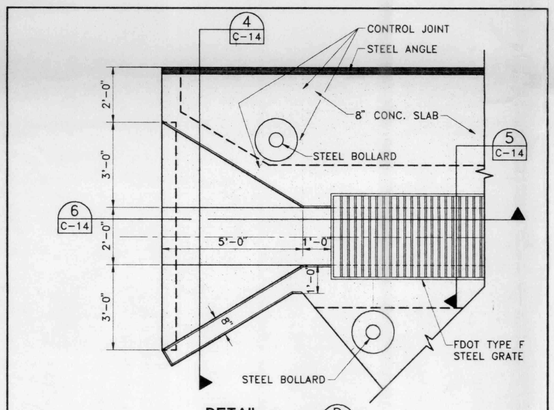

DETAIL D (C-14 / C-13)
SCALE: 1/2"=1'-0"

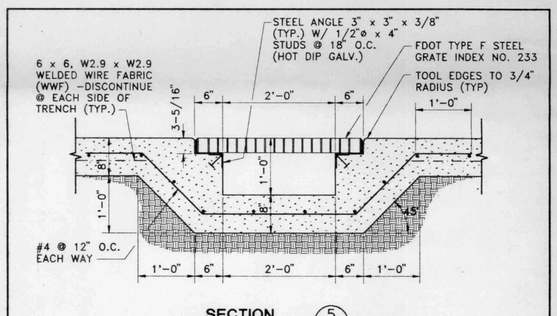

SECTION 5 (C-14)
SCALE: 1"= 1'-0"

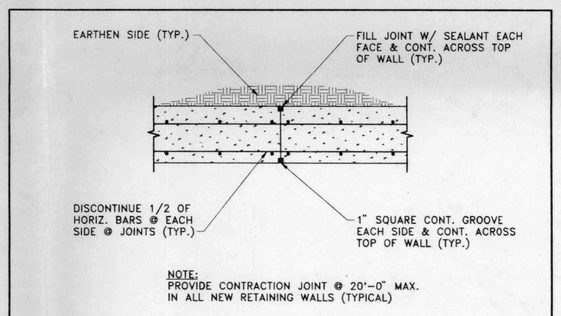

DETAIL E (C-14)
SCALE: 1"= 1'-0"

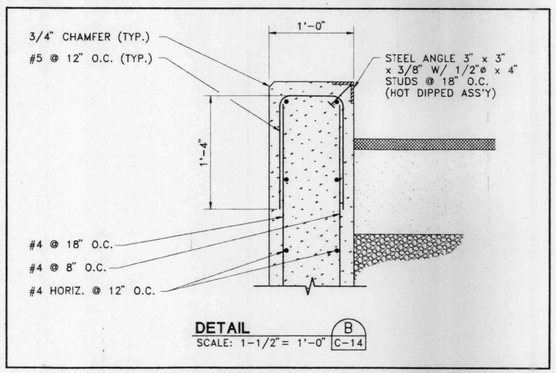

DETAIL B (C-14)
SCALE: 1-1/2"= 1'-0"

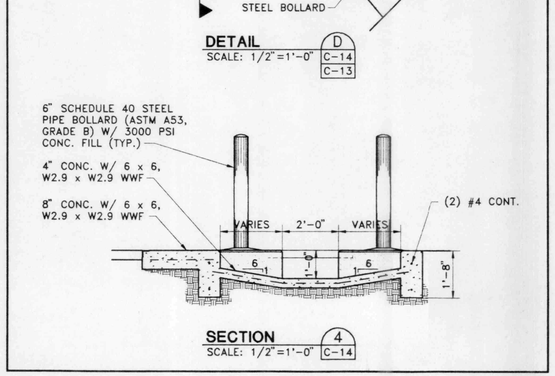

SECTION 4 (C-14)
SCALE: 1/2"=1'-0"

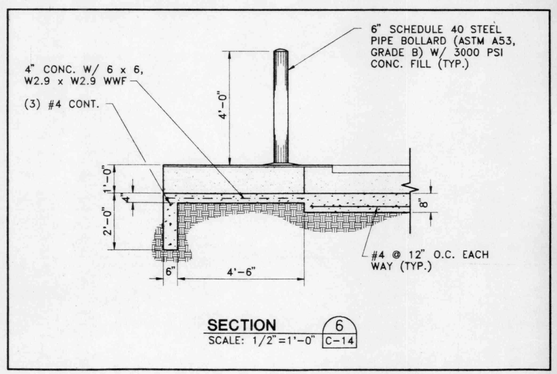

SECTION 6 (C-14)
SCALE: 1/2"=1'-0"

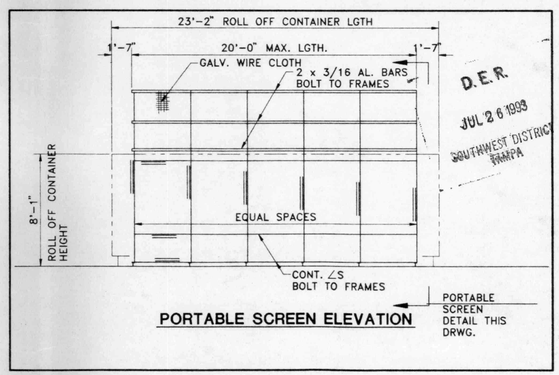

PORTABLE SCREEN ELEVATION

D.E.R.
JUL 26 1993
SOUTHWEST DISTRICT TAMPA

HDR

HDR Engineering, Inc.

Issue No.	Description	Date	Drwn.	Chkd.	Resp. Engr.	Proj. Mgr.
B	STRUCTURAL REVISIONS	2-93	DWG	DM	JB	RPS
A	BLUE BAG RECYCLING COLLECTION FACILITY	2-93	DWG			RPS

Project Manager: PETER STASIS 2-5-93
Architect
Civil: J. ROBERTS
Electrical
I&C/Process
Mechanical
Structural: J. BRITTAIN
Drawn By: D. GIBSON

PASCO COUNTY FLORIDA

East Pasco Recycling Center and Solid Waste Transfer Station

Blue Bag Recycling Collection Facility Foundation Sections and Details

Date: FEBRUARY, 1993
Scale: AS NOTED
Project No.: 06849-012-096
Drawing No.: C-14
Issue: B

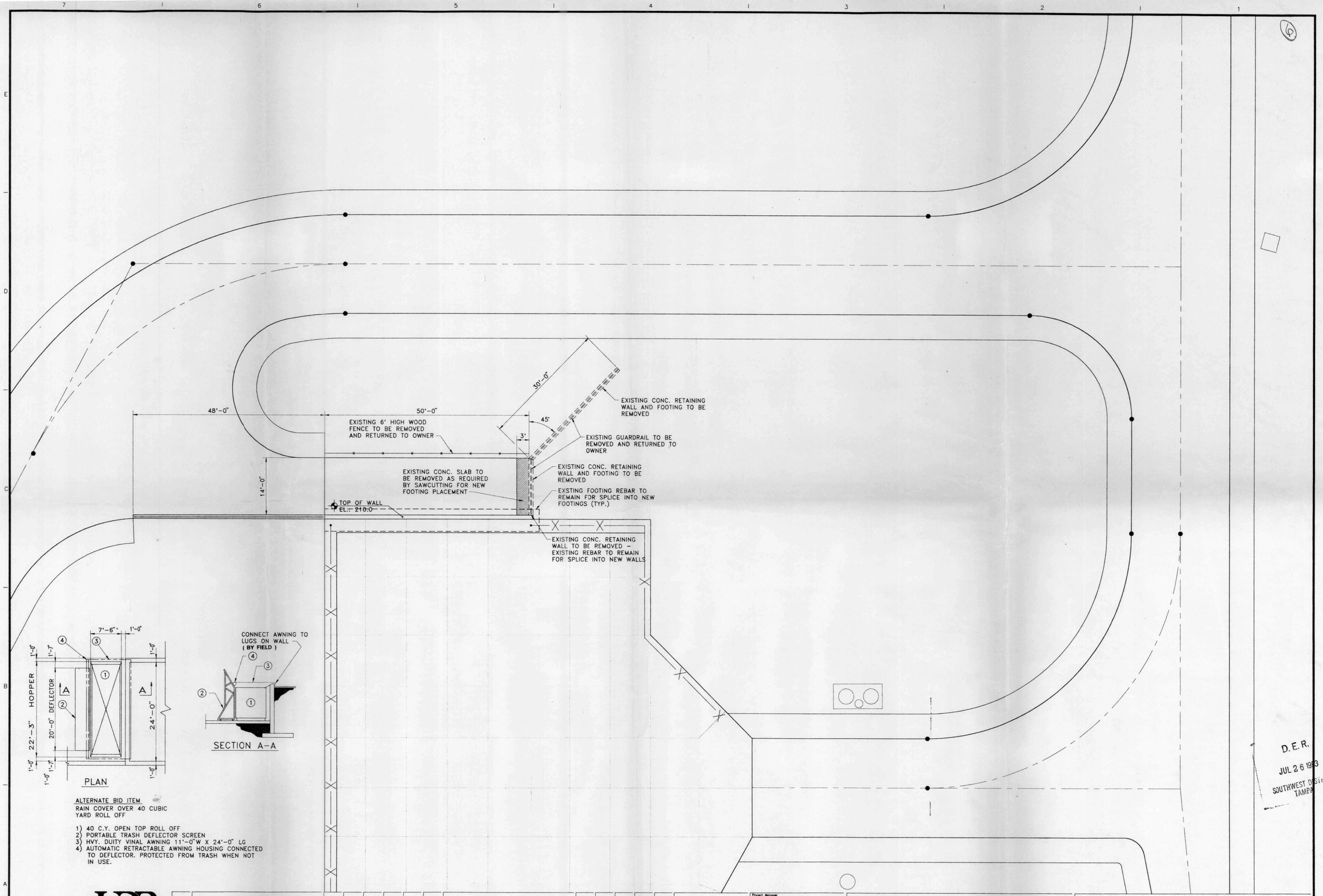

ALTERNATE BID ITEM
RAIN COVER OVER 40 CUBIC YARD ROLL OFF

1) 40 C.Y. OPEN TOP ROLL OFF
2) PORTABLE TRASH DEFLECTOR SCREEN
3) HVY. DUITY VINAL AWNING 11'-0"W X 24'-0" LG
4) AUTOMATIC RETRACTABLE AWNING HOUSING CONNECTED TO DEFLECTOR. PROTECTED FROM TRASH WHEN NOT IN USE.

D.E.R.
JUL 26 1993
SOUTHWEST DISTRICT
TAMPA

HDR

HDR Engineering, Inc.

Issue No.	Description	Date	Drwn.	Chkd.	Resp. Engr.	Proj. Mgr.
B	ALTERNATE BID ITEM RAIN COVER OVER 40 C.Y. ROLL OFF	5-93	DM			RPS
A	BLUE BAG RECYCLING COLLECTION FACILITY	2-93	DWG			RPS

Project Manager: PETER STASIS 2-5-93
Architect
Civil: J. ROBERTS
Electrical
HVAC/Process
Mechanical
Structural: J. BRITTAIN
Drawn By: D. GIBSON

East Pasco Recycling Center and Solid Waste Transfer Station

Blue Bag Recycling Collection Facility Demolition Plan

Date: FEBRUARY, 1993
Scale: AS NOTED
Project NO.: 06849-012-096
Drawing No.: D-1
Issue: B

JOINS PANEL 0115

JOINS PANEL 0125

SEE PANEL 0280

SEE PANEL 0285

ELEVATION REFERENCE MARKS

REFERENCE MARK	ELEVATION (FT, NGVD)	DESCRIPTION OF LOCATION
RM21	74.4	Florida State Road Department bronze disk on State Route 700, approximately 1.12 miles southeast of intersection of State Route 35-A and State Route 700, disk set in right headwall.

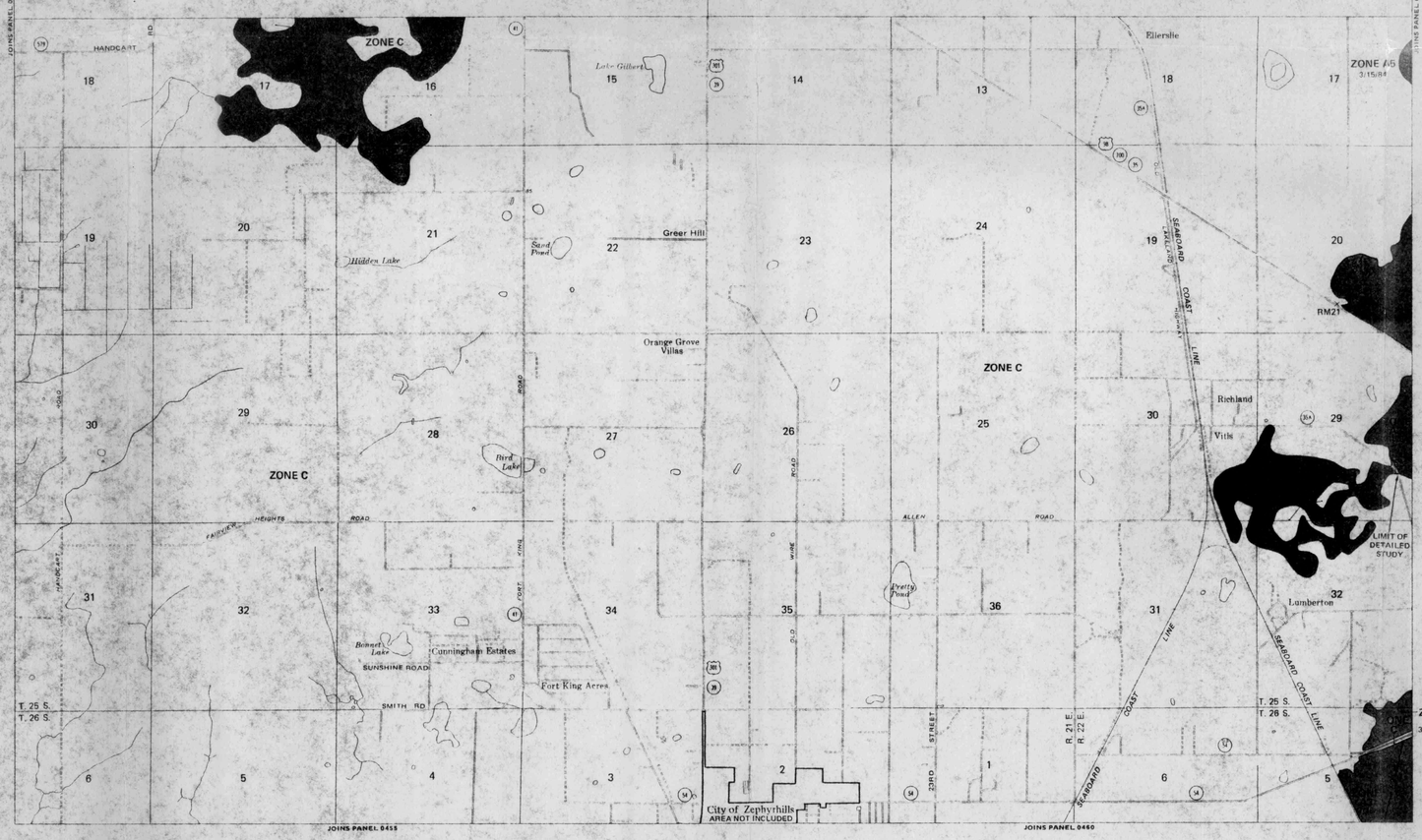

KEY TO MAP

500-Year Flood Boundary	
100-Year Flood Boundary	
Zone Designations* With Date of Identification e.g., 12/2/74	ZONE B / ZONE B
100-Year Flood Boundary	
500-Year Flood Boundary	
Base Flood Elevation Line With Elevation In Feet**	513
Base Flood Elevation in Feet Where Uniform Within Zone**	(EL 987)
Elevation Reference Mark	RM7 ×
Zone D Boundary	
River Mile	• M1.5

**Referenced to the National Geodetic Vertical Datum of 1929.

*EXPLANATION OF ZONE DESIGNATIONS

ZONE	EXPLANATION
A	Areas of 100-year flood; base flood elevations and flood hazard factors not determined.
AO	Areas of 100-year shallow flooding where depths are between one (1) and three (3) feet; average depths of inundation are shown, but no flood hazard factors are determined.
AH	Areas of 100-year shallow flooding where depths are between one (1) and three (3) feet; base flood elevations are shown, but no flood hazard factors are determined.
A1-A30	Areas of 100-year flood; base flood elevations and flood hazard factors determined.
A99	Areas of 100-year flood to be protected by flood protection system under construction; base flood elevations and flood hazard factors not determined.
B	Areas between limits of the 100-year flood and 500-year flood; or certain areas subject to 100-year flooding with average depths less than one (1) foot or where the contributing drainage area is less than one square mile; or areas protected by levees from the base flood. (Medium shading)
C	Areas of minimal flooding. (No shading)
D	Areas of undetermined, but possible, flood hazards.
V	Areas of 100-year coastal flood with velocity (wave action); base flood elevations and flood hazard factors not determined.
V1-V30	Areas of 100-year coastal flood with velocity (wave action); base flood elevations and flood hazard factors determined.

NOTES TO USER

Certain areas not in the special flood hazard areas (zones A and V) may be protected by flood control structures.

This map is for flood insurance purposes only; it does not necessarily show all areas subject to flooding in the community or all planimetric features outside special flood hazard areas.

For adjoining map panels, see separately printed Index To Map Panels.

Coastal base flood elevations apply only landward of the shoreline shown on this map.

Coastal base flood elevations shown on this map include the effects of wave action.

INITIAL IDENTIFICATION:
NOVEMBER 4, 1977

FLOOD HAZARD BOUNDARY MAP REVISIONS:

FLOOD INSURANCE RATE MAP EFFECTIVE:
NOVEMBER 19, 1981

FLOOD INSURANCE RATE MAP REVISIONS:
Map revised March 15, 1984 to change zone designations and to add base flood elevations.

To determine if flood insurance is available in this community, contact your insurance agent, or call the National Flood Insurance Program, at (800) 638-6620.

APPROXIMATE SCALE
2000 0 2000 FEET

NATIONAL FLOOD INSURANCE PROGRAM

FIRM
FLOOD INSURANCE RATE MAP

PASCO COUNTY, FLORIDA
(UNINCORPORATED AREAS)

PANEL 300 OF 500
(SEE MAP INDEX FOR PANELS NOT PRINTED)

COMMUNITY-PANEL NUMBER
120230 0300 C

MAP REVISED:
MARCH 15, 1984

Federal Emergency Management Agency

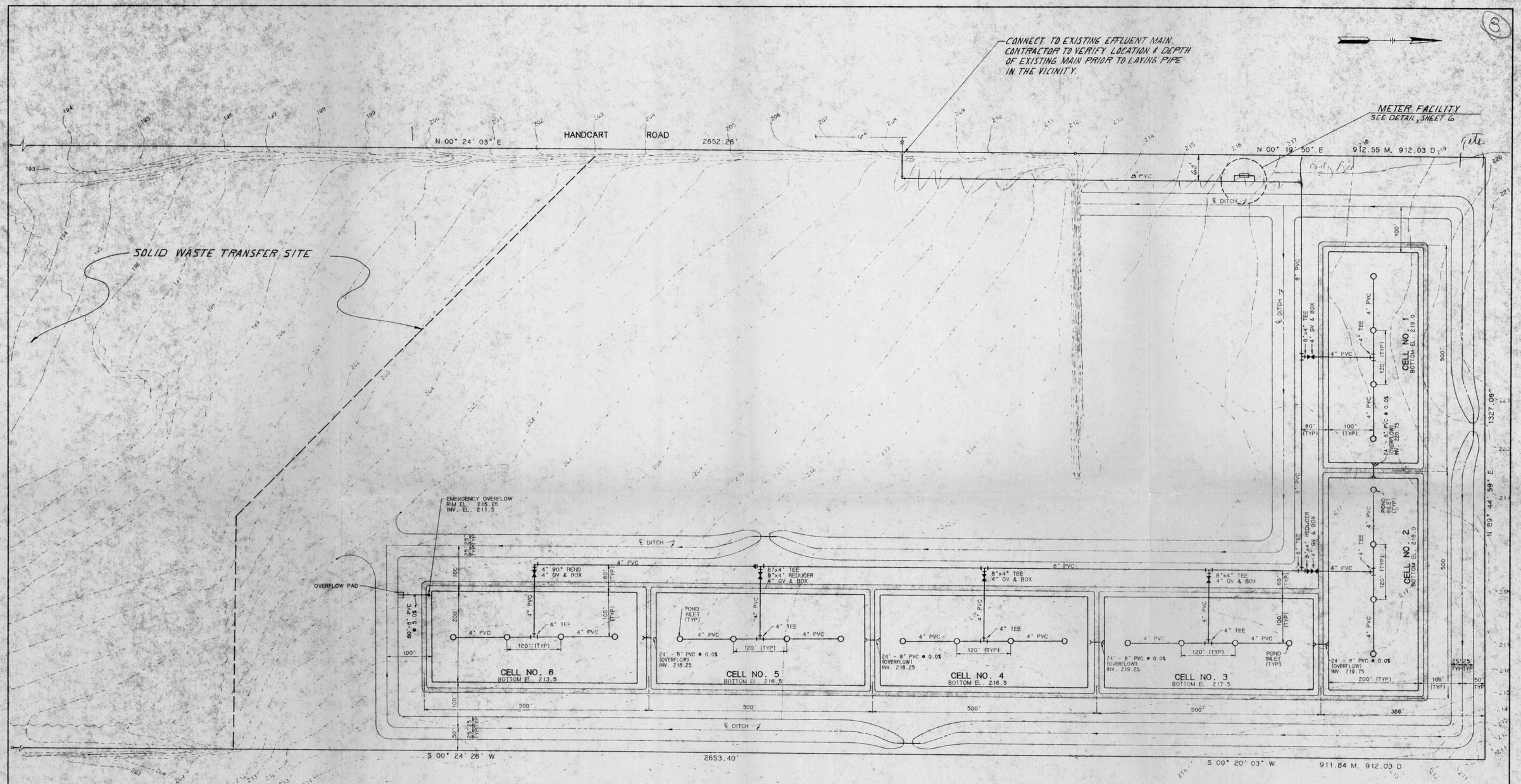

CAG\0544SH3\11-3-90

Knepper & Willard, Inc. Engineers Tampa, Florida	JOB No.	0544-88											
	DESIGNED	WHC											
	DRAWN	CAG											
	CHECKED	LCC	1	APR 1991	WHC	LCC	GENERAL REVISIONS						
	DATE	NOV 1990	No.	DATE	BY	APP	REVISION DESCRIPTION	No.	DATE	BY	APP	REVISION DESCRIPTION	

SCALE: 100 50 0 100 200

HANDCART ROAD
RAPID-RATE LAND APPLICATION SYSTEM

SITE PLAN - PIPING

SHEET NUMBER 3 OF 6 SHEETS

2276

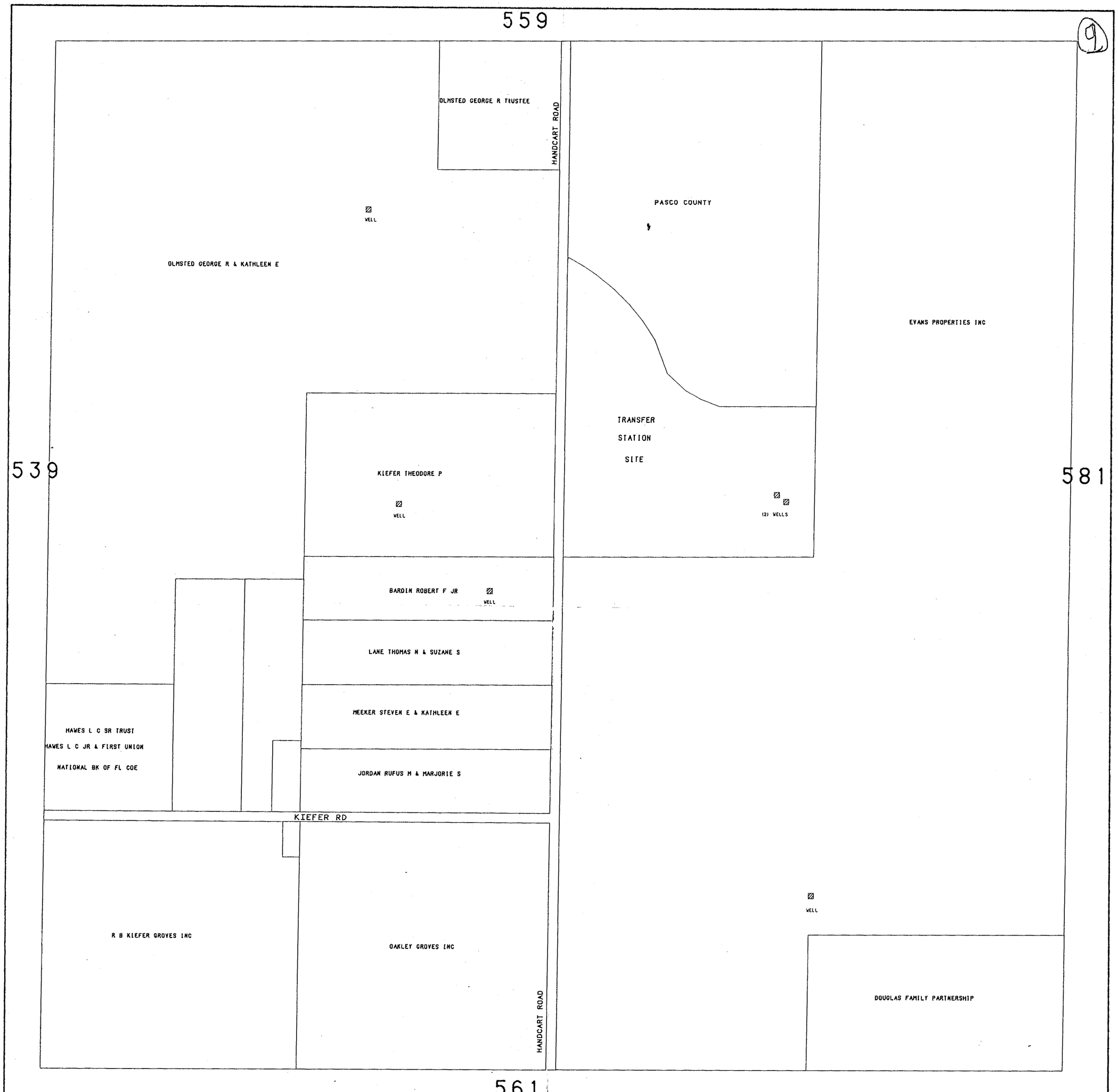

L E G E N D

- VALVE NO.'S
- FIRE HYDRANT No.'S
- WATER MAIN
- GATE VALVE
- REDUCER
- FIRE HYDRANT
- BLOW-OFF
- CHECK VALVE
- METER
- WELL

P A S C O C O U N T Y U T I L I T I E S S Y S T E M

M A P C O N T E N T S

S.E. SUBREG W.T.T. DISPOSAL SYSTEM PHASE I-A & PHASE I-B

Prepared by Pasco County Utilities Construction & Contract Management Dept.

WATER UTILITY MAP

SEC. 19 TWN. 25 RNG. 21

N

SCALE: 1"=400'

560

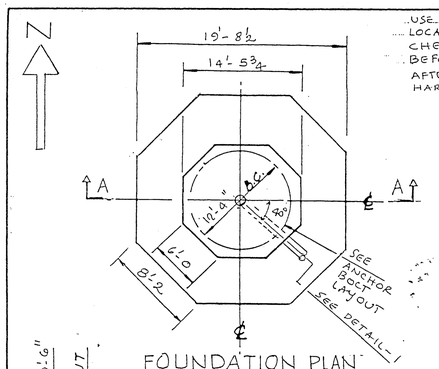

FOUNDATION PLAN

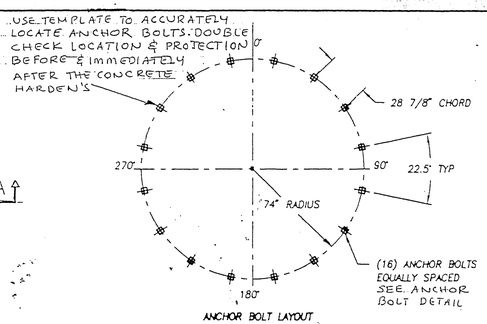

ANCHOR BOLT LAYOUT

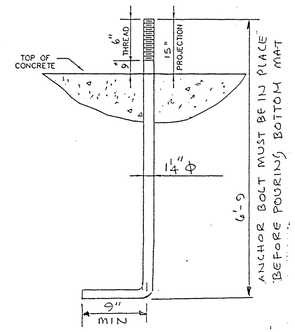

TYPICAL ANCHOR BOLT DETAIL

SCALE 3"=1'-0"

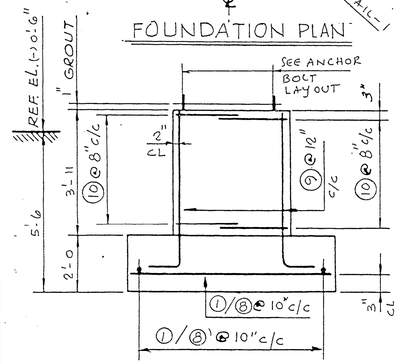

SECTION A-A

SEE REBAR PLAN FOR DETAILS & QUANTITY
FLOOR DRAIN NOT SHOWN

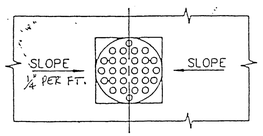

PLAN

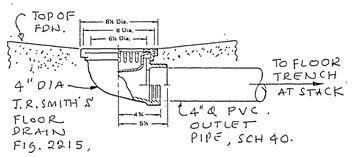

DETAIL-1

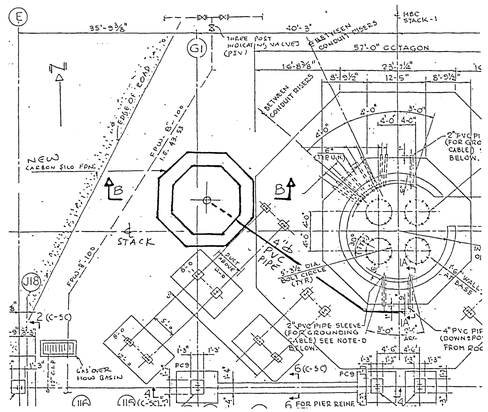

VICINITY FOUNDATION PLAN

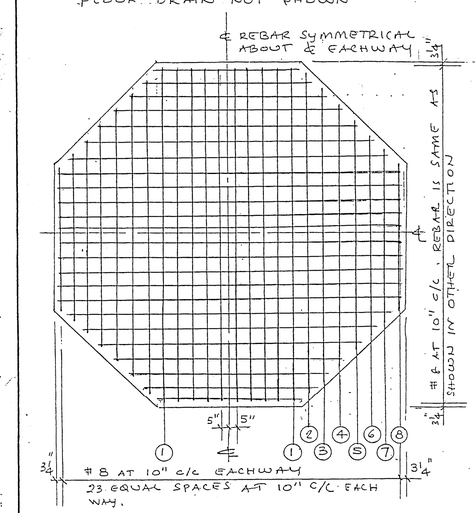

FOUNDATION REBAR PLAN

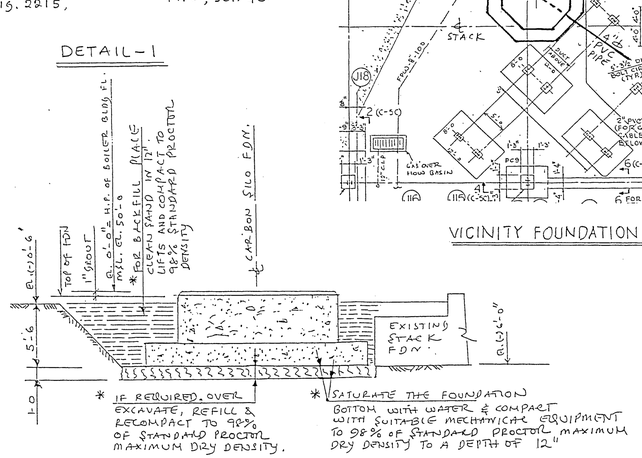

SECTION B-B

* REFER TO NOTES UNDER EXCAVATION & BACKFILL.

LOC. MARK	REROD CODE SIZE	TYPE	O	B	NO. REQD.
1	8	ST	19-4½	~	20
2	8	ST	18-4½	~	4
3	8	ST	16-8½	~	4
4	8	ST	15-0½	~	4
5	8	ST	13-4½	~	4
6	8	ST	11-8½	~	4
7	8	ST	10-0½	~	4
8	8	ST	8-4½	~	4
9	6	B	5'-5	9"	48
10	4	SEE REBAR PLAN			12

REBAR SCHEDULE

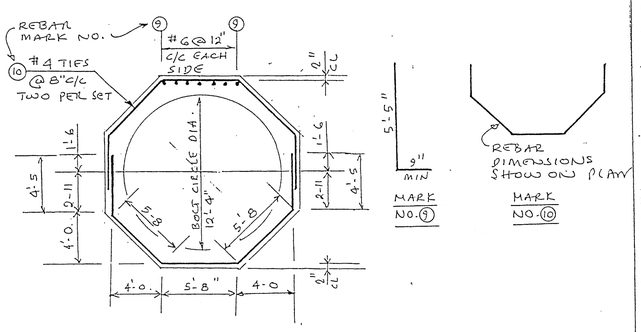

PEDESTAL REBAR PLAN

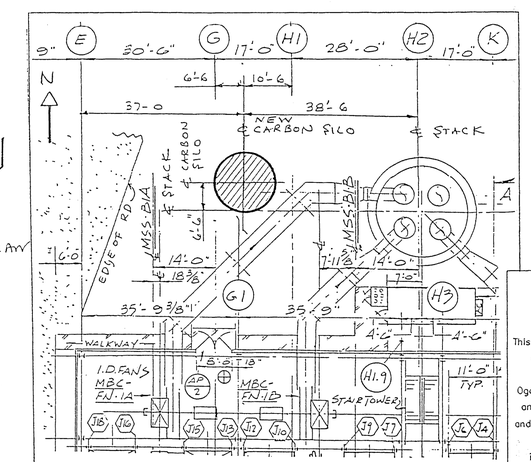

KEY PLAN

CONSTRUCTION NOTES

All construction shall conform with the provisions of the latest SBCCI Southern Building Code (1994), state and local laws and their supplements.

General

1. It is the Contractor's responsibility to satisfy himself as to location of any utilities in the immediate vicinity of construction (as shown on contract drawing) so as to prevent damage to them. Should any damage to such utilities occur, the Contractor shall repair such damage at his own expense and to the satisfaction of the owner.
2. The Contractor shall coordinate his construction schedule and plan of operation with the plant manager. Barricaded construction areas must be pre-approved by the plant manager.
3. The Contractor shall field check and verify all dimensions and elevations of existing work prior to fabrication of any new materials.
4. Contractor's work shall not interfere with plant activities in the immediate area.
5. Erosion and sediment control requirements shall comply with state and local sediment control law, current practices and applicable permit requirements.
6. The Contractor is responsible for temporary power and sanitary facilities.
7. Site work hours shall be agreed upon in consultation with the plant manager prior to starting work.
8. The Contractor shall supply all necessary tools, consumables and labor to conduct his work as described in the work scope and schedule.
9. The Contractor shall be responsible for supplying any lighting, scaffolding and welding equipment (gas powered machines only) in order to conduct his work. Hook-up for compressed air for hand tools shall be available at the site with hoses being the Contractor's responsibility.
10. A wash sink, toilets, telephones, lunch room, etc. shall be provided by contractor.
11. The Contractor shall staff the job with a field Superintendent. This individual shall be responsible for managing the field work to ensure quality assurance and interface with OMS of Pasco.
12. The Contractor and its employees shall at all times, while within the facility boundaries, obey the safety regulations and procedures. Failure to do so shall result in OMS of Pasco ejecting any and all individuals from the site at its discretion.

EXCAVATION & BACKFILL

1. The bottom of foundation shall rest on sound and firm soil capable of withstanding the specified soil bearing pressure. Compaction of in-situ soil is required prior to foundation placement. Removal of local soft spots shall be replaced with compacted structural fill. Required soil bearing pressure is 2000 psf. Contractor is required to dispose of unsuitable material.
2. Existing stack foundation, ID fan and duct work & their supports shall be adequately supported and protected during excavation and placement of silo foundation.
3. Foundation footprint shall be stripped of all surface vegetation, debris, deleterious materials etc. as encountered.
4. Over excavated areas resulting from the removal of underground structures shall be backfilled with suitable fill and compacted as noted below.
5. Proof-compact the bottom of foundation excavation to increase density of loose fine soils within the top 2 to 3 feet. Due to the close proximity of existing structures, heavy vibratory compaction equipment shall not be used. Foundation soils should be saturated with water prior to compaction. Proof-compacting shall consist of at least 10 passes of a compactor capable of achieving at least 98 percent of the standard proctor maximum dry density value for a minimum depth of one foot beneath the bottom of the excavation.
6. If necessary, the bottom of the footing excavation shall be over excavated, refilled and recompacted with mechanical equipment to achieve the necessary minimum field density to the required depth.
7. The soil moisture should be adjusted as necessary during compaction.
8. Verify the in-place compaction for a depth of one foot below the foundation bottom just prior to concrete placement. If necessary, compact the bottom of the excavations to achieve a minimum dry density equivalent to 98 percent of the standard Proctor maximum dry density for a depth of one foot below the foundation bottom.
9. Backfill around the foundation, up to grade, shall consist of clean sand in 12" lifts and compacted to 98% of standard proctor density.
10. A Quality Assurance program shall be implemented by the contractor.
11. Soils report by Ardaman and Associates dated 4/27/95 shall be a part of the foundation, excavation, backfill, compaction, etc. contract. (See Attachment)

CONCRETE NOTES

1. Design and construction shall conform to the American Concrete Institute (ACI) 318-89 (Revised 1992) "Building Code Requirements for Reinforced Concrete".
2. Ultimate compressive strength of concrete at 7 days shall be 4000 psi. Contractor must submit a trial concrete mix design and supporting cylinder break test results to OMS for review and approval before work commences.
3. The following minimum concrete cover shall be provided for reinforcement, U.O.N.
   A. Concrete cast against and permanently exposed to earth.....3 in.
   B. Concrete exposed to earth or weather: (formed surfaces)
      I. #6 through #11 bars.....2 in.
      II. #5 bar, W31 or D31 wire and smaller.....1½ in.
4. Continuous reinforcement #11 and smaller shall be lapped at splices. Lap length shall not be less than Class B splice unless otherwise noted (U.O.N.). Welding of reinforcing bars shall not be permitted.
5. All exposed concrete corners above grade shall have a one inch chamfer.
6. Reinforcing bars shall be deformed bars conforming to ASTM A615, "Deformed and plain billet-steel bars for concrete reinforcement", latest edition, grade 60, U.O.N.
7. Anchor bolts shall conform to ASTM A36 material U.O.N.
8. Detailing of reinforcing material shall conform to the requirements of ACI 315-89. Details for bending are given on this drawing.
9. Fabrication of reinforcing material shall conform to CRSI, "Manual of Standard Practice".
10. Concrete construction shall be in accordance with ACI-301. Surfaces above ground to be parged upon removal of forms.
11. All horizontal concrete surfaces shall receive a trowel finish and sloped to facilitate drainage.

INSPECTION AND TESTS

The Contractor shall arrange for a reinforcement & formwork inspection and approval by OMS prior to start of concrete pour. A minimum of 2 days notice is required.

Concrete compressive strength tests shall be conducted as follows:

2 at 3 days, 2 at 7 days, 2 at 28 days (reserve) for each pour.

For Design & Engineering inquires contact Ogden at (201) 882-7291, Mr. Suri Netrabile or Pat Mirrione.

CARBON SILO DATA FURNISHED BY THE VENDOR

1)	Silo Empty Weight	=	29,645	LBS
2)	Silo Operating Weight	=	129,849	LBS
3)	Wind Speed - 100 MPH, Exposure -C			
	- Overturning Moment	=	378,342	FT. LBS
	-Horizontal Shear	=	12,736	LBS
4)	Seismic - Zone -1			
	- overturning Moment	=	74,519	FT. LBS
	- Horizontal Shear	=	2,406	LBS

REVISIONS

0 ISSUED FOR CONSTRUCTION
DATE 6/20/95 APP'D. PJM

10

D.E.P.
JAN 29 1996

1028-S-001-13-001

COMPANY CONFIDENTIAL

This drawing and all information contained herein are the property of Ogden Engineering Services, Inc. and it's affiliates of any tier and are not to be used except as expressly authorized in writing by the company.

Patrick J. Mirrione 6/20/95

CARBON SILO-MERCURY CONTROL SYSTEM
FOUNDATION PLAN & DETAILS
OMS OF PASCO INC.

OGDEN ENGINEERING SERVICES, INC.
AN OGDEN PROJECTS COMPANY

DRAWN	DATE	DESIGNED	DATE	PROJECT NO.
SN	6/5/95	SN	6/2/95	K-1028 G
APPROVED	DATE	DRAWING NO.		REV.
PJM	6/20/95	1028-S-001		0

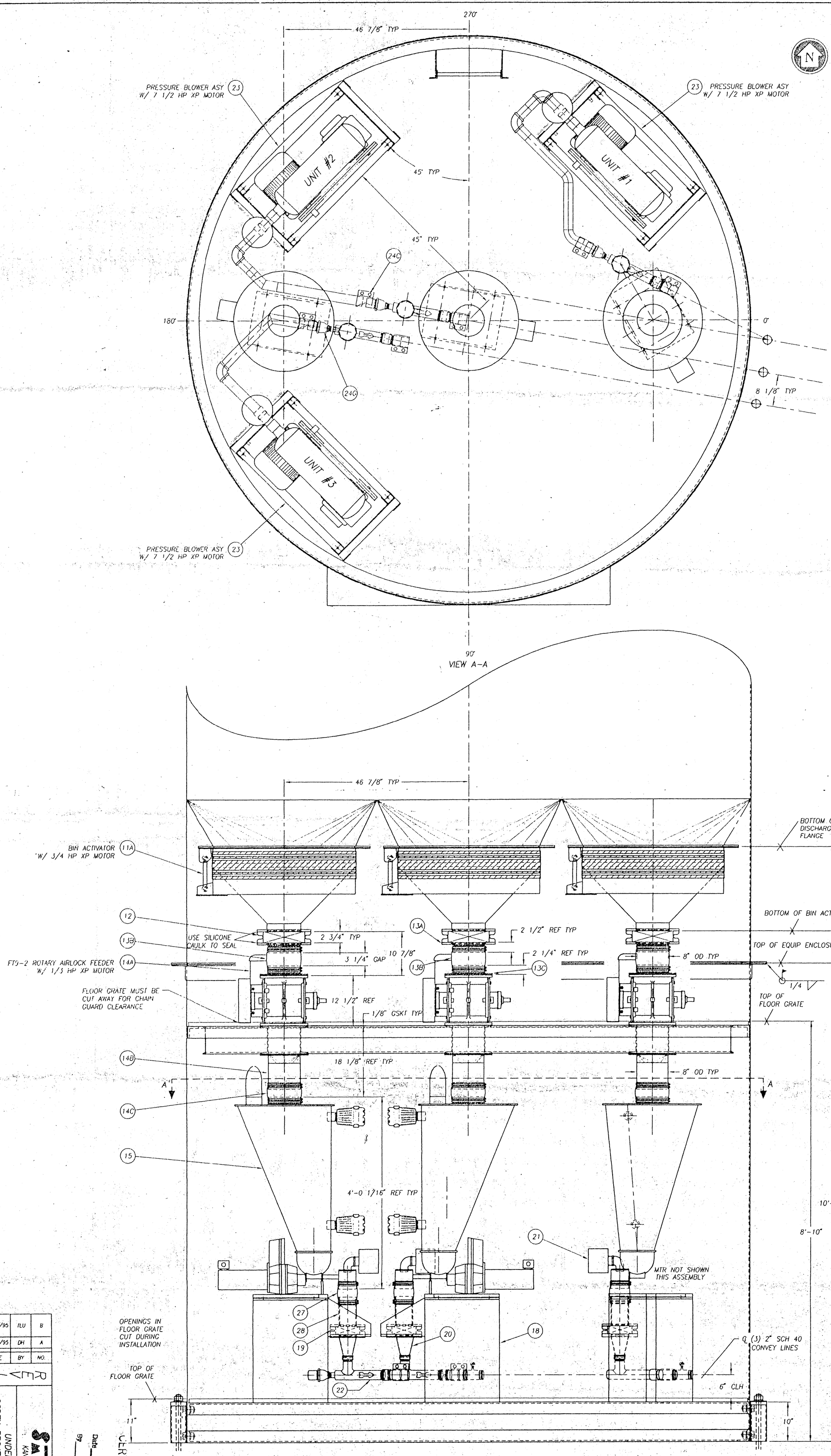

REMARKS	DATE	BY	NO.
REV'D ITEM #20 ADD ITEM NO.	06/26/95	TLU	B
Rev'd Per Cust	06/07/95	DH	A

REVISIONS

SMOOT CO.
KANSAS CITY, KANSAS

UNDER SILO STACK UP
OGDEN PROJECTS PO# CMX-1028-001
PASCO COUNTY PROJECT
SPRING HILL, FL

DATE 05/09/95
DWN. BY DH
SCALE 1"=1'-0"
DWG. NO. 14297-S2_1
APPROVED
Sheet 1 of 2

CERTIFIED CORRECT
SMOOT CO.
Date 8/8/5
By TFB

(11)

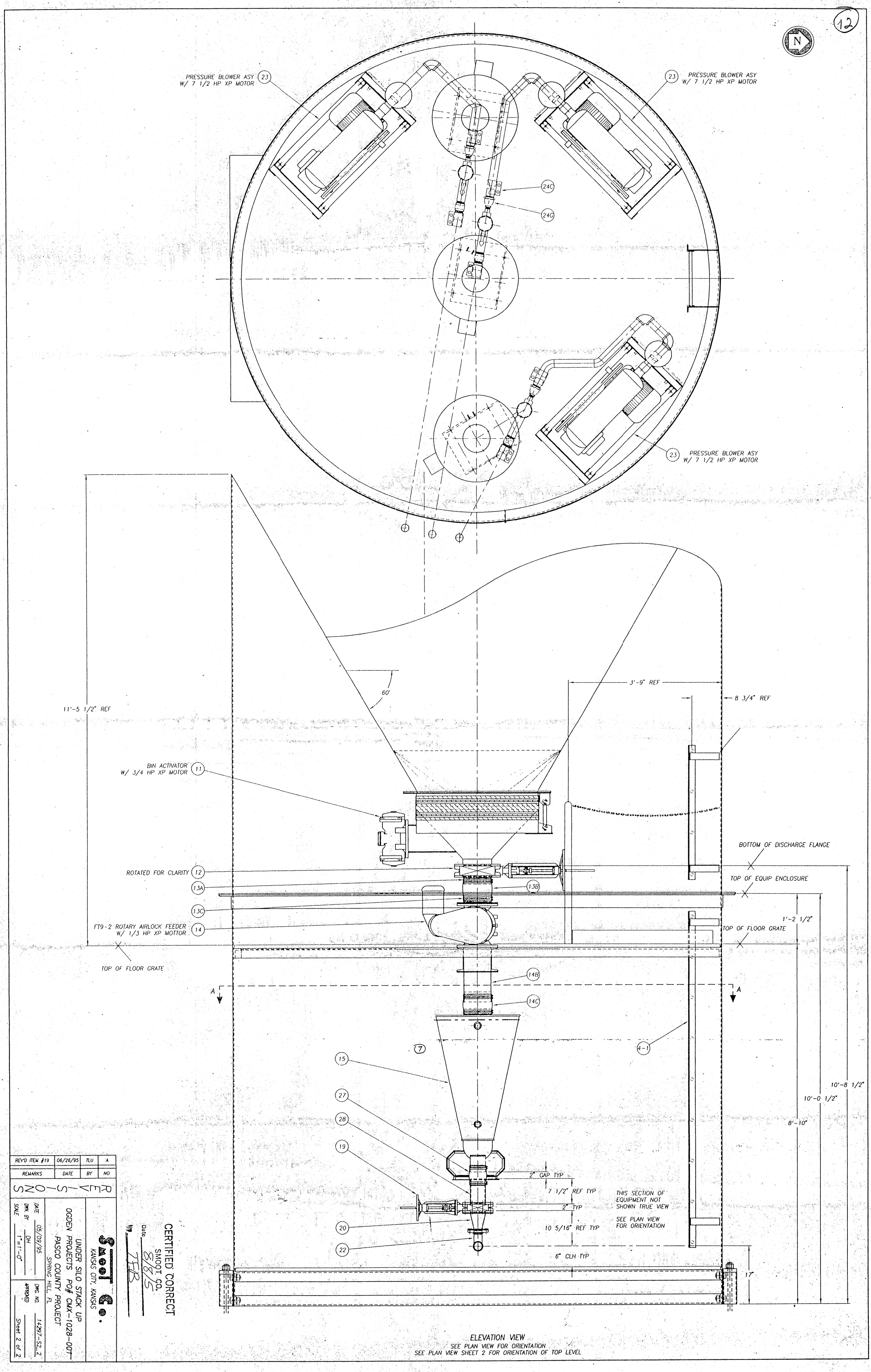

REV'D ITEM #19	06/26/95	TLU	A
REMARKS	DATE	BY	NO

REVISIONS

SMOOT CO.
KANSAS CITY, KANSAS

UNDER SILO STACK UP
OGDEN PROJECTS PO# CMX-1028-00T
PASCO COUNTY PROJECT
SPRING HILL, FL

DATE 05/09/95
DWN. BY DH
SCALE 1"=1'-0"
DWG. NO. 14297-S2_2
APPROVED
Sheet 2 of 2

CERTIFIED CORRECT
SMOOT CO.
Date 8/8/95
By TFB

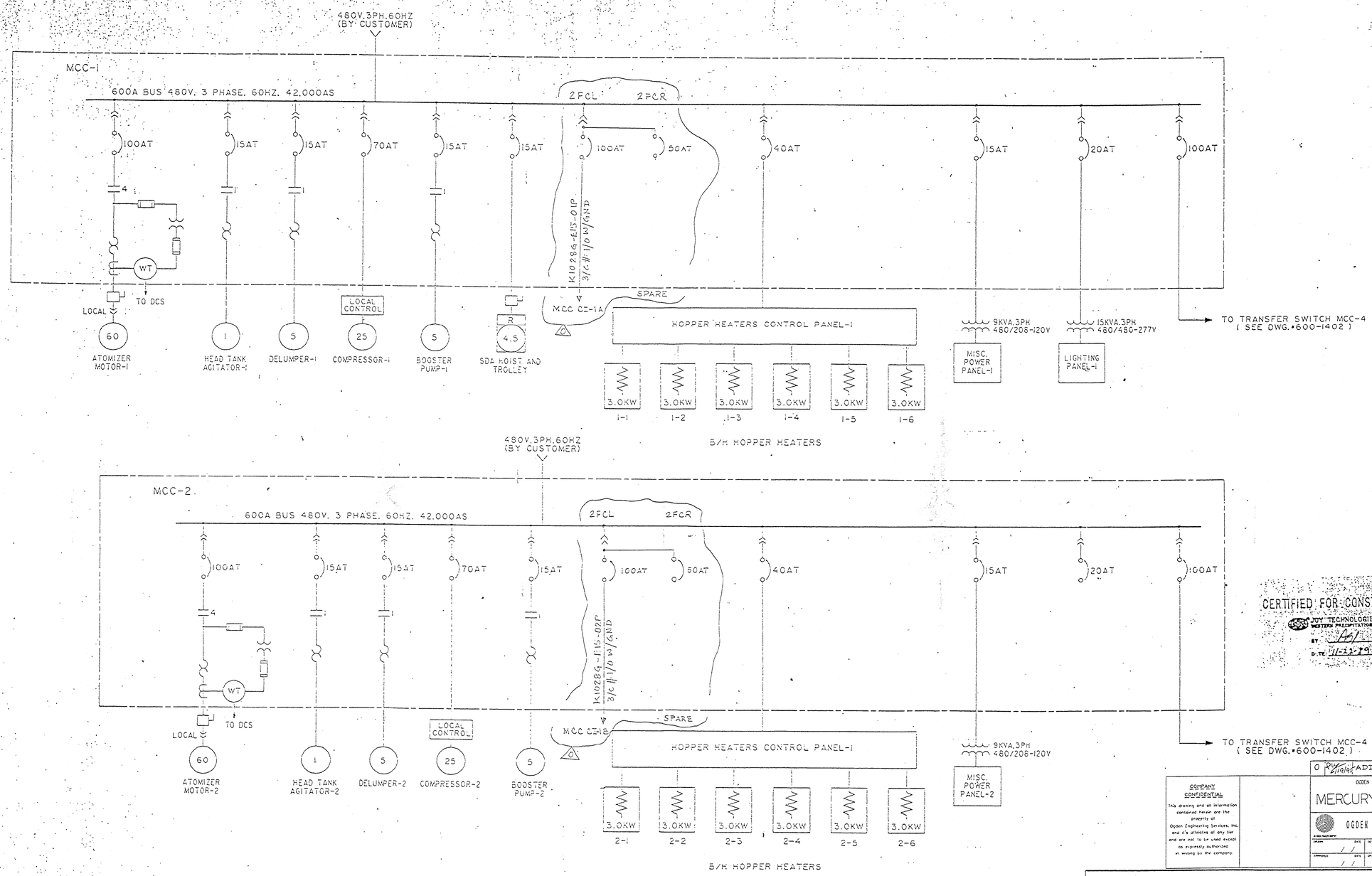

CERTIFIED FOR CONSTRUCTION
JOY TECHNOLOGIES INC.
WESTERN PRECIPITATION DIVISION
BY: [illegible]
DATE: 11-22-89

REV.	DATE	PRELIMINARY ISSUE	BY	APP	APP	REV. NO.	DATE	REV. BY	CKD. BY	ENG. APP	ENG. APP	REVISION RECORD
						1	11-15-89	JTF	VAD	VAD		CHGD ATOMIZER & STARTER SIZE
						0	8-24-89	JTF	VAD	VAD.		GENERAL REVISION

DRAWN BY	DNO	4-10-89
CHECKED BY	VAD	4-11-89
ENGINEER	VAD	4-11-89
CHIEF ENG.	VAD	4-11-89
PROJ. ENG.		

UNLESS SHOWN OTHERWISE, DIMENSIONS ARE IN INCHES AND THE FOLLOWING TOLERANCES SHALL APPLY.

TOLERANCES

FRACTIONS	DECIMAL	ANGULAR
LINEAR ±	.XX = ±	± °
DIAMETERAL ±	.XXX = ±	

JOY TECHNOLOGIES INC.
WESTERN PRECIPITATION DIVISION
MONROVIA, CALIFORNIA, U.S.A.

THIS DRAWING WITH ALL THE INFORMATION HEREON IS THE PROPERTY OF JOY TECHNOLOGIES INC. AND MUST NOT BE MADE PUBLIC OR COPIED OR USED IN ANY WAY DETRIMENTAL TO JOY'S INTEREST, UNLESS FURNISHED UNDER CONTRACT PROVISIONS. IT IS LOANED SUBJECT TO RETURN ON DEMAND.

MCC-1 AND MCC-2
SINGLE LINE DIAGRAM

SCALE: NONE
DRAWING NO.
JOB: 89-078
DWG: 600-1401
REV: 1

0	[illegible] 11/19/91	ADDED FEEDER BREAKERS	

COMPANY CONFIDENTIAL
This drawing and all information contained herein are the property of Ogden Engineering Services, Inc. and it's affiliates at any tier and are not to be used except as expressly authorized in writing by the company.

OGDEN MARTIN SYSTEMS OF PASCO INC.
MERCURY CONTROL
OGDEN ENGINEERING SERVICES, INC.
A BBC PACE GROUP

DRAWN	DATE	DESIGNED	DATE	PROJECT NO
	/ /		/ /	K-10286
APPROVED	DATE	DRAWING NO.		REV.
	/ /	K-10286-E15		0

OGDEN MARTIN SYSTEMS OF PASCO, INC.
PASCO COUNTY RESOURCE RECOVERY FACILITY
PASCO COUNTY, FLORIDA

RECEIVED
MAR 27 1990
[illegible]

WP:FE89078.600(10)(C) 3-21-90

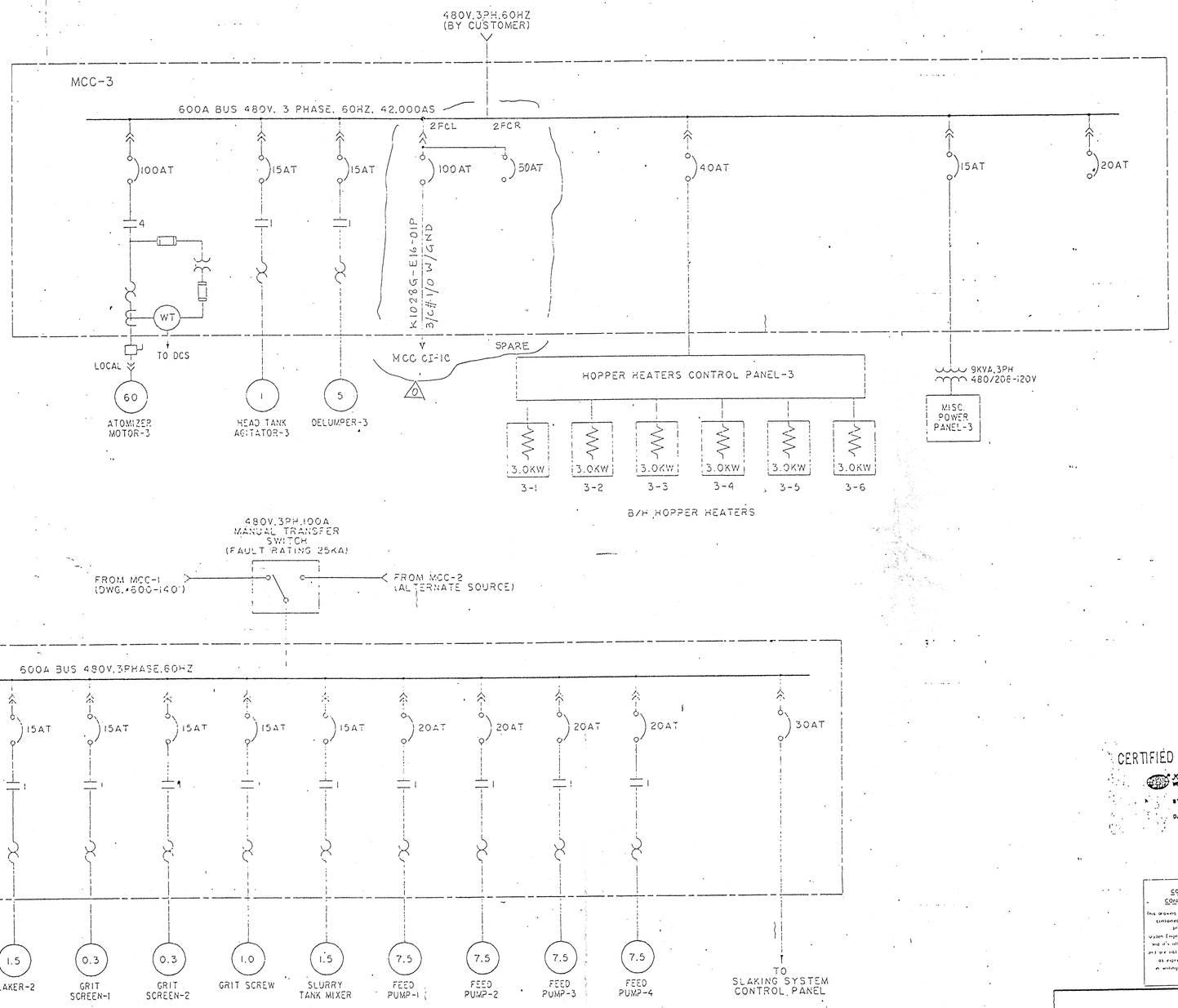

CERTIFIED FOR CONSTRUCTION
JOY TECHNOLOGIES INC.
WESTERN PRECIPITATION DIVISION
BY AB
DATE 11-22-89

REV.	DATE	PRELIMINARY ISSUE	BY	APP	APP

REV. NO.	DATE	REV. BY	CKD. BY	ENG. APP.	ENG. APP.	REVISION RECORD
1	11-15-89	JTF	VAD	VAD		REVISED PUMP AND ATOMIZER
0	8-24-89	JTF	VAD	VAD		GENERAL REVISION

DRAWN BY	DNO	4-10-89
CHECKED BY	VAD	4-11-89
ENGINEER	VAD	4-11-89
CHIEF ENG.	VAD	4-11-89
PROJ. ENG.		

UNLESS SHOWN OTHERWISE, DIMENSIONS ARE IN INCHES AND THE FOLLOWING TOLERANCES SHALL APPLY.

TOLERANCES

	DECIMAL	ANGULAR
FRACTIONS	.XX = ±	±
LINEAR ±	.XXX = ±	
DIAMETERAL ±		

JOY TECHNOLOGIES INC.
WESTERN PRECIPITATION DIVISION
MONROVIA, CALIFORNIA, U.S.A.

THIS DRAWING WITH ALL THE INFORMATION HEREON IS THE PROPERTY OF JOY TECHNOLOGIES INC. AND MUST NOT BE MADE PUBLIC OR COPIED OR USED IN ANY WAY DETRIMENTAL TO JOY'S INTEREST, UNLESS FURNISHED UNDER CONTRACT PROVISIONS. IT IS LOANED SUBJECT TO RETURN ON DEMAND.

MCC-3 AND MCC-4
SINGLE LINE DIAGRAM

SCALE: NONE
DRAWING NO.
JOB 89-078
DWG. 600-1402
REV. 1

0 | PVZ 6/19/90 | ADDED FEEDER BKRS

COMPANY CONFIDENTIAL
This drawing and all information contained herein are the property of Ogden Engineering Services, Inc and its affiliates of any kind and are not to be used except as expressly authorized in writing by the company.

OGDEN MARTIN SYSTEMS OF PASCO INC.
MERCURY CONTROL
OGDEN ENGINEERING SERVICES, INC.
DRAWN / DATE / / | DESIGNED / DATE / / | PROJECT No. K-10280
APPROVED / DATE / / | DRAWING No. K-10280-E16 | REV. 0

OGDEN MARTIN SYSTEMS OF PASCO, INC.
PASCO COUNTY RESOURCE RECOVERY FACILITY
PASCO COUNTY, FLORIDA

RECEIVED
MAR 2 1 1990
OMSP

WP\EE89078.600.1402 4-10-89

LAW

ENGINEERING AND ENVIRONMENTAL SERVICES, INC.

PROJECT MANUAL
FOR
INTERMEDIATE COVER FOR CELL A-1
WEST PASCO LANDFILL
AT
RESOURCE RECOVERY FACILITY

BID NO. 98-___

Prepared For:

PASCO COUNTY
BOARD OF COUNTY COMMISSIONERS
UTILITY SERVICES
NEW PORT RICHEY, FLORIDA 34654

Prepared By:

LAW ENGINEERING AND ENVIRONMENTAL SERVICES, INC.
4919 WEST LAUREL STREET
TAMPA, FLORIDA 33607

DECEMBER 1997

H:\USERS\40140\REPORT\SPECS\T4170317.V2.DOC

LAW PROJECT 40141-7-0317 COPY NO. _____ VOLUME 2 OF 2

TABLE OF CONTENTS

VOLUME 2		PAGE
Section 01000	General Requirements	01000-1
Section 02010	Temporary Erosion and Sediment Control	02010-1
Section 02280	Geomembrane	02280-1
Section 02485	Sodding and Seeding	02485-1

RECEIVED
JAN 07 1998
D E P

SECTION 01000

GENERAL REQUIREMENTS

PART 1 - GENERAL

1.01 SCOPE

A. Description of Work: The project consists of installing a geomembrane on ash cell A-1 and other work shown in the drawings. The work included herein consists of furnishing all labor, materials, equipment and incidentals required.

B. Coordinate and schedule all phases of the Work of the Contract Documents with OWNER, ENGINEER, subcontractors, material suppliers and other parties as necessary to ensure the smooth and orderly transition of separate phases, timely placement of items and materials, complete cooperation between parties and proper execution of the Work.

C. Provide special attention and precautions as specified herein when coordinating and scheduling portions of the Work.

D. Maintain the site in a standard of cleanliness throughout the construction period as described in this Section.

1.02 SUBMITTALS

A. After checking and verifying all quantities, dimensions, specified performance criteria, installation requirements, materials and similar data, submit samples, certifications and other product data to the ENGINEER for review.

B. ENGINEER's review will be only for conformance with the design concept of the Work and for compliance with the information given in these specifications.

C. Make submittals far enough in advance of scheduled dates for commencements, installations or execution to allow for reviews, for securing necessary approvals, and for possible revisions and resubmittals.

D. CONTRACTOR shall be responsible for delays resulting from incomplete submittals.

1.03 PROJECT RECORD DOCUMENTS

A. Maintain on site, one set of the following record documents; record actual revisions to the Work:

1. Contract Drawings.

2. Specifications.

3. Addenda.

4. Change Orders and other Modifications to the Contract.

5. Reviewed shop drawings, product data, and samples.

B. Store Record Documents separate from documents used for construction.

C. Record information concurrent with construction progress.

D. Specifications: Legibly mark and record at each Product Section description of actual Products installed, including the following:

1. Manufacturer's name and product model and number.

2. Product substitutions or alternates utilized.

3. Changes made by Addenda and Modifications.

E. Record Documents and Shop Drawings: Legibly mark each item to record actual construction including:

1. Measured depths of foundations in relation to finish (first) (main) floor datum.

2. Measured horizontal and vertical locations of underground utilities and appurtenances, referenced to permanent surface improvements.

3. Measured locations of internal utilities and appurtenances concealed in construction, referenced to visible and accessible features of the Work.

4. Field changes of dimension and detail.

F. Delete ENGINEER title block (and seal) from all documents.

G. Submit documents to ENGINEER with claim for final Application for Payment. This payment will not be processed until record documents are deemed satisfactory by the ENGINEER.

No separate payment will be made for preparation of record drawings.

1.04 APPLICATION FOR PAYMENT

Refer to Volume 1 of the Project Manual.

PART 2 - PRODUCTS

2.01 SUBMITTALS

A. The CONTRACTOR shall submit to the ENGINEER for review and exception, test reports and data on materials and equipment specified elsewhere in the Specifications and in the Contract Drawings.

B. It is CONTRACTOR's responsibility to check all drawings, data and samples prepared by or for him before submitting them to the ENGINEER for review. Each and every copy of the Drawings and data shall bear CONTRACTOR's stamp showing that they have been so checked. All submittals shall be 8½ inches by 11 inches in size (larger sheets shall be folded to 8½ inches by 11 inches and inserted into pre 3-hole punched plastic holder) and 3-hole punched for insertion into three ring binders. ALL SUBMITTALS shall be numbered sequentially.

C. The CONTRACTOR shall submit to the ENGINEER all drawings and schedules sufficiently in advance of construction requirements to provide no less than ten (10) calendar days for checking and appropriate action from the time the ENGINEER receives them. The CONTRACTOR shall not begin any of the work covered by the submittal until a revision or correction thereof has been reviewed and returned to him, by the ENGINEER, with no exceptions taken.

D. The CONTRACTOR shall submit five (5) copies of the submittal for the ENGINEER plus the number of copies which the CONTRACTOR requires. The ENGINEER will retain four (4) sets.

E. The CONTRACTOR shall be responsible for and bear all cost of damages which may result from the ordering of any material or from proceeding with any part of work prior to the completion of the review by ENGINEER of the necessary Shop Drawings.

F. The CONTRACTOR shall submit drawings for the geomembrane.

Refer to Sections of these Specifications for additional requirements.

2.02 SUBSTITUTIONS

A. The OWNER and ENGINEER will consider formal requests from the CONTRACTOR for substitutions of products in place of those specified (unless otherwise noted in specification).

B. Submit five copies of request for substitution. Include in request:

1. Complete data substantiating compliance of proposed substitution with Contract Documents.

2. For products:
   a. Product identification, including manufacturer's name and address.
   b. Manufacturer's literature:
      1) Product description
      2) Performance and test data
      3) Reference standards
   c. Samples.
   d. Name and address of similar projects on which product was used, and date of installation.

3. For construction methods:
   a. Detailed description of proposed method.
   b. Drawings illustrating methods.

4. Itemized comparison of proposed substitution with product or method specified.

5. Data relating to changes in construction schedule.

6. Relation to separate contracts.

7. Accurate cost data on proposed substitution in comparison with product or method specified.

PART 3 - EXECUTION

3.01 COORDINATION AND SCHEDULING

A. Prior to commencement of the Work, a complete construction schedule shall be established by the CONTRACTOR. The schedule shall show the proposed program of operations. This construction program shall provide for orderly performance of the Work in accordance with the specific requirements stated in these specifications.

B. OWNER will occupy premises and continue normal business operations throughout the construction period. CONTRACTOR shall be responsible for coordinating with own-site OWNER'S personnel to schedule Work in stages as necessary to ensure proper execution of the Work with minimal disruption to existing traffic patterns and business activity.

C. The ENGINEER and OWNER shall be given 48 hours prior notice whenever they must be present to observe equipment testing, partial completion, etc.

D. The CONTRACTOR shall not work Sundays.

E. The lines of communication are: CONTRACTOR to ENGINEER to OWNER and shall be strictly adhered to.

F. The installation of the rails atop the wall will be done after the facility is completed to the extent rolloffs can be positioned. At that time, the exact height of the top rail may vary from the drawings.

3.02 PROJECT MEETINGS

A. The ENGINEER or OWNER shall schedule and administer pre-construction meetings, periodic progress meetings, and specially called meetings throughout the progress of the work:

1. Prepare agenda for meetings.

2. Make physical arrangements for meetings.

3. Preside at meetings.

4. Record the minutes; include significant proceedings and decisions.

5. Reproduce and distribute copies of minutes within five working days after each meetings:
   a. To participants in the meeting.
   b. To parties affected by decisions made at the meeting.

B. Representatives of contractors, subcontractors and suppliers attending meetings shall be qualified and authorized to act on behalf of the entity each represents.

C. The CONTRACTOR shall attend meetings to ascertain that work is expedited consistent with Contract Documents and construction schedules.

3.03 PROPERTY USE AND DAMAGE

A. CONTRACTOR's operations on the OWNER's premises, including the storage of materials, shall be confined to areas authorized by the OWNER.

B. The CONTRACTOR's personnel shall abide by the OWNER's regulations concerning entry into and exit from the project.

C. The CONTRACTOR shall be responsible for all damages to adjoining private or public property resulting from CONTRACTOR's operations, and shall hold OWNER and ENGINEER free from all claims or suits due to any such damage.

D. The CONTRACTOR shall be responsible for all damages to facilities of the OWNER due to negligence or carelessness on the part of the CONTRACTOR. The OWNER will deduct any costs incurred due to such damages from payments to the CONTRACTOR. The OWNER and ENGINEER shall not be liable for loss or damage of CONTRACTOR's tools, equipment or materials due to theft, pilferage, vandalism or any other cause whatsoever.

E. The CONTRACTOR shall not be allowed entry to the site for storing materials or equipment or to begin construction without authorization from the OWNER or ENGINEER.

3.04 PROTECTION

A. Temporary Barriers: Provide, properly locate, and maintain adequate barriers and warning signs for work areas which will be closed to traffic during performance of the Work.

B. Property: Provide adequate protection to building areas, pavement areas not included in the Work, and all other property not directly involved in the performance of the Work. Repair or replace damaged property to the satisfaction of the OWNER.

C. Open Excavation and Work Areas

1. Provide, properly locate and maintain adequate barriers or covers for open pits, tank excavations and pipe trenches during the performance of the Work.

2. Provide shoring and bracing of excavations as necessary for safety of personnel and protection of Work in compliance with requirements of governmental agencies having jurisdiction. Neither the OWNER nor the ENGINEER shall be held liable for any damages or injury resulting from accidental failure of temporary shoring and bracing.

D. Utilities

Fresh water and electricity are available at the site. Should either of these two utilities be required, the CONTRACTOR will be required to make the necessary arrangements with the OWNER.

1. Perform Work with caution in areas known or suspected of containing buried utilities so that they are not damaged. There are number pipes, cables, etc., on this site. The OWNER will provide locations to the extent the data are available. It shall be the CONTRACTOR's sole responsibility to field locate potential conflicts prior to excavating.

2. Repair or replace damaged utilities to a condition equivalent to that before damage occurred, at no additional cost to OWNER.

3.05 CLEANING

A. Progress Cleaning

1. Do not allow accumulation of scrap, debris, waste material, and other items not required for construction of the Work.

2. Daily, and more often if necessary, inspect the site and pick up all scrap, debris and waste material. Remove such items to a place designated by the OWNER for their storage.

3. Provide adequate storage for all items awaiting removal from the job site, observing requirements for fire protection and protection of the ecology.

4. At least weekly, and more often if necessary, completely remove all scrap, debris and waste material from the job site.

B. Final Cleaning

1. "Clean" for the purpose of this Article, and except as may be specifically provided otherwise, shall be interpreted as meaning the level of cleanliness generally provided by skilled cleaners using commercial quality pavement maintenance equipment and materials.

2. Prior to completion of the Work, remove from the job site all tools, surplus materials, equipment, scrap, debris and waste.

3. Unless otherwise specifically directed by the OWNER, broom clean paved areas on the site and public paved areas adjacent to the site. Completely remove resultant debris.

4. Final cleaning shall be scheduled with OWNER's representative.

3.06 PROJECT SIGN

The location and configuration of the project sign will be decided at the pre-construction meeting.

3.07 PERMITTING

The OWNER is responsible for obtaining any permits from Florida Department of Environmental Protection. The CONTRACTOR shall obtain all other permits for constructing the facilities.

3.08 CONSTRUCTION STAKING

It shall be the CONTRACTOR's sole responsibility for all construction staking associated with the work, including right-of-way line. The ENGINEER and OWNER will provide available data to the CONTRACTOR to facilitate said construction staking.

SECTION 02010

TEMPORARY EROSION AND SEDIMENT CONTROL

PART 1 - GENERAL

1.1 SCOPE

A. The work specified in this Section consists of designing, providing, maintaining, and removing temporary erosion and sedimentation controls as necessary.

B. Temporary erosion controls include, but are not limited to: grassing, mulching, netting, watering, reseeding on-site surfaces, reseeding spoil and borrow area surfaces, and providing interceptor ditches at ends of berms and at those locations which will ensure that erosion during construction will be either eliminated or maintained within acceptable limits as established by the County or other regulatory agencies having jurisdiction.

C. Temporary sedimentation controls include, but are not limited to: silt dams, traps and appurtenances at the foot of sloped surfaces which will ensure that sedimentation pollution will be either eliminated or maintained within acceptable limits as established by the County or other regulatory agencies having jurisdiction.

D. CONTRACTOR is responsible for providing effective temporary erosion and sediment control measures during construction or until final controls become effective.

E. The work specified in this Section shall be in compliance with Section 104 of the FDOT "Standard Specifications for Road and Bridge Construction". Section 104 will govern if any conflict arises between the contents of this specification and the FDOT procedures.

1.02 REFERENCE DOCUMENTS

A. Florida Department of Transportation (FDOT), "Roadway and Traffic Design Standards"

B. FDOT, "Standard Specifications for Road and Bridge Construction".

PART 2 - PRODUCT

2.01 MATERIAL

A. Sod is specified in Section 02485.

B. Seed is specified in Section 02485.

C. Mulch is specified in Section 02485.

D. Fertilizer is specified in Section 02485.

E. Watering is specified in Section 02485.

F. Netting is specified in Section 02485.

G. Sedimentation barriers, silt fences, and turbidity barriers as defined in FDOT drawings 102 & 103 of the "Roadway and Traffic Design Standards" manual, and Section 104 of the FDOT "Specifications for Road and Bridge Construction".

PART 3 - EXECUTION

3.01 EROSION CONTROL

A. CONTRACTOR is to begin restoration to any area directly affected by the construction within 48 hours of testing and approval. Should substantial erosion occur, within 48 hours, the CONTRACTOR will be responsible for restoring those areas to their natural state before proceeding with construction.

B. Minimum procedures for grassing slopes less than 3:1 shall be in accordance with section 570 of FDOT "Standard Specifications for Road and Bridge Construction" and as listed below:

1. Scarify slopes to a depth of not less than six inches and remove large clods, rocks, stumps, debris, and roots larger than 1/2-inch in diameter.

2. Sow seed within twenty-four (24) hours after the ground is scarified with a mechanical hand seeder.

3. Apply mulch loosely and to a thickness of between 3/4-inch and 1-1/2-inches.

4. Apply netting over mulched areas on sloped surfaces and stake.

5. Roll and water seeded areas in a manner which will enhance sprouting of seeds and growing of grass. Areas which exhibit unsatisfactory growth, in the opinion of the ENGINEER/OWNER, within one month shall be reseeded. Backfill and seed eroded areas.

6. Slopes steeper than 3:1 shall be sodded in accordance with the provisions of Section 575 of the FDOT "Standard Specifications for Road and Bridge Construction".

3.02 SEDIMENTATION CONTROL

A. Silt Fencing:

1. Install and maintain a "Type III" FDOT standard silt fence when shown on Contract Drawings.

2. The silt fence shall be installed between the construction area and the down side of the slope.

B. Turbidity Barrier:

1. Install a FDOT standard "Staked Turbidity Barrier" to protect all storm-water conveyance and storage areas.

2. Where the direction of flow is uncertain, a turbidity barrier will be required on each side.

C. Locate all silt fencing within the designated right of way, easement, or utility corridor, as applicable.

D. Maintain silt fence in good condition until restoration of area is complete and approved by the ENGINEER.

E. It is the CONTRACTOR's responsibility to provide bypassing routes or detours of storm water or streams as necessary to prevent flooding damage or obstruction to adjacent lands due to construction or sedimentation control.

F. Install and maintain silt dams, traps and appurtenances, as needed, as shown on the Contract drawings and as approved by the ENGINEER.

3.03 PERFORMANCE

A. The CONTRACTOR must undertake all efforts to prevent any erosion or turbid water from being discharged off site, into wetlands, and/or into waters of the state.

B. Should any of the temporary erosion and sediment control measures employed by the CONTRACTOR fail to produce results which comply with the requirements of the State of Florida and local government agency, the CONTRACTOR shall immediately take whatever steps are necessary to correct the deficiency at his own expense.

SECTION 02280

GEOMEMBRANE

PART 1 - GENERAL

1.01 SCOPE

A. Included in this section of these specifications are the requirements for furnishing all labor, materials, equipment and incidentals, and complete installation and ready for use of the High Density Polyethylene (HDPE) geomembrane for the impoundment as shown on the Drawings and as specified herein.

1.02 EXPERIENCE

A. Manufacturer - The manufacturer of the lining material described hereunder shall have previously demonstrated his ability to produce this membrane by having successfully manufactured a minimum of one hundred million square feet of similar liner material for hydraulic lining installations. The manufacturer must be listed by the NSF (National Sanitation Foundation) Standard 54.

B. Installer - The Installer shall demonstrate previous experience in similar liner installations. The Installer shall have installed at least fifty million square feet of liner, and shall meet the requirements outlined in subsequent sections of these specifications.

PART 2 - PRODUCTS

2.01 LINING MATERIAL

A. The new geomembrane shall be comprised of HDPE material manufactured of VIRGIN, first-quality products designed and manufactured specifically for the purpose of liquid containment in hydraulic structures. The surface of the geomembrane shall be white or light green.

B. The liner material shall be so produced as to be free of holes, surface blemishes, scratches, blisters, undispersed raw materials, or any sign of contamination by foreign matter (e.g., nonuniform color, streaking, roughness, carbon black agglomerates, visually discernible regrind, etc.).

C. The lining material shall be manufactured to minimum of 15 feet seamless widths. There shall be no factory seams.

D. The manufacturer shall provide quality control certificates for each batch of resin and each shift's production of geomembrane. These quality control certificates shall be signed by responsible parties employed by the manufacturer, such as the production manager, shall be notarized, and supplied to the ENGINEER. Provide these certificates 24 hours prior to starting installation. No Geomembrane can be installed until the Quality Control Certificates have been provided to the ENGINEER. The quality control certificate shall include:

1. Roll numbers and identification.

2. Sampling procedures and results of quality control tests: as a minimum, the tests indicated in Table 1 (located at the end of this section) conducted with the methods indicated in the specifications or equivalent methods.

3. Statement that the geomembrane:

   - Meets the specification values listed in Table 1.

   - The geomembrane formulation consist of at least 97% of polyethylene resin and no fillers, extenders, previously used materials have been mixed into the formulation.

   - Reclaimed material that has seen previous service life and is recycled has not been allowed in the formulation.

   - The carbon black used in the geomembrane is a Group 3 category or lower.

   - In the event that carbon black is mixed into the formulation in the form at a concentrate rather than a powder, the carrier resin of the concentrate is the same generic type as the base polyethylene resin.

   - The maximum amount of additives in a particular formulation does not exceed 1.0% by weight.

2.04 SHIPMENT, HANDLING AND SITE STORAGE

A. The manufacturer shall identify all rolls with the manufacturer's name, product identification, thickness, roller number, roll dimensions and date manufactured.

B. Unloading of rolls at the job site's temporary storage location shall be such that no damage to the geomembrane occurs. Pushing, sliding or dragging of rolls of geomembranes shall not be permitted. The core shall be stable enough to support the roll without buckling or otherwise failing during handling, storage and transportation. Coordinate with the OWNER as to storage location prior to off loading rolls.

C. Offloading at the job site shall be performed with cranes or fork lifts in a workmanlike manner such that damage does not occur to any part of the geomembrane.

D. Temporary storage at the job site shall be in an area where standing water cannot accumulate at any time.

E. The ground surface shall be suitably prepared such that no stones or other rough objects which could damage the geomembranes are present.

F. Temporary storage of rolls of geomembranes in the field shall not be so high that crushing of the core or flattening of the rolls occur. This limit is typically five rolls high.

G. Suitable means of securing the rolls shall be used such that shifting, abrasion or other adverse movement does not occur.

H. If storage of rolls of geomembranes at the job site is longer than six months, a sacrificial covering or temporary shelter shall be provided for protection against precipitation, ultraviolet exposure and accidental damage.

2.05 ACCEPTANCE AND CONFORMANCE TESTING

A. Upon delivery of the rolls of geomembrane to the project site, and temporary storage thereof, samples of the geomembrane shall be provided to the ENGINEER. A sample shall be taken by removing the protective wrapping and cutting full width, a three-foot long sample off of the outer wrap of the selected roll(s). The samples shall be relabeled for identification. The roll shall also be relabeled for identification, if necessary.

1. The samples shall be identified by type, style or, lot and roll numbers. The machine direction shall be noted on the sample(s) with a waterproof marker.

2. A lot is defined as a unit of production, or a group of other units or packages having one or more common properties and being readily separable from other similar units.

3. Unless otherwise required by the ENGINEER, sampling shall be based on one per lot. Note that a lot is defined as 10,000 m^2 (100,000 ft^2) of geomembrane.

4. The geomembrane rolls which are sampled should be immediately rewrapped in their protective covering to the satisfaction of the ENGINEER.

B. Testing

1. The OWNER will be responsible for procuring the testing firm to complete the tests.

2. The samples will be tested for conformance with specifications as identified in Table 1.

3. Conformance test results will be reviewed by the ENGINEER prior to deployment of any geomembrane from the lot under review.

4. The ENGINEER will review the results and will report any non-conformance to the OWNER.

5. The resolution of failing conformance tests shall be based upon ASTM 4759.

PART 3 - EXECUTION

3.01 GROUND SURFACE PREPARATION

A. The surface of the area where geomembrane is to be placed shall be completely cleared of all timber, brush, stumps, roots, rubbish and all other objectionable obstructions resting on or protruding through the surface of the ground. Clearing operations shall be conducted so as to prevent damage to existing structures and installations (monitoring wells), and to those under construction, so as to provide for the safety of employees and others.

B. No standing water or excessive moisture shall be allowed. The ENGINEER will observe the ground surface with the installation CONTRACTOR. The installation CONTRACTOR shall certify in writing that the surface on which the membrane is to be installed is acceptable before commencing work.

3.02 PLACEMENT

A. Construction equipment deploying the rolls or pallets shall not deform or rut the soil subgrade. Tire or track deformations beneath the geomembrane greater than 25 mm (1.0 in.) in depth shall be repaired prior to placement of the geomembrance.

B. Care, and planning, should be taken to unroll the geomembrane close to its intended, and final, position.

C. Geomembranes, when unrolled, shall not stick together to the extent where tearing, or visually observed straining of the geomembrane occurs. The upper temperature limit is very specific to the particular type of geomembrane. A sheet temperature of 50°C (122°F) is the upper limit that a geomembrane shall be unrolled unless it is shown otherwise to the satisfaction of the ENGINEER. .

D. Geomembranes which have torn or have been excessively deformed shall be rejected or repaired to the satisfaction of the ENGINEER.

E. Sufficient slack shall be placed in the geomembrane to compensate for the coldest temperatures envisioned so that no tensile stresses are generated in the geomembrane or in its seams either during installation or subsequently after the geomembrane is covered.

F. The geomembrane shall have adequate slack such that it does not lift up off of the subbase or substrate material at any location within the facility, i.e., no "trampolining" of the geomembrane shall be allowed to occur at any time.

G. The geomembrane shall not have excessive slack to the point where creases fold over upon themselves, during placement and seaming, or when tires or soil is placed on the geomembrane.

H. Spotting of deployed geomembranes shall be done with no disturbance to the soil subgrade or geosynthetic materials upon which they are based.

I. Spotting shall be done with a minimum amount of dragging of the geomembrane on soil subgrades.

J. Temporary tack welding (usually with a hand held hot air gun) of all types of thermoplastic geomembranes will be allowed at the installers discretion.

K. When temporary tack welds of geomembranes are utilized, the welds shall not interfere with the primary seaming method, or with the ability to perform subsequent destructive seam tests.

3.03 FIELD SEAMING PROCEDURES

A. CONTRACTOR Experience - The installation of the HDPE must be done by the manufacturer or authorized representative "installer" using the manufacturer's extrusion or hot double wedge welding equipment and installation methods. All supervisors overseeing the liner installation must have ten million square feet of supervisory liner experience. All field technicians must have over one million square feet of

seaming experience. Provide documentation addressed to the OWNER, with a copy to the ENGINEER demonstrating conformance. No geomembrane shall be installed until these documents have been provided and the ENGINEER has reviewed them.

B. The Installer shall produce layout drawings of the proposed placement pattern and seams prior to geomembrane placement. The drawings shall indicate the panel configuration and location of seams. The layout drawings must be approved by the ENGINEER and OWNER, prior to the installation of any geomembrane. The layout shall be suitable for use as construction drawings and shall include dimensions, details, etc. Three "black line" drawings (one copy on mylar reproducible and a disk in AUTOCAD format) will be provided to the ENGINEER. The installer shall use these drawings as a base for providing record drawings at the completion of the project.

C. Panel Identification - Each roll shall be redesignated with a panel number ("identification code") which is consistent with the layout plan. A panel is the unit area of in-place geomembrane which is to be seamed in the field (i.e., one roll may be cut into several panels). The geomembrane shall be positioned on the site as shown in the layout drawings. Instructions on the boxes or wrapping containing the geomembrane materials shall be followed to assure the panels are unrolled in the proper direction for seaming.

D. Panel Placement - Individual panels of liner materials shall be laid out and overlapped by a maximum of four inches (101 millimeters) for extrusion welding or five inches (127 millimeters) for hot wedge welding. Extreme care shall be taken by the installer in the preparation of the areas to welded. The area to be welded shall be cleaned and prepared according to the procedures laid down by the material manufacturer. All sheeting shall be welded together using the double hot wedge welding system or by means of integration of the extrudate bead with the lining material in places where double wedge is not possible. The composition of the extrudate in the extrusion welding process shall be identical to the lining material.

E. Weather Conditions - Geomembrane placement shall not proceed at an ambient temperature below 5°C (40°F). Geomembrane placement shall not be done during any precipitation, in the presence of excessive moisture (e.g., fog, dew), in an area of ponded water, or in the presence of excessive winds.

F. Temperature Control - The welding equipment used shall be capable of continuously monitoring and controlling the temperatures in the zone of contact where the machine is actually fusing the lining material so as to ensure that changes in environmental conditions will not affect the integrity of the weld.

G. Fish Mouths - No "fish mouths" shall be allowed within the seam area. Where "fish mouths" occur, the material shall be cut, overlapped, and an overlap extrusion weld shall be applied.

3.04 ON-SITE FIELD SEAM TESTING

A. The installer shall employ on-site physical non-destructive testing on welds at sample locations designated by the ENGINEER.

B. The ENGINEER shall inspect each seam. Any area showing a defect shall be marked and repaired in accordance with HDPE repair procedures (refer to Section 3.06).

C. A test weld three (3) feet [one (1) meter] long from each welding machine shall be run at least at the beginning of each day, and after the noon break, prior to liner welding and under the same conditions as exist for the liner welding. No welder may start work until the sample weld has been approved by the ENGINEER. The test weld shall be marked with date, ambient temperature, and welding machine number.

Samples of weld 1" wide shall be cut from the test weld and tested using a tensiometer. The weld should not peel. Seams should exhibit a film tear bond (a pass result occurs when the sheeting yields. A fail result occurs when the weld peels). The weld sample shall be kept for subsequent testing on laboratory tensiometer equipment in accordance with the applicable ASTM standards (refer to Table 2). In addition, the ENGINEER shall have the option of requesting test strips of any field seaming crew or device at any time.

D. The fabrication of field test strips and the testing of the test specimens shall be observed by the ENGINEER. Field test strips may be discarded after the destructive test specimens are removed and tested.

E. Non-destructive Seam Continuity Testing: The installer shall non-destructively test all field seams over their full length using a vacuum test unit (extrusion process) or air pressure (hot double wedge process). Continuity testing shall be done as the seaming work progresses, not at the completion of all field seaming.

F. The following procedures shall apply to locations where seams cannot be non-destructively tested, as determined by the ENGINEER.

1. All such seams shall be cap-stripped with the same geomembrane.

2. If the seam cannot be tested prior to final installation, the seaming and cap-stripping operations shall be observed by the ENGINEER for uniformity and completeness.

G. Test Condition - The following test conditions shall be followed for each test listed below:

1. Air Pressure Test - pressure held 30 psig for 5 minutes with maximum loss of 2 psig.

2. Vacuum Box Test - Hold vacuum in box of at least 3 psi for 15 seconds for each section of seam. (Visual inspection of seam for air bubbles during vacuum box testing is required)

3. The ENGINEER shall observe all nondestructive testing procedures. The location, data, test number, name of test person and outcome of tests shall be recorded. The OWNER shall be informed of any deficiencies.

4. If the pressure, air pressure or vacuum box, fluctuates, it indicates that there is a leak and it must be located.

3.05 LABORATORY TESTS OF FIELD SEAMS

A. Location of Samples - Destructive shear and peel tests shall be done at the option of the owner or engineer if a suspicious feature, change in sheet temperature burnout, etc. is observed.

1. ENGINEER shall observe all production seam sample cutting.

2. All samples shall be adequately numbered and marked with permanent identification.

3. All sample locations shall be indicated on the geomembrane layout (and record) drawings.

4. The reason for taking the sample shall be indicated, e.g., statistical routine, suspicious feature, change in sheet temperature, etc.

5. The following ASTM test methods shall be used.

Geomembrane	Seam Shear Test	Seam Peel Test	Sheer Test
HDPE	D-4437	D-4437	D-638

6. The ENGINEER shall witness all sampling, and will observe that proper identification and details accompany the test results. Details, as follows, are required.

   a. Date and time.

   b. Ambient temperature.

   c. Identification of seaming unit, group or machine.

   d. Name of master seamer.

   e. Welding apparatus temperature and pressure

   f. Pass or fail description.

   g. A copy of the report shall be attached to the remaining portion of the sample.

7. The ENGINEER will verify that samples sent to the testing laboratory are properly marked, packaged and shipped so as not to cause damage.

8. Results of the laboratory tests shall come to the ENGINEER in a stipulated time agreed upon by the Project Manager. For extrusion and thermally bonded seams, verbal test results are required within 24 to 72 hours after the laboratory receives the samples. The ENGINEER will inform the OWNER of the results and make appropriate recommendations.

9. Each repair of a patched seam where a test sample had been removed shall be verified. This shall be done by a nondestructive test. If, however, the sampling strategy selected calls for a destructive test to be made at the exact location of a patch, it shall be accommodated. Thus, the final situation will require a patch to be placed on an earlier patch.

B. Size of Samples - The samples shall be 0.4 m (15 in.) wide by 1.1 m (44 in.) long with the seam centered lengthwise. One 20 mm (1 in.) wide strip shall be cut from each end of the sample and these shall be tested by the Installer in the field, by tensiometer, for peel and shear, respectively, and shall not fail in the seam. The remaining sample shall be cut into three parts and distributed as follows:

   1. One portion to the Installer for laboratory testing (15" x 15").

   2. One portion for independent laboratory testing (15" x 15").

   3. One portion to the OWNER for archive storage (15" x 12").

C. Installer's Laboratory Testing - All test results from the Installer's laboratory shall be submitted to the OWNER as soon as they become available. Test method details are given in Table 2 (located at the end of this section).

D. Independent Laboratory - An independent laboratory employed by the OWNER will test each sample. Test method details are given in Table 2 (located at the end of this section).

E. Procedures for Destructive Test Failure - The following procedures shall apply whenever a sample fails the field destructive test. The Installer shall have two options:

1. The Installer shall reconstruct the seam between the failed location and the last passed location.

2. The Installer shall retrace the welding path to an intermediate location (at least ten feet) and take a small sample for an additional field test. If this additional sample passes, then the seam shall be reconstructed from that point onward **to the last passed location**. If this sample fails, then the process shall be repeated except that a full laboratory sample shall be taken and the sample must pass the laboratory tests.

3. The resulting seams will be tested using non destructive methods.

F. In any case, all acceptable seams shall be bounded by two fully passed test locations (see Table 2), and one test shall be taken within the reconstructed area.

G. All holes in the geomembrane resulting from destructive seam sampling shall be immediately repaired in accordance with repair procedures described in this Specification (3.06). The continuity of the new seams in the repaired area shall be tested according to the procedures in these specifications (3.04).

3.06 DEFECTS AND REPAIRS

A. Identification - The geomembrane surface shall be broomed or washed by the Installer if the amount of dust or mud inhibits inspections.

B. Evaluation - Each suspect location in seam and non-seam areas shall be non-destructively tested. Each location which fails the non-destructive testing shall be repaired by the Installer, at no additional cost to the OWNER.

C. Repair Procedures:

1. Defective seams shall be repaired by reconstruction.

2. Tears or pinholes shall be repaired by welding patches as described below.

3. Blisters, larger holes, undispersed raw materials, and contamination by foreign matter shall be repaired by patches.

4. Surfaces of HDPE which are to be patched shall be abraded no more than one hour prior to the repair.

5. All seams used in repairing patches must be approved extrusion welded seams; and shall be subjected to the same destructive or non-destructive test procedures outlined for other seams.

D. Patches shall be round or oval in shape, made of the same geomembrane, and extend a minimum of 150 mm (6 in.) beyond the edge of defects.

E. Patches shall be applied using approved welding methods described above.

F. Seam Reconstruction Procedures - Seam reconstruction for the extrusion welding process shall be achieved by grinding the existing seam and rewelding a new seam.

G. Seam reconstruction for the hot double wedge process shall be achieved by cutting out the existing seam, welding in a replacement strip and cap stripping the new seam.

H. Verification of Repairs - Each repair shall be non-destructively tested using the methods described in a previous Section, as appropriate. Repairs which pass the non-destructive test shall be taken as an indication of an adequate repair. Failed tests shall indicate that the repair shall be redone and retested until a passing test results.

3.07 BACKFILL

A. Backfilling of Anchor Trench - The anchor trench, if any, shall be backfilled with clean fill free of any materials that could damage the liner and compacted by the Installer. Care shall be taken when backfilling the trenches to prevent any damage to the geomembrane.

B. The ENGINEER shall be available at all times during backfilling of the anchor trenches.

3.08 PROTECTION FROM WIND DAMAGE

A. The CONTRACTOR shall place tires on the liner at a 50-foot grid connected with 3/8 inch black nylon rope as the installation proceeds.

1. Geomembrane rolls or panels which have been displaced by wind shall be inspected and approved by the ENGINEER before any further field operations commence.

2. Geomembrane rolls or panels which have been damaged (torn, punctured, or deformed excessively and permanently) shall be rejected and/or repaired as approved by the ENGINEER.

3. Permanent crease marks, or severely folded (crimped) locations, in geomembranes shall not be permitted unless it can be shown that such distortions have no adverse effect on the properties of the geomembrane. If this cannot be done, these areas shall be cut out and properly patched as per paragraph 3.06 of this section and approved by the ENGINEER.

4. If patching of wind damaged geomembranes becomes excessive, the entire roll or panel shall be rejected.

3.10 ACCEPTANCE

A. The Installer shall retain all ownership and responsibility for the geomembrane until acceptance by the OWNER. This geomembrane liner will be accepted by the OWNER when:

1. Written certification letter sealed by the OWNER's registered professional ENGINEER has been received by the OWNER.

2. The installation is finished.

3. All documentation of installation is completed.

4. Verification of the adequacy of all field seams and repairs, including associated testing, is complete.

3.11 WARRANTY

A. The CONTRACTOR shall warranty the liner installation for two years and the material to be free of defects for a period of 20 years. The warranty must include a guarantee that the geomembrane will not fail due to UV degradation for not less than 5 years.

TABLE 1. HDPE LINER PROPERTIES - SMOOTH SHEET

TYPICAL PROPERTIES	TEST METHOD	VALUE	TESTING FREQUENCY
*Gauge Thickness, mils min. ±10%	ASTM D-5199	20 mil nominal 18 mil minimum	once/sht.
Density g/cc. (Min)	ASTM D-792	.94 minimum	once/batch
Melt Flow Index g/10 min.	ASTM D-1238 Condition E (190°C, 2.16kg.)	1.0 maximum 0.1 minimum	once/batch
*Tensile Properties 1. Tensile Strength at Break (Pounds/inch width) 2. Tensile Strength at Yield (Pounds/inch width) 3. Elongation at Break (%) 4. Elongation at Yield (%)	ASTM D-638 Type IV Dumb-bell at 2 ipm.	80 minimum 46 minimum 750 maximum 13 maximum	1/50,000 ft^2 1/50,000 ft^2 1/50,000 ft^2 1/50,000 ft^2
*Puncture Resistance Pounds.	FTMS 101 Method 2065	30 minimum	1/50,000 ft^2
*Tear Resistance Initiation lbs.	ASTM D-1004 Die C	14 minimum	1/50,000 ft^2
Low Temperature Brittleness °F	ASTM D-746 Procedure B	-70 minimum	1/50,000 ft^2
Dimensional Stability. % Change Each Direction	ASTM D-1204 212°F 1 hr.	±2 maximum	1/50,000 ft^2
Environmental Stress Crack. Hours.	ASTM D-1693	200 minimum	1/50,000 ft^2
Carbon Black	ASTM D-1603	2% minimum 3% maximum	once/sht1

*Properties tested for conformance prior to installation, Section 2.05.

TABLE 2. TEST METHOD DETAILS FOR GEOMEMBRANE SEAMS IN SHEAR AND IN PEEL

TYPE OF TEST	HDPE	VALUE
Shear Test on Seams		
ASTM Test Method	D-4437	
Specimen Shape	Strip	
Specimen Width (in.)	1.00	
Specimen Length (in.)	6.00 + seam	
Gage Length (in.)	4.00 + seam	
Strain Rate (ipm)	2.0	
Strength (psi) or (ppi)	Force/(1.00xt)	44 lbs. in width
Peel Test on Seams		
ASTM Test Method	D-4437	
Specimen Shape	Strip	
Specimen Width (in.)	1.00	
Specimen Length (in.)	4.00	
Gage Length (in.)	n/a	
Strain Rate (ipm)	2.0	
Strength (psi) or (ppi)	Force/(1.00xt)	Film Tear Bond
Tensile Test on Sheet		
ASTM Test Method	D-638	
Specimen Shape	Dumbbell	
Specimen Width (in.)	0.25	
Specimen Length (in.)	4.50	See Table 1
Gage Length (in.)	1.30	
Strain Rate (ipm)	2.0	
Strength (psi) or (lb)	Force/(0.25xt)	
Strain (in./in.)	Elong./1.30	
Modulus (psi)	From Graph	

where n/a = not applicable
t = geomembrane thickness
psi = pounds/square inch of specimen cross section
ppi = pounds/linear inch width of specimen
ipm = inches/minute
Force = maximum force attained at specimen failure (yield or break)

QUALITY ASSURANCE CHECKLISTS AND FORMS

CONSTRUCTION DAILY LOG

Project:
Contract Number:
LAW Project Number:

Date: _____ By: _____

Describe Weather Conditions:

Temperature a.m.: _____

Temperature p.m.: _____

Precipitation:

amount: _____

time: _____

CONTRACTOR start work time: _____

CONTRACTOR end work time: _____

Site Visitors:

Name: _____ Purpose: _____

Name: _____ Purpose: _____

Name: _____ Purpose: _____

Meetings: Attach a copy of the minutes.

Labor:

CONTRACTOR	Type

Equipment:

CONTRACTOR	Type

Materials (other than liner):

Project:: _____
Law Project: _____

Supplier	Type	Quantity

Summarize the work performed today from diary:

_____
_____
_____
_____
_____

TEST WELDS

	Morning	After Lunch
Machine _____		
Field Test Location	_____	_____
Air Temperature	_____	_____
Test Results	Pass/Fail*	Pass/Fail
Field Tensiometer	_____	_____
Machine _____		
Field Test Location	_____	_____
Air Temperature	_____	_____
Test Results	Pass/Fail*	Pass/Fail
Field Tensiometer	_____	_____
Machine _____		
Field Test Location	_____	_____
Air Temperature	_____	_____
Test Results	Pass/Fail*	Pass/Fail
Field Tensiometer	_____	_____

Notes:

* Pass = Failure of seam by film tear vs. Peeling of seam.
** If fail re-test - Add description of additional test data or other action.

SEAM TESTING/NON-DESTRUCTIVE

1. Joining Panel _____ and Panel _____
   Results Pass/Fail

2. Joining Panel _____ and Panel _____
   Results Pass/Fail

3. Joining Panel _____ and Panel _____
   Results Pass/Fail

4. Joining Panel _____ and Panel _____
   Results Pass/Fail

5. Joining Panel _____ and Panel _____
   Results Pass/Fail

Notes:
*Pass - Hold air pressure @ 30 psi for 5 minutes or more for hot wedge, 3 psi for 15 seconds or more for vacuum box test of extrusion weld.

SEAM TESTING/DESTRUCTIVE

Mark location on panel layout drawing in the field
Location (describe)

Seam joining Panel ___ and Panel ____

Seam joining Panel ___ and Panel ____

Seam joining Panel ___ and Panel ____

Seam joining Panel ___ and Panel ____

Seam joining Panel ___ and Panel ____

Patch Locations

Seam joining Panel ____ and Panel ____
Test results _____

Seam joining Panel ____ and Panel ____
Test results _____

Seam joining Panel ____ and Panel ____
Test results _____

Seam joining Panel ____ and Panel ____
Test results _____

SUBGRADE SURFACE ACCEPTANCE

PROJECT: _____ JOB NUMBER: _____

LOCATION: _____ DATE: _____

I, the undersigned duly authorized representative of _____, certify that upon visual inspection of the subgrade described below meets criteria for installation of a _____ mil flexible membrane line. By signing below, however, acknowledges no responsibility for the subgrade design, degree of moisture or compaction, integrity, elevation, or maintenance thereof, in any way.

Approximately size of area: _____

Description of area: _____

_____

_____

_____

_____

_____

_____	_____	_____
Manufacturer's Representative	OWNER/CONTRACTOR	Inspector

PROJECT: _____
LOCATION: _____
DATE: _____

PRE-START SITE INSPECTION
(Site Preparation)

1. INSPECTED BY:

NAME _____ REPRESENTING _____ POSITION _____

_____

_____

_____

_____

2. DESCRIPTION OF INSPECTED AREA

_____

_____

_____

PHOTOS ENCLOSED _ TO FOLLOW _____

3. REMEDIAL WORK REQUIRED:

_____

_____

_____

4. DATE & CONDITIONS OF GUNDLE START-UP:

_____

_____

_____

5. FURTHER INSPECTION REQUIRED: YES _____ NO _____ DATE: _____

_____	_____	_____
Manufacturer's Representative	OWNER/CONTRACTOR	Inspector

GEOMEMBRANE PRE-INSTALLATION DATA SHEET

DO NOT ALLOW CONTRACTOR TO proceed with installation until the following are all completed.

1. Quality Control Certificates

			Date
Signed by Responsible party (Production Manager or _____)	Y	N	_____
Notarized	Y	N	_____
Roll #s and ID	Y	N	_____
Quality Control Test Data (Refer to Table 1 in this section of the Specifications)	Y	N	_____
Sampling Procedures Identified	Y	N	_____
All items under Paragraph 2.D1, E3 of Section 02280 are included.	Y	N	_____

Exceptions: _____

2. Conformance Tests

Identify Rolls for Sampling.
It is done by lot - rule of thumb one test/2.3 acres (≈100,000 ft^2) of geomembrane cover or every change in lot

Rolls Sampled	Y	N	_____
# Rolls Samples			_____
List Tests that are requested on Cover Sheet to Laboratory	Y	N	_____

Exceptions: _____

3. Experience Documentation

• Manufacturers experience	Y	N	_____
• Supervisory experience	Y	N	_____
• Field Technicians	Y	N	_____

4. Panel Layout Drawing	Y	N	_____
Approved by ENGINEER	Y	N	_____
5. Panel Numbers on Rolls	Y	N	_____

SECTION 02485

SODDING AND SEEDING

PART 1 - GENERAL

1.01 SCOPE

A. The CONTRACTOR shall furnish all materials and labor necessary for establishing grass as shown on the drawings. It is the intent of this specification that all disturbed areas, not otherwise protected, be sodded or seeded (with mulching). Sodding shall be used on all slopes 3:1 or steeper and the remaining areas shall be seeded unless otherwise noted in drawings.

1.02 STORAGE OF MATERIALS

A. The CONTRACTOR shall be provide space for storage of sod prior to placement in a manner that will not endanger or restrict pedestrian or vehicular traffic.

PART 2 - PRODUCTS

2.01 SOD

A. Sod shall be in accordance with section 575-1 through 575-2 of the FDOT Specifications. Sod being replaced in existing sodded areas shall be replaced in kind. Sod in new areas shall be Argentina Bahia.

2.02 SEED

A. Seed shall be in accordance with Section 570-1 through 570-3 of the FDOT Specifications and shall be Argentina Bahia.

2.03 MULCH

A. Mulch shall be in accordance with Section 570-1 through 570-3 of the FDOT Specifications.

PART 3 - EXECUTION

3.01 SODDING

A. Sodding shall be in accordance with Section 575-3 of the DOT Specifications.

3.02 SEEDING

A. Seeding shall be in accordance with Section 570-4 through 570-5 of the DOT Specifications.

3.03 MULCHING

A. Mulching shall be in accordance with Section 570-4 of the DOT Specifications.

3.04 MAINTENANCE

A. Sodding and seeding shall be maintained in accordance with Section 570-5 and 575 of the Florida DOT Specifications.

3.05 REPAIRS TO GRASSED AREAS DISTURBED BY CONTRACTOR'S OPERATIONS

A. Grassed areas established under this contract and all grassed areas damaged by the CONTRACTOR's operation shall be repaired at once by proper soil preparation, fertilizing, and resodding or reseeding, in accordance with these Specifications.

PASCO COUNTY BOARD OF COUNTY COMMISSIONERS
PASCO, COUNTY, FLORIDA

CONSTRUCTION DRAWINGS FOR A-1 INTERMEDIATE COVER
WEST PASCO CLASS I LANDFILL

PREPARED BY
LAW ENGINEERING & ENVRONMENTAL SERVICES, INC.

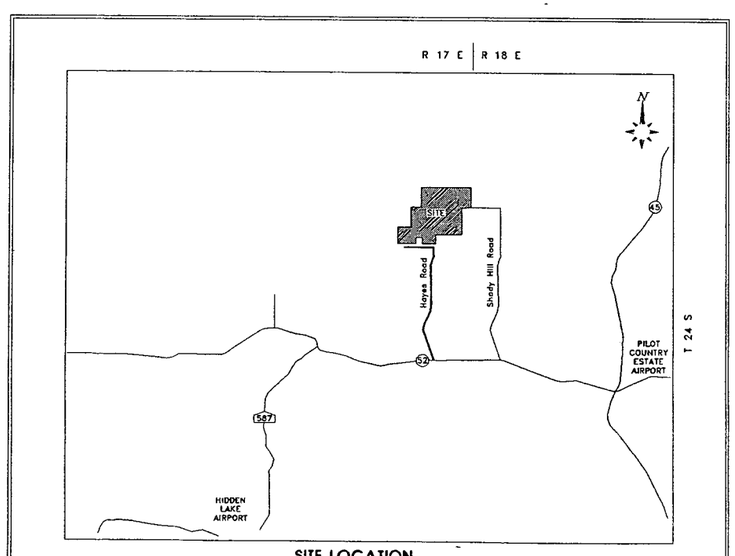

SITE LOCATION
N.T.S.

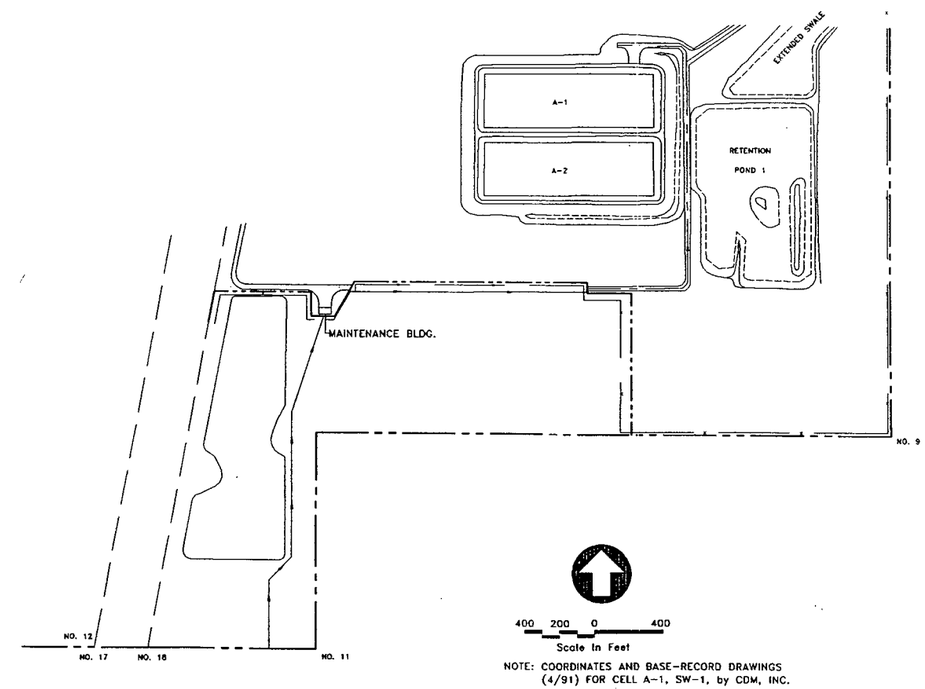

NOTE: COORDINATES AND BASE-RECORD DRAWINGS (4/91) FOR CELL A-1, SW-1, by CDM, INC.

ACAD=4170317

REV	DATE	BY	SUB	APP	DESCRIPTION	REV	DATE	BY	SUB	APP	DESCRIPTION

DESIGNED REM
DRAWN JFW
CHECKED JWS/REM
IN CHARGE REM
DATE 12/97

PASCO COUNTY BOARD OF COUNTY COMMISSIONERS
UTILITY SERVICES BRANCH

SUBMITTED _____

LAW ENGINEERING AND ENVIRONMENTAL SERVICES

APPROVED _____

A-1 INTERMEDIATE COVER
PASCO COUNTY, FLORIDA

COVER PAGE, LOCATION MAP, & SITE PLAN

SCALE AS NOTED
CONTRACT 40141-7-0317
DWG NO 1 | REV | PAGE NO.

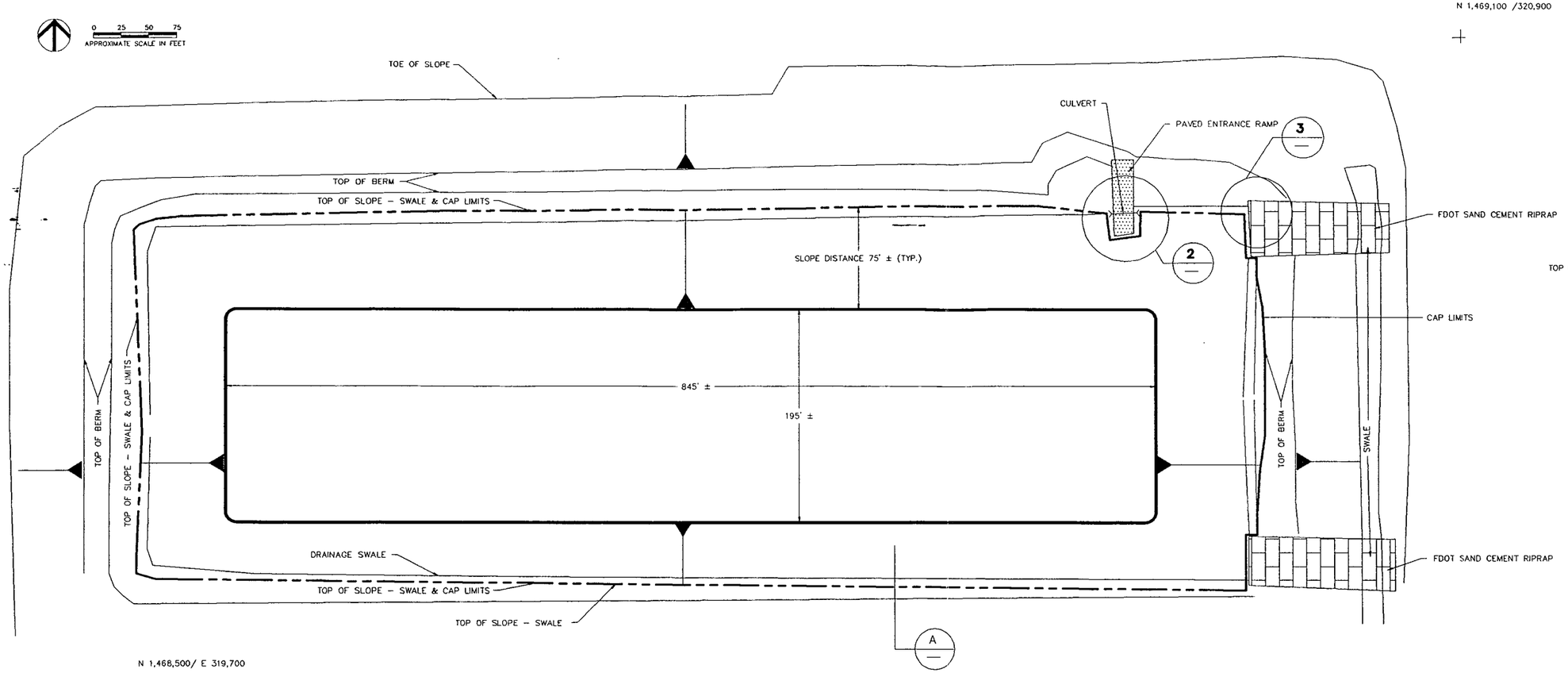

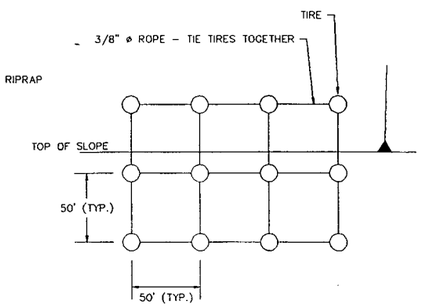

1 TYPICAL TIRE COVER DETAIL
NOT TO SCALE

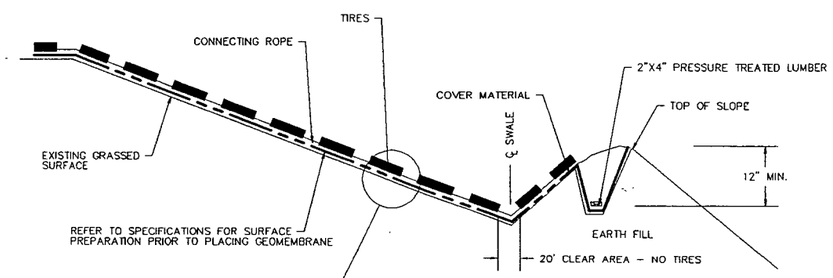

4 A TYPICAL SECTION
NOT TO SCALE

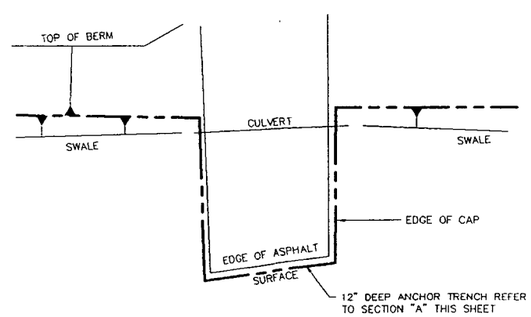

2 DETAIL AT ENTRANCE
NOT TO SCALE

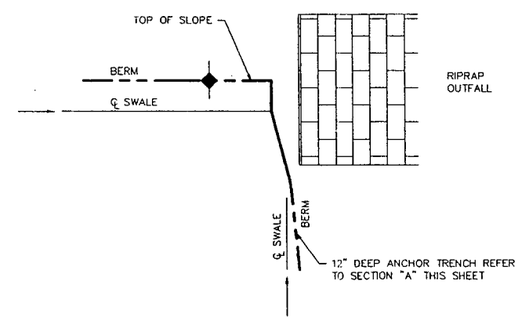

3 DETAIL AT RIPRAP OUTFALL
NOT TO SCALE

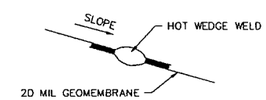

4 TYPICAL SEAM
NOT TO SCALE

ACAD=4170317

REV	DATE	BY	SUB	APP	DESCRIPTION	REV	DATE	BY	SUB	APP	DESCRIPTION

DESIGNED REM
DRAWN JFW
CHECKED JWS/REM
IN CHARGE REM
DATE 12/97

PASCO COUNTY BOARD OF COUNTY COMMISSIONERS
UTILITY SERVICES BRANCH

LAW ENGINEERING AND ENVIRONMENTAL SERVICES

SUBMITTED _____ APPROVED _____

A-1 INTERMEDIATE COVER
PASCO COUNTY, FLORIDA

SITE PLAN

SCALE AS NOTED
CONTRACT 40141-7-0317
DWG NO 2 REV PAGE NO.

File:

Pasco WTE File.

Bob

STATE OF FLORIDA
DEPARTMENT OF ENVIRONMENTAL PROTECTION

DISTRICT ROUTING SLIP

To: BOB BUTERA DATE: 1/30/96

CC To:

	PENSACOLA	**NORTHWEST DISTRICT**	
	Panama City	Northwest District Branch Office	
	Tallahassee	Northwest District Branch Office	
	Sopchoppy	Northwest District Satellite Office	
X	**TAMPA**	**SOUTHWEST DISTRICT**	
	Punta Gorda	Southwest District Branch Office	
	Bartow	Southwest District Satellite Office	
	ORLANDO	**CENTRAL DISTRICT**	
	Melbourne	Central District Satellite Office	
	JACKSONVILLE	**NORTHEAST DISTRICT**	
	Gainesville	Northeast District Branch Office	
	FORT MYERS	**SOUTH DISTRICT**	
	Marathon	South District Branch Office	
	WEST PALM BEACH	**SOUTHEAST DISTRICT**	
	Port St. Lucie	Southeast District Branch Office	

DEP
JAN 29 1996
SOUTHWEST DISTRICT
TAMPA

☐ Reply Optional Date Due _____ ☐ Reply Required Date Due: _____ ☒ Info Only

Comments:
This is an application for resource recovery equipment sales tax exemption that we are reviewing.

From: Jan Rae Clark Tel.: 1-9967

08-18-93

STATE OF FLORIDA
DEPARTMENT OF ENVIRONMENTAL PROTECTION
TWIN TOWERS OFFICE BUILDING
2600 BLAIR STONE ROAD
TALLAHASSEE, FLORIDA 32399-2400

MS4565

BOB BUTERA
TAMPA
SW DISTRICT

Department of
Environmental Protection

Lawton Chiles
Governor

Twin Towers Office Building
2600 Blair Stone Road
Tallahassee, Florida 32399-2400

Virginia B. Wetherell
Secretary

January 30, 1996

D.E.P.
JAN 31 1996
TAMPA

Mr. William R. Crellin
Ogden Martin Systems of Pasco, Inc.
14230 Hayes Road,
Spring Hill, Florida 34610

Dear Mr. Crellin:

On November 1, 1995, we received your Application for Final Examination and Certification of resource recovery equipment at the Pasco County Resource Recovery Facility. We have determined that your application is complete.

We will inspect the installed equipment at a mutually agreeable time within the next 30 days. Please advise me of a convenient time for this inspection.

Sincerely,

Jan Rae Clark

Jan Rae Clark
Environmental Manager
Solid Waste Section

JRC/jrc

cc: Bob Butera
Melton McKown
File

Department of
Environmental Protection

Lawton Chiles
Governor

Twin Towers Office Building
2600 Blair Stone Road
Tallahassee, Florida 32399-2400

Virginia B. Wetherell
Secretary

January 30, 1996

Mr. Melton McKown
Florida Department of Revenue
Tax Policy and Dispute Resolution
Post Office Box 7443
Tallahassee, Florida 32314-7443

Dear Mr. McKown:

Enclosed is a copy of the Application for Final Examination and Certification of resource recovery equipment at the Pasco County Resource Recovery Facility. We are reviewing the application for compliance with Section 62-704.400 and .410, Florida Administrative Code. Our Final Examination Report will be forwarded to you when complete.

Sincerely,

Jan Rae Clark
Environmental Manager
Solid Waste Section

JRC/jrc

Enclosure

cc: Bob Butera
File

Application for
☐ Preliminary Examination
☒ Final Examination and Certification of Resource Recovery and Recycling Equipment

D.E.P.
JAN 31 1996
DISTRICT
TAMPA

An application for preliminary examination of proposed Resource Recovery equipment is required for issuance of preliminary examinati report pursuant to Rule 17-704.400, Florida Administrative Code (F.A.C.). An application for final examination and certification is required final examination and certification of Resource Recovery equipment, pursuant to Rule 17-704.410, F.A.C. An applicant may not apply for fir examination and certification of Resource Recovery equipment before that equipment is installed.

1. Identity of Applicant

Applicant's Name: William R. Crellin, Jr.

Mailing Address: 14230 Hayes Road, Spring Hill FL 34610

Phone Number: (813) 856-2917

2. a. Name of the facility or project: Pasco County Resource Recovery Facility

b. Construction permit number for the facility: PSD FL 127 (AC51-266667 for addition of mercury controls)

c. Street address of the facility (Main Entrance): 14230 Hayes Road
Spring Hill FL 34610

d. Estimate the date when the facility or project will be ready for operation: November 1, 1995

3. Name of the unit of local government that will eventually own or benefit from the resource recovery equipment:
Pasco County, Florida

Attach proof of contractual agreement between the purchaser of the equipment and the unit of local government which is to benefit fro or own the resource recovery equipment.
See attached Appendix A, Service Agreement (dated March 28, 1989)

4. Describe the resource recovery process (include technology used and materials or energy recovered): Attach descriptions (includir blueprints, drawings, engineering plans, etc.) that will indicate where and how the equipment is integrated into the resource recove process. (attach additional sheets, if necessary)
See attached Appendix B, Description of Process
See attached Appendix C, Engineering Drawings

5. Attach a numbered listing of equipment which the applicant declares is qualified resource recovery equipment subject to the exemptic provisions of Rule 17-704.400, 17-704.410, 17-704.420, and 12A-1.001(27), F.A.C., using the format on page 3.
a. Use the "Item No." column to sequentially number equipment on the list.
b. Use the "Item Description" column to provide the name and a brief description of the equipment.
c. Use the "Number of Pieces" column to indicate how many of this particular piece of equipment are being certified.
d. Use the "Process Description" column to indicate the page number of the process description text where the equipment and it's functio is described.
If drawings are submitted as supporting documentation:
e. Use the "Drawing Number" column to indicate the drawing number on which the equipment is shown.
f. Use the "Drawing Item No." column to indicate what number on the drawing represents this piece of equipment.
g. Use the "Equipment Cost" column to indicate the cost of the equipment.

TAA-2/86

Effective Date August 14, 1990

DER Application No. _____ (Filled in by DER)

Listing of Major Equipment for Pasco County Resource Recovery Facility (Facility Name)

Item No.	Item Description	Number of Pieces	Process Description page reference	Drawing No.	Drawing Item No.	Equipment Cost
1.	Carbon Injection Storage Silo, Metering Equipment and Blowers (by Smoot Co.)	1	Appendix B, Pg 1	14297-S2 (1&2)	NA	$232,000
2.	Motor Control Centers (A. Bradley Co.)	3	Appendix B, Pg 1	K-1028-G-E15	NA	$8,031
3.	Circuit Breakers	3	Appendix B, Pg 1	K-1028-G-E16	NA	$5,296
4.	Concrete for Carbon Silo Foundation	34 cu yd	Appendix B, Pg 1	1028-S-01	NA	$1,902
5.	Electrical Cable, Tray, Conduit, Ground Rods, Connectors (Metro Electric)	1 Lot	Appendix B, Pg 1	NA	NA	$18,766
6.	Rebar & Anchor Belts (Metro Steel)	1 Lot	Appendix B, Pg 1	1028-S-01	NA	$1,450
7.	Hydraulicly Bent Pipe Elbows (Rubin Iron Works)	51	Appendix B, Pg 1	NA	NA	$2,709
8.	Carbon Pipe & Fittings (Bert Lowe Supply)	1 Lot	Appendix B, Pg 1	NA	NA	$2,274
9.	Drain & PVC Drain Pipe (Pasco Pipe Supply)	1 Lot	Appendix B, Pg 1	1028-S-01	NA	$329
10.	Stainless Steel Injection Nozzle Pipe (Bayport Valve)	1	Appendix B, Pg 1	NA	NA	$254
11.	Zinc Primer Paint (Bert Lowe Supply)	3 Gal	Appendix B, Pg 1	NA	NA	$317
12.	Paint	33 Gal	Appendix B, Pg 1	NA	NA	$861
13.	1" Galvanized Pipe & Fittings for Air Line	1 Lot	Appendix B, Pg 1	NA	NA	$941
14.	Rock	1 Load	Appendix B, Pg 1	NA	NA	$340

DER Form # 17-704.900(1)
Form Title Ap for Prelim Exam, Final Exam & of Resource Recovery & Recycling E
Effective Date August 14, 1990
DER Application No _____
(Filled in by DER)

6. Certification A shall be completed if the applicant wishes to certify only equipment appearing on the list in Rule 17-704.600, F.A.C.

Certification B shall be completed if the applicant wishes to certify equipment not appearing on the list in Rule 17-704.600, F.A.C., or equip appearing on the list in Rule 17-704.600, F.A.C. together with auxiliary equipment.

Certification A

I hereby certify that the equipment contained herein is Resource Recovery Equipment as defined in Rule 17-704.200(12), F.A.C. I further c that all of the equipment meets the criteria set forth in Rule 17-704.420, F.A.C., and all of the equipment appears on the list in Rule 17-704.600, F

Robert Sitz
Signature of Purchaser

ROBERT SITZ, FACILITY MANAGER
Name and Title

Date: OCTOBER 27, 1995

Certification B

I hereby certify that the equipment contained herein is Resource Recovery Equipment as defined in Rule 17-704.200(12), F.A.C. I further certif the equipment, including all auxiliary equipment associated with that equipment, meets the criteria set forth in Rule 17-704.420, F.A.C.

William Robert Crellin, Jr., PE
Signature of Professional Engineer

William Robert Crellin, Jr.
Regional Chief Engineer
Name and Title

Affix Seal Here

Florida Registration No. 3092969

Date 9/1/95

7. The undersigned applicant is aware that statements made in this form and attached exhibits constitute an application for certification of Resc Recovery equipment from the Florida Department of Environmental Regulation. The applicant certifies that the information in this applicat true, correct, and complete to the best of his knowledge and belief.

William Robert Crellin, Jr., PE
Signature of Applicant

William Robert Crellin, Jr.
Regional Chief Engineer
Name and Title

Date 9/1/95

An applicant shall submit four (4) copies of the application to:

Environmental ~~Administrator~~ Manager
Solid Waste Section
Department of Environmental ~~Regulation~~ Protection Mail Station 4545
Twin Towers Office Building
2600 Blair Stone Road
Tallahassee, Florida 32399-2400
904/922-6104

APPENDIX A

Contractual Agreement

75

AMENDED AND RESTATED
SERVICE AGREEMENT

Between

OGDEN MARTIN SYSTEMS OF PASCO, INC.

AND

PASCO COUNTY

Dated as of MARCH 28, 1989

AMENDED AND RESTATED SERVICE AGREEMENT

THIS AMENDED AND RESTATED SERVICE AGREEMENT made and entered into as of the 28th day of March, 1989, by and between Ogden Martin Systems of Pasco, Inc., a Florida corporation, ("Contractor"), and Pasco County, Florida, a political subdivision of the State of Florida, acting by and through its Board of County Commissioners ("County").

RECITALS:

WHEREAS, the County is empowered to enter into this Service Agreement with the Contractor providing for solid waste disposal services by the Processing of Processible Waste delivered by or on behalf of County to the Facility and the operation and maintenance of the Facility pursuant to the terms hereof;

WHEREAS, the County has selected the Contractor, pursuant to its Request for Proposals, dated January 15, 1988, in reliance on the skill, expertise and past successful experience with mass burn technology of the Contractor and its Licensor, Martin GmbH Fur Umwelt- und Energietechnik ("Licensor") to design, construct, start-up, Acceptance Test, operate and maintain the Facility as a service to the County, in accordance with the terms and provisions of the Construction Agreement, this Service Agreement, and, as applicable, the Related Documents as hereinafter defined;

WHEREAS, the County has been authorized and empowered by the provisions of Chapter 87-441, Florida Statutes (1987), to issue its solid waste disposal and resource recovery bonds which the County intends to use, together with other moneys available to the County, to be applied to the cost of financing the design, construction, start-up and Acceptance Testing of the Facility and the design and construction of functionally related facilities in connection with the Project, as hereinafter defined;

WHEREAS, the County and the Contractor entered into the Construction and Service Agreements, dated as of December 20, 1988; and

WHEREAS, the parties desire to modify and amend said agreements in certain respects; and

WHEREAS, the County and the Contractor have entered into an Amended and Restated Construction Agreement of even date herewith whereby the Contractor is obligated to design, construct, start-up and Acceptance Test the Facility; and

WHEREAS, the Contractor shall operate and maintain the Facility so as to provide certain solid waste Processing services to the County, and the County will deliver or cause to be delivered to the Facility certain quantities of Processible Waste to be Processed at the Facility in accordance with the terms and conditions of this Service Agreement; and

WHEREAS, Odgen Corporation ("Guarantor") has executed the Guarantee set forth in Schedule 1 guaranteeing the

Contractor's performance of its obligations under the Construction Agreement and this Service Agreement.

NOW, THEREFORE, in consideration of the mutual premises set forth above, and the terms and conditions hereinafter set forth, and for other good and valuable consideration, receipt of which is hereby acknowledged, the Contractor and the County do hereby agree as follows:

ARTICLE I

COOPERATION; DOCUMENTS

Section 1.01 Cooperation. The Parties shall cooperate and use their best efforts, pursuant to the terms of this Service Agreement, to facilitate the Processing and disposal of Processible Waste delivered to the Facility by or on behalf of the County. Accordingly, the Parties agree in good faith to mutually undertake the resolution of disputes, if any, in an equitable and timely manner so as to avoid the need for resolution of such disputes in accordance with Article IX.

Section 1.02 Service Agreement Documents. The following Schedules are attached hereto and made a part of this Service Agreement.

Schedule 1 - Guarantee
Schedule 2 - Performance Guarantees
Schedule 3 - Operating Parameters
Schedule 4 - Scheduled and Unscheduled Maintenance
Schedule 5 - Performance Test Procedures
Schedule 6 - Power Purchase Agreement
Schedule 7 - Insurance
Schedule 8 - Adjustment Factor
Schedule 9 - Pass Through Costs
Schedule 10 - Licensor's Guarantee

Post-it™ brand
Fax Transmittal Memo 7672

To NANCY DELANEY		No. of Pages ONE	Today's Date 7/10/95 Time 9:35 a.m.
Company OGDEN HILLSBOROUGH		From CORAZON GALANO	
Location		Company OGDEN PROJECTS INC.	
Fax # (813) 684-7964	Telephone #	Location FAIRFIELD, NJ	Dept. Charge
Comments		Fax #	Telephone # (201) 882-7111
		Original Disposition: ☐ Destroy ☐ Return ☐ Call for pickup	

County and Contractor, have caused this Service Agreement to be dated as of the date and year first written above.

PASCO COUNTY, FLORIDA

By _____
Chairman

ATTEST:

_____
Clerk

Approved As To
Legal Form and
Content

Ben Herrill
County Attorney

OGDEN MARTIN SYSTEMS OF
PASCO, INC.

By _____
David L. Sokol
President & Chief
Executive Officer

ATTEST:

_____
Assistant Secretary

APPENDIX B

Description of Process

APPENDIX B

Description of Process

The Pasco County Resource Recovery Facility (PCRRF) is a waste-to-energy facility that processes municipal solid waste, generates electrical power, and recovers ferrous metals from the ash residue. The PCRRF was placed in commercial operation on May 15, 1991. An application for Certification of Resource Recovery and Recycling Equipment was completed at that time.

Florida state law has mandated that the PCRRF must be retro-fitted with mercury control equipment. This application is for the addition of that equipment only.

The control of mercury from air emissions has been achieved through the injection of activated carbon into the flue gas stream. The point of injection is immediately upstream of the dry gas scrubbers.

The activated carbon is received and stored at the site in a 3000 cubic foot storage silo (48 feet high by 12 feet in diameter). The carbon is fed through a rotary air lock valve to a surge hopper. From the hopper it is metered out via a screw feeder into an eductor. From the eductor the carbon is blown by 7.5 HP blowers through 2 inch piping to the injection point. The one silo feeds three separate trains, one to each of the three combustion units in the PCRRF.

All of the feeding, metering and blowing equipment is housed beneath the carbon silo and is totally enclosed. The silo and equipment was manufactured by the Smoot Company. Their drawings #14297 S1, H297 52-Sht 1, 14297 S2-Sht 2, and 14297 S3 are at Appendix C.

Auxiliary equipment required for a complete installation included a concrete foundation, rebar and anchor bolts, forming lumber, 2 inch carbon piping and fittings, 1 inch instrument air piping and fittings, motor control centers, electrical cable, conduit, cable tray and painting supplies.

APPENDIX C

Engineering Drawings

RECEIVED
JAN 07 1998
D E P

LAW
ENGINEERING AND ENVIRONMENTAL SERVICES, INC.

PROJECT MANUAL
FOR
INTERMEDIATE COVER FOR CELL A-1
WEST PASCO LANDFILL
AT
RESOURCE RECOVERY FACILITY

BID NO. 98-___

Prepared For:

PASCO COUNTY
BOARD OF COUNTY COMMISSIONERS
UTILITY SERVICES
NEW PORT RICHEY, FLORIDA 34654

Prepared By:

LAW ENGINEERING AND ENVIRONMENTAL SERVICES, INC.
4919 WEST LAUREL STREET
TAMPA, FLORIDA 33607

DECEMBER 1997

H:\USERS\40140\REPORT\SPECS\T4170317.V1.DOC

LAW PROJECT 40141-7-0317 COPY NO. _____ VOLUME 1 OF 2

TABLE OF CONTENTS

VOLUME 1

PAGE

DIVISION 0 - BIDDING AND CONTRACT REQUIREMENTS

Section 00020	Invitation To Bid	00020
Section 00100	Instructions to Bidders	00100
Section 00300	Bid Form	00300
Section 00402	List of Similar Projects and References	00402
Section 00405	Schedule of Bid Items	00405
Section 00406	List of Proposed Subcontractors	00406
Section 00409	Non-Collusion Affidavit	00409
Section 00500	EJCDC Standard Form Of Agreement	00500
Section 00510	Exhibit "A"	00510
Section 00607	Notice of Award	00607
Section 00609	Notice to Proceed	00609
Section 00610	Construction Performance Bond	00610
Section 00620	Construction Payment Bond	00620
Section 00700	General Conditions	00700
Section 00800	Supplementary Conditions to the General Conditions	00800

RECEIVED
JAN 07 1998
D E P

SECTION 00020

INVITATION TO BID

PASCO COUNTY

BID NO. 98-___

INTERMEDIATE COVER FOR CELL A-1, WEST PASCO LANDFILL
AT
RESOURCE RECOVERY FACILITY

FOR

PASCO COUNTY
BOARD OF COUNTY COMMISSIONERS
NEW PORT RICHEY, FLORIDA 34654

BIDS: Sealed bids in triplicate, will be received by the Board of County Commissioners of Pasco County, Florida, Attention: Purchasing Department, 8919 Government Drive, New Port Richey, until _____ at 2:00 PM for the Intermediate Cover for Cell A-1, West Pasco Landfill at the Resource Recovery Facility, as described below, at which time the said bids will be opened and read publicly. Any bids received after the date and time specified will not be considered.

Pre-Bid Conference: A pre-bid conference will be held _____ at 10:00 AM, at the Public Works/Utilities Building, Utilities Conference.

Background: The project described in these Contract Documents include furnishing all labor equipment and materials necessary to install the Intermediate Cover for Cell A-1, West Pasco Landfill, and other work as shown in the drawings.

Contract Documents: The Contract Documents are dated and are bound as follows:

- Volume 1 of 2 - "PROJECT MANUAL"
- Volume 2 of 2 - "PROJECT MANUAL (TECHNICAL SPECIFICATIONS)"
- Contract Drawings

All work performed shall be in accordance with the Contract Documents pertaining thereto, which may be examined at:

Pasco County Purchasing Department
Pasco County Government Complex
8919 Government Drive
New Port Richey, Florida 34654
(813)847-2411

or

Pasco County Resource Recovery
Facility (Second Floor, Pasco County Office)
14230 Hays Road
Spring Hill, Florida 34610
(813)856-0119 fax (813)856-0007

or

Law Engineering and Environmental Services, Inc.
4119 W. Laurel Street
Tampa, Florida 33607
(813)289-0750 fax (813)289-5474

One copy of the Contract Documents, including blank bid forms, may be obtained upon payment of $50.00 in cash or check payable to Law Engineering and Environmental Services, Inc. (ENGINEER), which will not be refundable.

Bid Security: A certified or cashier's check on a national or state bank or a bid bond in a sum of not less than five percent (5%) of the amount of the bid, made payable to the OWNER, shall accompany each bid as a guarantee that the Bidder will not withdraw from the competition after the opening of bids. In the event that the Contract is awarded to the Bidder, he will enter into the Contract and furnish and pay for the required performance and payment bonds, failing to do so may result in the OWNER retaining the bid deposit for liquidated damages. Bids shall be prepared, addressed and submitted in compliance with detailed instructions as set forth in the Instructions to Bidders.

Performance and Payment Bonds: The performance and payment bonds in the full amount of the contract price shall be written by a surety company, acceptable to the OWNER, licensed to do business in the State of Florida, and in accordance with Articles 5.1 and 5.2 of the General Conditions, and as amended in the Special Conditions.

Rejection of Bids: The OWNER reserves the right to reject any and all bids with or without cause, to waive technical errors and informalities, or to accept the bid which in his judgment best serves the OWNER.

Conflict of Interest: The award hereunder is subject to provisions of Chapter 112, F.S. All Bidders must disclose - with their bid - the name of any officer, director, or agent who is also an employee of Pasco County, Florida. Further, all Bidders must disclose the name of any Pasco County employee who owns, directly or indirectly, an interest of five percent (5%) or more in the bidder's firm or any of its branches.

Insurance Required: It shall be the responsibility of the successful Bidder to maintain Workmen's Compensation Insurance, Public Liability Insurance, Property Damage Insurance, and Vehicle Liability Insurance during the time any of his personnel are working on Pasco County property (refer to Sections 00700 and 00800).

Local, State and Federal Compliance Requirements: Bidders shall comply with all local, state and federal directions, orders and laws as applicable to this bid and subsequent awards, including but not limited to:

A. Equal Employment Opportunity (EEO) - in compliance with Executive Order 11246, as applicable to the ward.

B. Minority Business Enterprise (MBE) - as applicable to this award.

C. Occupational Safety and Health Act (OSHA) - as applicable to this award.

OWNER: PASCO COUNTY BOARD OF COUNTY COMMISSIONERS

By: Frank Fortino
Purchasing Director

Date: _____

Bid No._____

Date: _____

Published on: _____

SECTION 00100

INSTRUCTIONS TO BIDDERS

PROJECT: Intermediate Cover for Cell A-1, West Pasco Landfill, BID No. 98-___.

BID MUST BE RECEIVED AND OPENED BY: _____ at 2:00 P.M.

PLACE OF BID OPENING AND DELIVER TO: Purchasing Department, 8919 Government Drive, New Port Richey, Florida 34654.

GENERAL TERMS AND CONDITIONS

1. **Bids:** The responsibility for delivering the bid to the Purchasing Department on or before the stated time and date will be solely and strictly the responsibility of the bidder. The Purchasing Department will be in no way responsible for delays caused by the mail service or any other occurrence.

   The lower left corner of the envelope in which you mail your bid must be a notated SEALED BID 98-___. The bidder shall be responsible for reading, very carefully, and understanding completely, the requirements and the specifications of the items bid upon. Bid time will be and must be scrupulously observed. Under no circumstances will bids delivered after the time specified be considered. Such bids will be returned to the vendor unopened. Do not include more than one (1) bid per envelope.

   Bidders will not be allowed to modify their bids after the opening time and date. Offers by telephone or telegram will not be accepted. Bid files may be examined during normal working hours by appointment.

2. **Prices:** Firm prices shall be quoted, typed or printed in ink, and include all packing, handling, shipping charges, and delivery to the destination when specified. If the quoted prices is subject to time limitation as to acceptance, the expiration of such time limitation shall be clearly stated.

3. **Conditions of Materials and Packing:** Unless otherwise indicated, it is understood and agreed that any item offered or shipped on this bid shall be New and in First Class Condition. It is further understood that all containers shall be new and suitable for storage or shipment and that prices include standard commercial packaging.

4. **Claims:** The successful bidder(s) will be responsible for making any and all claims against carriers for missing or damaged items.

5. **Manufacturer's Name:** Any manufacturer's names, trade names, information, and/or catalog numbers used herein are for the purpose of description and establishing general quality levels. Such references are not intended to be restrictive; products or any manufacturer may be offered, if they are approved as equals. The determination as to whether any alternate product or service is or is not equal shall be made by the OWNER and Law Engineering and Environmental Services, Inc. (ENGINEER) and such determination shall be final and binding upon all bidders.

6. **Specifications:** Any deviation from specifications listed herein must be clearly indicated; otherwise, it will be considered that items offered are in strict compliance with these specifications and the successful bidder will be held responsible therefore. Deviations must be explained in detail on an attached sheet(s) and itemized by number. Any item or items that do not meet OWNER specifications in a reasonable time, the bidder will be required to compensate the OWNER for the difference in price entailed in going to the next low bidder.

7. **No Bid:** Where more than one item is listed, any items not bid, the "STATEMENT OF NO BID" should be returned. Failure to do so could be an indication that the bidder does not wish to be considered for future bids.

8. **Acceptance and Rejections:** The OWNER reserves the right to reject any and all bids in whole or in part; to award any item, group of items, or total bid, unless otherwise specified by the bidder, to waive any informality or technical defects in bids, to accept the lowest bid meeting specifications or accept the bid which is most advantageous and in the best interest of Pasco County. Delivery time, as well as price, can be a strong factor in determining which bid will be the most advantageous to Pasco County.

9. **Taxes:** Pasco County does not pay Federal Excise and Sales Taxes on direct purchases of tangible personal property. See Exemption Number on face of Purchase Order. This exemption does not apply to purchases of tangible personal property made by contractors who use the tangible personal property in the performance of contracts for improvement of OWNER-owned real property (see State of Florida, Chapter 192, Florida Statutes (F.S.)).

10. **Interpretations:** Any questions concerning conditions, specifications, or requests for additional information pertaining to this bid must be in writing addressed to Pasco County Board of County Commissioners, Utility Services, Attention: Vincent Mannella, P.E., for receipt no later than ten (10) days prior to bid opening. Inquiries must reference the bid number. Failure to comply with this condition will result in bidder waiving her/his right to dispute the bid specifications. Answers to questions and/or supplemental instructions will be in the form of written addendum to the bidding documents prior to the bid opening.

11. **Conflict of Interest:** The award hereunder is subject to provisions of Chapter 112, F.S. All bidders must disclose with their bid the name of any officer, director, or agent who is also an employee of Pasco County, Florida. Further, all bidders must disclose the name of any Pasco County employee who owns, directly or indirectly, an interest of five percent (5%) or more in the bidder's firm or any of its branches.

12. **Legal Requirements:** Federal, State, County, and local laws, ordinances, rules, and regulations that in any manner affect the items covered herein apply. Lack of knowledge by the bidder will in no way be a cause for relief from responsibility.

13. **Bid Tabulations:** Bidders desiring a copy of the Bid Tabulation of this Invitation to Bid may request same by enclosing a self-addressed, stamped envelope with their bid.

14. **Pasco County Bid Form:** All bid proposals must be submitted on our standard Bid Form. Bid proposals on vendor quotation forms will not be accepted.

15. **Non-Appropriation of Funds:** In the case of non-appropriation of funds to continue the function performed or obtained by this award, the award shall be terminated when appropriated funds are expired and the bidder shall have only the right and remedy to take possession of equipment pertaining to the award.

16. **Trench Safety Act Form:** N/A

17. **Bid Identification:** Bids received without being identified in the lower left hand corner of the envelope may be rejected and returned to the sender. If bids are sent via Express Mail, bid proposal pages MUST be placed in a sealed envelope, properly identified, within the Express Mail envelope. No responsibility will attach to Pasco County or any official or employee thereof, for the pre-opening of, post-opening of, or the failure to open, a proposal not properly addressed and identified.

18. **Subsurface Conditions:** Soil borings, reports or other subsurface information, if available, are obtained and intended for design and estimate purposes only. They are made available to Bidders in good faith, so that said Bidders may have access to identical subsurface information which is available to the OWNER and are not intended as a substitute for personal investigation, interpretation and judgment of the Bidders.

19. **Subcontractor List:**

    A. In conjunction with the Bid Form, Bidder shall submit a list of names of the subcontractors and major material suppliers proposed for the principal portions of the work. Submit a list on form provided by the ENGINEER.

    B. Prior to award of contract, ENGINEER will notify the Bidder in writing if either the OWNER or the ENGINEER has an objection to any person or entity listed. Upon such reasonable objection, the Bidder shall propose an acceptable substitute person or entity in accordance with Article 6.8.1 and 6.8.2 of the General Conditions.

SECTION 00300

BID FORM

INTERMEDIATE COVER FOR CELL A-1, WEST PASCO LANDFILL
AT
RESOURCE RECOVER FACILITY

FOR

PASCO COUNTY
BOARD OF COUNTY COMMISSIONERS
NEW PORT RICHEY, FLORIDA 34654

PASCO COUNTY BID NO. 98-___

(Note: Use black ink for completing this form)

Bid of _____
(Name)

_____
(Address)

to furnish all materials, equipment and labor and to perform all work in accordance with the Contract Documents for: constructing the Intermediate Cover for Cell A-1, West Pasco Landfill, and other work, as shown in the drawings for Pasco County Board of County Commissioners located in New Port Richey, Florida.

Submitted to: Pasco County Board of County Commissioners
Pasco County, Florida (OWNER)

Frank Fortino, Purchasing Director
Pasco County Purchasing Division
8919 Government Drive
New Port Richey, Florida 34654

1.1 BIDDER'S DECLARATION AND UNDERSTANDING

The undersigned Bidder has carefully examined the Contract Documents and the site of the proposed work and is familiar with the nature and extent of the work and any local conditions that may in any manner affect the work to be done.

The undersigned agrees to do all the work and furnish all materials called for by the Contract Documents, in the manner prescribed therein and to the standards of quality and performance established by the ENGINEER for the lump sum price or the unit prices stated in the spaces herein provided, for each of the items or combination of items stipulated.

Base Bid (which is the basis for award): Contingency plus lump sum cost to furnish all labor, materials, equipment and incidentals required to construct the Intermediate Cover for Cell A-1, West Pasco Landfill, and other work, as shown in the drawings.

Contingency	$15,000
Lump Sum	$_____00/100/Dollars
Base Bid: (Lump Sum of)	$_____00/100/Dollars

The undersigned understands that this contract is being bid on a lump sum basis and the basis for award of contract is the lump sum cost as bid by the Bidder. The SCHEDULE OF BID ITEMS that follows, Section 00405 is intended to be a guide and to aid the OWNER in evaluation of bids. At the present time, the OWNER does not intend to increase or decrease the work as required in the contract documents. However, if required, the unit prices provided by the Bidder shall be binding on the successful Bidder and OWNER for all change orders used for these deviations. Any under estimating or over estimating (of quantities in the SCHEDULE OF BID ITEMS) by the Bidder will not entitle an adjustment to this lump sum contract. It is the Bidders responsibility to accurately estimate the quantities and work effort necessary to complete this lump sum project.

All quantities can be taken from the Contract Drawings.

The undersigned understands unit prices provided shall cover all costs including, but not limited to: labor, materials, tools, equipment, shoring, removal, overhead, profit, bonds, insurance, etc., to cover the finished work of the several kinds called for. No allowance will be made for such additional work performed without either a work directive change, and/or a change order, or prior to making any measurements necessary to determine the quantities. Changes shall be processed in accordance with the applicable Paragraph(s) of the General Conditions and Supplemental General Conditions.

1.2 SURETY

Accompanying this proposal is a certified or cashier's check or a bid bond in the amount of $_____ (not less than 5% of the bid) made payable to: Pasco County Board of County Commissioners which is to be forfeited as liquidated damages, if, in the event this proposal is accepted, the undersigned fails to execute the agreement and furnish and pay for satisfactory performance and payment bonds under the conditions and within the time specified in the proposal, otherwise said certified or cashier's check or bid bond is to be returned to the undersigned.

1.3 CONTRACT EXECUTION TIME

The undersigned agrees that within ten days, not including Sundays and legal holidays, from the date of acceptance of this proposal, to execute the agreement (Section 0500) and furnish and pay for satisfactory performance and payment bonds (Sections 00610 and 00620), in the full amount of the Contract price, guaranteeing the faithful performance of the work and payment of bills.

1.4 CONTRACT COMPLETION TIME

The undersigned also agrees to substantially complete the work within the time specified in the Agreement (Section 00500) after the date when the Contract Time commences to run and to be completed and ready for final payment within the time specified in the Agreement (Article 3) after the Contract Time commences to run.

The undersigned further agrees to reimburse the OWNER, as liquidated damages for each calendar day elapsing between the date herein specified as the date of substantial completion and final completion and the actual dates of such substantial completion of the contract work the amount specified in the Agreement. Refer to Article 3 of the Agreement.

1.5 CERTIFICATES AND LICENSE

The successful Bidder further agrees to furnish the OWNER, before commencing the work under this contract, the Certificates of Insurance, as specified in these documents, and a copy of their Contractor License.

1.6 ADDENDA

The Bidder hereby acknowledges that he has received Addenda ___, ___, ___, ___, ___, and ___ (Bidder shall insert number of each addendum received) and agrees that all addenda issued are hereby made part of the Contract Documents, and the Bidder further agrees that his Proposal(s) includes all impacts resulting from said addenda.

1.7 SALES AND USE TAXES

The Bidder agrees that all Federal, State, and local sales use taxes are included in the stated bid prices for the work.

The following documents are attached to and made a condition of this Bid:

- List of Similar Projects and References (Section 00402)
- Bid Security (Bid Bond, Cashiers Check or Certified Check)
- List of Proposed Subcontractors (Section 00406)
- Power of Attorney (for Bid Bond only)
- Noncollusive Affidavit (Section 00409)

SECTION 00402

LIST OF SIMILAR PROJECTS AND REFERENCES

PROJECT: _____

COMPLETION DATE: _____

CONTACT: _____

_____

_____

PROJECT: _____

COMPLETION DATE: _____

CONTACT: _____

_____

_____

PROJECT: _____

COMPLETION DATE: _____

CONTACT: _____

_____

_____

Bidder's Name: _____ Signature: _____

SECTION 00405

SCHEDULE OF BID ITEMS

ITEM	DESCRIPTION	ESTIMATED QUANTITY	UNITS	UNIT PRICE	ESTIMATED AMOUNT
1	Mobilization	1	LS.		
2	Site Preparation	10	AC.		
3	Geomembrane Cover 20 mil	435,600	SF.		
4	Contingency*	1	LS.	$15,000	$15,000
	TOTAL				

*Requires pre-approval by Pasco County

SECTION 00406

LIST OF PROPOSED SUBCONTRACTORS

The following is a complete list of all of the subcontractors to be used if the undersigned is awarded the Contract for this project:

Type of Work	Name and Address of Subcontractor

Bidder's Name: _____ Signature: _____

SECTION 00409

NON-COLLUSION AFFIDAVIT

State of _____)
ss.
County of _____)

_____ being first duly sworn, deposes and says that:

(1) He is the _____,
(Owner, Partner, Officer, Representative or Agent)

of _____ the Bidder that has submitted the attached Bid;

(2) He is fully informed respecting the preparation and contents of the attached Bid and of all pertinent circumstances respecting such Bid;

(3) Such Bid is genuine and is not a collusive or sham Bid;

(4) Neither the said Bidder nor any of its officers, partners, owners, agents, representatives, employees or parties in interest, including this affiant, have in any way colluded, conspired, connived or agreed, directly or indirectly, with any other Bidder, firm, or person to submit a collusive or sham Bid in connection with the work for which the attached Bid has been submitted; or to refrain from bidding in connection with such work; or have in any manner, directly or indirectly, sought by agreement or collusion, or communication, or conference with any Bidder, firm, or person to fix the price or prices in the attached Bid or of any other Bidder, or to fix any overhead, profit, or cost elements of the Bid price or the Bid price of any other Bidder, or to secure through any collusion, conspiracy, connivance, or unlawful agreement any advantage against (Recipient), or any person interested in the proposed work;

(5) The price or prices quoted in the attached Bid are fair and proper and are not tainted by any collusion, conspiracy, connivance, or unlawful agreement on the part of the Bidder or any other if its agents, representatives, owners, employees or parties in interest, including this affidavit.

By: _____

Its: _____
(Title)

SECTION 00500

EJCDC
STANDARD FORM OF AGREEMENT
BETWEEN OWNER AND CONTRACTOR
ON THE BASIS OF A STIPULATED PRICE

THIS AGREEMENT is dated as of the _____ day of _____ in the year 19__ by and between BOARD OF COUNTY COMMISSIONERS OF PASCO COUNTY, FLORIDA (hereinafter called OWNER) and _____ hereinafter called CONTRACTOR).

OWNER and CONTRACTOR, in consideration of the mutual covenants hereinafter set forth, agree as follows:

Article 1. WORK.

CONTRACTOR shall complete all work as specified or indicated in the Contract Documents. The work is generally described as follows: Construct the Intermediate Cover for Cell A-1, West Pasco Landfill, and other work, as shown in the drawings.

Article 2. ENGINEER.

The Project has been designed by:

Law Engineering and Environmental Services, Inc.
4919 West Laurel Street
Tampa, Florida 33607

The construction project will be administered by:

Pasco County Board of County Commissioners
Utility Services
14230 Hays Road
Spring Hill, Florida 34610

Law Engineering and Environmental Services, Inc., who is hereinafter called ENGINEER and who is to act as OWNER's representative, assume all duties and responsibilities and have the rights and authority assigned to ENGINEER in the Contract Documents in connection with completion of the work in accordance with the Contract Documents.

Article 3. CONTRACT TIME.

3.1 The work will be substantially completed within 60 days from the date when the Contract Time commences to run as provided in Paragraph 2.3 of the General Conditions, and completed and ready for final payment in accordance with Paragraph 14.13 of the General Conditions within 75 days from the date when the Contract Time commences to run.

3.2 Liquidated Damages. OWNER and CONTRACTOR recognize that time is of the essence of this Agreement and that OWNER will suffer financial loss if the work is not completed within the times specified in Paragraph 3.1 above, plus any extensions thereof allowed in accordance with Article 12 of the General Conditions. They also recognize the delays, expense and difficulties involved in proving in a legal proceeding the actual loss suffered by

OWNER if the work is not completed on time. Accordingly, instead of requiring any such proof, OWNER and CONTRACTOR agree that as liquidated damages for delay (but not as a penalty) CONTRACTOR shall pay OWNER Three hundred Dollars ($300.00) for each calendar day that expires after the time specified in Paragraph 3.1 for Substantial Completion until the work is substantially complete. After Substantial completion if CONTRACTOR shall neglect, refuse or fail to complete the remaining work within the Contract Time or any proper extension thereof granted by OWNER, CONTRACTOR shall pay OWNER Fifty Dollars ($50.00) for each calendar day that expires after the time specified in Paragraph 3.1 for completion and readiness for final payment.

Liquidated damages will not be limited to the amount of the contract price, but the OWNER may deduct and withhold from payments remaining due or sums remaining unpaid under the contract as partial or total payments remaining due or sums remaining unpaid under the contract as partial or total payments of liquidated damages. The OWNER shall have the right to apply as payment on such liquidated damages any money which is due to the CONTRACTOR by the OWNER, permitting the contract to continue and to finish the work, or any part of it, after the expiration of the contract time allowed, including extensions of time granted to the CONTRACTOR, shall in no way act as a waiver on the part of the OWNER of the liquidated damages due under the contract. In case of default of the contract and the completion of the work by the OWNER, the CONTRACTOR shall be liable for liquidated damages under the contract, but no liquidated damages shall be chargeable for any delay in the final completion of the work by the OWNER due to any unreasonable action or delay on the party of the OWNER. The contract will be considered complete when all work has been completed and has been accepted by the OWNER. In addition to the damages provided for in this contract, when the CONTRACTOR fails to complete the work within the contract time or within such additional time as may be granted by the OWNER, the OWNER may recover from the CONTRACTOR amounts paid by the OWNER for damages suffered by third parties unless the failure to timely complete the work was caused by the OWNER's act or omission.

Article 4. CONTRACT PRICE.

4.1 OWNER shall pay CONTRACTOR for completion of the work in accordance with the Contract Documents in current funds at the lump sum or unit prices presented in the Bid form, attached to this agreement.

4.2 The parties expressly agree that the Contract Price is a stipulated sum, except with regards to the items in the Bid which are subject to unit prices.

Article 5. PAYMENT PROCEDURES.

CONTRACTOR shall submit the Application for Payment in accordance with Article 14 of the General Conditions. The Application for Payment will be processed by ENGINEER as provided in the General Conditions.

5.1 Progress Payments. OWNER shall make progress payments on account of the Contract Price on the basis of CONTRACTOR's Applications for Payment as recommended by ENGINEER, on or about the 1st day of each month during construction, as provided below. All progress payments will be on the basis of the progress of the work measured by the schedule of values established in paragraph 2.9 of the General Conditions (and in the case of Unit Price Work based on the number of units completed) or, in the event there is no schedule of values, as provided in the General Requirements.

5.1.1 Prior to Substantial Completion, progress payments will be made in an amount equal to the percentage indicated below, but, in each case, less the aggregate of payments previously made and less such amounts as ENGINEER shall determine, or OWNER may withhold, in accordance with paragraph 14.7 of the General Conditions.

90% of work completed.

5.1.2 Upon substantial completion, in an amount sufficient to increase total payments to CONTRACTOR to 95% of the Contract Price, less such amounts as ENGINEER shall determine, or OWNER may withhold, in accordance with paragraph 14.7 of the General Conditions.

5.2 Final Payment. OWNER shall make a single payment on account of the Contract price on the basis of CONTRACTOR's Application for Payment as recommended by ENGINEER. Upon final completion and acceptance of the work in accordance with Paragraph 14.13 of the General Conditions, OWNER shall pay the Contract Price as recommended by ENGINEER and agreed to by the OWNER as provided in said Paragraph 14.13.

Article 6. INTEREST.

All moneys not paid when due as provided in Article 14 of the General Conditions shall bear interest at the maximum rate allowed by law at the place of the Project.

Article 7. CONTRACTOR's REPRESENTATIONS.

In order to induce OWNER to enter into this Agreement CONTRACTOR makes the following representations:

7.1 CONTRACTOR has familiarized itself with the nature and extent of the Contract Documents, work, site, locality, and all local conditions and Laws and Regulations that in any manner may affect cost, progress, performance or furnishing of the work.

7.2 CONTRACTOR has studied carefully all reports of explorations and tests of subsurface conditions and drawings of physical conditions as provided in Paragraphs 4.2 and 4.3 and their subparts of the General Conditions, and accepts the determination set forth in Paragraphs SC-4.2, 4.2.1, 4.2.2, 4.2.6 and 4.3.2 of the Supplementary conditions of the extent of the technical data contained in such reports and drawings upon which CONTRACTOR is entitled to reply.

7.3 CONTRACTOR has obtained and carefully studied (or assumes responsibility for obtaining and carefully studying) all such examinations, investigations, explorations, tests, reports and studies (in addition to or to supplement those referred to in Paragraph 7.2 above) which pertain to the subsurface or physical conditions at or contiguous to the site or otherwise may affect the cost, progress, performance or furnishing of the work as CONTRACTOR considers necessary for the performance or furnishing of the work at the Contract Price, within the Contract Time and in accordance with the other terms and conditions of the Contract Documents, including specifically the provisions of Paragraph 4.2 and 4.3 and their subparts and SC-4.2.1, 4.2.2, 4.2.6 and 4.3.2 of the General Conditions; and no additional examinations, investigations, explorations, tests, reports, studies or similar information or data are or will be required by CONTRACTOR for such purposes.

7.4 CONTRACTOR has reviewed and checked all information and data shown or indicated on the Contract Documents with respect to existing Underground Facilities at or contiguous to the site and assumes responsibility for the accurate location of said Underground Facilities. No additional examinations, investigations, explorations, tests, reports, studies or similar information or data in respect to said Underground Facilities are or will be required

by CONTRACTOR in order to perform and furnish the work at the Contract Price, within the Contract Time and in accordance with the other terms and conditions of the contract Documents, including specifically the provisions of Paragraph 4.3 of the General Conditions.

7.5 CONTRACTOR has correlated the results of all such observations, examinations, investigations, explorations, tests, reports and studies with the terms and conditions of the Contract Documents.

7.6 CONTRACTOR has given ENGINEER written notice of all conflicts, errors or discrepancies that he has discovered in the Contract Documents and the written resolution thereof by ENGINEER is acceptable to CONTRACTOR.

Article 8. CONTRACT DOCUMENTS.

The Contract Documents which comprise the entire agreement between OWNER and CONTRACTOR concerning the work consist of the following:

8.1 This Agreement (pages 1 to 6, inclusive).

8.2 Exhibits to the Agreement (page 00510-1).

8.3 Notice of Award and Notice to Proceed.

8.4 General Conditions.

8.5 Supplementary Conditions.

8.6 Project Manual produced by Law Engineering and Environmental Services, Inc., Volume 1 of 2, consisting of Division 0 and as listed in table of contents thereof.

8.7 Project Manual - Technical Specifications produced by Law Engineering and Environmental Services, Inc., Volume 2 of 2, as listed in the table of contents thereof.

8.8 Drawings produced by Law Engineering and Environmental Services, Inc.

8.9 Addenda numbers _____ to _____, inclusive.

8.10 CONTRACTOR's Bid with attachments marked exhibit _____.

8.11 Documentation submitted by CONTRACTOR prior to Notice of Award (pages _____ to _____, inclusive).

8.12 The following which may be delivered or issued after the Effective Date of the Agreement and are not attached hereto: All Written Amendments and other documents amending, modifying, or supplementing the Contract Documents pursuant to Paragraphs 3.4 and 3.5 of the General Conditions.

There are no Contract Documents other than those listed above in this Article 8. The Contract Documents may only be amended, modified or supplemented as provided in the General Conditions.

Article 9. MISCELLANEOUS.

9.1 Terms used in this Agreement which are defined in Article 1 of the General Conditions will have the meanings indicated in the General Conditions.

9.2 No assignment by a party hereto of any rights under or interest in the Contract Documents will be binding on another party hereto without the written consent of the party sought to be bound; and specifically but without limitation moneys that may become due and moneys that are due may not be assigned without such consent (except to the extent that the effect of this restriction may be limited by law), and unless specifically stated to the contrary in any written consent to an assignment no assignment will release or discharge the assignor from any duty or responsibility under the Contract Documents.

9.3 OWNER and CONTRACTOR each binds itself, its partners, successors, assigns and legal representatives to the other party hereto, its partners, successors, assigns and legal representatives in respect of all covenants, agreements and obligations contained in the Contract Documents.

Article 10. OTHER PROVISIONS.

IN WITNESS WHEREOF, OWNER and CONTRACTOR have signed this Agreement in triplicate. One counterpart each has been delivered to OWNER, CONTRACTOR and ENGINEER. All portions of the contract Documents have been signed or identified by OWNER and CONTRACTOR or by ENGINEER on their behalf.

This Agreement will be effective on _____, 1996.

OWNER _____	CONTRACTOR _____
_____	_____
By _____	By _____
[CORPORATE SEAL]	[CORPORATE SEAL]

Attest _____

Address for giving notices

_____

_____

(If OWNER is a public body, evidence of authority to sign and resolution or other documents authorizing execution of Agreement).

Attest _____

Address for giving notices

_____

_____

License No. _____

Agent for service of process:

_____

(If CONTRACTOR is a corporation, attach evidence of authority to sign).

SECTION 00510

EXHIBIT "A"

Attach to the Agreement all the pages of the bid as signed by the Bidder and label them Exhibit "A" and include them as pages A-1 through A-__.

SECTION 00607

NOTICE OF AWARD

Dated _____, 19__

TO: _____
(Bidder)

PROJECT: _____

OWNER's CONTRACT NO. _____

CONTRACTOR FOR: Intermediate Cover for Cell A-1, West Pasco Landfill

You are notified that your Bid dated _____, 19__, for the above Contract has been considered. You are the apparent successful Bidder and have been awarded a contract for _____ (indicate total work, alternates or sections of work awarded).

The contract price of your contract is _____ Dollars ($_____).

Enclosed are four originals of the Contract Documents for your execution and subsequent return to this office for further processing.

You must comply with the following conditions precedent within fifteen (15) days of the date of this Notice of Award, that is by _____, 19__:

1. Execute all copies of the Agreement. Each Project Manual and set of contract drawings must bear your signature on the cover sheet. Do not date the Agreements or bonds; this will be accomplished upon execution of the contract by the OWNER. Submit a Power of Attorney authorizing OWNER to date bonds and Agreements.

2. Submit two originals of the Performance and Payment Bonds. Instructions to the Surety and the Principal for execution of the bonds are as follows:

   Where the CONTRACTOR is a Corporation, the Agreement and any bonds must be executed by the president or the Chairman of the Board of the Corporation. The Agreement or Bond is accompanied by a statement certified by a Secretary of the Corporation. The signatures of the persons executing the bond on behalf of the Principal and of the Surety, respectively, shall be dated on the signature line. If the bond is executed by an Attorney-in-Fact for the Surety, the accompanying Power of Attorney must be executed by persons whose authority to do so is plainly identified on the face of the Power of Attorney.

   Neither signatures nor the Corporate Seal may appear by facsimile unless the authority for them to appear in that form is plainly disclosed on the face of the document. The Secretary or other properly authorized Officer must certify and seal a statement declaring that the authority granted by the Power of Attorney remained in force on the date that the bond was executed by the Attorney-in-Fact.

3. Include three (3) copies of the Certificate of Insurance. The Certificate must name the OWNER and ENGINEER as an additional insured and the standard cancellation clause must read as follows:

   "Should any of the above described policies be canceled or changed by restricted amendment before the expiration date thereof, the issuing Company will give thirty (30) days written notice to the below named certificate holder."

Failure to comply with these conditions within the time specified will entitle OWNER to consider your Bid abandoned, to annul this Notice of Award and to declare your Bid Security forfeited.

Within twenty (20) days after you comply with the above conditions, the OWNER will return to you one fully signed counter part of the Contract Documents attached.

If you have any questions, or if we can be of further assistance, please do not hesitate to contact this office.

Sincerely,

_____

Purchasing Director

SECTION 00609

NOTICE TO PROCEED

Dated _____, 199_

OWNER's PROJECT NO. _____

CONTRACTOR FOR: Intermediate Cover for Cell A-1, West Pasco Landfill

CONTRACTOR:

_____

_____

_____

Gentlemen:

You are hereby notified to commence work on the subject contract on or before _____ and are to fully complete the work within 100 calendar days. In accordance with the contract documents, the Substantial Completion date for the project is _____. Extension in time will be written change order only.

Pasco County Board of County Commissioners
(Owner)

By _____
(Assistant County Administrator)

_____
(Printed Name and Title of above signer)

NOTE: Attach this notice to your contract making it a part thereof.

SECTION 00610

CONSTRUCTION PERFORMANCE BOND

BOND NO. _____

AMOUNT: $_____

KNOW ALL MEN BY THESE PRESENTS, that _____ located at _____ _____, as Principal, and _____ _____ as SURETY, located at _____ _____, are held and finally bound unto the Board of County Commissioners, Pasco County, Florida, as Obligee in the sum of _____ and 00/100 Dollars ($_____) for the payment whereof we bind ourselves, our heirs, executors, personal representatives, successors, and assigns, jointly and severally, firmly by these presents.

WHEREAS, Principal has entered into a CONTRACT which also includes the CONTRACT documents, including the Notice to BIDDERS, Instruction to BIDDERS, PROPOSAL, BID BOND, Letter of Intent, General Provisions, SPECIAL PROVISIONS, Technical SPECIFICATIONS, and PLANS and SPECIFICATIONS therein referred to and made a part thereof, and such alterations as may be made in said PLANS and SPECIFICATIONS as therein provided for, NOTICE TO PROCEED, PERFORMANCE BOND, PAYMENT BOND, and any CHANGE ORDER or SUPPLEMENTAL AGREEMENT with Obligee for the construction of Intermediate Cover for Cell A-1, West Pasco Landfill at Resource Recovery Facility in accordance with drawings and SPECIFICATIONS, which CONTRACT is by reference made a part hereof, and is hereinafter referred to as the CONTRACT.

THE CONDITION OF THIS BOND is that if Principal:

1. Performs the CONTRACT within the time restraints and in the manner as set forth in the CONTRACT documents.

2. Pays Obligee any and all losses, damages, including all delay damages, costs, and attorney's fees that Obligee sustains because of any default by Principal under the CONTRACT.

3. Performs the guarantee of all WORK and MATERIALS furnished under the CONTRACT applicable to the WORK and MATERIALS up to and including the one-year warranty period following completion of this CONTRACT, then this BOND is void; otherwise, it remains in full force.

The SURETY, for value received, hereby stipulates and agrees that no changes, extension of time, alterations, or additions to the terms of the CONTRACT, or other WORK to be performed hereunder or the SPECIFICATIONS referred to therein, shall in any way affect its obligation under this BOND, and it does hereby waive notice of any such changes, extensions of time, alterations, or additions to the terms of the CONTRACT or to WORK or to the SPECIFICATIONS.

In no event shall the SURETY be liable in the aggregate to Obligee for more than the penalty of its PERFORMANCE BOND regardless of the number of suits that may be filed by Obligee.

IN WITNESS WHEREOF, the above-bonded parties have executed this instrument under their several seals this ___ day of _____, 19__, the name and corporate seal of each corporate party being hereto affixed and these presents duly signed by its undersigned representative, pursuant to authority of its governing body.

ATTEST:

PRINCIPAL: _____
PRINTED NAME

_____
WITNESS

BY: _____(SEAL)
AUTHORIZED SIGNATURE
(PRINCIPAL)

_____
WITNESS

_____
PRINTED NAME

-OR-

ATTEST:

_____
WITNESS

BY: (SEAL)
AS ATTORNEY IN FACT
(ATTACH POWER)

_____
WITNESS

_____
PRINTED NAME

_____
BUSINESS ADDRESS

_____
BUSINESS TELEPHONE

STATE OF _____)
COUNTY OF _____)

I, the undersigned authority, hereby certify that on this ___day of _____, 19__, before me personally appeared _____ and _____ _____, to me known to be the person(s) described in and who executed the foregoing instrument, and acknowledged the execution thereof to be a free act and deed for the uses and purposes therein mentioned.

WITNESS my hand and official seal and the date aforesaid.

_____ (SEAL)
NOTARY PUBLIC

My Commission Expires:

ATTEST:

SURETY: _____
PRINTED NAME

_____
BUSINESS ADDRESS

_____

_____
WITNESS

BY: _____ (SEAL)
AUTHORIZED SIGNATURE

_____
WITNESS

_____
PRINTED NAME

SECTION 00620

CONSTRUCTION PAYMENT BOND

BY THIS BOND, We, _____, located at _____ (hereinafter called the "Principal") and _____ (hereinafter called the "SURETY"), located at _____, a SURETY insurer chartered and existing under the laws of the State of _____, and authorized to do business in the State of Florida, are held and firmly bound unto the Board of County Commissioners of Pasco County, Florida (hereinafter called the "Owner") in the sum of _____ and 00/100 Dollars ($) for payment of which we bind ourselves, our heirs, our personal representatives, our successors, and our assignees jointly and severally.

WHEREAS, the Principal and Owner have reached a mutual agreement (hereinafter referred to as the "CONTRACT") for the purpose of constructing Intermediate Cover for Cell A-1, West Pasco Landfill said CONTRACT and CONTRACT documents being made a part of this BOND by this reference.

NOW THEREFORE, THE CONDITION OF THIS BOND IS THAT IF THE PRINCIPAL:

1. Shall promptly make payments to all claimants as defined in Section 255.05(1), Florida Statutes, supplying the Principal with labor, MATERIALS, or supplies as used directly or indirectly by the Principal in the prosecution of the WORK provided for in the CONTRACT and CONTRACT documents.

2. Shall pay the Owner for all losses, damages, including any and all delay damages, expenses, costs, and attorney's fees, including those resulting from appellate proceedings that the Owner sustains because of a default by the Principal in contravention to the CONTRACT in regard to payment for such labor, MATERIALS, or supplies furnished to the Principal, then this BOND is void. Otherwise, this BOND remains in full force and effect.

BE IT FURTHER KNOWN:

1. Any changes in or under the CONTRACT and compliance or noncompliance with any formalities connected with the said CONTRACT or alterations which may be made in terms of the said CONTRACT, or in the WORK to be done under it, or the giving by the Owner of any extension of time for the performance of the said CONTRACT, or any other forbearance on the part of the Owner or Principal to the other, shall not in any way release the Principal or SURETY, or either of them, their heirs, their personal representatives, their successors, or their assigns from liability hereunder, notice to the SURETY of any such changes, alterations, extensions, or forbearance being hereby waived.

2. Certain claimants seeking the protection of this BOND must timely comply with the strict requirements set forth in Section 255.05, Florida Statutes, and as otherwise provided by law.

3. As concerns payment for labor, MATERIALS, and supplies, as affects certain claimants, no legal action shall be instituted against the Principal or SURETY on this BOND after one year from the performance of labor or the completion of delivery of the MATERIALS or supplies as is specifically mandated pursuant to Section 255.05, Florida Statutes.

THIS BOND DATED THIS ____ day of _____, 19__ (the date of issue by the SURETY or by the SURETY's agent and the date of such agent's Power of Attorney).

ATTEST:

PRINCIPAL: _____
PRINTED NAME

_____
WITNESS

BY: _____(SEAL)
AUTHORIZED SIGNATURE
(PRINCIPAL)

_____
WITNESS

_____
PRINTED NAME

_____
TITLE OF PERSON SIGNING ABOVE

-OR-

ATTEST:

_____
WITNESS

BY: _____(SEAL)
AS ATTORNEY IN FACT
(ATTACH POWER)

_____
WITNESS

_____
PRINTED NAME

_____
BUSINESS ADDRESS

_____
BUSINESS TELEPHONE

STATE OF _____)
COUNTY OF _____)

I, the undersigned authority, hereby certify that on this ___day of _____, 19__, before me personally appeared _____ and _____ to me known to be the person(s) described in and who executed the foregoing instrument, and acknowledge the execution thereof to be a free act and deed for the uses and purposes therein mentioned.

WITNESS my hand and official seal and the date aforesaid.

_____(SEAL)
NOTARY PUBLIC

My Commission Expires:

ATTEST:

SURETY: _____
PRINTED NAME

_____
BUSINESS ADDRESS

_____

_____
WITNESS

BY: _____(SEAL)
AUTHORIZED SIGNATURE

_____
WITNESS

_____
PRINTED NAME

-OR-

ATTEST:

_____
WITNESS

BY: _____(SEAL)
AS ATTORNEY IN FACT
(ATTACH POWER)

_____
WITNESS

_____
PRINTED NAME

_____
AGENT'S LICENSE NO.

_____
AGENCY NAME

_____
AGENCY MAILING ADDRESS

_____
AGENCY TELEPHONE NO.

_____
AGENCY FAX NO.

STATE OF _____)
COUNTY OF _____)

I, the undersigned authority, hereby certify that on this ___day of _____, 19__, before me personally appeared _____ and _____ _____, to me known to be the person(s) described in and who executed the foregoing instrument, and acknowledged the execution thereof to be a free act and deed for the uses and purposes therein mentioned.

WITNESS my hand and official seal and the date aforesaid.

_____(SEAL)
NOTARY PUBLIC

My Commission Expires:

GENERAL CONDITIONS

SECTION 00700

This document has important legal consequences: consultation with an attorney is encouraged with respect to its completion or modification.

STANDARD GENERAL CONDITIONS OF THE CONSTRUCTION CONTRACT

Prepared by

Engineers Joint Contract Documents Committee

and

Issued and Published Jointly By

PROFESSIONAL ENGINEERS IN PRIVATE PRACTICE
A practice division of the
NATIONAL SOCIETY OF PROFESSIONAL ENGINEERS

AMERICAN CONSULTING ENGINEERS COUNCIL

AMERICAN SOCIETY OF CIVIL ENGINEERS

CONSTRUCTION SPECIFICATIONS INSTITUTE

This document has been approved and endorsed by

The Associated General Contractors of America

These General Conditions have been prepared for use with the Owner-Contractor Agreements (No. 1910-A-1 or 1910-8-A-2) (1990 Editions). Their provisions are interrelated and a change in one may necessitate a change in the others. Comments concerning their usage are contained in the Commentary on Agreements for Engineering Services and Contract Documents (No. 1910-9) (1986 Edition). For guidance in the preparation of Supplementary Conditions, see Guide to the Preparation of Supplementary Conditions (No. 1910-17) (1990 Edition). When bidding is involved, the Standard Form of Instructions to Bidders (No. 1910-12) (1990 Edition) may be used.

© 1990 National Society of Professional Engineers
1420 King Street, Alexandria, VA 22314

American Consulting Engineers Council
1015 15th Street, N.W., Washington, DC 20005

American Society of Civil Engineers
345 East 47th Street, New York, NY 10017

Construction Specifications Institute
601 Madison St., Alexandria, VA 22314

TABLE OF CONTENTS OF GENERAL CONDITIONS

Article or Paragraph Number & Title		*Page Number*
1. DEFINITIONS		13
1.1	Addenda	13
1.2	Agreement	13
1.3	Application for Payment	13
1.4	Asbestos	13
1.5	Bid	13
1.6	Bidding Documents	13
1.7	Bidding Requirements	13
1.8	Bonds	13
1.9	Change Order	13
1.10	Contract Documents	13
1.11	Contract Price	13
1.12	Contract Times	13
1.13	CONTRACTOR	13
1.14	*defective*	13
1.15	Drawings	13
1.16	Effective Date of the Agreement	13
1.17	ENGINEER	13
1.18	ENGINEER's Consultant	13
1.19	Field Order	13
1.20	General Requirements	14
1.21	Hazardous Waste	14
1.22	Laws and Regulations; Laws or Regulations	14
1.23	Liens	14
1.24	Milestone	14
1.25	Notice of Award	14
1.26	Notice to Proceed	14
1.27	OWNER	14
1.28	Partial Utilization	14
1.29	PCBs	14
1.30	Petroleum	14
1.31	Project	14
1.32	Radioactive Material	14
1.33	Resident Project Representative	14
1.34	Samples	14
1.35	Shop Drawings	14
1.36	Specifications	14
1.37	Subcontractor	14
1.38	Substantial Completion	14
1.39	Supplementary Conditions	14
1.40	Supplier	14
1.41	Underground Facilities	14
1.42	Unit Price Work	14
1.43	Work	15
1.44	Work Change Directive	15
1.45	Written Amendment	15
2. PRELIMINARY MATTERS		15
2.1	Delivery of Bonds	15
2.2	Copies of Documents	15
2.3	Commencement of Contract Times; Notice to Proceed	15
2.4	Starting the Work	15
2.5-2.7	Before Starting Construction: CONTRACTOR's Responsibility to Report: Preliminary Schedules: Delivery of Certificates of Insurance	15
2.8	Preconstruction Conference	15
2.9	Initially Acceptable Schedules	16
3. CONTRACT DOCUMENTS: INTENT, AMENDING, REUSE		16
3.1-3.2	Intent	16
3.3	Reference to Standards and Specifications of Technical Societies; Reporting and Resolving Discrepancies	16
3.4	Intent of Certain Terms or Adjectives	17
3.5	Amending Contract Documents	17
3.6	Supplementing Contract Documents	17
3.7	Reuse of Documents	17
4. AVAILABILITY OF LANDS: SUBSURFACE AND PHYSICAL CONDITIONS; REFERENCE POINTS		17
4.1	Availability of Lands	17
4.2	Subsurface and Physical Conditions	17
4.2.1	Reports and Drawings	17
4.2.2	Limited Reliance by CONTRACTOR Authorized; Technical Data	18
4.2.3	Notice of Differing Subsurface or Physical Conditions	18
4.2.4	ENGINEER's Review	18
4.2.5	Possible Contract Documents Change	18
4.2.6	Possible Price and Times Adjustments	18
4.3	Physical Conditions—Underground Facilities	18
4.3.1	Shown or Indicated	18
4.3.2	Not Shown or Indicated	19
4.4	Reference Points	19
4.5	Asbestos, PCBs, Petroleum, Hazardous Waste or Radioactive Material	19
5. BONDS AND INSURANCE		20
5.1-5.2	Performance, Payment and Other Bonds	20
5.3	Licensed Sureties and Insurers; Certificates of Insurance	20
5.4	CONTRACTOR's Liability Insurance	20
5.5	OWNER's Liability Insurance	21
5.6	Property Insurance	21
5.7	Boiler and Machinery or Additional Property Insurance	21
5.8	Notice of Cancellation Provisions	21
5.9	CONTRACTOR's Responsibility for Deductible Amounts	22
5.10	Other Special Insurance	22
5.11	Waiver of Rights	22

Article or Paragraph Number & Title		Page Number
5.12-5.13	Receipt and Application of Insurance Proceeds	22
5.14	Acceptance of Bonds and Insurance; Option to Replace	22
5.15	Partial Utilization—Property Insurance	23
6. CONTRACTOR'S RESPONSIBILITIES		23
6.1-6.2	Supervision and Superintendence	23
6.3-6.5	Labor, Materials and Equipment	23
6.6	Progress Schedule	23
6.7	Substitutes and "Or-Equal" Items; CONTRACTOR's Expense; Substitute Construction Methods or Procedures; ENGINEER's Evaluation	23
6.8-6.11	Concerning Subcontractors, Suppliers and Others; Waiver of Rights	24
6.12	Patent Fees and Royalties	25
6.13	Permits	25
6.14	Laws and Regulations	25
6.15	Taxes	25
6.16	Use of Premises	26
6.17	Site Cleanliness	26
6.18	Safe Structural Loading	26
6.19	Record Documents	26
6.20	Safety and Protection	26
6.21	Safety Representative	26
6.22	Hazard Communication Programs	27
6.23	Emergencies	27
6.24	Shop Drawings and Samples	27
6.25	Submittal Procedures; CONTRACTOR's Review Prior to Shop Drawing or Sample Submittal	27
6.26	Shop Drawing & Sample Submittals Review by ENGINEER	27
6.27	Responsibility for Variation From Contract Documents	27
6.28	Related Work Performed Prior to ENGINEER's Review and Approval of Required Submittals	27
6.29	Continuing the Work	28
6.30	CONTRACTOR's General Warranty and Guarantee	28
6.31-6.33	Indemnification	28
6.34	Survival of Obligations	28
7. OTHER WORK		29
7.1-7.3	Related Work at Site	29
7.4	Coordination	
8. OWNER'S RESPONSIBILITIES		29
8.1	Communications to Contractor	29
8.2	Replacement of ENGINEER	29
8.3	Furnish Data and Pay Promptly When Due	29
8.4	Lands and Easements; Reports and Tests	29
8.5	Insurance	29
8.6	Change Orders	29
8.7	Inspections, Tests and Approvals	29
8.8	Stop or Suspend Work; Terminate CONTRACTOR's Services	29
8.9	Limitations on OWNER's Responsibilities	30
8.10	Asbestos, PCBs, Petroleum, Hazardous Waste or Radioactive Material	30
8.11	Evidence of Financial Arrangements	30
9. ENGINEER'S STATUS DURING CONSTRUCTION		30
9.1	OWNER's Representative	30
9.2	Visits to Site	30
9.3	Project Representative	30
9.4	Clarifications and Interpretations	30
9.5	Authorized Variations in Work	30
9.6	Rejecting Defective Work	30
9.7-9.9	Shop Drawings, Change Orders and Payments	31
9.10	Determinations for Unit Prices	31
9.11-9.12	Decisions on Disputes; ENGINEER as Initial Interpreter	31
9.13	Limitations on ENGINEER's Authority and Responsibilities	31
10. CHANGES IN THE WORK		32
10.1	OWNER Ordered Change	32
10.2	Claim for Adjustment	32
10.3	Work Not Required by Contract Documents	32
10.4	Change Orders	
10.5	Notification of Surety	32
11. CHANGE OF CONTRACT PRICE		32
11.1-11.3	Contract Price; Claim for Adjustment; Value of the Work	32
11.4	Cost of the Work	33
11.5	Exclusions to Cost of the Work	34
11.6	CONTRACTOR's Fee	34
11.7	Cost Records	34
11.8	Cash Allowances	35
11.9	Unit Price Work	35
12. CHANGE OF CONTRACT TIMES		35
12.1	Claim for Adjustment	35
12.2	Time of the Essence	35
12.3	Delays Beyond CONTRACTOR's Control	35
12.4	Delays Beyond OWNER's and CONTRACTOR's Control	35
13. TESTS AND INSPECTIONS; CORRECTION, REMOVAL OR ACCEPTANCE OF DEFECTIVE WORK		36
13.1	Notice of Defects	36
13.2	Access to the Work	36
13.3	Tests and Inspections; Contractor's Cooperation	36

Article or Paragraph Number & Title		Page Number
13.4	OWNER's Responsibilities: Independent Testing Laboratory	36
13.5	CONTRACTOR's Responsibilities	36
13.6-13.7	CoveringWork Prior to Inspection, Testing or Approval	36
13.8-13.9	Uncovering Work at ENGINEER's Request	36
13.10	OWNER May Stop the Work	36
13.11	Correction or Removal of Defective Work	37
13.12	Correction Period	
13.13	Acceptance of Defective Work	37
13.14	OWNER May Correct Defective Work	37
14. PAYMENTS TO CONTRACTOR AND COMPLETION		37
14.1	Schedule of Values	37
14.2	Application for Progress Payment	38
14.3	CONTRACTOR's Warranty of Title	38
14.4-14.7	Review of Applications for Progress Payments	38
14.8-14.9	Substantial Completion	39
14.10	Partial Utilization	39
14.11	Final Inspection	39
14.12	Final Application for Payment	40
14.13-14.14	Final Payment and Acceptance	40
14.15	Waiver of Claims	40
15. SUSPENSION OF WORK AND TERMINATION		40
15.1	OWNER May Suspend Work	40
15.2-15.4	OWNER May Terminate	40
15.5	CONTRACTOR May Stop Work or Terminate	41
16. DISPUTE RESOLUTION		41
17. MISCELLANEOUS		42
17.1	Giving Notice	42
17.2	Computation of Times	42
17.3	Notice of Claim	42
17.4	Cumulative Remedies	42
17.5	Professional Fees and Court Costs Included	42
EXHIBIT GC-A (Optional):		
Dispute Resolution Agreement (Optional)		GC-A1
16.1-16.6	Arbitration	GC-A1
16.7	Mediation	GC-A2

INDEX TO GENERAL CONDITIONS

Article or Paragraph Number

Acceptance of—
- Bonds and Insurance 5.14
- *defective* Work 10.4.1, 13.13, 13.15
- final payment 9.12, 14.15
- insurance 5.14
- other Work, by CONTRACTOR 7.3
- Substitutes and "Or-Equal" Items 6.7.1
- Work by OWNER 2.5, 6.30, 6.34

Access to the—
- Lands, OWNER and CONTRACTOR responsibilities 4.1
- site, related work 7.2
- Work, ... 13.2, 13.14, 14.9

Acts or Omissions—, Acts and Omissions—
- CONTRACTOR 6.9.1, 9.13.3
- ENGINEER 6.20, 9.13.3
- OWNER 6.20, 8.9

Addenda—definition of (also see definition of Specifications) ..... (1.6, 1.10, 6.19) 1.1

Additional Property Insurances 5.7

Adjustments
- Contract Price or Contract Times 1.5, 3.5, 4.1, 4.3.2, 4.5.2, 4.5.3, 9.4, 9.5, 10.2-10.4, 11, 12, 14.8, 15.1
- progress schedule 6.6

Agreement—
- definition of 1.2

All risk Insurance, policy form 5.6.2

Allowances, Cash 11.8

Amending Contract Documents 3.5

Amendment, Written—
- in general 1.10, 1.45, 3.5, 5.10, 5.12, 6.6.2, 6.8.2, 6.19, 10.1, 10.4, 11.2, 12.1, 13.12.2, 14.7.2

Appeal, OWNER or CONTRACTOR
- intent to 9.10, 9.11, 10.4, 16.2, 16.5

Application for Payment—
- definition of 1.3
- ENGINEER's Responsibility 9.9
- final payment 9.13.4, 9.13.5, 14.12-14.15
- in general 2.8, 2.9, 5.6.4, 9.10, 15.5
- progress payment 14.1, 14.7
- review of 14.4-14.7

Arbitration (Optional) 16.1-16.6

Asbestos—
- claims pursuant thereto 4.5.2, 4.5.3
- CONTRACTOR authorized to stop Work 4.5.2
- definition of 1.4
- OWNER responsibility for 4.5.1, 8.10
- possible price and times change 4.5.2

Authorized Variations in Work 3.6, 6.25, 6.27, 9.5

Availability of Lands 4.1, 8.4

Award, Notice of—defined 1.25

Before Starting Construction 2.5-2.8

Bid—definition of 1.5
(1.1, 1.10, 2.3, 3.3, 4.2.6.4, 6.13, 11.4.3, 11.9.1)

Article or Paragraph Number

Bidding Documents—definition of 1.6 (6.8.2)

Bidding Requirements—definitions of 1.7 (1.1, 4.2.6.2)

Bonds—
- acceptance of 5.14
- additional bonds 10.5, 11.4.5.9
- Cost of the Work 11.5.4
- definition of 1.8
- delivery of 2.1, 5.1
- final application for payment 14.12-14.14
- general 1.10, 5.1-5.3, 5.13, 9.13.10.5, 14.7.6
- performance, Payment and Other 5.1-5.2

Bonds and Insurance—in general 5

Builder's risk "all risk" policy form 5.6.2

Cancellation Provisions, Insurance 5.4.11., 5.8, 5.15

Cash Allowances 11.8

Certificate of Substantial Completion 1.38, 6.30.2.3, 14.8, 14.10

Certificates of Inspection 9.13.4, 13.5, 14.12

Certificates of Insurance .. 2.7, 5.3, 5.4.11, 5.4.13, 5.6.5, 5.8, ... 5.14, 9.13.4, 14.12

Change in Contract Price—
- Cash Allowances 11.8
- claim for price adjustment 4.1, 4.2.6, 4.5, 5.15, 6.8.2, 9.4, 9.5, 9.11, 10.2, 10.5, 11.2, 13.9, 13.13, 13.14, 15.1, 15.5
- CONTRACTOR's fee 11.6
- Cost of the Work general 11.4-11.7
- Exclusions to 11.5
- Cost Records 11.7
- in general 1.19, 1.44, 9.11, 10.4.2, 10.4.3, 11
- Lump Sum Pricing 11.3.2
- Notification of Surety 10.5
- Scope of 10.3-10.4
- Testing and Inspection, Uncovering the Work 13.9
- Unit Price Work 11.9
- Value of Work 11.3

Change in Contract Times—
- Claim for times adjustment 4.1, 4.2.6, 4.5, 5.15, 6.8.2, 9.4, 9.5, 9.11, 10.2, 10.5, 12.1, 13.9, 13.13, 13.14, 14.7, 15.1, 15.5
- Contractual time limits 12.2
- Delays beyond CONTRACTOR's control 12.3
- Delays beyond OWNER's and CONTRACTOR's control 12.4
- Notification of surety 10.5
- Scope of change 10.3-10.4

Change Orders—
- Acceptance of Defective Work 13.13
- Amending Contract Documents 3.5
- Cash Allowances 11.8
- Change of Contract Price 11
- Change of Contract Times 12
- Changes in the Work 10
- CONTRACTOR's fee 11.6
- Cost of the Work 11.4-11.7

Article or Paragraph Number

Cost Records 11.7
definition of 1.9
emergencies 6.23
ENGINEER's responsibility 9.8, 10.4, 11.2, 12.1
execution of 10.4
Indemnification 6.12, 6.16, 6.31, 6.33
Insurance, Bonds and 5.10, 5.13, 10.5
OWNER may terminate 15.2-15.4
OWNER's Responsibility 8.6, 10.4
Physical Conditions—
Subsurface and, ... 4.2
Underground Facilities 4.3.2
Record Documents 6.19
Scope of Change 10.3-10.4
Substitutes 6.7.3, 6.8.2
Unit Price Work 11.9
value of Work, covered by 11.3
Changes in the Work 10
Notification of surety 10.5
OWNER's and CONTRACTOR's responsibilities 10.4
Right to an adjustment 10.2
Scope of change 10.3-10.4
Claims—
against CONTRACTOR 6.16
against ENGINEER 6.32
against OWNER 6.32
Change of Contract Price 9.4, 11.2
Change of Contract Times 9.4, 12.1
CONTRACTOR's 4, 7.1, 9.4, 9.5, 9.11, 10.2, 11.2, 11.9, 12.1, 14.8, 15.1, 15.5, 17.3
CONTRACTOR's Fee 11.6
CONTRACTOR's liability 5.4, 6.12, 6.16, 6.31
Cost of the Work 11.4, 11.5
Decisions on Disputes 9.11, 9.12
Dispute Resolution 16.1
Dispute Resolution Agreement 16.1-16.6
ENGINEER as initial interpretor 9.11
Lump Sum Pricing 11.3.2
Notice of 17.3
OWNER's 9.4, 9.5, 9.11, 10.2, 11.2, 11.9, 12.1, 13.9, 13.13, 13.14, 17.3
OWNER's liability 5.5
OWNER may refuse to make payment 14.7
Professional Fees and Court Costs Included 17.5
request for formal decision on 9.11
Substitute items 6.7.1.2
Time Extension 12.1
Time requirements 9.11, 12.1
Unit Price Work 11.9.3
Value of 11.3
Waiver of—on Final Payment 14.14, 14.15
Work Change Directive 10.2
written notice required 9.11, 11.2, 12.1
Clarifications and Interpretations 3.6.3, 9.4, 9.11
Clean Site 6.17
Codes of Technical Society, Organization or Association 3.3.3
Commencement of Contract Times 2.3
Communications—
general 6.2, 6.9.2, 8.1
Hazard Communication Programs 6.22
Completion—
Final Application for Payment 14.12
Final Inspection 14.11
Final Payment and Acceptance 14.13-14.14
Partial Utilization 14.10
Substantial Completion 1.38, 14.8-14.9
Waiver of Claims 14.15
Computation of Times 17.2.1-17.2.2
Concerning Subcontractors, Suppliers and Others 6.8-6.11
Conferences—
initially acceptable schedules 2.9
preconstruction 2.8
Conflict, Error, Ambiguity, Discrepancy—
CONTRACTOR to Report 2.5, 3.3.2
Construction, before starting by CONTRACTOR 2.5-2.7
Construction Machinery, Equipment, etc. 6.4
Continuing the Work 6.29, 10.4
Contract Documents—
Amending 3.5
Bonds 5.1
Cash Allowances 11.8
Change of Contract Price 11
Change of Contract Times 12
Changes in the Work 10.4-10.5
check and verify 2.5
Clarifications and Interpretations 3.2, 3.6, 9.4, 9.11
definition of 1.10
ENGINEER as initial interpreter of 9.11
ENGINEER as OWNER's representative 9.1
general 3
Insurance 5.3
Intent 3.1-3.4
minor variations in the Work 3.6
OWNER's responsibility to furnish data 8.3
OWNER's responsibility to make prompt payment 8.3, 14.4, 14.13
precedence 3.1, 3.3.3
Record Documents 6.19
Reference to Standards and Specifications of Technical Societies 3.3
Related Work 7.2
Reporting and Resolving Discrepancies 2.5, 3.3
Reuse of 3.7
Supplementing 3.6
Termination of ENGINEER's Employment 8.2
Unit Price Work 11.9
variations 3.6, 6.23, 6.27
Visits to Site, ENGINEER's 9.2
Contract Price—
adjustment of 3.5, 4.1, 9.4, 10.3, 11.2-11.3
Change of 11
Decision on Disputes 9.11
definition of 1.11
Contract Times—
adjustment of 3.5, 4.1, 9.4, 10.3, 12
Change of 12.1-12.4

Article or Paragraph Number

Commencement of 2.3
definition of 1.12
CONTRACTOR—
Acceptance of Insurance 5.14
Limited Reliance on Technical Data Authorized 4.2.2
Communications 6.2, 6.9.2
Continue Work 6.29, 10.4
coordination and scheduling 6.9.2
definition of 1.13
May Stop Work or Terminate 15.5
provide site access to others 7.2, 13.2
Safety and Protection 4.3.1.2, 6.16, 6.18, 6.21-6.23, 7.2, 13.2
Shop Drawing and Sample Review Prior to Submittal . 6.25
Stop Work requirements 4.5.2
CONTRACTOR's—
Compensation 11.1-11.2
Continuing Obligation 14.15
Defective Work 9.6, 13.10-13.14
Duty to correct defective Work 13.11
Duty to Report—
Changes in the Work caused by 6.23
Emergency 7.3
Defects in Work of Others 4.2.3
Differing conditions 2.5, 3.3.2, 6.14.2
Discrepancy in Documents 4.3.2
Underground Facilities not indicated 6.23
Emergencies .....
Equipment and Machinery Rental, Cost of the Work 11.4.5.3
Fee—Cost-Plus 11.4.5.6, 11.5.1, 11.6
General Warranty and Guarantee 6.30
Hazard Communication Programs 6.22
Indemnification 6.12, 6.16, 6.31-6.33
Inspection of the Work 7.3, 13.4,
Labor, Materials and Equipment 6.3-6.5
Laws and Regulations, Compliance by 6.14.1
Liability Insurance 5.4
Notice of Intent to Appeal 9.10, 10.4
obligation to perform and complete the Work 6.30
Patent Fees and Royalties, paid for by 6.12
Performance and Other Bonds 5.1
Permits, obtained and paid for by 6.13
Progress Schedule 2.6, 2.8, 2.9, 6.6, 6.29, 10.4, 15.2.1
Request for formal decision on disputes 9.11
Responsibilities—
Changes in the Work 10.1
Concerning Subcontractors, Suppliers and Others . 6.8-6.11
Continuing the Work 6.29, 10.4
CONTRACTOR's expense 6.7.1
CONTRACTOR's General Warranty and Guarantee 6.30
CONTRACTOR's review prior to Shop Drawing or Sample submittal 6.25
Coordination of Work 6.9.2
Emergencies 6.23
ENGINEER's evaluation, Substitutes or "Or-Equal" Items 6.7.3

Article or Paragraph Number

For Acts and Omissions of Others 6.9.1-6.9.2, 9.13
for deductible amounts, insurance 5.9
general 6, 7.2, 7.3, 8.9
Hazardous Communication Programs 6.22
Indemnification 6.31-6.33
Labor, Materials and Equipment 6.3-6.5
Laws and Regulations 6.14
Liability Insurance 5.4
Notice of variation from Contract Documents 6.27
Patent Fees and Royalties 6.12
Permits 6.13
Progress Schedule 6.6
Record Documents 6.19
related Work performed prior to ENGINEER's approval of required submittals 6.28
safe structural loading 6.18
Safety and Protection 6.20, 7.2, 13.2
Safety Representative 6.21
Scheduling the Work 6.9.2
Shop Drawings and Samples 6.24
Shop Drawings and Samples Review by ENGINEER 6.26
Site Cleanliness 6.17
Submittal Procedures 6.25
Substitute Construction Methods and Procedures 6.7.2
Substitutes and "Or-Equal" Items 6.7.1
Superintendence 6.2
Supervision 6.1
Survival of Obligations 6.34
Taxes 6.15
Tests and Inspections 13.5
To Report 2.5
Use of Premises 6.16-6.18, 6.30.2.4
Review Prior to Shop Drawing or Sample Submittal .. 6.25
Right to adjustment for changes in the Work 10.2
right to claim .. 4, 7.1, 9.4, 9.5, 9.11, 10.2, 11.2, 11.9, 12.1, 13.9, 14.8, 15.1, 15.5, 17.3
Safety and Protection 6.20-6.22, 7.2, 13.2
Safety Representative 6.21
Shop Drawings and Samples Submittals 6.24-6.28
Special Consultants 11.4.4
Substitute Construction Methods and Procedures 6.7
Substitutes and "Or-Equal" Items, Expense .. 6.7.1, 6.7.2
Subcontractors, Suppliers and Others 6.8-6.11
Supervision and Superintendence 6.1, 6.2, 6.21
Taxes, Payment by 6.15
Use of Premises 6.16-6.18
Warranties and guarantees 6.30, 6.5
Warranty of Title 14.3
Written Notice Required—
CONTRACTOR stop Work or terminate 15.5
Reports of Differing Subsurface and Physical Conditions 4.2.3
Substantial Completion 14.8
CONTRACTORS—other 7
Contractual Liability Insurance 5.4.10
Contractual Time Limits 12.2
Coordination

Article or Paragraph Number

CONTRACTOR's responsibility 6.9.2
Copies of Documents 2.2
Correction Period 13.12
Correction, Removal or Acceptance of Defective Work
in general 10.4.1, 13.10-13.14
Acceptance of Defective Work 13.13
Correction or Removal of Defective Work 6.30, 13.11
Correction Period 13.12
OWNER May Correct Defective Work 13.14
OWNER May Stop Work 13.10
Cost—
of Tests and Inspections 13.4
Records 11.7
Cost of the Work—
Bonds and insurance, additional 11.4.5.9
Cash Discounts 11.4.2
CONTRACTOR's Fee 11.6
Employee Expenses 11.4.5.1
Exclusions to 11.5
General 11.4-11.5
Home office and overhead expenses 11.5
Losses and damages 11.4.5.6
Materials and equipment 11.4.2
Minor expenses 11.4.5.8
Payroll costs on changes 11.4.1
performed by Subcontractors 11.4.3
Records 11.7
Rentals of construction equipment and machinery . 11.4.5.3
Royalty payments, permits and license fees 11.4.5.5
Site office and temporary facilities 11.4.5.2
Special Consultants, CONTRACTOR's 11.4.4
Supplemental 11.4.5
Taxes related to the Work 11.4.5.4
Tests and Inspection 13.4
Trade Discounts 11.4.2
Utilities, fuel and sanitary facilities 11.4.5.7
Work after regular hours 11.4.1
Covering Work 13.6-13.7
Cumulative Remedies 17.4-17.5
Cutting, fitting and patching 7.2
Data, to be furnished by OWNER 8.3
Day—definition of 17.2.2
Decisions on Disputes 9.11, 9.12
defective—definition of 1.14
defective Work—
Acceptance of 10.4.1, 13.13
Correction or Removal of 10.4.1, 13.11
Correction Period 13.12
in general 13, 14.7, 14.11
Observation by ENGINEER 9.2
OWNER May Stop Work 13.10
Prompt Notice of Defects 13.1
Rejecting 9.6
Uncovering the Work 13.8
Definitions 1
Delays 4.1, 6.29, 12.3-12.4
Delivery of Bonds 2.1
Delivery of certificates of insurance 2.7

Article or Paragraph Number

Determinations for Unit Prices 9.10
Differing Subsurface or Physical Conditions
Notice of 4.2.3
ENGINEER's Review 4.2.4
Possible Contract Documents Change 4.2.5
Possible Price and Times Adjustments 4.2.6
Discrepancies-Reporting and Resolving 2.5, 3.3.2, 6.14.2
Dispute Resolution—
Agreement 16.1-16.6
Arbitration 16.1-16.5
general 16
Mediation 16.6
Dispute Resolution Agreement 16.1-16.6
Disputes, Decisions by ENGINEER 9.11-9.12
Documents—
Copies of 2.2
Record 6.19
Reuse of 3.7
Drawings—definition of 1.15
Easements 4.1
Effective date of Agreement—definition of 1.16
Emergencies 6.23
ENGINEER—
as initial interpreter on disputes 9.11-9.12
definition of 1.17
Limitations on authority and responsibilities 9.13
Replacement of 8.2
Resident Project Representative 9.3
ENGINEER's Consultant—definition of 1.18
ENGINEER's—
authority and responsibility, limitations on 9.13
Authorized Variations in the Work 9.5
Change Orders, responsibility for 9.7, 10, 11, 12
Clarifications and Interpretations 3.6.3, 9.4
Decisions on Disputes 9.11-9.12
defective Work, notice of 13.1
Evaluation of Substitute Items 6.7.3
Liability 6.32, 9.12
Notice Work is Acceptable 14.13
Observations 6.30.2, 9.2
OWNER's Representative 9.1
Payments to the CONTRACTOR, Responsibility for 9.9, 14
Recommendation of Payment 14.4, 14.13
Responsibilities—
Limitations on 9.11-9.13
Review of Reports on Differing Subsurface and Physical Conditions 4.2.4
Shop Drawings and Samples, review responsibility 6.26
Status During Construction—
authorized variations in the Work 9.5
Clarifications and Interpretations 9.4
Decisions on Disputes 9.11-9.12
Determinations on Unit Price 9.10
ENGINEER as Initial Interpreter 9.11-9.12
ENGINEER's Responsibilities 9.1-9.12

Article or Paragraph Number

Lir .tations on ENGINEER's Authority and Responsibilities 9.13
OWNER's Representative 9.1
Project Representative 9.3
Rejecting Defective Work 9.6
Shop Drawings, Change Orders and Payments 9.7-9.9
Visits to Site 9.2
Unit Price Determinations 9.10
Visits to Site 9.2
Written consent required 7.2, 9.1
Equipment, Labor, Materials and 6.3-6.5
Equipment rental, Cost of the Work 11.4.5.3
Equivalent Materials and Equipment 6.7
Errors or omissions 6.33
Evidence of Financial Arrangements 8.11
Explorations of physical conditions 4.2.1
Fee, CONTRACTOR's—Costs-Plus 11.6
Field Order—
definition of 1.19
issued by ENGINEER 3.6.1, 9.5
Final Application for Payment 14.12
Final Inspection 14.11
Final Payment—
and Acceptance 14.13-14.14
Prior to, for cash allowances 11.8
General Provisions 17.3-17.4
General Requirements—
defintion of 1.20
principal references to 2.6, 6.4, 6.6-6.7, 6.24
Giving Notice 17.1
Guarantee of Work—by CONTRACTOR 6.30, 14.12
Hazard Communication Programs 6.22
Hazardous Waste—
definition of 1.21
general 4.5
OWNER's responsibility for 8.10
Indemnification 6.12, 6.16, 6.31-6.33
Initially Acceptable Schedules 2.9
Inspection—
Certificates of 9.13.4, 13.5, 14.12
Final 14.11
Special, required by ENGINEER 9.6
Tests and Approval 8.7, 13.3-13.4
Insurance—
Acceptance of, by OWNER 5.14
Additional, required by changes in the Work 11.4.5.9
Before starting the Work 2.7
Bonds and—in general 5
Cancellation Provisions 5.8
Certificates of .. 2.7, 5, 5.3, 5.4.11, 5.4.13, 5.6.5, 5.8, 5.14, 9.13.4, 14.12
completed operations 5.4.13
CONTRACTOR's Liability 5.4
CONTRACTOR's objection to coverage 5.14
Contractual Liability 5.4.10

Article or Paragraph Number

deductible amounts, CONTRACTOR's responsibility 5.9
Final Application for Payment 14.12
Licensed Insurers 5.3
Notice requirements, material changes 5.8, 10.5O
Option to Replace 5.14
other special insurances 5.10
OWNER as fiduciary for insureds 5.12-5.13
OWNER's Liability 5.5
OWNER's Responsibility 8.5
Partial Utilization, Property Insurance 5.15
Property 5.6-5.10
Receipt and Application of Insurance Proceeds .. 5.12-5.13
Special Insurance 5.10
Waiver of Rights 5.11
Intent of Contract Documents 3.1-3.4
Interpretations and Clarifications 3.6.3, 9.4
Investigations of physical conditions 4.2
Labor, Materials and Equipment 6.3-6.5
Lands—
and Easements 8.4
Availability of 4.1, 8.4
Reports & Tests 8.4
Laws and Regulations—Laws or Regulations—
Bonds 5.1-5.2
Changes in the Work 10.4
Contract Documents 3.1
CONTRACTOR's Responsibilities 6.14
Correction Period, defective Work 13.12
Cost of the Work, taxes 11.4.5.4
definition of 1.22
general 6.14
Indemnification 6.31-6.33
Insurance 5.3
Precedence 3.1, 3.3.3
Reference to 3.3.1
Safety and Protection 6.20, 13.2
Subcontractors, Suppliers and Others 6.8-6.11
Tests and Inspections 13.5
Use of Premises 6.16
Visits to Site 9.2
Liability Insurance—
CONTRACTOR's 5.4
OWNER's 5.5
Licensed Sureties and Insurers 5.3
Liens—
Application for Progress Payment 14.2
Contractor's Warranty of Title 14.3
Final Application for Payment 14.12
definition of 1.23
Waiver of Claims 14.15
Limitations on ENGINEER's authority and responsibilities 9.13
Limited Reliance by CONTRACTOR Authorized 4.2.2
Maintenance and Operating Manuals—
Final Application for Payment 14.12
Manuals (of others)—
Precedence 3.3.3.1

Article or Paragraph Number

Reference to in Contract Documents 3.3.1
Materials and equipment—
furnished by CONTRACTOR 6.3
not incorporated in Work 14.2
Materials or equipment—equivalent 6.7
Mediation (Optional) 16.7
Milestones—definition of 1.24
Miscellaneous—
Computation of Times 17.2
Cumulative Remedies 17.4
Giving Notice 17.1
Notice of Claim 17.3
Professional Fees and Court Costs Included 17.5
Multi-prime contracts 7
Not Shown or Indicated 4.3.2
Notice of—
Acceptability of Project 14.13
Award, definition of 1.25
Claim 17.3
Defects. 13.1
Differing Subsurface or Physical Conditions 4.2.3
Giving 17.1
Tests and Inspections 13.3
Variation, Shop Drawing and Sample 6.27
Notice to Proceed—
definition of 1.26
giving of 2.3
Notification to Surety 10.5
Observations, by ENGINEER 6.30, 9.2
Occupancy of the Work 5.15, 6.30.2.4, 14.10
Omissions or acts by CONTRACTOR 6.9, 9.13
"Open peril" policy form, Insurance 5.6.2
Option to Replace 5.14
"Or Equal" Items 6.7
Other work 7
Overtime Work—prohibition of 6.3
OWNER—
Acceptance of defective Work 13.13
appoint an ENGINEER 8.2
as fiduciary 5.12-5.13
Availability of Lands, responsibility 4.1
definition of 1.27
data, furnish 8.3
May Correct Defective Work 13.14
May refuse to make payment 14.7
May Stop the Work 13.10
may suspend work,
terminate 8.8, 13.10, 15.1-15.4
Payment, make prompt 8.3, 14.4, 14.13
performance of other Work 7.1
permits and licenses, requirements 6.13
purchased insurance requirements 5.6-5.10
OWNER's—
Acceptance of the Work 6.30.2.5
Change Orders, obligation to
execute 8.6, 10.4
Communications 8.1
Coordination of the Work 7.4
Disputes, request for decision 9.11

Article or Paragraph Number

Inspections, tests and approvals 8.7, 13.4
Liability Insurance 5.5
Notice of Defects 13.1
Representative—During Construction,
ENGINEER's Status 9.1
Responsibilities—
Asbestos, PCB's, Petroleum, Hazardous
Waste on Radioactive Material 8.10
Change Orders 8.6
Changes in the Work 10.1
communications 8.1
CONTRACTOR's responsibilities 8.9
evidence of financial arrangements 8.11
inspections, tests and approvals 8.7
Insurance 8.5
lands and easements 8.4
prompt payment by 8.3
replacement of ENGINEER 8.2
reports and tests 8.4
stop or suspend Work 8.8, 13.10, 15.1
terminate CONTRACTOR's services 8.8, 15.2
separate representative at site 9.3
independent testing 13.4
use or occupancy of the
Work 5.15, 14.10
written consent or approval
required 9.1, 6.3, 11.4
written notice
required 7.1, 9.4, 9.11, 11.2, 11.9, 14.7, 15.4
PCBs—
definition of 1.29
general 4.5
OWNER's responsibility for 8.10
Partial Utilization—
definition of 1.28
general 6.30.2.4, 14.10
Property Insurance 5.15
Patent Fees and Royalties 6.12
Payment Bonds 5.1-5.2
Payments, Recommendation of 14.4-14.7, 14.13
Payments to CONTRACTOR and Completion—
Application for Progress Payments 14.2
CONTRACTOR's Warranty of Title 14.3
Final Application for Payment 14.12
Final Inspection 14.11
Final Payment and Acceptance 14.13-14.14
general 8.3, 14
Partial Utilization 14.10
Retainage 14.2
Review of Applications for Progress
Payments 14.4-14.7
prompt payment 8.3
Schedule of Values 14.1
Substantial Completion 14.8-14.9
Waiver of Claims 14.15
when payments due 14.4, 14.13
withholding payment 14.7
Performance Bonds 5.1-5.2
Permits 6.13

Article or Paragraph Number

Petroleum—
definition of 1.30
general 4.5
OWNER's responsibility for 8.10
Physical Conditions—
Drawings of, in or relating to 4.2.1.2
ENGINEER's review 4.2.4
existing structures 4.2.2
general 4.2.1.2
Subsurface and 4.2
Underground Facilities 4.3
Possible Contract Documents Change 4.2.5
Possible Price and Times Adjustments 4.2.6
Reports and Drawings 4.2.1
Notice of Differing Subsurface or 4.2.3
Subsurface and 4.2
Subsurface Conditions 4.2.1.1
Technical Data, Limited Reliance by CONTRACTOR Authorized 4.2.2
Underground Facilities—
general 4.3
Not Shown or Indicated 4.3.2
Protection of 4.3, 6.20
Shown or Indicated 4.3.1
Technical Data 4.2.2
Preconstruction Conference 2.8
Preliminary Matters 2
Preliminary Schedules 2.6
Premises, Use of 6.16-6.18
Price, Change of Contract 11
Price, Contract—definition of 1.11
Progress Payment, Applications for 14.2
Progress payment—retainage 14.2
Progress schedule, CONTRACTOR's 2.6, 2.8, 2.9, 6.6, 6.29, 10.4, 15.2.1
Project—definition of 1.31
Project Representative—
ENGINEER's Status During Construction 9.3
Project Representative, Resident
—definition of 1.33
prompt payment by OWNER 8.3
Property Insurance
Additional 5.7
general 5.6-5.10
Partial Utilization 5.15, 14.10.2
receipt and application of proceeds 5.12-5.13
Protection, Safety and 6.20-6.21, 13.2
Punch list 14.11
Radioactive Material—
definition 1.32
general 4.5
OWNER's responsibility for 8.10
Recommendation of Payment 14.4, 14.5, 14.13
Record Documents 6.19, 14.12
Records, procedures for maintaining 2.8
Reference Points 4.4
Reference to Standards and Specifications of Technical Societies 3.3

Article or Paragraph Number

Regulations, Laws and (or) 6.14
Rejecting Defective Work 9.6
Related Work—
at Site 7.1-7.3
Performed prior to Shop Drawings and Samples submittals review 6.28
Remedies, cumulative 17.4, 17.5
Removal or Correction of Defective Work 13.11
rental agreements, OWNER approval required 11.4.5.3
replacement of ENGINEER, by OWNER 8.2
Reporting and Resolving Discrepancies 2.5, 3.3.2, 6.14.2
Reports—
and Drawings 4.2.1
and Tests, OWNER's responsibility 8.4
Resident Project Representative—
definition of 1.33
provision for 9.3
Resident Superintendent, CONTRACTOR's 6.2
Responsibilities—
CONTRACTOR's-in general 6
ENGINEER's-in general 9
Limitations on 9.13
OWNER's-in general 8
Retainage 14.2
Reuse of Documents 3.7
Review by CONTRACTOR: Shop Drawings and Samples Prior to Submittal 6.25
Review of Applications for Progress Payments 14.4-14.7
Right to an adjustment 10.2
Rights of Way 4.1
Royalties, Patent Fees and 6.12
Safe Structural Loading 6.18
Safety—
and Protection 4.3.2, 6.16, 6.18, 6.20-6.21, 7.2, 13.2
general 6.20-6.23
Representative, CONTRACTOR's 6.21
Samples—
definition of 1.34
general 6.24-6.28
Review by CONTRACTOR 6.25
Review by ENGINEER 6.26, 6.27
related Work 6.28
submittal of 6.24.2
submittal procedures 6.25
Schedule of progress 2.6, 2.8-2.9, 6.6, 6.29, 10.4, 15.2.1
Schedule of Shop Drawing and Sample Submittals 2.6, 2.8-2.9, 6.24-6.28
Schedule of Values 2.6, 2.8-2.9, 14.1
Schedules—
Adherence to 15.2.1
Adjusting 6.6
Change of Contract Times 10.4
Initially Acceptable 2.8-2.9
Preliminary 2.6
Scope of Changes 10.3-10.4
Subsurface Conditions 4.2.1.1

Article or Paragraph Number

Shop Drawings—
and Samples, general 6.24-6.28
Change Orders & Applications for Payments, and 9.7-9.9
definition of 1.35
ENGINEER's approval of 3.6.2
ENGINEER's responsibility for review 9.7, 6.24-6.28
related Work 6.28
review procedures 2.8, 6.24-6.28
submittal required 6.24.1
Submittal Procedures 6.25
use to approve substitutions 6.7.3
Shown or Indicated 4.3.1
Site Access 7.2, 13.2
Site Cleanliness 6.17
Site, Visits to—
by ENGINEER 9.2, 13.2
by others 13.2
"Special causes of loss" policy form, insurance 5.6.2
Specifications—
definition of 1.36
of Technical Societies, reference to 3.3.1
precedence 3.3.3
Standards and Specifications of Technical Societies 3.3
Starting Construction, Before 2.5-2.8
Starting the Work 2.4
Stop or Suspend Work—
by CONTRACTOR 15.5
by OWNER 8.8, 13.10, 15.1
Storage of materials and equipment 4.1, 7.2
Structural Loading, Safety 6.18
Subcontractor—
Concerning 6.8-6.11
definition of 1.37
delays 12.3
waiver of rights 6.11
Subcontractors—in general 6.8-6.11
Subcontracts—required provisions 5.11, 6.11, 11.4.3
Submittals—
Applications for Payment 14.2
Maintenance and Operation Manuals 14.12
Procedures 6.25
Progress Schedules 2.6, 2.9
Samples 6.24-6.28
Schedule of Values 2.6, 14.1
Schedule of Shop Drawings and Samples Submissions 2.6, 2.8-2.9
Shop Drawings 6.24-6.28
Substantial Completion—
certification of 6.30.2.3, 14.8-14.9
definition of 1.38
Substitute Construction Methods or Procedures 6.7.2
Substitutes and "Or Equal" Items 6.7
CONTRACTOR's Expense 6.7.1.3
ENGINEER's Evaluation 6.7.3
"Or-Equal" 6.7.1
Substitute Construction Methods of Procedures 6.7.2

Article or Paragraph Number

Substitute Items 6.7.1.2
Subsurface and Physical Conditions—
Drawings of, in or relating to 4.2.1.2
ENGINEER's Review 4.2.4
general 4.2
Limited Reliance by CONTRACTOR Authorized 4.2.2
Notice of Differing Subsurface or Physical Conditions 4.2.3
Physical Conditions 4.2.1.2
Possible Contract Documents Change 4.2.5
Possible Price and Times Adjustments 4.2.6
Reports and Drawings 4.2.1
Subsurface and 4.2
Subsurface Conditions at the Site 4.2.1.1
Technical Data 4.2.2
Supervision—
CONTRACTOR's responsibility 6.1
OWNER shall not supervise 8.9
ENGINEER shall not supervise 9.2, 9.13.2
Superintendence 6.2
Superintendent, CONTRACTOR's resident 6.2
Supplemental costs 11.4.5
Supplementary Conditions—
definition of 1.39
principal reference to 1.10, 1.18, 2.2, 2.7, 4.2, 4.3, 5.1, 5.3, 5.4, 5.6-5.9, 5.11, 6.8, 6.13, 7.4, 8.11, 9.3, 9.10
Supplementing Contract Documents 3.6
Supplier—
definition of 1.40
principal references to 3.7, 6.5, 6.8-6.11, 6.20, 6.24, 9.13, 14.12
Waiver of Rights 6.11
Surety—
consent to final payment 14.12, 14.14
ENGINEER has no duty to 9.13
Notification of 10.1, 10.5, 15.2
qualification of 5.1-5.3
Survival of Obligations 6.34
Suspend Work, OWNER May 13.10, 15.1
Suspension of Work and Termination— 15
CONTRACTOR May Stop Work or Terminate 15.5
OWNER May Suspend Work 15.1
OWNER May Terminate 15.2-15.4
Taxes-Payment by CONTRACTOR 6.15
Technical Data—
Limited Reliance by CONTRACTOR 4.2.2
Possible Price and Times Adjustments 4.2.6
Reports of Differing Subsurface and Physical Conditions 4.2.3
Temporary construction facilities 4.1
Termination—
by CONTRACTOR 15.5
by OWNER 8.8, 15.1-15.4
of ENGINEER's employment 8.2
Suspension of Work-in general 15
Terms and Adjectives 3.4
Tests and Inspections—

Article or Paragraph Number

Acc·s to the Work, by others 13.2
CONTRACTOR's responsibilities 13.5
cost of 13.4
covering Work prior to 13.6-13.7
Laws and Regulations (or) 13.5
Notice of Defects 13.1
OWNER May Stop Work 13.10
OWNER's independent testing 13.4
special, required by ENGINEER 9.6
timely notice required 13.4
Uncovering the Work, at ENGINEER's request 13.8-13.9
Times—
Adjusting 6.6
Change of Contract 12
Adjusting 6.6
Computation of 17.2
Contract Times—definition of 1.12
day 17.72
Milestones 12
Requirements—
appeals 16
clarifications, claims and disputes 9.11, 11.2, 12
commencement of contract times 2.3
preconstruction conference 2.8
schedules 2.6, 2.9, 6.6
starting the Work 2.4
Title, Warranty of 14.3
Uncovering Work 13.8-13.9
Underground Facilities, Physical Conditions—
definition of 1.41
Not Shown or Indicated 4.3.2
protection of 4.3, 6.20
Shown or Indicated 4.3.1
Unit Price Work—
claims 11.9.3
definition of 1.42
general 11.9, 14.1, 14.5
Unit Prices—
general 11.3.1
Determination for 9.10
Use of Premises 6.16, 6.18, 6.30.2.4
Utility owners 6.13, 6.20, 7.1-7.3, 13.2

Article or Paragraph Number

Utilization, Partial 1.28, 5.15, 6.30, 2.4, 14.10
Value of the Work 11.3
Values, Schedule of 2.6, 2.8-2.9, 14.1
Variations in Work—Minor
Authorized 6.25, 6.27, 9.5
Visits of Site—by ENGINEER 9.2
Waiver of Claims-on Final Payment 14.15
Waiver of Rights by insured parties 5.11, 6.11
Warranty and Guarantee, General—by CONTRACTOR 6.30
Warranty of Title, CONTRACTOR's 14.3
Work—
Access to 13.2
by others, ... 7
Changes in the 10
Continuing the, ... 6.29
CONTRACTOR May Stop Work or Terminate 15.5
Coordination of 7.4
Cost of the 11.4-11.5
definition of 1.43
neglected by CONTRACTOR 13.14
other Work 7
OWNER May Stop Work 13.10
OWNER May Suspend Work 13.10, 15.1
Related, Work at Site 7.1-7.3
Starting the 2.4
Stopping by CONTRACTOR 15.5
Stopping by OWNER 15.1-15.4
Variation and deviation authorized, minor 3.6
Work Change Directive—
claims pursuant to 10.2
definition of 1.44
principal references to 3.5.3, 10.1-10.2
Written Amendment—
definition of 1.45
principal references to ... 1.10, 3.5, 5.10, 5.12, 6.6.2, 6.8.2, 6.19, 10.1, 10.4, 11.2, 12.1, 13.12.2, 14.7.2
Written Clarifications and Interpretations 3.6.3, 9.4, 9.11
Written Notice Required—
by CONTRACTOR 7.1, 9.10-9.11, 10.4, 11.2, 12.1
by OWNER 9.10-9.11, 10.4, 11.2, 13.14

GENERAL CONDITIONS

ARTICLE 1—DEFINITIONS

Wherever used in these General Conditions or in the other Contract Documents the following terms have the meanings indicated which are applicable to both the singular and plural thereof:

1.1. *Addenda*—Written or graphic instruments issued prior to the opening of Bids which clarify, correct or change the Bidding Requirements or the Contract Documents.

1.2. *Agreement*—The written contract between OWNER and CONTRACTOR covering the Work to be performed; other Contract Documents are attached to the Agreement and made a part thereof as provided therein.

1.3. *Application for Payment*—The form accepted by ENGINEER which is to be used by CONTRACTOR in requesting progress or final payments and which is to be accompanied by such supporting documentation as is required by the Contract Documents.

1.4. *Asbestos*—Any material that contains more than one percent asbestos and is friable or is releasing asbestos fibers into the air above current action levels established by the United States Occupational Safety and Health Administration.

1.5. *Bid*—The offer or proposal of the bidder submitted on the prescribed form setting forth the prices for the Work to be performed.

1.6. *Bidding Documents*—The advertisement or invitation to Bid, instructions to bidders, the Bid form, and the proposed Contract Documents (including all Addenda issued prior to receipt of Bids).

1.7. *Bidding Requirements*—The advertisement or invitation to Bid, instructions to bidders, and the Bid form.

1.8. *Bonds*—Performance and Payment bonds and other instruments of security.

1.9. *Change Order*—A document recommended by ENGINEER, which is signed by CONTRACTOR and OWNER and authorizes an addition, deletion or revision in the Work, or an adjustment in the Contract Price or the Contract Times, issued on or after the Effective Date of the Agreement.

1.10. *Contract Documents*—The Agreement, Addenda (which pertain to the Contract Documents), CONTRACTOR's Bid (including documentation accompanying the Bid and any post Bid documentation submitted prior to the Notice of Award) when attached as an exhibit to the Agreement, the Notice to Proceed, the Bonds, these General Conditions, the Supplementary Conditions, the Specifications and the Drawings as the same are more specifically identified in the Agreement, together with all Written Amendments, Change Orders, Work Change Directives, Field Orders and ENGINEER's written interpretations and clarifications issued pursuant to paragraphs 3.5, 3.6.1, and 3.6.3 on or after the Effective Date of the Agreement. Shop Drawing submittals approved pursuant to paragraphs 6.26 and 6.27 and the reports and drawings referred to in paragraphs 4.2.1.1 and 4.2.2.2 are not Contract Documents.

1.11. *Contract Price*—The moneys payable by OWNER to CONTRACTOR for completion of the Work in accordance with the Contract Documents as stated in the Agreement (subject to the provisions of paragraph 11.9.1 in the case of Unit Price Work).

1.12. *Contract Times*—The numbers of days or the dates stated in the Agreement: (i) to achieve Substantial Completion, and (ii) to complete the Work so that it is ready for final payment as evidenced by ENGINEER's written recommendation of final payment in accordance with paragraph 14.13.

1.13. *CONTRACTOR*—The person, firm or corporation with whom OWNER has entered into the Agreement.

1.14. *defective*—An adjective which when modifying the word Work refers to Work that is unsatisfactory, faulty or deficient, in that it does not conform to the Contract Documents, or does not meet the requirements of any inspection, reference standard, test or approval referred to in the Contract Documents, or has been damaged prior to ENGINEER's recommendation of final payment (unless responsibility for the protection thereof has been assumed by OWNER at Substantial Completion in accordance with paragraph 14.8 or 14.10).

1.15. *Drawings*—The drawings which show the scope, extent and character of the Work to be furnished and performed by CONTRACTOR and which have been prepared or approved by ENGINEER and are referred to in the Contract Documents. Shop drawings are not Drawings as so defined.

1.16. *Effective Date of the Agreement*—The date indicated in the Agreement on which it becomes effective, but if no such date is indicated it means the date on which the Agreement is signed and delivered by the last of the two parties to sign and deliver.

1.17. *ENGINEER*—The person, firm or corporation named as such in the Agreement.

1.18. *ENGINEER's Consultant*—A person, firm or corporation having a contract with ENGINEER to furnish services as ENGINEER's independent professional associate or consultant with respect to the Project and who is identified as such in the Supplementary Conditions.

1.19. *Field Order*—A written order issued by ENGINEER which orders minor changes in the Work in accordance with paragraph 9.5 but which does not involve a change in the Contract Price or the Contract Times.

1.20. *General Requirements*—Sections of Division 1 of the Specifications.

1.21. *Hazardous Waste*—The term Hazardous Waste shall have the meaning provided in Section 1004 of the Solid Waste Disposal Act (42 USC Section 6903) as amended from time to time.

1.22. *Laws and Regulations; Laws or Regulations*—Any and all applicable laws, rules, regulations, ordinances, codes and orders of any and all governmental bodies, agencies, authorities and courts having jurisdiction.

1.23. *Liens*—Liens, charges, security interests or encumbrances upon real property or personal property.

1.24. *Milestone*—A principal event specified in the Contract Documents relating to an intermediate completion date or time prior to Substantial Completion of all the Work.

1.25. *Notice of Award*—The written notice by OWNER to the apparent successful bidder stating that upon compliance by the apparent successful bidder with the conditions precedent enumerated therein, within the time specified, OWNER will sign and deliver the Agreement.

1.26. *Notice to Proceed*—A written notice given by OWNER to CONTRACTOR (with a copy to ENGINEER) fixing the date on which the Contract Times will commence to run and on which CONTRACTOR shall start to perform CONTRACTOR's obligations under the Contract Documents.

1.27. *OWNER*—The public body or authority, corporation, association, firm or person with whom CONTRACTOR has entered into the Agreement and for whom the Work is to be provided.

1.28. *Partial Utilization*—Use by OWNER of a substantially completed part of the Work for the purpose for which it is intended (or a related purpose) prior to Substantial Completion of all the Work.

1.29. *PCBs*—Polychlorinated biphenyls.

1.30. *Petroleum*—Petroleum, including crude oil or any fraction thereof which is liquid at standard conditions of temperature and pressure (60 degrees Fahrenheit and 14.7 pounds per square inch absolute), such as oil, petroleum, fuel oil, oil sludge, oil refuse, gasoline, kerosene, and oil mixed with other non-Hazardous Wastes and crude oils.

1.31. *Project*—The total construction of which the Work to be provided under the Contract Documents may be the whole, or a part as indicated elsewhere in the Contract Documents.

1.32. *Radioactive Material*—Source, special nuclear, or byproduct material as defined by the Atomic Energy Act of 1954 (42 USC Section 2011 et seq.) as amended from time to time.

1.33. *Resident Project Representative*— The authorized representative of ENGINEER who may be assigned to the site or any part thereof.

1.34. *Samples*—Physical examples of materials, equipment, or workmanship that are representative of some portion of the Work and which establish the standards by which such portion of the Work will be judged.

1.35. *Shop Drawings*—All drawings, diagrams, illustrations, schedules and other data or information which are specifically prepared or assembled by or for CONTRACTOR and submitted by CONTRACTOR to illustrate some portion of the Work.

1.36. *Specifications*—Those portions of the Contract Documents consisting of written technical descriptions of materials, equipment, construction systems, standards and workmanship as applied to the Work and certain administrative details applicable thereto.

1.37. *Subcontractor*—An individual, firm or corporation having a direct contract with CONTRACTOR or with any other Subcontractor for the performance of a part of the Work at the site.

1.38. *Substantial Completion*—The Work (or a specified part thereof) has progressed to the point where, in the opinion of ENGINEER as evidenced by ENGINEER's definitive certificate of Substantial Completion, it is sufficiently complete, in accordance with the Contract Documents, so that the Work (or specified part) can be utilized for the purposes for which it is intended; or if no such certificate is issued, when the Work is complete and ready for final payment as evidenced by ENGINEER's written recommendation of final payment in accordance with paragraph 14.13. The terms "substantially complete" and "substantially completed" as applied to all or part of the Work refer to Substantial Completion thereof.

1.39. *Supplementary Conditions*—The part of the Contract Documents which amends or supplements these General Conditions.

1.40. *Supplier*—A manufacturer, fabricator, supplier, distributor, materialman or vendor having a direct contract with CONTRACTOR or with any Subcontractor to furnish materials or equipment to be incorporated in the Work by CONTRACTOR or any Subcontractor.

1.41. *Underground Facilities*—All pipelines, conduits, ducts, cables, wires, manholes, vaults, tanks, tunnels or other such facilities or attachments, and any encasements containing such facilities which have been installed underground to furnish any of the following services or materials: electricity, gases, steam, liquid petroleum products, telephone or other communications, cable television, sewage and drainage removal, traffic or other control systems or water.

1.42. *Unit Price Work*—Work to be paid for on the basis of unit prices.

1.43. *Work*—The entire completed construction or the various separately identifiable parts thereof required to be furnished under the Contract Documents. Work includes and is the result of performing or furnishing labor and furnishing and incorporating materials and equipment into the construction, and performing or furnishing services and furnishing documents, all as required by the Contract Documents.

1.44. *Work Change Directive*—A written directive to CONTRACTOR, issued on or after the Effective Date of the Agreement and signed by OWNER and recommended by ENGINEER, ordering an addition, deletion or revision in the Work, or responding to differing or unforeseen physical conditions under which the Work is to be performed as provided in paragraph 4.2 or 4.3 or to emergencies under paragraph 6.23. A Work Change Directive will not change the Contract Price or the Contract Times, but is evidence that the parties expect that the change directed or documented by a Work Change Directive will be incorporated in a subsequently issued Change Order following negotiations by the parties as to its effect, if any, on the Contract Price or Contract Times as provided in paragraph 10.2.

1.45. *Written Amendment*—A written amendment of the Contract Documents, signed by OWNER and CONTRACTOR on or after the Effective Date of the Agreement and normally dealing with the nonengineering or nontechnical rather than strictly construction-related aspects of the Contract Documents.

ARTICLE 2—PRELIMINARY MATTERS

Delivery of Bonds:

2.1. When CONTRACTOR delivers the executed Agreements to OWNER, CONTRACTOR shall also deliver to OWNER such Bonds as CONTRACTOR may be required to furnish in accordance with paragraph 5.1.

Copies of Documents:

2.2. OWNER shall furnish to CONTRACTOR up to ten copies (unless otherwise specified in the Supplementary Conditions) of the Contract Documents as are reasonably necessary for the execution of the Work. Additional copies will be furnished, upon request, at the cost of reproduction.

Commencement of Contract Times; Notice to Proceed:

2.3. The Contract Times will commence to run on the thirtieth day after the Effective Date of the Agreement, or, if a Notice to Proceed is given, on the day indicated in the Notice to Proceed. A Notice to Proceed may be given at any time within thirty days after the Effective Date of the Agreement. In no event will the Contract Times commence to run later than the sixtieth day after the day of Bid opening or the thirtieth day after the Effective Date of the Agreement, whichever date is earlier.

Starting the Work:

2.4. CONTRACTOR shall start to perform the Work on the date when the Contract Times commence to run, but no Work shall be done at the site prior to the date on which the Contract Times commence to run.

Before Starting Construction:

2.5. Before undertaking each part of the Work, CONTRACTOR shall carefully study and compare the Contract Documents and check and verify pertinent figures shown thereon and all applicable field measurements. CONTRACTOR shall promptly report in writing to ENGINEER any conflict, error, ambiguity or discrepancy which CONTRACTOR may discover and shall obtain a written interpretation or clarification from ENGINEER before proceeding with any Work affected thereby; however, CONTRACTOR shall not be liable to OWNER or ENGINEER for failure to report any conflict, error, ambiguity or discrepancy in the Contract Documents, unless CONTRACTOR knew or reasonably should have known thereof.

2.6. Within ten days after the Effective Date of the Agreement (unless otherwise specified in the General Requirements), CONTRACTOR shall submit to ENGINEER for review:

2.6.1. a preliminary progress schedule indicating the times (numbers of days or dates) for starting and completing the various stages of the Work, including any Milestones specified in the Contract Documents;

2.6.2. a preliminary schedule of Shop Drawing and Sample submittals which will list each required submittal and the times for submitting, reviewing and processing such submittal;

2.6.3. a preliminary schedule of values for all of the Work which will include quantities and prices of items aggregating the Contract Price and will subdivide the Work into component parts in sufficient detail to serve as the basis for progress payments during construction. Such prices will include an appropriate amount of overhead and profit applicable to each item of Work.

2.7. Before any Work at the site is started, CONTRACTOR and OWNER shall each deliver to the other, with copies to each additional insured identified in the Supplementary Conditions, certificates of insurance (and other evidence of insurance which either of them or any additional insured may reasonably request) which CONTRACTOR and OWNER respectively are required to purchase and maintain in accordance with paragraphs 5.4, 5.6 and 5.7.

Preconstruction Conference:

2.8. Within twenty days after the Contract Times start to run, but before any Work at the site is started, a conference

attended by CONTRACTOR, ENGINEER and others as appropriate will be held to establish a working understanding among the parties as to the Work and to discuss the schedules referred to in paragraph 2.6, procedures for handling Shop Drawings and other submittals, processing Applications for Payment and maintaining required records.

Initially Acceptable Schedules:

2.9. Unless otherwise provided in the Contract Documents, at least ten days before submission of the first Application for Payment a conference attended by CONTRACTOR, ENGINEER and others as appropriate will be held to review for acceptability to ENGINEER as provided below the schedules submitted in accordance with paragraph 2.6. CONTRACTOR shall have an additional ten days to make corrections and adjustments and to complete and resubmit the schedules. No progress payment shall be made to CONTRACTOR until the schedules are submitted to and acceptable to ENGINEER as provided below. The progress schedule will be acceptable to ENGINEER as providing an orderly progression of the Work to completion within any specified Milestones and the Contract Times, but such acceptance will neither impose on ENGINEER responsibility for the sequencing, scheduling or progress of the Work nor interfere with or relieve CONTRACTOR from CONTRACTOR's full responsibility therefor. CONTRACTOR's schedule of Shop Drawing and Sample submissions will be acceptable to ENGINEER as providing a workable arrangement for reviewing and processing the required submittals. CONTRACTOR's schedule of values will be acceptable to ENGINEER as to form and substance.

ARTICLE 3—CONTRACT DOCUMENTS: INTENT, AMENDING, REUSE

Intent:

3.1. The Contract Documents comprise the entire agreement between OWNER and CONTRACTOR concerning the Work. The Contract Documents are complementary; what is called for by one is as binding as if called for by all. The Contract Documents will be construed in accordance with the law of the place of the Project.

3.2. It is the intent of the Contract Documents to describe a functionally complete Project (or part thereof) to be constructed in accordance with the Contract Documents. Any Work, materials or equipment that may reasonably be inferred from the Contract Documents or from prevailing custom or trade usage as being required to produce the intended result will be furnished and performed whether or not specifically called for. When words or phrases which have a well-known technical or construction industry or trade meaning are used to describe Work, materials or equipment, such words or phrases shall be interpreted in accordance with that meaning. Clarifications and interpretations of the Contract Documents shall be issued by ENGINEER as provided in paragraph 9.4.

3.3. *Reference to Standards and Specifications of Technical Societies; Reporting and Resolving Discrepancies:*

3.3.1. Reference to standards, specifications, manuals or codes of any technical society, organization or association, or to the Laws or Regulations of any governmental authority, whether such reference be specific or by implication, shall mean the latest standard, specification, manual, code or Laws or Regulations in effect at the time of opening of Bids (or, on the Effective Date of the Agreement if there were no Bids), except as may be otherwise specifically stated in the Contract Documents.

3.3.2. If, during the performance of the Work, CONTRACTOR discovers any conflict, error, ambiguity or discrepancy within the Contract Documents or between the Contract Documents and any provision of any such Law or Regulation applicable to the performance of the Work or of any such standard, specification, manual or code or of any instruction of any Supplier referred to in paragraph 6.5, CONTRACTOR shall report it to ENGINEER in writing at once, and, CONTRACTOR shall not proceed with the Work affected thereby (except in an emergency as authorized by paragraph 6.23) until an amendment or supplement to the Contract Documents has been issued by one of the methods indicated in paragraph 3.5 or 3.6; provided, however, that CONTRACTOR shall not be liable to OWNER or ENGINEER for failure to report any such conflict, error, ambiguity or discrepancy unless CONTRACTOR knew or reasonably should have known thereof.

3.3.3. Except as otherwise specifically stated in the Contract Documents or as may be provided by amendment or supplement thereto issued by one of the methods indicated in paragraph 3.5 or 3.6, the provisions of the Contract Documents shall take precedence in resolving any conflict, error, ambiguity or discrepancy between the provisions of the Contract Documents and:

3.3.3.1. the provisions of any such standard, specification, manual, code or instruction (whether or not specifically incorporated by reference in the Contract Documents); or

3.3.3.2. the provisions of any such Laws or Regulations applicable to the performance of the Work (unless such an interpretation of the provisions of the Contract Documents would result in violation of such Law or Regulation).

No provision of any such standard, specification, manual, code or instruction shall be effective to change the duties and responsibilities of OWNER, CONTRACTOR or ENGINEER, or any of their subcontractors, consultants, agents, or employees from those set forth in the Contract Documents, nor shall it be effective to assign to OWNER, ENGINEER or any of ENGINEER's Consultants, agents or employees any duty or authority to supervise or direct the furnishing or

performance of the Work or any duty or authority to undertake responsibility inconsistent with the provisions of paragraph 9.13 or any other provision of the Contract Documents.

3.4. Whenever in the Contract Documents the terms "as ordered," "as directed," "as required," "as allowed," "as approved" or terms of like effect or import are used, or the adjectives "reasonable," "suitable," "acceptable," "proper" or "satisfactory" or adjectives of like effect or import are used to describe a requirement, direction, review or judgment of ENGINEER as to the Work, it is intended that such requirement, direction, review or judgment will be solely to evaluate, in general, the completed Work for compliance with the requirements of and information in the Contract Documents and conformance with the design concept of the completed Project as a functioning whole as shown or indicated in the Contract Documents (unless there is a specific statement indicating otherwise). The use of any such term or adjective shall not be effective to assign to ENGINEER any duty or authority to supervise or direct the furnishing or performance of the Work or any duty or authority to undertake responsibility contrary to the provisions of paragraph 9.13 or any other provision of the Contract Documents.

Amending and Supplementing Contract Documents:

3.5. The Contract Documents may be amended to provide for additions, deletions and revisions in the Work or to modify the terms and conditions thereof in one or more of the following ways:

3.5.1. a formal Written Amendment,

3.5.2. a Change Order (pursuant to paragraph 10.4), or

3.5.3. a Work Change Directive (pursuant to paragraph 10.1).

3.6. In addition, the requirements of the Contract Documents may be supplemented, and minor variations and deviations in the Work may be authorized, in one or more of the following ways:

3.6.1. a Field Order (pursuant to paragraph 9.5),

3.6.2. ENGINEER's approval of a Shop Drawing or Sample (pursuant to paragraphs 6.26 and 6.27), or

3.6.3. ENGINEER's written interpretation or clarification (pursuant to paragraph 9.4).

Reuse of Documents:

3.7. CONTRACTOR, and any Subcontractor or Supplier or other person or organization performing or furnishing any of the Work under a direct or indirect contract with OWNER (i) shall not have or acquire any title to or ownership rights in any of the Drawings, Specifications or other documents (or copies of any thereof) prepared by or bearing the seal of ENGINEER or ENGINEER's Consultant, and (ii) shall not reuse any of such Drawings, Specifications, other documents or copies on extensions of the Project or any other project without written consent of OWNER and ENGINEER and specific written verification or adaption by ENGINEER.

ARTICLE 4—AVAILABILITY OF LANDS; SUBSURFACE AND PHYSICAL CONDITIONS; REFERENCE POINTS

Availability of Lands:

4.1. OWNER shall furnish, as indicated in the Contract Documents, the lands upon which the Work is to be performed, rights-of-way and easements for access thereto, and such other lands which are designated for the use of CONTRACTOR. Upon reasonable written request, OWNER shall furnish CONTRACTOR with a correct statement of record legal title and legal description of the lands upon which the Work is to be performed and OWNER's interest therein as necessary for giving notice of or filing a mechanic's lien against such lands in accordance with applicable Laws and Regulations. OWNER shall identify any encumbrances or restrictions not of general application but specifically related to use of lands so furnished with which CONTRACTOR will have to comply in performing the Work. Easements for permanent structures or permanent changes in existing facilities will be obtained and paid for by OWNER, unless otherwise provided in the Contract Documents. If CONTRACTOR and OWNER are unable to agree on entitlement to or the amount or extent of any adjustments in the Contract Price or the Contract Times as a result of any delay in OWNER's furnishing these lands, rights-of-way or easements, CONTRACTOR may make a claim therefor as provided in Articles 11 and 12. CONTRACTOR shall provide for all additional lands and access thereto that may be required for temporary construction facilities or storage of materials and equipment.

4.2. *Subsurface and Physical Conditions:*

4.2.1. *Reports and Drawings:* Reference is made to the Supplementary Conditions for identification of:

4.2.1.1. *Subsurface Conditions:* Those reports of explorations and tests of subsurface conditions at or contiguous to the site that have been utilized by ENGINEER in preparing the Contract Documents; and

4.2.1.2. *Physical Conditions:* Those drawings of physical conditions in or relating to existing surface or subsurface structures at or contiguous to the site (except Underground Facilities) that have been utilized by ENGINEER in preparing the Contract Documents.

4.2.2. *Limited Reliance by CONTRACTOR Authorized: Technical Data:* CONTRACTOR may rely upon the general accuracy of the "technical data" contained in such reports and drawings, but such reports and drawings are not Contract Documents. Such "technical data" is identified in the Supplementary Conditions. Except for such reliance on such "technical data," CONTRACTOR may not rely upon or make any claim against OWNER, ENGINEER or any of ENGINEER's Consultants with respect to:

4.2.2.1. the completeness of such reports and drawings for CONTRACTOR's purposes, including, but not limited to, any aspects of the means, methods, techniques, sequences and procedures of construction to be employed by CONTRACTOR and safety precautions and programs incident thereto, or

4.2.2.2. other data, interpretations, opinions and information contained in such reports or shown or indicated in such drawings, or

4.2.2.3. any CONTRACTOR interpretation of or conclusion drawn from any "technical data" or any such data, interpretations, opinions or information.

4.2.3. *Notice of Differing Subsurface or Physical Conditions:* If CONTRACTOR believes that any subsurface or physical condition at or contiguous to the site that is uncovered or revealed either:

4.2.3.1. is of such a nature as to establish that any "technical data" on which CONTRACTOR is entitled to rely as provided in paragraphs 4.2.1 and 4.2.2 is materially inaccurate, or

4.2.3.2. is of such a nature as to require a change in the Contract Documents, or

4.2.3.3. differs materially from that shown or indicated in the Contract Documents, or

4.2.3.4. is of an unusual nature, and differs materially from conditions ordinarily encountered and generally recognized as inherent in work of the character provided for in the Contract Documents; then

CONTRACTOR shall, promptly after becoming aware thereof and before further disturbing conditions affected thereby or performing any Work in connection therewith (except in an emergency as permitted by paragraph 6.23), notify OWNER and ENGINEER in writing about such condition. CONTRACTOR shall not further disturb such conditions or perform any Work in connection therewith (except as aforesaid) until receipt of written order to do so.

4.2.4. *ENGINEER's Review:* ENGINEER will promptly review the pertinent conditions, determine the necessity of OWNER's obtaining additional exploration or tests with respect thereto and advise OWNER in writing (with a copy to CONTRACTOR) of ENGINEER's findings and conclusions.

4.2.5. *Possible Contract Documents Change:* If ENGINEER concludes that a change in the Contract Documents is required as a result of a condition that meets one or more of the categories in paragraph 4.2.3., a Work Change Directive or a Change Order will be issued as provided in Article 10 to reflect and document the consequences of such change.

4.2.6. *Possible Price and Times Adjustments:* An equitable adjustment in the Contract Price or in the Contract Times, or both, will be allowed to the extent that the existence of such uncovered or revealed condition causes an increase or decrease in CONTRACTOR's cost of, or time required for performance of, the Work; subject, however, to the following:

4.2.6.1. such condition must meet any one or more of the categories described in paragraphs 4.2.3.1 through 4.2.3.4, inclusive;

4.2.6.2. a change in the Contract Documents pursuant to paragraph 4.2.5 will not be an automatic authorization of nor a condition precedent to entitlement to any such adjustment;

4.2.6.3. with respect to Work that is paid for on a Unit Price Basis, any adjustment in Contract Price will be subject to the provisions of paragraphs 9.10 and 11.9; and

4.2.6.4. CONTRACTOR shall not be entitled to any adjustment in the Contract Price or Times if;

4.2.6.4.1. CONTRACTOR knew of the existence of such conditions at the time CONTRACTOR made a final commitment to OWNER in respect of Contract Price and Contract Times by the submission of a bid or becoming bound under a negotiated contract; or

4.2.6.4.2. the existence of such condition could reasonably have been discovered or revealed as a result of any examination, investigation, exploration, test or study of the site and contiguous areas required by the Bidding Requirements or Contract Documents to be conducted by or for CONTRACTOR prior to CONTRACTOR's making such final commitment; or

4.2.6.4.3. CONTRACTOR failed to give the written notice within the time and as required by paragraph 4.2.3.

If OWNER and CONTRACTOR are unable to agree on entitlement to or as to the amount or length of any such equitable adjustment in the Contract Price or Contract Times, a claim may be made therefor as provided in Articles 11 and 12. However, OWNER, ENGINEER and ENGINEER's Consultants shall not be liable to CONTRACTOR for any claims, costs, losses or damages sustained by CONTRACTOR on or in connection with any other project or anticipated project.

4.3. *Physical Conditions—Underground Facilities:*

4.3.1. *Shown or Indicated:* The information and data shown or indicated in the Contract Documents with respect to existing Underground Facilities at or contiguous to the site is based on

information and data furnished to OWNER or ENGINEER by the owners of such Underground Facilities or by others. Unless it is otherwise expressly provided in the Supplementary Conditions:

4.3.1.1. OWNER and ENGINEER shall not be responsible for the accuracy or completeness of any such information or data; and

4.3.1.2. The cost of all of the following will be included in the Contract Price and CONTRACTOR shall have full responsibility for: (i) reviewing and checking all such information and data, (ii) locating all Underground Facilities shown or indicated in the Contract Documents, (iii) coordination of the Work with the owners of such Underground Facilities during construction, and (iv) the safety and protection of all such Underground Facilities as provided in paragraph 6.20 and repairing any damage thereto resulting from the Work.

4.3.2. *Not Shown or Indicated:* If an Underground Facility is uncovered or revealed at or contiguous to the site which was not shown or indicated in the Contract Documents, CONTRACTOR shall, promptly after becoming aware thereof and before further disturbing conditions affected thereby or performing any Work in connection therewith (except in an emergency as required by paragraph 6.23), identify the owner of such Underground Facility and give written notice to that owner and to OWNER and ENGINEER. ENGINEER will promptly review the Underground Facility and determine the extent, if any, to which a change is required in the Contract Documents to reflect and document the consequences of the existence of the Underground Facility. If ENGINEER concludes that a change in the Contract Documents is required, a Work Change Directive or a Change Order will be issued as provided in Article 10 to reflect and document such consequences. During such time, CONTRACTOR shall be responsible for the safety and protection of such Underground Facility as provided in paragraph 6.20. CONTRACTOR shall be allowed an increase in the Contract Price or an extension of the Contract Times, or both, to the extent that they are attributable to the existence of any Underground Facility that was not shown or indicated in the Contract Documents and that CONTRACTOR did not know of and could not reasonably have been expected to be aware of or to have anticipated. If OWNER and CONTRACTOR are unable to agree on entitlement to or the amount or length of any such adjustment in Contract Price or Contract Times, CONTRACTOR may make a claim therefor as provided in Articles 11 and 12. However, OWNER, ENGINEER and ENGINEER's Consultants shall not be liable to CONTRACTOR for any claims, costs, losses or damages incurred or sustained by CONTRACTOR on or in connection with any other project or anticipated project.

Reference Points:

4.4. OWNER shall provide engineering surveys to establish reference points for construction which in ENGINEER's judgment are necessary to enable CONTRACTOR to proceed with the Work. CONTRACTOR shall be responsible for laying out the Work, shall protect and preserve the established reference points and shall make no changes or relocations without the prior written approval of OWNER. CONTRACTOR shall report to ENGINEER whenever any reference point is lost or destroyed or requires relocation because of necessary changes in grades or locations, and shall be responsible for the accurate replacement or relocation of such reference points by professionally qualified personnel.

4.5. Asbestos, PCBs, Petroleum, Hazardous Waste or Radioactive Material:

4.5.1. OWNER shall be responsible for any Asbestos, PCBs, Petroleum, Hazardous Waste or Radioactive Material uncovered or revealed at the site which was not shown or indicated in Drawings or Specifications or identified in the Contract Documents to be within the scope of the Work and which may present a substantial danger to persons or property exposed thereto in connection with the Work at the site. OWNER shall not be responsible for any such materials brought to the site by CONTRACTOR, Subcontractor, Suppliers or anyone else for whom CONTRACTOR is responsible.

4.5.2. CONTRACTOR shall immediately: (i) stop all Work in connection with such hazardous condition and in any area affected thereby (except in an emergency as required by paragraph 6.23), and (ii) notify OWNER and ENGINEER (and thereafter confirm such notice in writing). OWNER shall promptly consult with ENGINEER concerning the necessity for OWNER to retain a qualified expert to evaluate such hazardous condition or take corrective action, if any. CONTRACTOR shall not be required to resume Work in connection with such hazardous condition or in any such affected area until after OWNER has obtained any required permits related thereto and delivered to CONTRACTOR special written notice: (i) specifying that such condition and any affected area is or has been rendered safe for the resumption of Work, or (ii) specifying any special conditions under which such Work may be resumed safely. If OWNER and CONTRACTOR cannot agree as to entitlement to or the amount or extent of an adjustment, if any, in Contract Price or Contract Times as a result of such Work stoppage or such special conditions under which Work is agreed by CONTRACTOR to be resumed, either party may make a claim therefor as provided in Articles 11 and 12.

4.5.3. If after receipt of such special written notice CONTRACTOR does not agree to resume such Work based on a reasonable belief it is unsafe, or does not agree to resume such Work under such special conditions, then OWNER may order such portion of the Work that is in connection with such hazardous condition or in such affected area to be deleted from the Work. If OWNER and CONTRACTOR cannot agree as to entitlement to or the amount or extent of an adjustment, if any, in Contract Price or Contract Times as a result of deleting such portion of the Work, then either party may make a claim therefor as provided in Articles 11 and 12. OWNER may have such deleted portion of the Work performed by OWNER's own forces or others in accordance with Article 7.

4.5.4. To the fullest extent permitted by Laws and Regulations, OWNER shall indemnify and hold harmless CONTRACTOR, Subcontractors, ENGINEER, ENGINEER's

Consultants and the officers, directors, employees, agents, other consultants and subcontractors of each and any of them from and against all claims, costs, losses and damages arising out of or resulting from such hazardous condition, provided that: (i) any such claim, cost, loss or damage is attributable to bodily injury, sickness, disease or death, or to injury to or destruction of tangible property (other than the Work itself), including the loss of use resulting therefrom, and (ii) nothing in this subparagraph 4.5.4 shall obligate OWNER to indemnify any person or entity from and against the consequences of that person's or entity's own negligence.

4.5.5. The provisions of paragraphs 4.2 and 4.3 are not intended to apply to Asbestos, PCBs, Petroleum, Hazardous Waste or Radioactive Material uncovered or revealed at the site.

ARTICLE 5—BONDS AND INSURANCE

Performance, Payment and Other Bonds:

5.1. CONTRACTOR shall furnish Performance and Payment Bonds, each in an amount at least equal to the Contract Price as security for the faithful performance and payment of all CONTRACTOR's obligations under the Contract Documents. These Bonds shall remain in effect at least until one year after the date when final payment becomes due, except as provided otherwise by Laws or Regulations or by the Contract Documents. CONTRACTOR shall also furnish such other Bonds as are required by the Supplementary Conditions. All Bonds shall be in the form prescribed by the Contract Documents except as provided otherwise by Laws or Regulations, and shall be executed by such sureties as are named in the current list of "Companies Holding Certificates of Authority as Acceptable Sureties on Federal Bonds and as Acceptable Reinsuring Companies" as published in Circular 570 (amended) by the Audit Staff, Bureau of Government Financial Operations, U.S. Treasury Department. All Bonds signed by an agent must be accompanied by a certified copy of such agent's authority to act.

5.2. If the surety on any Bond furnished by CONTRACTOR is declared a bankrupt or becomes insolvent or its right to do business is terminated in any state where any part of the Project is located or it ceases to meet the requirements of paragraph 5.1, CONTRACTOR shall within ten days thereafter substitute another Bond and surety, both of which must be acceptable to OWNER.

5.3. Licensed Sureties and Insurers; Certificates of Insurance:

5.3.1. All Bonds and insurance required by the Contract Documents to be purchased and maintained by OWNER or CONTRACTOR shall be obtained from surety or insurance companies that are duly licensed or authorized in the jurisdiction in which the Project is located to issue Bonds or insurance policies for the limits and coverages so required. Such surety and insurance companies shall also meet such additional requirements and qualifications as may be provided in the Supplementary Conditions.

5.3.2. CONTRACTOR shall deliver to OWNER, with copies to each additional insured identified in the Supplementary Conditions, certificates of insurance (and other evidence of insurance requested by OWNER or any other additional insured) which CONTRACTOR is required to purchase and maintain in accordance with paragraph 5.4. OWNER shall deliver to CONTRACTOR, with copies to each additional insured identified in the Supplementary Conditions, certificates of insurance (and other evidence of insurance requested by CONTRACTOR or any other additional insured) which OWNER is required to purchase and maintain in accordance with paragraphs 5.6 and 5.7 hereof.

CONTRACTOR's Liability Insurance:

5.4. CONTRACTOR shall purchase and maintain such liability and other insurance as is appropriate for the Work being performed and furnished and as will provide protection from claims set forth below which may arise out of or result from CONTRACTOR's performance and furnishing of the Work and CONTRACTOR's other obligations under the Contract Documents, whether it is to be performed or furnished by CONTRACTOR, any Subcontractor or Supplier, or by anyone directly or indirectly employed by any of them to perform or furnish any of the Work, or by anyone for whose acts any of them may be liable:

5.4.1. claims under workers' compensation, disability benefits and other similar employee benefit acts;

5.4.2. claims for damages because of bodily injury, occupational sickness or disease, or death of CONTRACTOR's employees;

5.4.3. claims for damages because of bodily injury, sickness or disease, or death of any person other than CONTRACTOR's employees;

5.4.4. claims for damages insured by customary personal injury liability coverage which are sustained: (i) by any person as a result of an offense directly or indirectly related to the employment of such person by CONTRACTOR, or (ii) by any other person for any other reason;

5.4.5. claims for damages, other than to the Work itself, because of injury to or destruction of tangible property wherever located, including loss of use resulting therefrom; and

5.4.6. claims for damages because of bodily injury or death of any person or property damage arising out of the ownership, maintenance or use of any motor vehicle.

The policies of insurance so required by this paragraph 5.4 to be purchased and maintained shall:

5.4.7. with respect to insurance required by paragraphs 5.4.3 through 5.4.6 inclusive, include as additional insureds (subject to any customary exclusion in respect of professional liability) OWNER, ENGINEER, ENGINEER's Consultants and any other persons or entities identified in the Supplementary Conditions, all of whom shall be listed as additional insureds, and include coverage for the respective officers and employees of all such additional insureds;

5.4.8. include the specific coverages and be written for not less than the limits of liability provided in the Supplementary Conditions or required by Laws or Regulations, whichever is greater;

5.4.9. include completed operations insurance;

5.4.10. include contractual liability insurance covering CONTRACTOR's indemnity obligations under paragraphs 6.12, 6.16 and 6.31 through 6.33;

5.4.11. contain a provision or endorsement that the coverage afforded will not be cancelled, materially changed or renewal refused until at least thirty days prior written notice has been given to OWNER and CONTRACTOR and to each other additional insured identified in the Supplementary Conditions to whom a certificate of insurance has been issued (and the certificates of insurance furnished by the CONTRACTOR pursuant to paragraph 5.3.2 will so provide);

5.4.12. remain in effect at least until final payment and at all times thereafter when CONTRACTOR may be correcting, removing or replacing *defective* Work in accordance with paragraph 13.12; and

5.4.13. with respect to completed operations insurance, and any insurance coverage written on a claims-made basis, remain in effect for at least two years after final payment (and CONTRACTOR shall furnish OWNER and each other additional insured identified in the Supplementary Conditions to whom a certificate of insurance has been issued evidence satisfactory to OWNER and any such additional insured of continuation of such insurance at final payment and one year thereafter).

OWNER's Liability Insurance:

5.5. In addition to the insurance required to be provided by CONTRACTOR under paragraph 5.4, OWNER, at OWNER's option, may purchase and maintain at OWNER's expense OWNER's own liability insurance as will protect OWNER against claims which may arise from operations under the Contract Documents.

Property Insurance:

5.6. Unless otherwise provided in the Supplementary Conditions, OWNER shall purchase and maintain property insurance upon the Work at the site in the amount of the full replacement cost thereof (subject to such deductible amounts as may be provided in the Supplementary Conditions or required by Laws and Regulations). This insurance shall:

5.6.1. include the interests of OWNER, CONTRACTOR, Subcontractors, ENGINEER, ENGINEER's Consultants and any other persons or entities identified in the Supplementary Conditions, each of whom is deemed to have an insurable interest and shall be listed as an insured or additional insured;

5.6.2. be written on a Builder's Risk "all-risk" or open peril or special causes of loss policy form that shall at least include insurance for physical loss or damage to the Work, temporary buildings, falsework and Work in transit and shall insure against at least the following perils fire, lightning, extended coverage, theft, vandalism and malicious mischief, earthquake, collapse, debris removal, demolition occasioned by enforcement of Laws and Regulations, water damage, and such other perils as may be specifically required by the Supplementary Conditions;

5.6.3. include expenses incurred in the repair or replacement of any insured property (including but not limited to fees and charges of engineers and architects);

5.6.4. cover materials and equipment stored at the site or at another location that was agreed to in writing by OWNER prior to being incorporated in the Work, provided that such materials and equipment have been included in an Application for Payment recommended by ENGINEER; and

5.6.5. be maintained in effect until final payment is made unless otherwise agreed to in writing by OWNER, CONTRACTOR and ENGINEER with thirty days written notice to each other additional insured to whom a certificate of insurance has been issued.

5.7. OWNER shall purchase and maintain such boiler and machinery insurance or additional property insurance as may be required by the Supplementary Conditions or Laws and Regulations which will include the interests of OWNER, CONTRACTOR, Subcontractors, ENGINEER, ENGINEER's Consultants and any other persons or entities identified in the Supplementary Conditions, each of whom is deemed to have an insurable interest and shall be listed as an insured or additional insured.

5.8. All the policies of insurance (and the certificates or other evidence thereof) required to be purchased and maintained by OWNER in accordance with paragraphs 5.6 and 5.7 will contain a provision or endorsement that the coverage afforded will not be cancelled or materially changed or renewal refused until at least thirty days' prior written notice has been given to OWNER and CONTRACTOR and to each other additional insured to whom a certificate of insurance has been issued and will contain waiver provisions in accordance with paragraph 5.11.

5.9. OWNER shall not be responsible for purchasing and maintaining any property insurance to protect the interests of CONTRACTOR, Subcontractors or others in the Work to the extent of any deductible amounts that are identified in the Supplementary Conditions. The risk of loss within such identified deductible amount, will be borne by CONTRACTOR, Subcontractor or others suffering any such loss and if any of them wishes property insurance coverage within the limits of such amounts, each may purchase and maintain it at the purchaser's own expense.

5.10. If CONTRACTOR requests in writing that other special insurance be included in the property insurance policies provided under paragraphs 5.6 or 5.7, OWNER shall, if possible, include such insurance, and the cost thereof will be charged to CONTRACTOR by appropriate Change Order or Written Amendment. Prior to commencement of the Work at the site, OWNER shall in writing advise CONTRACTOR whether or not such other insurance has been procured by OWNER.

5.11. *Waiver of Rights:*

5.11.1. OWNER and CONTRACTOR intend that all policies purchased in accordance with paragraphs 5.6 and 5.7 will protect OWNER, CONTRACTOR, Subcontractors, ENGINEER, ENGINEER's Consultants and all other persons or entities identified in the Supplementary Conditions to be listed as insureds or additional insureds in such policies and will provide primary coverage for all losses and damages caused by the perils covered thereby. All such policies shall contain provisions to the effect that in the event of payment of any loss or damage the insurers will have no rights of recovery against any of the insureds or additional insureds thereunder. OWNER and CONTRACTOR waive all rights against each other and their respective officers, directors, employees and agents for all losses and damages caused by, arising out of or resulting from any of the perils covered by such policies and any other property insurance applicable to the Work; and, in addition, waive all such rights against Subcontractors, ENGINEER, ENGINEER's Consultants and all other persons or entities identified in the Supplementary Conditions to be listed as insureds or additional insureds under such policies for losses and damages so caused. None of the above waivers shall extend to the rights that any party making such waiver may have to the proceeds of insurance held by OWNER as trustee or otherwise payable under any policy so issued.

5.11.2. In addition, OWNER waives all rights against CONTRACTOR, Subcontractors, ENGINEER, ENGINEER's Consultants and the officers, directors, employees and agents of any of them, for:

5.11.2.1. loss due to business interruption, loss of use or other consequential loss extending beyond direct physical loss or damage to OWNER's property or the Work caused by, arising out of or resulting from fire or other peril, whether or not insured by OWNER; and

5.11.2.2. loss or damage to the completed Project or part thereof caused by, arising out of or resulting from fire or other insured peril covered by any property insurance maintained on the completed Project or part thereof by OWNER during partial utilization pursuant to paragraph 14.10, after substantial completion pursuant to paragraph 14.8 or after final payment pursuant to paragraph 14.13.

Any insurance policy maintained by OWNER covering any loss, damage or consequential loss referred to in this paragraph 5.11.2 shall contain provisions to the effect that in the event of payment of any such loss, damage or consequential loss the insurers will have no rights of recovery against any of CONTRACTOR, Subcontractors, ENGINEER, ENGINEER's Consultants and the officers, directors, employees and agents of any of them.

Receipt and Application of Insurance Proceeds

5.12. Any insured loss under the policies of insurance required by paragraphs 5.6 and 5.7 will be adjusted with OWNER and made payable to OWNER as fiduciary for the insureds, as their interests may appear, subject to the requirements of any applicable mortgage clause and of paragraph 5.13. OWNER shall deposit in a separate account any money so received, and shall distribute it in accordance with such agreement as the parties in interest may reach. If no other special agreement is reached the damaged Work shall be repaired or replaced, the moneys so received applied on account thereof and the Work and the cost thereof covered by an appropriate Change Order or Written Amendment.

5.13. OWNER as fiduciary shall have power to adjust and settle any loss with the insurers unless one of the parties in interest shall object in writing within fifteen days after the occurrence of loss to OWNER's exercise of this power. If such objection be made, OWNER as fiduciary shall make settlement with the insurers in accordance with such agreement as the parties in interest may reach. If no such agreement among the parties in interest is reached, OWNER as fiduciary shall adjust and settle the loss with the insurers and, if required in writing by any party in interest, OWNER as fiduciary shall give bond for the proper performance of such duties.

Acceptance of Bonds and Insurance; Option to Replace:

5.14. If either party (OWNER or CONTRACTOR) has any objection to the coverage afforded by or other provisions of the Bonds or insurance required to be purchased and maintained by the other party in accordance with Article 5 on the basis of non-conformance with the Contract Documents, the objecting party shall so notify the other party in writing within ten days after receipt of the certificates (or other evidence requested) required by paragraph 2.7. OWNER and CONTRACTOR shall each provide to the other such additional information in respect of insurance provided as the other may reasonably request. If either party does not purchase or maintain all of the Bonds and insurance required of such party by the Contract Documents, such party shall notify the other party in writing of such failure to purchase prior to the start of the Work, or of such failure to maintain prior to any change in the required coverage. Without prejudice to any other right or remedy, the other party may elect to obtain equivalent Bonds or insurance to protect such other party's interests at the expense of the party who was

required to provide such coverage, and a Change Order shall be issued to adjust the Contract Price accordingly.

Partial Utilization—Property Insurance:

5.15. If OWNER finds it necessary to occupy or use a portion or portions of the Work prior to Substantial Completion of all the Work, such use or occupancy may be accomplished in accordance with paragraph 14.10; provided that no such use or occupancy shall commence before the insurers providing the property insurance have acknowledged notice thereof and in writing effected any changes in coverage necessitated thereby. The insurers providing the property insurance shall consent by endorsement on the policy or policies, but the property insurance shall not be cancelled or permitted to lapse on account of any such partial use or occupancy.

ARTICLE 6—CONTRACTOR'S RESPONSIBILITIES

Supervision and Superintendence:

6.1. CONTRACTOR shall supervise, inspect and direct the Work competently and efficiently, devoting such attention thereto and applying such skills and expertise as may be necessary to perform the Work in accordance with the Contract Documents. CONTRACTOR shall be solely responsible for the means, methods, techniques, sequences and procedures of construction, but CONTRACTOR shall not be responsible for the negligence of others in the design or specification of a specific means, method, technique, sequence or procedure of construction which is shown or indicated in and expressly required by the Contract Documents. CONTRACTOR shall be responsible to see that the completed Work complies accurately with the Contract Documents.

6.2. CONTRACTOR shall keep on the Work at all times during its progress a competent resident superintendent, who shall not be replaced without written notice to OWNER and ENGINEER except under extraordinary circumstances. The superintendent will be CONTRACTOR's representative at the site and shall have authority to act on behalf of CONTRACTOR. All communications to the superintendent shall be as binding as if given to CONTRACTOR.

Labor, Materials and Equipment:

6.3. CONTRACTOR shall provide competent, suitably qualified personnel to survey, lay out and construct the Work as required by the Contract Documents. CONTRACTOR shall at all times maintain good discipline and order at the site. Except as otherwise required for the safety or protection of persons or the Work or property at the site or adjacent thereto, and except as otherwise indicated in the Contract Documents, all Work at the site shall be performed during regular working hours and CONTRACTOR will not permit overtime work or the performance of Work on Saturday, Sunday or any legal holiday without OWNER's written consent given after prior written notice to ENGINEER.

6.4. Unless otherwise specified in the General Requirements, CONTRACTOR shall furnish and assume full responsibility for all materials, equipment, labor, transportation, construction equipment and machinery, tools, appliances, fuel, power, light, heat, telephone, water, sanitary facilities, temporary facilities and all other facilities and incidentals necessary for the furnishing, performance, testing, start-up and completion of the Work.

6.5. All materials and equipment shall be of good quality and new, except as otherwise provided in the Contract Documents. All warranties and guarantees specifically called for by the Specifications shall expressly run to the benefit of OWNER. If required by ENGINEER, CONTRACTOR shall furnish satisfactory evidence (including reports of required tests) as to the kind and quality of materials and equipment. All materials and equipment shall be applied, installed, connected, erected, used, cleaned and conditioned in accordance with instructions of the applicable Supplier, except as otherwise provided in the Contract Documents.

Progress Schedule:

6.6. CONTRACTOR shall adhere to the progress schedule established in accordance with paragraph 2.9 as it may be adjusted from time to time as provided below:

6.6.1. CONTRACTOR shall submit to ENGINEER for acceptance (to the extent indicated in paragraph 2.9) proposed adjustments in the progress schedule that will not change the Contract Times (or Milestones). Such adjustments will conform generally to the progress schedule then in effect and additionally will comply with any provisions of the General Requirements applicable thereto.

6.6.2. Proposed adjustments in the progress schedule that will change the Contract Times (or Milestones) shall be submitted in accordance with the requirements of paragraph 12.1. Such adjustments may only be made by a Change Order or Written Amendment in accordance with Article 12.

6.7. *Substitutes and "Or-Equal" Items:*

6.7.1. Whenever an item of material or equipment is specified or described in the Contract Documents by using the name of a proprietary item or the name of a particular Supplier, the specification or description is intended to establish the type, function and quality required. Unless the specification or description contains or is followed by words reading that no like, equivalent or "or-equal" item or no substitution is permitted, other items of material or equipment or material or equipment of other Suppliers may be accepted by ENGINEER under the following circumstances:

6.7.1.1. *"Or-Equal":* If in ENGINEER's sole discretion an item of material or equipment proposed by CONTRACTOR is functionally equal to that named and sufficiently similar so that no change in related Work will be required, it may be considered by ENGINEER as an "or-equal" item, in which case review and approval of the proposed item may, in ENGINEER's sole discretion, be accomplished without compliance with some or all of the requirements for acceptance of proposed substitute items.

6.7.1.2. *Substitute Items:* If in ENGINEER's sole discretion an item of material or equipment proposed by CONTRACTOR does not qualify as an "or-equal" item under subparagraph 6.7.1.1, it will be considered a proposed substitute item. CONTRACTOR shall submit sufficient information as provided below to allow ENGINEER to determine that the item of material or equipment proposed is essentially equivalent to that named and an acceptable substitute therefor. The procedure for review by the ENGINEER will include the following as supplemented in the General Requirements and as ENGINEER may decide is appropriate under the circumstances. Requests for review of proposed substitute items of material or equipment will not be accepted by ENGINEER from anyone other than CONTRACTOR. If CONTRACTOR wishes to furnish or use a substitute item of material or equipment, CONTRACTOR shall first make written application to ENGINEER for acceptance thereof, certifying that the proposed substitute will perform adequately the functions and achieve the results called for by the general design, be similar in substance to that specified and be suited to the same use as that specified. The application will state the extent, if any, to which the evaluation and acceptance of the proposed substitute will prejudice CONTRACTOR's achievement of Substantial Completion on time, whether or not acceptance of the substitute for use in the Work will require a change in any of the Contract Documents (or in the provisions of any other direct contract with OWNER for work on the Project) to adapt the design to the proposed substitute and whether or not incorporation or use of the substitute in connection with the Work is subject to payment of any license fee or royalty. All variations of the proposed substitute from that specified will be identified in the application and available maintenance, repair and replacement service will be indicated. The application will also contain an itemized estimate of all costs or credits that will result directly or indirectly from acceptance of such substitute, including costs of redesign and claims of other contractors affected by the resulting change, all of which will be considered by ENGINEER in evaluating the proposed substitute. ENGINEER may require CONTRACTOR to furnish additional data about the proposed substitute.

6.7.1.3. *CONTRACTOR's Expense:* All data to be provided by CONTRACTOR in support of any proposed "or-equal" or substitute item will be at CONTRACTOR's expense.

6.7.2. *Substitute Construction Methods or Procedures:* If a specific means, method, technique, sequence or procedure of construction is shown or indicated in and expressly required by the Contract Documents, CONTRACTOR may furnish or utilize a substitute means, method, technique, sequence or procedure of construction acceptable to ENGINEER. CONTRACTOR shall submit sufficient information to allow ENGINEER, in ENGINEER's sole discretion, to determine that the substitute proposed is equivalent to that expressly called for by the Contract Documents. The procedure for review by ENGINEER will be similar to that provided in subparagraph 6.7.1.2.

6.7.3. *Engineer's Evaluation:* ENGINEER will be allowed a reasonable time within which to evaluate each proposal or submittal made pursuant to paragraphs 6.7.1.2 and 6.7.2. ENGINEER will be the sole judge of acceptability. No "or-equal" or substitute will be ordered, installed or utilized without ENGINEER's prior written acceptance which will be evidenced by either a Change Order or an approved Shop Drawing. OWNER may require CONTRACTOR to furnish at CONTRACTOR's expense a special performance guarantee or other surety with respect to any "or-equal" or substitute. ENGINEER will record time required by ENGINEER and ENGINEER's Consultants in evaluating substitutes proposed or submitted by CONTRACTOR pursuant to paragraphs 6.7.1.2 and 6.7.2 and in making changes in the Contract Documents (or in the provisions of any other direct contract with OWNER for work on the Project) occasioned thereby. Whether or not ENGINEER accepts a substitute item so proposed or submitted by CONTRACTOR, CONTRACTOR shall reimburse OWNER for the charges of ENGINEER and ENGINEER's Consultants for evaluating each such proposed substitute item.

Concerning Subcontractors, Suppliers and Others:

6.8.1. CONTRACTOR shall not employ any Subcontractor, Supplier or other person or organization (including those acceptable to OWNER and ENGINEER as indicated in paragraph 6.8.2), whether initially or as a substitute, against whom OWNER or ENGINEER may have reasonable objection. CONTRACTOR shall not be required to employ any Subcontractor, Supplier or other person or organization to furnish or perform any of the Work against whom CONTRACTOR has reasonable objection.

6.8.2. If the Supplementary Conditions require the identity of certain Subcontractors, Suppliers or other persons or organizations (including those who are to furnish the principal items of materials or equipment) to be submitted to OWNER in advance of the specified date prior to the Effective Date of the Agreement for acceptance by OWNER and ENGINEER, and if CONTRACTOR has submitted a list thereof in accordance with the Supplementary Conditions, OWNER's or ENGINEER's acceptance (either in writing or by failing to make written objection thereto by the date indicated for acceptance or objection in the bidding documents or the Contract Documents) of any such Subcontractor, Supplier or other person or organization so identified may be revoked on the basis of reasonable objection after due investigation, in which case CONTRACTOR shall submit an acceptable substitute, the Contract Price will be adjusted by the difference in the cost occasioned by such

substitution and an appropriate Change Order will be issued or Written Amendment signed. No acceptance by OWNER or ENGINEER of any such Subcontractor, Supplier or other person or organization shall constitute a waiver of any right of OWNER or ENGINEER to reject *defective* Work.

6.9.1. CONTRACTOR shall be fully responsible to OWNER and ENGINEER for all acts and omissions of the Subcontractors, Suppliers and other persons and organizations performing or furnishing any of the Work under a direct or indirect contract with CONTRACTOR just as CONTRACTOR is responsible for CONTRACTOR's own acts and omissions. Nothing in the Contract Documents shall create for the benefit of any such Subcontractor, Supplier or other person or organization any contractual relationship between OWNER or ENGINEER and any such Subcontractor, Supplier or other person or organization, nor shall it create any obligation on the part of OWNER or ENGINEER to pay or to see to the payment of any moneys due any such Subcontractor, Supplier or other person or organization except as may otherwise be required by Laws and Regulations.

6.9.2. CONTRACTOR shall be solely responsible for scheduling and coordinating the Work of Subcontractors, Suppliers and other persons and organizations performing or furnishing any of the Work under a direct or indirect contract with CONTRACTOR. CONTRACTOR shall require all Subcontractors, Suppliers and such other persons and organizations performing or furnishing any of the Work to communicate with the ENGINEER through CONTRACTOR.

6.10. The divisions and sections of the Specifications and the identifications of any Drawings shall not control CONTRACTOR in dividing the Work among Subcontractors or Suppliers or delineating the Work to be performed by any specific trade.

6.11. All Work performed for CONTRACTOR by a Subcontractor or Supplier will be pursuant to an appropriate agreement between CONTRACTOR and the Subcontractor or Supplier which specifically binds the Subcontractor or Supplier to the applicable terms and conditions of the Contract Documents for the benefit of OWNER and ENGINEER. Whenever any such agreement is with a Subcontractor or Supplier who is listed as an additional insured on the property insurance provided in paragraph 5.6 or 5.7, the agreement between the CONTRACTOR and the Subcontractor or Supplier will contain provisions whereby the Subcontractor or Supplier waives all rights against OWNER, CONTRACTOR, ENGINEER, ENGINEER's Consultants and all other additional insureds for all losses and damages caused by, arising out of or resulting from any of the perils covered by such policies and any other property insurance applicable to the Work. If the insurers on any such policies require separate waiver forms to be signed by any Subcontractor or Supplier, CONTRACTOR will obtain the same.

Patent Fees and Royalties:

6.12. CONTRACTOR shall pay all license fees and royalties and assume all costs incident to the use in the performance of the Work or the incorporation in the Work of any invention, design, process, product or device which is the subject of patent rights or copyrights held by others. If a particular invention, design, process, product or device is specified in the Contract Documents for use in the performance of the Work and if to the actual knowledge of OWNER or ENGINEER its use is subject to patent rights or copyrights calling for the payment of any license fee or royalty to others, the existence of such rights shall be disclosed by OWNER in the Contract Documents. To the fullest extent permitted by Laws and Regulations, CONTRACTOR shall indemnify and hold harmless OWNER, ENGINEER, ENGINEER's Consultants and the officers, directors, employees, agents and other consultants of each and any of them from and against all claims, costs, losses and damages arising out of or resulting from any infringement of patent rights or copyrights incident to the use in the performance of the Work or resulting from the incorporation in the Work of any invention, design, process, product or device not specified in the Contract Documents.

Permits:

6.13. Unless otherwise provided in the Supplementary Conditions, CONTRACTOR shall obtain and pay for all construction permits and licenses. OWNER shall assist CONTRACTOR, when necessary, in obtaining such permits and licenses. CONTRACTOR shall pay all governmental charges and inspection fees necessary for the prosecution of the Work, which are applicable at the time of opening of Bids, or, if there are no Bids, on the Effective Date of the Agreement. CONTRACTOR shall pay all charges of utility owners for connections to the Work, and OWNER shall pay all charges of such utility owners for capital costs related thereto such as plant investment fees.

Laws and Regulations:

6.14.1. CONTRACTOR shall give all notices and comply with all Laws and Regulations applicable to furnishing and performance of the Work. Except where otherwise expressly required by applicable Laws and Regulations, neither OWNER nor ENGINEER shall be responsible for monitoring CONTRACTOR's compliance with any Laws or Regulations.

6.14.2. If CONTRACTOR performs any Work knowing or having reason to know that it is contrary to Laws or Regulations, CONTRACTOR shall bear all claims, costs, losses and damages caused by, arising out of or resulting therefrom; however, it shall not be CONTRACTOR's primary responsibility to make certain that the Specifications and Drawings are in accordance with Laws and Regulations, but this shall not relieve CONTRACTOR of CONTRACTOR's obligations under paragraph 3.3.2.

Taxes:

6.15. CONTRACTOR shall pay all sales, consumer, use and other similar taxes required to be paid by CONTRACTOR in accordance with the Laws and Regulations of the place of

the Project which are applicable during the performance of the Work.

Use of Premises:

6.16. CONTRACTOR shall confine construction equipment, the storage of materials and equipment and the operations of workers to the site and land and areas identified in and permitted by the Contract Documents and other land and areas permitted by Laws and Regulations, rights-of-way, permits and easements, and shall not unreasonably encumber the premises with construction equipment or other materials or equipment. CONTRACTOR shall assume full responsibility for any damage to any such land or area, or to the owner or occupant thereof or of any adjacent land or areas, resulting from the performance of the Work. Should any claim be made by any such owner or occupant because of the performance of the Work, CONTRACTOR shall promptly settle with such other party by negotiation or otherwise resolve the claim by arbitration or other dispute resolution proceeding or at law. CONTRACTOR shall, to the fullest extent permitted by Laws and Regulations, indemnify and hold harmless OWNER, ENGINEER, ENGINEER's Consultant and anyone directly or indirectly employed by any of them from and against all claims, costs, losses and damages arising out of or resulting from any claim or action, legal or equitable, brought by any such owner or occupant against OWNER, ENGINEER or any other party indemnified hereunder to the extent caused by or based upon CONTRACTOR's performance of the Work.

6.17. During the progress of the Work, CONTRACTOR shall keep the premises free from accumulations of waste materials, rubbish and other debris resulting from the Work. At the completion of the Work CONTRACTOR shall remove all waste materials, rubbish and debris from and about the premises as well as all tools, appliances, construction equipment and machinery and surplus materials. CONTRACTOR shall leave the site clean and ready for occupancy by OWNER at Substantial Completion of the Work. CONTRACTOR shall restore to original condition all property not designated for alteration by the Contract Documents.

6.18. CONTRACTOR shall not load nor permit any part of any structure to be loaded in any manner that will endanger the structure, nor shall CONTRACTOR subject any part of the Work or adjacent property to stresses or pressures that will endanger it.

Record Documents:

6.19. CONTRACTOR shall maintain in a safe place at the site one record copy of all Drawings, Specifications, Addenda, Written Amendments, Change Orders, Work Change Directives, Field Orders and written interpretations and clarifications (issued pursuant to paragraph 9.4) in good order and annotated to show all changes made during construction. These record documents together with all approved Samples and a counterpart of all approved Shop Drawings will be available to ENGINEER for reference. Upon completion of the Work, these record documents, Samples and Shop Drawings will be delivered to ENGINEER for OWNER.

Safety and Protection:

6.20. CONTRACTOR shall be responsible for initiating, maintaining and supervising all safety precautions and programs in connection with the Work. CONTRACTOR shall take all necessary precautions for the safety of, and shall provide the necessary protection to prevent damage, injury or loss to:

6.20.1. all persons on the Work site or who may be affected by the Work;

6.20.2. all the Work and materials and equipment to be incorporated therein, whether in storage on or off the site; and

6.20.3. other property at the site or adjacent thereto, including trees, shrubs, lawns, walks, pavements, roadways, structures, utilities and Underground Facilities not designated for removal, relocation or replacement in the course of construction.

CONTRACTOR shall comply with all applicable Laws and Regulations of any public body having jurisdiction for safety of persons or property or to protect them from damage, injury or loss; and shall erect and maintain all necessary safeguards for such safety and protection. CONTRACTOR shall notify owners of adjacent property and of Underground Facilities and utility owners when prosecution of the Work may affect them, and shall cooperate with them in the protection, removal, relocation and replacement of their property. All damage, injury or loss to any property referred to in paragraph 6.20.2 or 6.20.3 caused, directly or indirectly, in whole or in part, by CONTRACTOR, any Subcontractor, Supplier or any other person or organization directly or indirectly employed by any of them to perform or furnish any of the Work or anyone for whose acts any of them may be liable, shall be remedied by CONTRACTOR (except damage or loss attributable to the fault of Drawings or Specifications or to the acts or omissions of OWNER or ENGINEER or ENGINEER's Consultant or anyone employed by any of them or anyone for whose acts any of them may be liable, and not attributable, directly or indirectly, in whole or in part, to the fault or negligence of CONTRACTOR or any Subcontractor, Supplier or other person or organization directly or indirectly employed by any of them). CONTRACTOR's duties and responsibilities for safety and for protection of the Work shall continue until such time as all the Work is completed and ENGINEER has issued a notice to OWNER and CONTRACTOR in accordance with paragraph 14.13 that the Work is acceptable (except as otherwise expressly provided in connection with Substantial Completion).

Safety Representative:

6.21. CONTRACTOR shall designate a qualified and experienced safety representative at the site whose duties and

[This page was left blank intentionally.]

SECTION 00800

SUPPLEMENTARY CONDITIONS

ARTICLE	TITLE	PAGE NO.
	GENERAL	3
SC-1	DEFINITIONS	3
SC-2.2	COPIES OF DOCUMENTS	3
SC-2.6.3	BEFORE STARTING CONSTRUCTION	3
SC-5.1	PAYMENT AND PERFORMANCE BONDS	4
SC-5.3	CONTRACTOR'S INSURANCE	4
SC-5.5	OWNER'S LIABILITY INSURANCE	5
SC-5.6	PROPERTY INSURANCE	5
SC-5.11.1	WAIVER OF RIGHTS	6
SC-5.12	RECEIPT AND APPLICATION OF PROCEEDS	6
SC-5.14	ACCEPTANCE OF INSURANCE	6
SC-5.15	PARTIAL UTILIZATION - PROPERTY INSURANCE	6
SC-5.16	INDEMNITY	6
SC-6.1	SUPERVISION AND SUPERINTENDENCE	6
SC-6.2	SUPERVISION AND SUPERINTENDENCE	7
SC-6.3.1	LABOR MATERIALS AND EQUIPMENT	7
SC-6.3.2	LABOR MATERIALS AND EQUIPMENT	7
SC-6.4.1	LABOR MATERIALS AND EQUIPMENT	7
SC-6.8.1	CONCERNING SUBCONTRACTORS, SUPPLIERS AND OTHERS	7
SC-6.9.1	CONCERNING SUBCONTRACTORS, SUPPLIERS AND OTHERS	8
SC-6.14.1	LAWS AND REGULATIONS	8
SC-6.24.2	SHOP DRAWINGS AND SAMPLES	8
SC-6.25.3	SUBMITTAL PROCEDURES	8
SC-6.26	SUBMITTAL PROCEDURES	8
SC-6.27	SUBMITTAL PROCEDURE	9
SC-6.28	SHOP DRAWINGS AND SAMPLES	9
SC-7.1	RELATED WORK AT SITE	9
SC-8.5	OWNER'S RESPONSIBILITIES	9
SC-9.3	RESIDENT PROJECT REPRESENTATIVE	9
SC-9.4	CLARIFICATIONS AND INTERPRETATIONS	9
SC-9.5	AUTHORIZED VARIATIONS IN WORK	9
SC-9.10	DETERMINATION FOR UNIT PRICES	10
SC-9.11	DECISIONS ON DISPUTES	10
SC-9.12	DECISIONS ON DISPUTES	10
SC-9.13	LIMITATIONS OF ENGINEER'S RESPONSIBILITIES	10
SC-10.2	CHANGES IN THE WORK	10
SC-10.4.3	CHANGES IN THE WORK	10
SC-11.2	CHANGE OF CONTRACT PRICE	10
SC-11.8.3	CASH ALLOWANCES	10
SC-11.9.2	UNIT PRICE WORK	11
SC-11.9.3	UNIT PRICE WORK	11

SUPPLEMENTARY CONDITIONS (CONT'D)

ARTICLE	TITLE	PAGE NO.
SC-12.1	CHANGE OF CONTRACT TIME	11
SC-12.3	CONTRACT TIME	12
SC-13.4	TESTS	12
SC-14.1	SCHEDULE OF VALUES	16
SC-14.2.1	PAYMENT FOR STORED MATERIALS	16
SC-14.4	REVIEW OF APPLICATION FOR PROGRESS PAYMENT	16
SC-14.8	SUBSTANTIAL COMPLETION	16
SC-14.13	FINAL PAYMENT AND ACCEPTANCE	16
SC-15.2	OWNER MAY TERMINATE	16
SC-15.4	OWNER MAY TERMINATE	17
SC-16	ARBITRATION	17
SC-17	MISCELLANEOUS	17
SC-18	AFFIDAVIT BY GENERAL CONTRACTOR	17
SC-21	ADMINISTRATION OF THE CONTRACT	17
SC-22	PROJECT SIGNS	17

ATTACHMENTS

AFFIDAVIT	18
GUARANTEE	19
CONTRACTOR'S CERTIFICATION	20
CONTRACTOR'S APPLICATION FOR PAYMENT	21

SECTION 00800

SUPPLEMENTARY CONDITIONS

GENERAL

These Supplementary Conditions amend or supplement the Standard General Conditions of the Construction Contract and other provisions of the Contract Documents, as indicated below. All provisions which are not so amended or supplemented remain in full force and effect. In the event the Standard General Conditions of the Construction Contract conflict with the Supplementary Conditions, the Supplementary Conditions prevail.

All pronouns or adjectives (e.g., he, she, his, her) used in these Contract Documents, Invitation to Bid, Instructions to Bidders, and Proposal shall be considered as neutral references, and not in reference to a specific sex.

SC-1 DEFINITIONS

Add or amend the Definitions in the Standard General Conditions to these documents as follows:

ENGINEER

Add the following:

Wherever in these documents the work "ENGINEER" appears, it shall be understood to mean the OWNER's contractors and their authorized representatives, acting either directly or indirectly as authorized agents of the OWNER.

OWNER

Add the following:

Wherever in these documents the work "OWNER" appears, it shall be understood to mean Pasco County Board of County Commissioners, whose address is 7530 Little Road, New Port Richey, Florida 34654.

SC-2.2 COPIES OF DOCUMENTS

Amend the first sentence of Paragraph 2.2 of the General Conditions to read as follows: Change "ten copies" to "five copies".

SC-2.6.3 BEFORE STARTING CONSTRUCTION

Add to Paragraph 2.6.3 of the General Conditions the following:

An "Application for Payment" form is provided at the end of this Section.

SC-5.1 PAYMENT AND PERFORMANCE BONDS

Add the following:

CONTRACTOR's obligation to provide - CONTRACTOR shall provide OWNER with a payment and a performing bond in the amount of the contract price. Said bonds shall be substantially the same form as in Sections 00610 and 00620. Additionally, bonds must meet the following specifications:

A. The Surety Company shall have a currently valid Certificate of Authority, issued by the State of Florida Department of Insurance, authorizing it to write surety bonds in the State of Florida.

B. The Surety Company shall have a currently valid Certificate of Authority issued by the United States Department of Treasury under Sections 9304 to 9308 of Title 31 of the United States Code.

C. The Surety Company shall be in full compliance with the provisions of the Florida Insurance code.

D. The Surety Company shall have at least twice the minimum surplus and capital required by the Florida Insurance Code at the time the invitation to bid is issued.

E. If the contract award amount exceeds $500,000.00, the Surety Company shall also comply with the following provision:

The Surety Company shall have at least the following rating in the latest issue of Best's Key Rating Guide:

CONTRACT AMOUNT	POLICYHOLDER'S RATING	REQUIRED FINANCIAL RATING
$ 500,000 to $ 1,000,000	A	Class IV
$ 1,000,000 to $ 2,500,000	A	Class V
$ 2,500,000 to $ 5,000,000	A	Class VI
$ 5,000,000 to $10,000,000	A	Class VII
$10,000,000 to $25,000,000	A	Class VIII
$25,000,000 to $50,000,000	A	Class IX
$50,000,000 to $75,000,000	A	Class X

F. If the Contract award amount does not exceed $500,000.00, the Surety Company will be required to comply with the minimum requirements set forth in Section 287.0935, Florida Statutes.

SC-5.3 CONTRACTOR'S INSURANCE

The CONTRACTOR shall not commence work until he has obtained all the insurance required by this section nor shall the CONTRACTOR allow any Subcontractor to commence work until proper insurance has been obtained by the Subcontractor. All such insurance must be approved by the OWNER.

The CONTRACTOR and all Subcontractors shall take out, and maintain during the life of this Contract, Workers' compensation for all of his employees employed at the project site. In case any employee is engaged in hazardous work on the site who is not protected under the Workers' Compensation statute, the CONTRACTOR or Subcontractor for whom the employee works shall provide for adequate coverage to protect these employees.

The CONTRACTOR shall take out and maintain during the life of the Contract such Public Liability and Property Damage Insurance as will protect him, any Subcontractor he employs, and the OWNER and ENGINEER from all

claims for damage for personal injury, including accidental death, as well as claims for property damage. Coverage shall also be provided for contractual liability and completed operations. The amount of this insurance shall be as follows:

1. Comprehensive General Liability: $500,000 each person bodily injury, $1,000,000 each occurrence bodily injury, $250,000 each person property damage, $500,000 each occurrence property damage.

2. Comprehensive Automobile Liability: $500,000 each person bodily injury, $1,000,000 each occurrence bodily injury, $250,000 each person property damage, $500,000 each occurrence property damage.

3a. Contractual Liability:

$500,000/$1,000,000 bodily injury, $250,000/$500,000 property damage limits.

3b. Broad Form Property Damage:

$500,000/$1,000,000 bodily injury, $250,000/$500,000 property damage limits.

3c. OWNER's and CONTRACTOR's Protective:

$500,000/$1,000,000 bodily injury, $250,000/$500,000 property damage limits.

3d. Products and Completed Operations:

$500,000/$1,000,000 bodily injury, $250,000/$500,000 property damage limits.

The CONTRACTOR shall provide the OWNER satisfactory proof of the required insurance prior to any construction, in the form of a "Certificate of Insurance", listing the OWNER as additional insured. Certificates of Insurance shall provide that the insurance company agrees that, if the policy be canceled or materially changed by the company during its term, thirty (30) days' written notice prior thereto will be given to the OWNER. The Certificate shall be issued on Pasco County's standard form available from the Purchasing Department or the ENGINEER.

Insurance required under this section must be written by an insurer authorized to do business in the State of Florida, and also have an "A" policyholder's rating and a financial rating of at least Class XI in accordance with the most current Best's rating.

In addition to the Certificate of Insurance required herein, the CONTRACTOR shall provide the OWNER with copies of all policies required herein. All policies required hereunder, with the exception of Workers Compensation, shall name Pasco County as additional insured.

SC-5.5 OWNER'S LIABILITY INSURANCE

Delete Paragraph 5.5 of the General Conditions in its entirety.

SC-5.6 PROPERTY INSURANCE

Delete Paragraphs 5.6, 5.7, 5.8, 5.9, and 5.10 of the General Conditions in their entirety.

SC-5.11.1 WAIVER OF RIGHTS

Delete Paragraphs 5.11.1 and 5.11.2 of the General Conditions in their entirety.

SC-5.12 RECEIPT AND APPLICATION OF PROCEEDS

Delete Paragraphs 5.12 and 5.13 of the General Conditions in their entirety.

SC-5.14 ACCEPTANCE OF INSURANCE

Delete Paragraph 5.14 of the General Conditions in its entirety.

SC-5.15 PARTIAL UTILIZATION - PROPERTY INSURANCE

Delete Paragraph 5.15 of the General Conditions in its entirety.

SC-5.16 INDEMNITY

In consideration of One Hundred and 00/100 Dollars ($100.00), the sufficiency and receipt of which is hereby acknowledged by CONTRACTOR to be included and paid for in the contract price, and to the fullest extent permitted by law, CONTRACTOR shall indemnify, defend, and hold harmless the OWNER and all of its agents and employees, from any claim, loss, damage, cost, charge, or expense, including attorney's fees and costs, arising out of any act, action, neglect, or omission during the performance of the contract or work performed thereunder, whether direct or indirect, and whether or not due to or caused by negligence of the OWNER or any of its officers, agents, or employees, except that CONTRACTOR will not be liable under this provision for damages arising out of the injury or damage to persons or property directly caused or resulting from the sole negligence of the OWNER or any of its agents or employees.

CONTRACTOR's obligation to defend and indemnify shall not be excused because of CONTRACTOR's inability to evaluate liability or because CONTRACTOR evaluates liability and determines CONTRACTOR is not liable or determine the OWNER is solely negligent. Only a final adjudication or judgment finding the OWNER solely negligent shall excuse performance of this provision by CONTRACTOR. If a judgment finding the OWNER solely negligent is appealed and the finding of sole negligence is reversed, CONTRACTOR will be obligated to indemnify the OWNER for the cost of appeal(s). CONTRACTOR shall pay all costs and fees related to this obligation and its enforcement by the OWNER.

This provision shall also pertain to any claims brought against the OWNER by any employee of CONTRACTOR, subcontractor, or anyone directly or indirectly employed by any of them.

CONTRACTOR's obligation under this provision shall not be limited in any way to the agreed upon contract price as shown in this agreement or CONTRACTOR's limit of or lack of sufficient insurance protection.

SC-6.1 SUPERVISION AND SUPERINTENDENCE

Amend the first section of Paragraph 6.1 of the General Conditions starting in Line 7 by striking out "..., but CONTRACTOR shall not be responsible for the negligence of others in the design or selection of a specific means, methods, technique, sequence or procedure of construction which is indicated in and required by the Contract Documents".

SC-6.2 SUPERVISION AND SUPERINTENDENCE

Amend the first sentence of Paragraph 6.2 of the General Conditions by adding "and the job site" after "on the Work...".

SC-6.3.1 LABOR MATERIALS AND EQUIPMENT

Add a new Paragraph immediately after Paragraph 6.3 of the General Conditions which is to read as follows:

6.3.1 Regular working hours are defined as up to 8 hours per day, Monday through Friday, beginning no earlier than 7:00 A.M. and ending no later than 7:00 P.M., excluding holidays. Whenever the CONTRACTOR is performing any part of the work with the exception of equipment maintenance and cleanup, OWNER's representation and/or inspection will be required. Requests to work other than regular working hours must be submitted in writing to the ENGINEER, at least 48 hours prior to any proposed weekend work or scheduled extended work weeks, to give the OWNER ample time to arrange for representation and/or inspection during those periods. Periodic unscheduled overtime on weekdays will be permitted provided that two hours notice is provided to the ENGINEER. Maintenance and cleanup may be performed during hours other than regular working hours.

SC-6.3.2 LABOR MATERIALS AND EQUIPMENT

Add a new paragraph immediately after paragraph 6.3.1 of the General Conditions which is to read as follows:

6.3.2 CONTRACTOR shall reimburse the OWNER for additional engineering and/or inspection costs incurred as a result of overtime work in excess of the regular working hours stipulated in Article SC-6.3.1. At OWNER's option, overtime costs may either be deducted from the CONTRACTOR's monthly payment request or deducted from the CONTRACTOR's retention prior to release of final payment. Overtime costs for the OWNER's personnel shall be based on the individual's current overtime wage rate. Overtime costs for personnel employed by the ENGINEER or OWNER's independent testing laboratory shall be calculated in accordance with the terms of their respective contracts with the OWNER.

SC-6.4.1 LABOR MATERIALS AND EQUIPMENT

Add a new paragraph immediately after paragraph 6.4 of the General Conditions which is to read as follows:

6.4.1 All potable water for testing, flushing and construction shall be furnished by the CONTRACTOR. It may be available by connecting to the OWNER's water system at a point approved by the OWNER. The OWNER shall charge the CONTRACTOR for water used in performing the above functions in accordance with the OWNER's established rate schedule. There shall be installed in each and every connection to the OWNER's water supply a backflow preventer meeting the requirements of ANSI A40.6, latest revision at each and every connection. CONTRACTOR shall be required to meter all water used.

SC-6.8.1 CONCERNING SUBCONTRACTORS, SUPPLIERS AND OTHERS

Add the following:

The CONTRACTOR shall perform on the site and with his own organization, labor equivalent to at least 50 percent of the total amount of the work to be performed under this Contract. If, during the progress of the work hereunder, the

CONTRACTOR requests a reduction of such percentage, and the OWNER determines that it would be to the OWNER's advantage, the percentage may be reduced; PROVIDED prior written approval of such reduction is obtained by the CONTRACTOR from the OWNER.

SC-6.9.1 CONCERNING SUBCONTRACTORS, SUPPLIERS AND OTHERS

Add the following to Paragraph 6.9 of the General Conditions:

"OWNER or ENGINEER may furnish to any such Subcontractor, Supplier, or other person or organization, to the extent practicable, evidence of amounts paid to CONTRACTOR in accordance with CONTRACTOR's Applications for Payment."

SC-6.14.1 LAWS AND REGULATIONS

Amend Paragraph 6.14.1 of the General Conditions to include the following:

CONTRACTOR agrees to comply with all applicable Federal, State, and Local Laws, Regulations, and Ordinances including but not limited to the following:

1. Title VI of the 1984 Civil Rights Act and related regulations.
2. Title VII of the 1964 Civil Rights Act as amended by the Equal Employment Opportunity Act which prohibits discrimination in employment.
3. Age Discrimination Act of 1973.
4. Contract work Hours and Safety Standards Act.
5. Section 504 of the Rehabilitation Act prohibiting discrimination in the employment of the handicapped.
6. Fair Labor Standards Act.
7. Chapter 112, Florida Statutes prohibiting conflicts of interest in the procurement of contracts with a governmental agency.

SC-6.24.2 SHOP DRAWINGS AND SAMPLES

Amend the first sentence of Paragraph 6.24.2 of the General Conditions by striking out the following words: "and approval".

SC-6.25.3 SUBMITTAL PROCEDURES

Amend Paragraph 6.25.3 of the General Conditions by striking out the following words: "and approval".

SC-6.26 SUBMITTAL PROCEDURES

Amend Paragraph 6.26 of the General Conditions by:

Striking out "and approval" within this section.

SC-6.27 SUBMITTAL PROCEDURE

Amend Paragraph 6.27 of the General Conditions by striking out "and approval".

SC-6.28 SHOP DRAWINGS AND SAMPLES

Amend Paragraph 6.28 of the General Conditions by striking out "and approval".

SC-7.1 RELATED WORK AT SITE

Amend Paragraph 7.1 of the General Conditions by striking out "and (ii) Contractor....".

SC-8.5 OWNER'S RESPONSIBILITIES

Delete Paragraph 8.5 of the General Conditions in its entirety.

SC-9.3 RESIDENT PROJECT REPRESENTATIVE

Delete Paragraph 9.3 of the General Conditions in its entirety and insert the following in its place:

OWNER will furnish a Resident Project Representative to assist in observing the performance of the work. The duties, responsibilities and limitations of authority of this Resident Project Representative and assistants are set forth in the attached pages to these Supplemental Conditions.

SC-9.4 CLARIFICATIONS AND INTERPRETATIONS

Amend Paragraph 9.4 of the General Conditions by addition of the following:

Apparent inconsistencies between two or more sections of the Contract documents shall be reported to the ENGINEER immediately, for resolution. Where possible, precedence shall be given in the following order:

1. Contract
2. Supplementary Conditions
3. Instructions to Bidders
4. General Conditions
5. Specifications
6. Drawings
   a. Detail Drawings
   b. General Drawings
   c. Figure Dimensions
   d. Scale Dimensions

SC-9.5 AUTHORIZED VARIATIONS IN WORK

Delete Section 9.5 of the General Conditions in its entirety.

SC-9.10 DETERMINATION FOR UNIT PRICES

Amend Paragraph 9.10 of the General Conditions in its entirety and insert the following in its place:

9.10 ENGINEER will have authority to determine the actual quantities and classifications of items of Unit Price Work performed by CONTRACTOR, and the written decisions of ENGINEER on such matters will be final, binding on OWNER and CONTRACTOR and not subject to appeal (except as modified by ENGINEER to reflect changed factual conditions).

SC-9.11 DECISIONS ON DISPUTES

Amend Section 9.11 of the General Conditions by striking out the first two sentences "ENGINEER will be ..., which ENGINEER will render in writing within a reasonable time."

SC-9.12 DECISIONS ON DISPUTES

Delete Paragraph 9.12 of the General Conditions in its entirety.

SC-9.13 LIMITATIONS OF ENGINEER'S RESPONSIBILITIES

Delete Paragraph 9.13 of the General Conditions in its entirety.

SC-10.2 CHANGES IN THE WORK

Delete Paragraph 10.2 of the General Conditions in its entirety.

SC-10.4.3 CHANGES IN THE WORK

Delete Paragraph 10.4.3 of the General Conditions in its entirety.

SC-11.2 CHANGE OF CONTRACT PRICE

Amend Paragraph 11.2 of the General Conditions by striking the last two sentences "All claims for adjustment ..., in accordance with this Paragraph 11.2".

SC-11.8.3 CASH ALLOWANCES

Add a new paragraph immediately after Paragraph 11.8.2 of the General Conditions which is to read as follows:

11.8.3 The CONTRACTOR shall not proceed on any additional work to be covered by allowances until authorized in writing by the ENGINEER.

SC-11.9.2 UNIT PRICE WORK

11.9.2 Amend 11.9.2 by adding the following:

However, the estimated quantities listed under "Est. Qty." of the proposal are estimates as indicated. For purposes of compensation for photo scale error, field realignment and other variables that may affect total quantities installed, the quantities may be overestimated. The CONTRACTOR is responsible for field verifying the actual needed quantities for determining his overhead and profit and for material ordering.

SC-11.9.3 UNIT PRICE WORK

11.9.3.4 Add the following new paragraph:

If the actual installed quantities vary by more than twenty-five (25) percent over the estimated quantity, the OWNER reserves the right to negotiate a revised, reduced unit cost for that amount of work which exceeds twenty-five (25) percent over the estimated quantity. The revised unit cost will be established in a Change Order.

SC-12.1 CHANGE OF CONTRACT TIME

Delete Paragraph 12.1 of the General Conditions and insert the following Paragraphs as 12.1 and 12.1.1:

12.1 CLAIMS FOR TIME EXTENSION/NO DAMAGES FOR TIME DELAY

Claims for an increase in the Contract Time will be made by presenting a Request for Delay (RFD) form to the ENGINEER within seven (7) days of the occurrence giving rise to the claim. All claims for an increase in the contract time are waived if not so presented. RFD forms will be supplied to the CONTRACTOR by the OWNER or the ENGINEER.

The sole and exclusive manner of increasing the Contract Time due to some occurrence giving rise to the presentation of a RFD form is by Change Order. Timely presentation of a RFD form is a prerequisite to obtaining a Change Order. The Change Order shall address any and all claims based on said occurrence. With respect thereto, the CONTRACTOR agrees that its exclusive remedy for delays in the performance of the Contract caused by events beyond its control, including delays claimed to be caused by the OWNER or ENGINEER or attributable to the OWNER or ENGINEER and including claims based on breach of contract or negligence, shall be an extension of the Contract time. CONTRACTOR hereby waives any and all other claims based on said occurrence which are not addressed by the Change Order. Nothing contained herein will prevent the parties from increasing the Contract time by mutual agreement.

12.1.1 The OWNER's liability to CONTRACTOR for any claims other than claims for extension of the Contract time, as described herein, arising out of or related to the subject matter of this Contract, whether in contract or tort, including, but not limited to, claims for payment by the OWNER of the costs, damages or losses because of changed conditions under which the work is to be performed, or for additional work, shall be governed by the following provisions: 1) all claims must be submitted as a Request for Change Order in the manner as provided herein; 2) the CONTRACTOR must submit a Notice of claim to OWNER and to the ENGINEER within twenty (20) days of when the CONTRACTOR was or should have been aware of the occurrence of the event giving rise to the claim; (the presentation of a timely RFD form, as described in 12.1 above, will constitute the Notice of Claim for an extension of this Contract time with all other provisions of this Paragraph applying accordingly)

and 3) within twenty (20) days of submitting its Notice of Claim, the CONTRACTOR shall submit to the OWNER its Request for Change Order, which shall include a written statement of details of the claim, including a description of the work affected.

The CONTRACTOR agrees that the OWNER shall not be liable for any claim that the CONTRACTOR fails to submit as a Request for Change Order, or as a timely presented RFD form, as provided in these Paragraphs.

After receipt of a Request for Change Order, the OWNER, in consultation with the ENGINEER, shall deliver to the CONTRACTOR within thirty (30) days, after receipt of request, its written determination of the claim.

The CONTRACTOR's exclusive remedy for delays in performance of the construction caused by events beyond its control, including delays claimed to be caused by or attributable to the OWNER or the ENGINEER, including claims based on breach of contract or negligence, shall be a claim, or a RFD form, submitted in compliance with the above and preceding Paragraphs. The CONTRACTOR expressly agrees that the forgoing constitutes its sole and exclusive remedies for delays and changes in such work and eliminates any other remedies for claim for increase in the Contract price, delays, changes in the work, damages, losses, or additional compensation.

SC-12.3 CONTRACT TIME

Amend Paragraph 12.3 of the General Conditions by adding the following to Sentence 1 ". . . and 12.1.1 as set forth in the Supplementary Conditions."

SC-13.4 TESTS

The OWNER shall specify the testing laboratory to be used and will pay for initial tests. Any retesting which must be done as a result of failure will be paid for by the CONTRACTOR.

STATE OF FLORIDA:
SS
COUNTY OF PASCO:

FINAL RELEASE OF LIEN

KNOW ALL MEN BY THESE PRESENTS, that _____ _____ for and in consideration of the sum of _____ Dollars ($_____) paid to _ _____ by _____ receipt of which is hereby acknowledged do(es) hereby release and quit-claim to _____ _____ rights, claims, or demands of any kind whatsoever which _____ _____ now has (have) or might have against the property, building, and/or improvements, on account of labor performed, material furnished, and/or for any incidental expense for the construction of _____ _____ _____ thereon or in otherwise improving said property situated as above-described.

WITNESSES:

_____ SIGNED: _____

_____ TITLE: _____

SWORN AND SUBSCRIBED TO BEFORE ME this ____ day of _____, 19__.

_____

Notary Public

State of Florida at Large
My Commission Expires _____

Recommended by _____ Date _____
Engineer

Accepted by _____ Date _____
Contractor

Authorized by _____ Date _____
Pasco County Board of County Commissioners

Approved as to form _____ Date _____
Pasco County Attorney

_____ Date _____
Pasco County Clerk of the Circuit Court

CONTRACT CHANGE ORDER

CHANGE ORDER NO. _____

Project: _____
Project No.: _____ Bid No.: _____ Contract Date: _____
Contractor: _____

Condition: The change described herein shall be governed by the terms and conditions of the contract, and shall not in any way alter the terms of the contract, but shall hereinafter be a part of the contract.

The following changes are hereby made to the Contract Documents: _____
_____

Justification: _____

CHANGE TO CONTRACT PRICE
Original Contract Price: $_____

Current Contract Price (as adjusted by previous Change Orders): $_____

The Contract Price due to this Change Order will be: $_____

CHANGE TO CONTRACT TIME
Previous time of completion: _____ calendar days.

Previous completion date: _____

The Contract Time by this Change Order will be: (increased) (decreased) by _____ calendar days. The new date for completion of all work under the Contract will be _____.

Approvals Required: To be effective, this Change Order must be approved by Pasco County if it changes the scope or price of the project.

SC-14.1 SCHEDULE OF VALUES

Amend Paragraph 14.1 of the General Conditions by inserting "by proposal" in the first sentence between "established" and "as" to read "The schedule of values established by proposal as provided ...".

SC-14.2.1 PAYMENT FOR STORE MATERIALS

14.2.1 Add the following new paragraph:

If the CONTRACTOR has provided, and the OWNER has accepted, a Performance Bond as part of the Contract, then evidence of payment for stored materials (i.e., Bill of Sale, canceled check, etc.) will not be required, unless requested by OWNER, until Application for Final Payment is submitted.

SC-14.4 REVIEW OF APPLICATION FOR PROGRESS PAYMENT

Amend Paragraph 14.4 of the General Conditions by changing the first word in the last sentence from "Ten" to "Thirty".

SC-14.8 SUBSTANTIAL COMPLETION

Amend Paragraph 14.8 of the General Conditions by striking out the sixth sentence "OWNER shall have seven ... or attached list." and the last sentence "Unless OWNER and ... CONTRACTOR until final payment."

SC-14.13 FINAL PAYMENT AND ACCEPTANCE

Amend Paragraph 14.13 of the General Conditions by inserting " ... and Certification of Completion when required ..." in the first sentence to read as follows: "... work during construction and final inspection and Certification of Completion when required, and ENGINEER's review of the final ..."

SC-15.2 OWNER MAY TERMINATE

Amend Paragraph 15.2 of the General Conditions by adding the following:

15.2.5 If a CONTRACTOR commences a voluntary case under any chapter of the Bankruptcy Code (Title 11, United States Code), as now or hereafter in effect, or if CONTRACTOR takes any equivalent or similar action by filling a petition or otherwise under any other federal or state law in effect at such time relating to the bankruptcy or insolvency;

15.2.6 If a petition is filed against CONTRACTOR under any chapter of the Bankruptcy Code, as now or hereafter in effect at the time of filing, or if a petition is filed seeking any such equivalent or similar relief against CONTRACTOR under any other federal or state law in effect at the time relating to bankruptcy or insolvency;

15.2.7 If CONTRACTOR makes a general assignment for the benefit of creditors;

15.2.8 If a trustee, receiver, custodian or agent of CONTRACTOR is appointed under applicable law or under contract, whose appointment or authority to take charge of property of CONTRACTOR is for the purpose of enforcing a Lien against such property or for the purpose of general administration of such property for the benefit of CONTRACTOR's creditors;

15.2.9 If CONTRACTOR admits, in writing, an inability to pay its debts generally as they become due;

15.2.10 The OWNER may terminate this agreement at any time without cause upon 30 days notice to the CONTRACTOR.

SC-15.4 OWNER MAY TERMINATE

Amend Paragraph 15.4 by deleting the following from the second sentence " ... plus reasonable termination expense ... and arbitration costs).", and add the following sentences to Paragraph 15.4:

"In no way shall expenses exceed total cost of compensation as prorated to the date of termination specified by this agreement, as may be amended from time to time. Further it is specifically agreed that termination cost shall not include lost anticipated profits of any kind."

SC-16 ARBITRATION

Delete "Article 16 - ARBITRATION" of the General Conditions in its entirety, as well as any reference to "arbitration" in the General Conditions.

SC-17 MISCELLANEOUS

Add Paragraph 17.6, "Discovery of Latent Defects or Fraud". As to latent defects and fraud, the applicable statute of limitations shall commence upon the date of discovery or date discovery of the defect should reasonably have occurred.

SC-18 AFFIDAVIT BY GENERAL CONTRACTOR

CONTRACTOR shall complete an affidavit upon completion of construction and submit it along with the final payment request. A form of such affidavit is enclosed in these Supplemental Conditions.

SC-21 ADMINISTRATION OF THE CONTRACT

The provisions of the General Conditions 00700 dealing with authority of the ENGINEER to act, including, but limited to, Article 9 - ENGINEER's Status During Construction are amended to the extent that all decisions of the ENGINEER must be decided and directed jointly by the OWNER and ENGINEER.

SC-22 PROJECT SIGNS

Project signs shall be provided in number and configuration as indicated in Section 01000.

SUPPLEMENTARY CONDITIONS

AFFIDAVIT

STATE OF FLORIDA:
SS
COUNTY OF PASCO:

Before me, the undersigned authority, authorized to administer oaths and take acknowledgments, personally appeared _____ who, after being first duly sworn, upon oath deposes and says that all lienors contracting directly with or directly employed by (him, them, it) and that all taxes imposed by Chapter 212, Florida Statutes (Sales and Use Tax Act) as amended, have been paid and discharged, and that all bills, wages, fees, claims, and other charges incurred by _____
_____
_____
_____ in connection with the construction of _____
_____ have been paid in full, except as noted below.

WITNESSES:

_____ SIGNED: _____

_____ BY: _____

SWORN AND SUBSCRIBED TO BEFORE ME this ____ day of _____, 19__.

_____

Notary Public

State of Florida at Large
My Commission Expires _____

GUARANTEE

The Undersigned _____ hereby guarantees all work performed in accordance with terms of the contract dated _____ between _____ _____ and _____ for work consisting of _ _____ against defects due to faulty workmanship or materials for a period of three hundred sixty-five (365) days from date hereof. During the period of the guarantee, the contractor agrees to make all repairs necessitated by reason of faulty workmanship or materials at no cost to the owner; subject to the following additional conditions:

A) This guarantee is in addition to factory warranties covering certain equipment where applicable under contract.

B) Nothing herein contained shall serve to modify or limit the obligations of the contractor to faithfully fulfill and complete its obligations under the contract.

C) Specifically excluded from this guarantee is maintenance of equipment or repair of any damage caused by normal wear and tear, fire, windstorm, or other casualties.

D) Special Conditions: _____
_____
_____

WITNESSES:

_____ SIGNED: _____

_____ TITLE: _____

SWORN AND SUBSCRIBED TO BEFORE ME this _____ day of _____, 19__.

_____

Notary Public

State of Florida at Large
My Commission Expires _____

CONTRACTOR'S CERTIFICATION

As authorized agent for the CONTRACTOR, I the undersigned hereby certify that this is a true and correct statement of work performed and materials delivered under this application for payment, and there are no vendor's liens, mechanics' liens, or other liens or rights to liens against this job, and that all received under this contract have been applied to discharge in full all of the CONTRACTOR's obligations reflected in prior applications for payment, and that hourly wages paid to employees on this project for the period of this application are in accordance with the requirements of the contract documents.

Submitted For Payment:
CONTRACTOR

By: _____

Date: _____

Recommended For Payment:
LAW ENGINEERING AND ENVIRONMENTAL SERVICES, INC.

By: _____

Date: _____

Approved For Payment:
PASCO COUNTY

By: _____

Date: _____

CONTRACTOR'S APPLICATION FOR PAYMENT

DESCRIPTION: Intermediate Cover for Cell A-1, West Pasco Landfill	
OWNER: Pasco County	**ENGINEER:** Law Eng. & Env. Services, Inc.
CONTRACTOR:	**PHONE #:**
CONTRACT #:	**REQUEST DATE:**
PAYMENT #:	**ACCT. #:**

CONTRACT DATA
BIDS RECEIVED:
CONTRACT DATE:
NOTICE TO PROCEED:
CALENDAR DAYS TO COMPLETE:
ORIGINAL COMPLETION DATE:
DAYS EXT. ALLOWED TO DATE:
NEW COMPLETION DATE:
ORIGINAL CONTRACT AMOUNT:
ADJUSTMENTS TO DATE:
REVISED CONTRACT AMOUNT:
PERCENTAGE COMPLETE ($):
PERCENTAGE COMPLETE (TIME):
PERCENTAGE COMPLETE (ENG.):

SUMMARY OF PROJECT STATUS
TOTAL WORK COMPLETED:
MATERIAL STORE ON SITE:
TOTAL EARNED TO DATE:
LESS RETAINAGE:
BALANCE:
LESS PREVIOUS PAYMENTS:
LESS P.R. OVERTIME:
AMOUNT DUE THIS PERIOD:
PERCENTAGE OF RETENTION:

RECEIVED
SEP 29 1997
D E P

LAW
ENGINEERING AND ENVIRONMENTAL SERVICES, INC.

PROJECT MANUAL
(TECHNICAL SPECIFICATIONS)
FOR
EXPANSION OF CITIZENS DROP OFF AREA
AT
RESOURCE RECOVERY FACILITY

BID NO. 97-168

Prepared For:

PASCO COUNTY
BOARD OF COUNTY COMMISSIONERS
UTILITY SERVICES
NEW PORT RICHEY, FLORIDA 34654

Prepared By:

LAW ENGINEERING AND ENVIRONMENTAL SERVICES, INC.
4919 WEST LAUREL STREET
TAMPA, FLORIDA

SEPTEMBER 1997

H:\USERS\40140\REPORT\SPECS\T4170255.V2

LAW PROJECT 40141-7-0255 **COPY NO. 3** **VOLUME 2 OF 2**

TABLE OF CONTENTS

VOLUME 2 **PAGE**

DIVISION 1 - GENERAL REQUIREMENTS

Section 01000	General Requirements	01000

DIVISION 2 - SITE WORK

Section 02010	Temporary Erosion and Sediment Control	02010
Section 02110	Site Preparation	02110
Section 02200	Earthwork & Grading	02200
Section 02485	Sodding and Seeding	02485
Section 02715	PVC and RC Pipe	02715

DIVISION 3 - CONCRETE

Section 03300	Concrete	03300

DIVISION 5 - METALS

Section 05520	Handrails	05520
Section 05530	Grates	05530

SECTION 01000

GENERAL REQUIREMENTS

PART 1 - GENERAL

1.01 SCOPE

A. Description of Work: The project consists of expanding the existing Citizens Drop Off Area and adding trench drains and other work shown in the drawings. The work included herein consists of furnishing all labor, materials, equipment and incidentals required.

B. Coordinate and schedule all phases of the Work of the Contract Documents with OWNER, ENGINEER, subcontractors, material suppliers and other parties as necessary to ensure the smooth and orderly transition of separate phases, timely placement of items and materials, complete cooperation between parties and proper execution of the Work.

C. Provide special attention and precautions as specified herein when coordinating and scheduling portions of the Work.

D. Maintain the site in a standard of cleanliness throughout the construction period as described in this Section.

1.02 SUBMITTALS

A. After checking and verifying all quantities, dimensions, specified performance criteria, installation requirements, materials and similar data, submit samples, certifications and other product data to the ENGINEER for review.

B. ENGINEER's review will be only for conformance with the design concept of the Work and for compliance with the information given in these specifications.

C. Make submittals far enough in advance of scheduled dates for commencements, installations or execution to allow for reviews, for securing necessary approvals, and for possible revisions and resubmittals.

D. CONTRACTOR shall be responsible for delays resulting from incomplete submittals.

1.03 PROJECT RECORD DOCUMENTS

A. Maintain on site, one set of the following record documents; record actual revisions to the Work:

1. Contract Drawings.

2. Specifications.

3. Addenda.

4. Change Orders and other Modifications to the Contract.

5. Reviewed shop drawings, product data, and samples.

B. Store Record Documents separate from documents used for construction.

C. Record information concurrent with construction progress.

D. Specifications: Legibly mark and record at each Product Section description of actual Products installed, including the following:

1. Manufacturer's name and product model and number.

2. Product substitutions or alternates utilized.

3. Changes made by Addenda and Modifications.

E. Record Documents and Shop Drawings: Legibly mark each item to record actual construction including:

1. Measured depths of foundations in relation to finish (first) (main) floor datum.

2. Measured horizontal and vertical locations of underground utilities and appurtenances, referenced to permanent surface improvements.

3. Measured locations of internal utilities and appurtenances concealed in construction, referenced to visible and accessible features of the Work.

4. Field changes of dimension and detail.

F. Delete ENGINEER title block (and seal) from all documents.

G. Submit documents to ENGINEER with claim for final Application for Payment. This payment will not be processed until record documents are deemed satisfactory by the ENGINEER.

No separate payment will be made for preparation of record drawings.

1.04 APPLICATION FOR PAYMENT

Refer to Volume 1 of the Project Manual.

PART 2 - PRODUCTS

2.01 SUBMITTALS

A. The CONTRACTOR shall submit to the ENGINEER for review and exception, test reports and data on materials and equipment specified elsewhere in the Specifications and in the Contract Drawings.

B. It is CONTRACTOR's responsibility to check all drawings, data and samples prepared by or for him before submitting them to the ENGINEER for review. Each and every copy of the Drawings and data shall bear CONTRACTOR's stamp showing that they have been so checked. All submittals shall be 8½ inches by 11 inches in size (larger sheets shall be folded to 8½ inches by 11 inches and inserted into pre 3-hole punched plastic holder) and 3-hole punched for insertion into three ring binders. ALL SUBMITTALS shall be numbered sequentially.

C. The CONTRACTOR shall submit to the ENGINEER all drawings and schedules sufficiently in advance of construction requirements to provide no less than ten (10) calendar days for checking and appropriate action from the time the ENGINEER receives them. The CONTRACTOR shall not begin any of the work covered by the submittal until a revision or correction thereof has been reviewed and returned to him, by the ENGINEER, with no exceptions taken.

D. The CONTRACTOR shall submit five (5) copies of the submittal for the ENGINEER plus the number of copies which the CONTRACTOR requires. The ENGINEER will retain four (4) sets.

E. The CONTRACTOR shall be responsible for and bear all cost of damages which may result from the ordering of any material or from proceeding with any part of work prior to the completion of the review by ENGINEER of the necessary Shop Drawings.

F. The CONTRACTOR shall submit drawings and/or data for the following:

1. Pavement Base
2. Concrete, Reinforcing Steel, Joint Sealer, etc.
3. Trench Drain
4. Pipe and Culverts
5. Electrical Control Panels, Disconnect, Controls, etc.
6. Rail Construction and Painting
7. Gazebo
8. Junction Boxes
9. Concrete Surface Hardener

Refer to Sections of these Specifications for additional requirements.

2.02 SUBSTITUTIONS

A. The OWNER and ENGINEER will consider formal requests from the CONTRACTOR for substitutions of products in place of those specified (unless otherwise noted in specification).

B. Submit five copies of request for substitution. Include in request:

1. Complete data substantiating compliance of proposed substitution with Contract Documents.

2. For products:
   a. Product identification, including manufacturer's name and address.
   b. Manufacturer's literature:
      1) Product description
      2) Performance and test data
      3) Reference standards

c. Samples.
d. Name and address of similar projects on which product was used, and date of installation.

3. For construction methods:
a. Detailed description of proposed method.
b. Drawings illustrating methods.

4. Itemized comparison of proposed substitution with product or method specified.

5. Data relating to changes in construction schedule.

6. Relation to separate contracts.

7. Accurate cost data on proposed substitution in comparison with product or method specified.

PART 3 - EXECUTION

3.01 COORDINATION AND SCHEDULING

A. Prior to commencement of the Work, a complete construction schedule shall be established by the CONTRACTOR. The schedule shall show the proposed program of operations. This construction program shall provide for orderly performance of the Work in accordance with the specific requirements stated in these specifications.

B. OWNER will occupy premises and continue normal business operations throughout the construction period. CONTRACTOR shall be responsible for coordinating with own-site OWNER'S personnel to schedule Work in stages as necessary to ensure proper execution of the Work with minimal disruption to existing traffic patterns and business activity.

C. The ENGINEER and OWNER shall be given 48 hours prior notice whenever they must be present to observe equipment testing, partial completion, etc.

D. The CONTRACTOR shall not work Sundays.

E. The lines of communication are: CONTRACTOR to ENGINEER to OWNER and shall be strictly adhered to.

F. The installation of the rails atop the wall will be done after the facility is completed to the extent rolloffs can be positioned. At that time, the exact height of the top rail may vary from the drawings.

3.02 PROJECT MEETINGS

A. The ENGINEER or OWNER shall schedule and administer pre-construction meetings, periodic progress meetings, and specially called meetings throughout the progress of the work:

1. Prepare agenda for meetings.

2. Make physical arrangements for meetings.

3. Preside at meetings.

4. Record the minutes; include significant proceedings and decisions.

5. Reproduce and distribute copies of minutes within five working days after each meetings:
   a. To participants in the meeting.
   b. To parties affected by decisions made at the meeting.

B. Representatives of contractors, subcontractors and suppliers attending meetings shall be qualified and authorized to act on behalf of the entity each represents.

C. The CONTRACTOR shall attend meetings to ascertain that work is expedited consistent with Contract Documents and construction schedules.

3.03 PROPERTY USE AND DAMAGE

A. CONTRACTOR's operations on the OWNER's premises, including the storage of materials, shall be confined to areas authorized by the OWNER.

B. The CONTRACTOR's personnel shall abide by the OWNER's regulations concerning entry into and exit from the project.

C. The CONTRACTOR shall be responsible for all damages to adjoining private or public property resulting from CONTRACTOR's operations, and shall hold OWNER and ENGINEER free from all claims or suits due to any such damage.

D. The CONTRACTOR shall be responsible for all damages to facilities of the OWNER due to negligence or carelessness on the part of the CONTRACTOR. The OWNER will deduct any costs incurred due to such damages from payments to the CONTRACTOR. The OWNER and ENGINEER shall not be liable for loss or damage of CONTRACTOR's tools, equipment or materials due to theft, pilferage, vandalism or any other cause whatsoever.

E. The CONTRACTOR shall not be allowed entry to the site for storing materials or equipment or to begin construction without authorization from the OWNER or ENGINEER.

3.04 PROTECTION

A. Temporary Barriers: Provide, properly locate, and maintain adequate barriers and warning signs for work areas which will be closed to traffic during performance of the Work.

B. Property: Provide adequate protection to building areas, pavement areas not included in the Work, and all other property not directly involved in the performance of the Work. Repair or replace damaged property to the satisfaction of the OWNER.

C. Open Excavation and Work Areas

1. Provide, properly locate and maintain adequate barriers or covers for open pits, tank excavations and pipe trenches during the performance of the Work.

2. Provide shoring and bracing of excavations as necessary for safety of personnel and protection of Work in compliance with requirements of governmental agencies having jurisdiction. Neither the OWNER nor the ENGINEER shall be held liable for any damages or injury resulting from accidental failure of temporary shoring and bracing.

A. Utilities

Fresh water and electricity are available at the site. Should either of these two utilities be required, the CONTRACTOR will be required to make the necessary arrangements with the OWNER.

1. Perform Work with caution in areas known or suspected of containing buried utilities so that they are not damaged. There are number pipes, cables, etc., on this site. The OWNER will provide locations to the extent the data are available. It shall be the CONTRACTOR's sole responsibility to field locate potential conflicts prior to excavating.

2. Repair or replace damaged utilities to a condition equivalent to that before damage occurred, at no additional cost to OWNER.

3.05 CLEANING

A. Progress Cleaning

1. Do not allow accumulation of scrap, debris, waste material, and other items not required for construction of the Work.

2. Daily, and more often if necessary, inspect the site and pick up all scrap, debris and waste material. Remove such items to a place designated by the OWNER for their storage.

3. Provide adequate storage for all items awaiting removal from the job site, observing requirements for fire protection and protection of the ecology.

4. At least weekly, and more often if necessary, completely remove all scrap, debris and waste material from the job site.

B. Final Cleaning

1. "Clean" for the purpose of this Article, and except as may be specifically provided otherwise, shall be interpreted as meaning the level of cleanliness generally provided by skilled cleaners using commercial quality pavement maintenance equipment and materials.

2. Prior to completion of the Work, remove from the job site all tools, surplus materials, equipment, scrap, debris and waste.

3. Unless otherwise specifically directed by the OWNER, broom clean paved areas on the site and public paved areas adjacent to the site. Completely remove resultant debris.

4. Final cleaning shall be scheduled with OWNER's representative.

3.06 PROJECT SIGN

The location and configuration of the project sign will be decided at the pre-construction meeting.

3.07 PERMITTING

The OWNER is responsible for obtaining any permits from Florida Department of Environmental Protection and Southwest Florida Water Management District. The CONTRACTOR shall obtain all other permits for constructing the facilities.

3.08 CONSTRUCTION STAKING

It shall be the CONTRACTOR's sole responsibility for all construction staking associated with the work, including right-of-way line. The ENGINEER and OWNER will provide available data to the CONTRACTOR to facilitate said construction staking.

SECTION 02010

TEMPORARY EROSION AND SEDIMENT CONTROL

PART 1 - GENERAL

1.01 SCOPE

A. The work specified in this Section consists of designing, providing, maintaining, and removing temporary erosion and sedimentation controls as necessary.

B. Temporary erosion controls include, but are not limited to: grassing, mulching, netting, watering, reseeding on-site surfaces, reseeding spoil and borrow area surfaces, and providing interceptor ditches at ends of berms and at those locations which will ensure that erosion during construction will be either eliminated or maintained within acceptable limits as established by the County or other regulatory agencies having jurisdiction.

C. Temporary sedimentation controls include, but are not limited to: silt dams, traps and appurtenances at the foot of sloped surfaces which will ensure that sedimentation pollution will be either eliminated or maintained within acceptable limits as established by the County or other regulatory agencies having jurisdiction.

D. CONTRACTOR is responsible for providing effective temporary erosion and sediment control measures during construction or until final controls become effective.

E. The work specified in this Section shall be in compliance with Section 104 of the FDOT "Standard Specifications for Road and Bridge Construction". Section 104 will govern if any conflict arises between the contents of this specification and the FDOT procedures.

1.02 PROVISIONS FOR CONTROLLING EROSION

Provisions for Controlling Erosion: Sufficient precautions shall be taken during construction to minimize the run-off of polluting substances such as silt, clay, fuels, oils, bitumens, calcium chloride, or other polluting materials harmful to humans, fish, or other life, into the supplies and surface waters of the state. Control measures must be adequate to assure that turbidity in the receiving water will not be increased more than 10 nephelometric turbidity units (NTU), or as otherwise required by the state or other controlling body, in water used for public waster supply or fish unless limits have been established for the particular water. In surface water used for other purposes, the turbidity must not exceed 25 NTU unless otherwise permitted. Special precautions shall be taken in the use of construction equipment to prevent operations which promote erosion.

1.03 REFERENCE DOCUMENTS

A. Florida Department of Transportation (FDOT), "Roadway and Traffic Design Standards"

B. FDOT, "Standard Specifications for Road and Bridge Construction".

PART 2 - PRODUCT

2.01 MATERIAL

A. Sod is specified in Section 02485.

B. Seed is specified in Section 02485.

C. Mulch is specified in Section 02485.

D. Fertilizer is specified in Section 02485.

E. Watering is specified in Section 02485.

F. Netting is specified in Section 02485.

G. Sedimentation barriers, silt fences, and turbidity barriers as defined in FDOT drawings 102 & 103 of the "Roadway and Traffic Design Standards" manual and Section 104 of the FDOT "Specifications for Road and Bridge Construction".

PART 3 - EXECUTION

3.01 EROSION CONTROL

A. CONTRACTOR is to begin restoration to any area directly affected by the construction within 48 hours of testing and approval. Should substantial erosion occur, within 48 hours, the CONTRACTOR will be responsible for restoring those areas to their natural state before proceeding with construction.

B. Minimum procedures for grassing slopes less than 3:1 shall be in accordance with section 570 of FDOT "Standard Specifications for Road and Bridge Construction" and as listed below:

1. Scarify slopes to a depth of not less than six inches and remove large clods, rocks, stumps, debris, and roots larger than 1/2-inch in diameter.

2. Sow seed within twenty-four (24) hours after the ground is scarified with a mechanical hand seeder.

3. Apply mulch loosely and to a thickness of between 3/4-inch and 1-1/2-inches.

4. Apply netting over mulched areas on sloped surfaces and stake.

5. Roll and water seeded areas in a manner which will enhance sprouting of seeds and growing of grass. Areas which exhibit unsatisfactory growth, in the opinion of the ENGINEER/OWNER within one month shall be reseeded. Backfill and seed eroded areas.

C. Minimum procedures for sodding slopes 3:1 or steeper are: Shall be sodded in accordance with the provisions of Section 575 of the FDOT "Standard Specifications for Road and Bridge Construction".

3.02 SEDIMENTATION CONTROL

A. Silt Fencing:

1. Install and maintain a "Type III" FDOT standard silt fence when shown on Contract Drawings.

2. The silt fence shall be installed between the construction area and the down side of the slope.

B. Turbidity Barrier:

1. Install a FDOT standard "Staked Turbidity Barrier" to protect all storm-water conveyance and storage areas.

2. Where the direction of flow is uncertain, a turbidity barrier will be required on each side.

C. Locate all silt fencing within the designated right of way, easement, or utility corridor as applicable.

D. Maintain silt fence in good condition until restoration of area is complete and approved by the ENGINEER.

E. It is the CONTRACTOR's responsibility to provide bypassing routes or detours of storm water or streams as necessary to prevent flooding damage or obstruction to adjacent lands due to construction or sedimentation control.

3.03 PERFORMANCE

A. The CONTRACTOR must undertake all efforts to prevent any erosion or turbid water from being discharged off site, into wetlands, and/or into waters of the state.

B. Should any of the temporary erosion and sediment control measures employed by the CONTRACTOR fail to produce results which comply with the requirements of the State of Florida and local government agency, the CONTRACTOR shall immediately take whatever steps are necessary to correct the deficiency at his own expense.

SECTION 02110

SITE PREPARATION

PART 1 - GENERAL

1.01 SCOPE

A. This section covers clearing, and grubbing the site.

PART 2 - PRODUCTS (Not used)

PART 3 - EXECUTION

3.01 CLEARING

A. The surface of the ground, for the area to be cleared and grubbed shall be completely cleared of all timber, brush, stumps, roots, grass, weeds, rubbish, and all other objectionable obstructions resting on or protruding through the surface of the ground. Clearing operations shall be conducted so as to prevent damage to existing structures and installations, and to those under construction, so as to provide for the safety of employees and others.

3.02 GRUBBING

A. Grubbing shall consist of the complete removal of all stumps, roots larger than 1 inch in diameter, matted roots, brush, timber, logs, and any other organic or metallic debris not suitable for foundation purposes, resting on, under or protruding through the surface of the ground to a depth of 18 inches below the subgrade. All depressions excavated below the original ground surface for or by the removal of such objects, shall be refilled as described in Section 02200 of these specifications.

3.03 DISPOSAL OF CLEARED AND GRUBBED MATERIAL

A. The CONTRACTOR shall dispose of all material and debris from the clearing and grubbing operation by hauling such material and debris on site, as directed by the OWNER of the site. The cost of disposal (including hauling) of cleared and grubbed material and debris shall be considered a subsidiary obligation of the CONTRACTOR; the cost of which shall be included in the prices bid for the various classes of work.

3.04 SPRINKLER SYSTEM

A. The CONTRACTOR shall remove the existing water sprinkler system as necessary to construct the expanded area to the north of the existing drop off area. The CONTRACTOR shall take care not to damage the sprinkler system beyond the aerial extent needed for construction.

SECTION 02200

EARTHWORK & GRADING

PART 1 - GENERAL

1.01 SCOPE

A. Included in this section is all excavation, filling, and finishing necessary for the construction, preparation and completion of the expansion to the Citizens Drop Off, addition of trench drains and other work shown in the drawings. The work shall be done in accordance with the required contours, spot elevations and cross sections shown on the drawings or as directed by the ENGINEER.

PART 2 - PRODUCTS

2.01 FILL

A. Fill material for roads, berms shall conform to Unified Soil Classification SP, SM or SC. The borrow material shall be clean and free of rocks or cemented nodules greater than one inch in diameter, lumber, roots, trash or other debris. Provided the material meets the requirements allotted above, the CONTRACTOR may use material excavated at the construction site.

B. Submittal - Provide certified report signed and sealed by a professional geotechnical engineer that off-site borrow material meets the specifications and is available in sufficient quantities and meets the requirements describe above.

C. Base and Subbase - Materials shall conform to FDOT Standard Specifications for Road and Bridge Construction; Section 911.

PART 3 - EXECUTION

3.01 EXCAVATION

A. The CONTRACTOR shall perform all excavation necessary to accomplish the construction indicated on the plans. All clean and usable excavated material not required for fill or embankment shall be deposited on the project site as directed by the OWNER or his ENGINEER. The CONTRACTOR shall do all shoring necessary to perform and protect the excavation and as necessary for the safety of the workers and any existing facilities. Wherever excavations are made below the grades indicated on the plans, clean soils shall be used to restore the area to the proper grade and shall be compacted in accordance with this section of the specifications.

3.02 DEWATERING

A. Dewater all excavations as necessary to maintain stability of the excavations and to allow for proper compaction of backfill.

3.03 UNSUITABLE MATERIAL

A. Where muck, rock, clay or other material within the limits of construction is, in the opinion of the ENGINEER, unsuitable in its original position, the CONTRACTOR shall excavate such material and backfill the excavated area with suitable material, as defined in Paragraph 2.01, which shall be compacted and shaped to conform to the required section.

3.04 FILL

A. Fill shall be placed in successive uniform lifts of 12 inches, measured loose or as approved by the ENGINEER. Each lift shall be compacted in accordance with the requirements specified in this section prior to placing the next successive lift. Prior to placing any fill for berms, the surface to receive the fill shall be plowed or scarified to a depth of 12 inches.

3.05 STRUCTURE BACKFILL

A. All structure backfill material shall be thoroughly compacted in lifts not to exceed twelve inches (prior to compaction) and brought to an elevation above the finished grade sufficient to allow for settlement. Prior to placing backfill, the areas around structures upon which the backfill is to be placed shall be cleaned of all trash and debris of any nature. The CONTRACTOR shall be responsible for performing the compaction so as to prevent damage to structures.

3.06 PIPE BACKFILL

A. Trenches shall be backfilled from the bottom of the trench to the centerline of the pipe with soil free from rocks or stones, placed in twelve-inch layers and compacted, as specified below, using the appropriate equipment, under and on each side of the pipe and between the pipe and wall of trench. Backfilling material shall be deposited in the trench for its full width simultaneously on each side of the pipe.

B. Over Pipe: From the centerline of the pipe, fittings and appurtenances, to an elevation one foot above the top of the pipe backfill material shall be as specified in A, above, and shall be compacted by use of tampers.

3.07 COMPACTION

A. Areas to be compacted shall be moistened to within + or - 3 percent of optimum moisture and compacted by either rolling, tamping or any other method approved by the ENGINEER in order to obtain the desired density. All fill material, including backfill embankment and pavement base, shall be compacted to densities of not less than 98% of modified Proctor maximum dry density (ASTM D-1557).

3.08 PAVEMENT BASE

A. The pavement base shall be constructed as required in Section 200 of FDOT (LBR 40) in conformance with grades, thicknesses and typical cross-sections shown on the Drawings.

PART 4 - QUALITY ASSURANCE PROGRAM

4.01 TESTING LABORATORY

A. The OWNER will retain an independent soil testing laboratory who has specific equipment to provide test results specified below in a timely manner. The ENGINEER or OWNER shall select the location for sampling. The CONTRACTOR shall coordinate and schedule all tests as required by the plans and specifications. The CONTRACTOR shall instruct the testing laboratory to forward copies of all test reports to the ENGINEER who will provide them to the OWNER.

4.02 WORKMANSHIP

A. The CONTRACTOR is responsible for correction of portions of the work which do not conform to the specified project requirements at no cost to the OWNER. If, in the ENGINEER's opinion, additional density tests (beyond those predetermined in this quality assurance program) are required, such test shall be made as directed by the OWNER or ENGINEER and paid for by the CONTRACTOR.

4.03 TESTING DURING CONSTRUCTION

A. Grain size analyses or percent fines determinations shall be conducted on three samples from each lift installed at locations, as directed by the ENGINEER or OWNER. Tests shall be conducted in accordance with ASTM D-1140 to determine the percentage by dry weight.

B. Field density and moisture content shall be determined on three samples from each lift or every 50 feet and trench drain outfall pipe (both sides) and once per lift in structure backfill. Field density and moisture content may be determined using the Nuclear and Speedy determination method or by following either the drive cylinder (ASTM D-2937), sand-cone (ASTM D-1558) or oven-drying (ASTM D-2216) methods.

C. Any sample or area tested shall be rejected, removed and replaced as directed by the ENGINEER, if it does not meet the requirements of the technical specifications. Reconstructed areas shall have feathered, overlapping edges that tie into adjacent areas.

SECTION 02485

SODDING AND SEEDING

PART 1 - GENERAL

1.01 SCOPE

A. The CONTRACTOR shall furnish all materials and labor necessary for establishing grass as shown on the drawings. It is the intent of this specification that all disturbed areas, not otherwise protected, or located with the drop off area, be sodded or seeded (with mulching). Sodding shall be used on all slopes 3:1 or steeper and the remaining areas shall be seeded unless otherwise noted in drawings.

1.02 STORAGE OF MATERIALS

A. The CONTRACTOR shall provide space for storage of sod prior to placement in a manner that will not endanger or restrict pedestrian or vehicular traffic.

PART 2 - PRODUCTS

2.01 SOD

A. Sod shall be in accordance with Sections 575-1 through 575-2 of the FDOT Specifications. Sod being replaced in existing sodded areas shall be replaced in kind. Sod in new areas shall be Argentina Bahia.

2.02 SEED

A. Seed shall be in accordance with Sections 570-1 through 570-3 of the FDOT Specifications and shall be Argentina Bahia.

2.03 MULCH

A. Mulch shall be in accordance with Sections 570-1 through 570-3 of the FDOT Specifications.

PART 3 - EXECUTION

3.01 SODDING

A. Sodding shall be in accordance with Sections 575-3 of the FDOT Specifications.

3.02 SEEDING

A. Seeding shall be in accordance with Sections 570-4 through 570-5 of the FDOT Specifications.

3.03 MULCHING

A. Mulching shall be in accordance with Section 570-4 of the FDOT Specifications.

3.04 MAINTENANCE

A. Sodding and seeding shall be maintained in accordance with Sections 570-5 and 575 of the FDOT Specifications.

3.05 REPAIRS TO GRASSED AREAS DISTURBED BY CONTRACTOR'S OPERATIONS

A. Grassed areas established under this contract and all grassed areas damaged by the CONTRACTOR's operation shall be repaired at once by proper soil preparation, fertilizing, and resodding or reseeding, in accordance with these Specifications.

3.06 GUARANTEE PERIOD AND FINAL ACCEPTANCE

A. All grassed areas shall be guaranteed by the CONTRACTOR for the period from installation to one year past provisional acceptance and the CONTRACTOR obtain a maintenance bond for that period.

B. During this guarantee period the CONTRACTOR shall be responsible for watering, fertilizing, mulching, erosion control, etc. The CONTRACTOR shall inspect the grassed areas no less than once per month and shall submit a written report to the OWNER concerning the condition of these areas. At any time during the guarantee period, if erosion is reported, the OWNER will contact the CONTRACTOR. The CONTRACTOR shall respond immediately and repair the eroded surfaces.

C. At the end of the guarantee period, inspection will be made by the OWNER upon written request submitted by the CONTRACTOR at least ten (10) days before the anticipated date. Grassed areas not demonstrating satisfactory stands as outlined above, as determined by the OWNER, shall be renovated, resodded or reseeded, and maintained meeting all requirements as specified herein.

SECTION 02715

PVC AND RC PIPE

PART 1 - GENERAL

1.01 SCOPE

A. This section refers to the trench drain outfall pipe and the storm-water culverts. The CONTRACTOR shall furnish all labor, materials, equipment and main incidentals required for complete installation of pipe, fittings and all appurtenances as shown on the Drawings and as specified herein.

PART 2 - PRODUCTS

2.01 TRENCH DRAIN OUTFALL PIPE

A. Provide Schedule 40 PVC pipe.

B. The pipe lengths shall be joined with PVC cement after cleaning with a standard PVC cleaner. Both the cement and cleaner will be as approved by the pipe manufacturer.

2.03 CULVERTS

A. Reinforced concrete culvert pipe shall be Class III and conform to the requirements of DOT Standard Specifications, Section 941, Article 941-1. Pipe joints shall be sealed with round rubber gaskets and shall meet the requirements of DOT Standard Specifications, Section 942, Article 942-1.

PART 3 - EXECUTION

3.01 STORAGE AND HANDLING

A. The CONTRACTOR shall use care in handling, in storage and installation of the pipe. Storage of pipe on the job site shall be done in accordance with the pipe manufacturer's recommendation. Under no circumstances shall pipe be dropped into the trench.

B. Pipe shall be laid to line and grade shown on the drawings with bedding and backfill as shown on the drawings.

C. The CONTRACTOR shall minimize the amount of sand and debris collected on the inside of the pipe while handling, prior to placement.

D. PVC Pipe shall be stored on clean, level ground to prevent undue scratching or gouging. The location of field storage shall not be in areas where water can accumulate. The pallets shall be oriented so as not to form a dam, creating the ponding of water.

E. The pallets shall not be stacked more than three high. Furthermore, they shall be stacked in such a way that access for conformance testing is possible.

F. The handling of the PVC pipe shall be in such a manner that the pipe is not damaged by dragging it over sharp and cutting objects. The maximum allowable depth of cuts, scratches or gouges on the exterior of the pipe is 10% of wall thickness. The interior pipe surface shall be free of cuts, gouges or scratches.

G. Sections of pipe with cuts, scratches or gouges shall be removed completely.

3.02 INSTALLATION

A. The pipe shall be installed in accordance with the instructions of the manufacturer, as shown on the drawings and as specified herein.

B. The CONTRACTOR shall provide adequate equipment for the removal of storm or subsurface waters which may accumulate in the excavated areas. CONTRACTOR is responsible for obtaining any permits for dewatering. If subsurface water is encountered, the CONTRACTOR shall utilize approved means to adequately dewater the excavation so that it will be dry for working and pipe laying. A wellpoint system or other approved dewatering method shall be utilized if necessary to maintain the excavation in a dry condition for preparation of the trench bottom and for pipe laying. All existing improvements such as pavements, conduits, poles, pipes and other structures shall be carefully supported and fully protected from injury and, in case of damage, they shall be restored without compensation. Existing utilities and other underground obstructions are shown on the plans but the accuracy of the locations and depths is not guaranteed. The CONTRACTOR shall be responsible for damages to these existing utilities and shall, in case they are damaged, restore them to their original condition at his own expense.

C. Trench Excavation: Trenches shall be excavated to such width as may be necessary for proper laying of the pipe with banks as nearly vertical as practicable. The bottom of trenches shall be accurately graded to provide uniform bearing on undisturbed soil for the entire length of each section of pipe. Depressions shall be excavated after the trench bottom has been graded and such holes and depressions shall not be made larger than is necessary for properly making the particular type of joint. The width of the trench at and below the top of the pipe shall not be greater than necessary to permit jointing and thorough tamping of the backfill around the pipe. The width of the trench above the level may be as wide as necessary for sheeting and bracing and the proper performance of the work. The bottom of the trench shall be rounded so that the bottom quadrant of the pipe will rest firmly on undisturbed soil for as nearly the full length of the barrel as proper jointing operations will permit. This part of the excavation shall be done manually only a few feet in advance of the pipe laying by men skilled in this type of work. Unauthorized overdepths shall be backfilled with loose, granular, moist earth, thoroughly tamped. Whenever the presence of incipient slides is noted during excavation, the trench walls shall be restrained with adequate sheeting, shoring and bracing. The CONTRACTOR shall be responsible for the safety of his men working in the trench. The CONTRACTOR is cautioned to take adequate safety measures and give appropriate personnel training with respect to trench side wall stability.

D. Removal of Unstable Material: It is the intent of this specification that all pipe and other structures shall be provided with a stable foundation and that any material which by reason of kind or condition is not or cannot be made stable by drainage or compaction shall be removed and replaced. Therefore, any material encountered at the elevation shown on the drawings or specified for pipe, that will not or cannot be improved to provide a stable foundation for the pipe shall be removed and replaced. All unstable material below the grade line of the pipe shall be removed for the full width of the trench and replaced with suitable

selected material and compacted. For the purpose of this specification, muck, peat and other highly organic soils shall be considered to be unstable materials. Also, any fine-grained soil which is or might become wet to such a degree that its moisture content is equal to or greater than 90 percent of its liquid limit will have to be specifically approved by the ENGINEER with regard to stability or shall be considered to be an unstable material requiring removal and replacement.

E. Bedding: The bedding surface for the pipe shall provide a firm foundation of uniform density throughout the entire length of the pipe. The pipe shall be carefully bedded in a soil foundation that has been accurately shaped and rounded to conform to the lowest 1/4 of the outside circular portion of the pipe for its entire length, and when necessary, shall be tamped to secure uniform, firm support.

F. Backfilling: Refer to Section 02200.

3.03 CLEANING

A. The interior of the pipes shall be thoroughly cleaned of all foreign matter before being gently lowered in the trench and shall be kept clean during laying operations by means of plugs or other approved methods. During suspension of work for any reason at any time, a suitable stopper shall be placed in the end of the pipe last laid to prevent mud or other foreign material from entering the pipe.

PART 4 - QUALITY ASSURANCE TESTING

4.01 PRESSURE TESTING TRENCH DRAIN OUTFALL

A. After the trench drain outfall has been laid, it shall be filled with water, taking care to bleed off any trapped air. It shall then be subjected to a hydrostatic pressure test, with a test pressure at the lowest elevation to the system, that is a maximum of 1½ times the system design pressure. When, in the opinion of the ENGINEER, local conditions require that the trenches be backfilled immediately after the pipe has been laid, the pressure test may be made after backfilling has been completed but not sooner than that time which will allow sufficient curing of any concrete that may have been used (typical minimum concrete cure times are 36 hours for early strengths and 7 days for normal-strength materials).

B. Testing for leakage can be done by maintaining the test pressure over a period of 4 hours, and then dropping the pressure by 10 psi. If the pressure remains steady (within 5% of the target value) for an hour, no leakage in the system is indicated.

4.03 REPAIRS

A. If any section of the outfall fails to pass the test, the CONTRACTOR shall perform an inspection of the faulty section and replace or repair it at no cost the OWNER. He shall make repairs to the various systems with new materials. Repeat tests after disclosed defects have been corrected, until piping system passes test to the satisfaction of the ENGINEER.

SECTION 03300

CONCRETE

PART 1 - GENERAL

1.01 SCOPE

A. This Section includes: furnishing all labor, materials, equipment and incidentals required for complete installation of cast-in-place concrete for the paving and retaining walls, as shown in the Drawings and as specified in these specifications.

1.02 TESTS

A. Testing and analysis of concrete will be performed by a testing laboratory retained by the OWNER.

B. One random cylinder test set will be taken per day for each type of concrete placed. The set shall consist of three cylinders and one shall be broken at seven days, one at 28 and one held in reserve. The ENGINEER shall be furnished a copy of the test results.

1.03 SUBMITTALS

A. At least 14 days prior to the start of any concrete placement submit the following:

B. Manufacturer's certification that concrete and reinforcing materials meet specification requirements.

C. Submit one copy of delivery tickets for each load of concrete delivered to site to the ENGINEER.

PART 2 - PRODUCTS

2.01 STRUCTURES

Conform to Section 400-27 DOT Standard Specifications for Road and Bridge Construction.

2.02 PAVING

Conform to Section 345-2 of FDOT Standard Specifications for Road and Bridge Construction.

Strengths:

1. Minimum Compressive Strength at 7 days: 1,500 psi.

2. Minimum Compressive Strength at 28 days: 3,000 psi.

3. Slump: 1 - 3 inches.

2.03 SURFACE HARDENER

Use Surface Hardener: "MASTER PLATE F, manufactured by MASTER BUILDERS in the areas designated on Drawing 2.

2.04 PAVING WITH AREAS TO RECEIVE SURFACE HARDENING TREATMENT

A. Maximum slump of 5" (12.7 cm) for a slab on grade and 3.5" (8.9 cm) for a suspended slab.

B. Maximum total air content of 3% per ASTM C231-89.

C. Do not use calcium chloride of set-accelerating admixtures containing calcium chloride.

D. Do not use admixtures that increase bleeding.

E. Consult the dry shake material supplier for approved mix designs and additives.

PART 3 - EXECUTION

3.01 FORMWORK

A. Structures - Conform to FDOT Sections 400-5 and 400-14 Standard Specifications for Road and Bridge Construction.

B. Paving - Conform to FDOT Section 350-5 Standard Specifications for Road and Bridge Construction.

3.02 PLACING CONCRETE

A. Notify ENGINEER minimum 24 hours prior to commencement of concreting operations.

B. Structures - Conform to FDOT Section 400.7 Standard Specifications for Road and Bridge Construction.

C. Pavement - Conform to FDOT Section 350-6 Standard Specifications for Road and Bridge Construction.

3.03 REINFORCING STEEL

A. Structure - Conform to FDOT Sections 415-4, 415-5, and 415-6 Standard Specifications for Road and Bridge Construction.

B. Paving - Conform to FDOT Section 350-7 Standard Specifications for Road and Bridge Construction.

3.04 SCHEDULE FINISHES

A. Structure - Conform to FDOT Section 400-15 Standard Specifications for Road and Bridge Construction.

B. Paving - Conform to FDOT Sections 350-8 and 350-11 Standard Specifications for Road and Bridge Construction.

C. Surface Hardener - Refer to manufacturer's recommendations.

3.05 CURING

A. Structure - Conform to FDOT Section 400-16 Standard Specifications for Road and Bridge Construction.

B. Paving - Conform to FDOT Section 350-13 Standard Specifications for Road and Bridge Construction.

SECTION 05520

HANDRAILS

PART 1 - GENERAL

1.01 SCOPE

A. This section refers to the rails installed along the top of the wall separating the rolloff/compaction and citizen unloading area. The CONTRACTOR shall furnish all labor, materials, equipment required for complete installation of pipe fillways and appurtenances as shown on the drawings and as specified herein.

B. Submittals - Submit information on paint to be used for rails.

PART 2 - PRODUCTS

A. The rails and posts shall be made of steel pipe, meeting the requirements of FDOT Standard Specifications for Road and Bridge Construction, Section 962-9.1.

B. Paint - Use zinc-chromate paint and aluminum paint.

PART 3 - EXECUTION

A. Erection - Comply with Section 515-2.2 FDOT Standard Specifications for Road and Bridge Construction.

B. Painting - Comply with Section 515-2.3 FDOT Standard Specifications for Road and Bridge Construction.

SECTION 05530

GRATES

PART 1 - GENERAL

1.01 SCOPE

This section includes installation of trench drains completed as shown in the Drawings.

PART 2 - PRODUCTS

2.01 GENERAL

Ferrous castings shall be as manufactured by Neenah Foundry Company or prior approved equal. They shall be of uniform quality, free from blowholes, shrinkage, distortion or other defects. They shall be smooth and well cleaned by shotblasting.

2.02 QUALITY

Metal used in the manufacture of castings shall conform to ASTM A48-83 Class 35 Gray Iron for heavy duty use.

2.03 FINISH

All castings shall be manufactured true to pattern; component parts shall fit together in a satisfactory manner. Round frames and covers shall have continuously machined bearing surfaces to prevent rocking and rattling.

2.04 TOLERANCES

As cast dimensions may vary one-half the maximum shrinkage possessed by the metal or +/- 1/16 inch per foot.

2.05 SUBMITTALS

Manufacturer's shop drawings shall be submitted to the ENGINEER for approval prior to manufacture or shipping of castings to job site. The ENGINEER shall retain the right to reject castings not conforming to this specification and/or approved submittal drawings.

PART 3 - EXECUTION

Follow Manufacturer Instructions.

D.E.P.
SEP 29 1997
SOUTHWEST DISTRICT
TAMPA

LAW
ENGINEERING AND ENVIRONMENTAL SERVICES, INC.

PROJECT MANUAL
FOR
EXPANSION OF CITIZENS DROP OFF AREA
AT
RESOURCE RECOVERY FACILITY

BID NO 97-168

Prepared For:

PASCO COUNTY
BOARD OF COUNTY COMMISSIONERS
UTILITY SERVICES
NEW PORT RICHEY, FLORIDA 34654

Prepared By:

LAW ENGINEERING AND ENVIRONMENTAL SERVICES, INC.
4919 WEST LAUREL STREET
TAMPA, FLORIDA 33607

SEPTEMBER 1997

H:\USERS\40140\REPORT\SPECS\T4170255.V1

LAW PROJECT 40141-7-0255 COPY NO. 3 VOLUME 1 OF 2

RECEIVED
SEP 29 1997
D E P

TABLE OF CONTENTS

VOLUME 1

DIVISION 0 - BIDDING AND CONTRACT REQUIREMENTS

		PAGE
Section 00020	Invitation To Bid	00020
Section 00100	Instructions to Bidders	00100
Section 00300	Bid Form	00300
Section 00402	List of Similar Projects and References	00402
Section 00405	Schedule of Bid Items	00405
Section 00406	List of Proposed Subcontractors	00406
Section 00407	Certificate of Compliance with Florida Trench Safety Act	00407
Section 00409	Non-Collusion Affidavit	00409
Section 00500	EJCDC Standard Form Of Agreement	00500
Section 00510	Exhibit "A"	00510
Section 00607	Notice of Award	00607
Section 00609	Notice to Proceed	00609
Section 00610	Construction Performance Bond	00610
Section 00620	Construction Payment Bond	00620
Section 00700	General Conditions	00700
Section 00800	Supplementary Conditions to the General Conditions	00800

SECTION 00020

INVITATION TO BID

PASCO COUNTY

BID NO. 97-168

D.E.P.
SEP 29 1997
SOUTHWEST DISTRICT
TAMPA

EXPANSION OF CITIZENS DROP OFF AREA
AT
RESOURCE RECOVERY FACILITY

FOR

PASCO COUNTY
BOARD OF COUNTY COMMISSIONERS
NEW PORT RICHEY, FLORIDA 34654

BIDS: Sealed bids in triplicate, will be received by the Board of County Commissioners of Pasco County, Florida, Attention: Purchasing Department, 8919 Government Drive, New Port Richey, until October 16, 1997, at 2:00 PM for the Expansion of Citizens Drop Off Area at the Resource Recovery Facility, as described below, at which time the said bids will be opened and read publicly. Any bids received after the date and time specified will not be considered.

Pre-Bid Conference: A pre-bid conference will be held September 25, 1997, at 10:00 AM, at the Public Works/Utilities Building, Utilities Conference.

Background: The project described in these Contract Documents include furnishing all labor equipment and materials necessary to construct the expansion of the Citizens Drop Off Area, the installation of trench drains, and other work as shown in the drawings.

Contract Documents: The Contract Documents are dated and are bound as follows:

- Volume 1 of 2 - "PROJECT MANUAL"
- Volume 2 of 2 - "PROJECT MANUAL (TECHNICAL SPECIFICATIONS)"
- Contract Drawings

All work performed shall be in accordance with the Contract Documents pertaining thereto, which may be examined at:

Pasco County Purchasing Department
Pasco County Government Complex
8919 Government Drive
New Port Richey, Florida 34654
(813)847-2411

or

Pasco County Resource Recovery
Facility (Second Floor, Pasco County Office)
14230 Hays Road
Spring Hill, Florida 34610
(813)856-0119 fax (813)856-0007

or

Law Engineering and Environmental Services, Inc.
4119 W. Laurel Street
Tampa, Florida 33607
(813)289-0750 fax (813)289-5474

One copy of the Contract Documents, including blank bid forms, may be obtained upon payment of $50.00 in cash or check payable to Law Engineering and Environmental Services, Inc. (ENGINEER), which will not be refundable.

Bid Security: A certified or cashier's check on a national or state bank or a bid bond in a sum of not less than five percent (5%) of the amount of the bid, made payable to the OWNER, shall accompany each bid as a guarantee that the Bidder will not withdraw from the competition after the opening of bids. In the event that the Contract is awarded to the Bidder, he will enter into the Contract and furnish and pay for the required performance and payment bonds, failing to do so may result in the OWNER retaining the bid deposit for liquidated damages. Bids shall be prepared, addressed and submitted in compliance with detailed instructions as set forth in the Instructions to Bidders.

Performance and payment Bonds: The performance and payment bonds in the full amount of the contract price shall be written by a surety company, acceptable to the OWNER, licensed to do business in the State of Florida, and in accordance with Articles 5.1 and 5.2 of the General Conditions, and as amended in the Special Conditions.

Rejection of Bids: The OWNER reserves the right to reject any and all bids with or without cause, to waive technical errors and informalities, or to accept the bid which in his judgment best serves the OWNER.

Conflict of Interest: The award hereunder is subject to provisions of Chapter 112, F.S. All Bidders must disclose - with their bid - the name of any officer, director, or agent who is also an employee of Pasco County, Florida. Further, all Bidders must disclose the name of any Pasco County employee who owns, directly or indirectly, an interest of five percent (5%) or more in the bidder's firm or any of its branches.

Insurance Required: It shall be the responsibility of the successful Bidder to maintain Workmen's Compensation Insurance, Public Liability Insurance, Property Damage Insurance, and Vehicle Liability Insurance during the time any of his personnel are working on Pasco County property (refer to Sections 00700 and 00800).

Local, State and Federal Compliance Requirements: Bidders shall comply with all local, state and federal directions, orders and laws as applicable to this bid and subsequent awards, including but not limited to:

A. Equal Employment Opportunity (EEO) - in compliance with Executive Order 11246, as applicable to the ward.

B. Minority Business Enterprise (MBE) - as applicable to this award.

C. Occupational Safety and Health Act (OSHA) - as applicable to this award.

OWNER: PASCO COUNTY BOARD OF COUNTY COMMISSIONERS

By: Frank Fortino
Purchasing Director

Date: _____

Bid No._____

Date: _____

Published on: _____

SECTION 00100

INSTRUCTIONS TO BIDDERS

PROJECT: Expansion of Citizens Drop Off Area at Resource Recovery Facility, BID NO. 97-168.

BID MUST BE RECEIVED AND OPENED BY: OCT 16, 1997 at 2:00 PM.

PLACE OF BID OPENING AND DELIVER TO: Purchasing Department, 8919 Government Drive, New Port Richey, Florida 34654.

GENERAL TERMS AND CONDITIONS

1. **Bids:** The responsibility for delivering the bid to the Purchasing Department on or before the stated time and date will be solely and strictly the responsibility of the bidder. The Purchasing Department will be in no way responsible for delays caused by the mail service or any other occurrence.

   The lower left corner of the envelope in which you mail your bid must be a notated SEALED BID 97-_____. The bidder shall be responsible for reading, very carefully, and understanding completely, the requirements and the specifications of the items bid upon. Bid time will be and must be scrupulously observed. Under no circumstances will bids delivered after the time specified be considered. Such bids will be returned to the vendor unopened. Do not include more than one (1) bid per envelope.

   Bidders will not be allowed to modify their bids after the opening time and date. Offers by telephone or telegram will not be accepted. Bid files may be examined during normal working hours by appointment.

2. **Prices:** Firm prices shall be quoted, typed or printed in ink, and include all packing, handling, shipping charges, and delivery to the destination when specified. If the quoted prices is subject to time limitation as to acceptance, the expiration of such time limitation shall be clearly stated.

3. **Conditions of Materials and Packing:** Unless otherwise indicated, it is understood and agreed that any item offered or shipped on this bid shall be New and in First Class Condition. It is further understood that all containers shall be new and suitable for storage or shipment and that prices include standard commercial packaging.

4. **Claims:** The successful bidder(s) will be responsible for making any and all claims against carriers for missing or damaged items.

5. **Manufacturer's Name:** Any manufacturer's names, trade names, information, and/or catalog numbers used herein are for the purpose of description and establishing general quality levels. Such references are not intended to be restrictive; products or any manufacturer may be offered, if they are approved as equals. The determination as to whether any alternate product or service is or is not equal shall be made by the OWNER and Law Engineering and Environmental Services, Inc. (ENGINEER) and such determination shall be final and binding upon all bidders.

6. **Specifications:** Any deviation from specifications listed herein must be clearly indicated; otherwise, it will be considered that items offered are in strict compliance with these specifications and the successful bidder will be held responsible therefore. Deviations must be explained in detail on an attached sheet(s) and itemized by number. Any item or items that do not meet OWNER specifications in a reasonable time, the bidder will be required to compensate the OWNER for the difference in price entailed in going to the next low bidder.

7. **No Bid:** Where more than one item is listed, any items not bid, the "STATEMENT OF NO BID" should be returned. Failure to do so could be an indication that the bidder does not wish to be considered for future bids.

8. **Acceptance and Rejections:** The OWNER reserves the right to reject any and all bids in whole or in part; to award any item, group of items, or total bid, unless otherwise specified by the bidder, to waive any informality or technical defects in bids, to accept the lowest bid meeting specifications or accept the bid which is most advantageous and in the best interest of Pasco County. Delivery time, as well as price, can be a strong factor in determining which bid will be the most advantageous to Pasco County.

9. **Taxes:** Pasco County does not pay Federal Excise and Sales Taxes on direct purchases of tangible personal property. See Exemption Number on face of Purchase Order. This exemption does not apply to purchases of tangible personal property made by contractors who use the tangible personal property in the performance of contracts for improvement of OWNER-owned real property (see State of Florida, Chapter 192, Florida Statutes (F.S.)).

10. **Interpretations:** Any questions concerning conditions, specifications, or requests for additional information pertaining to this bid must be in writing addressed to Pasco County Board of County Commissioners, Utility Services, Attention: Vincent Mannella, P.E., for receipt no later than ten (10) days prior to bid opening. Inquiries must reference the bid number. Failure to comply with this condition will result in bidder waiving her/his right to dispute the bid specifications. Answers to questions and/or supplemental instructions will be in the form of written addendum to the bidding documents prior to the bid opening.

11. **Conflict of Interest:** The award hereunder is subject to provisions of Chapter 112, F.S. All bidders must disclose with their bid the name of any officer, director, or agent who is also an employee of Pasco County, Florida. Further, all bidders must disclose the name of any Pasco County employee who owns, directly or indirectly, an interest of five percent (5%) or more in the bidder's firm or any of its branches.

12. **Legal Requirements:** Federal, State, County, and local laws, ordinances, rules, and regulations that in any manner affect the items covered herein apply. Lack of knowledge by the bidder will in no way be a cause for relief from responsibility.

13. **Bid Tabulations:** Bidders desiring a copy of the Bid Tabulation of this Invitation to Bid may request same by enclosing a self-addressed, stamped envelope with their bid.

14. **Pasco County Bid Form:** All bid proposals must be submitted on our standard Bid Form. Bid proposals on vendor quotation forms will not be accepted.

15. **Non-Appropriation of Funds:** In the case of non-appropriation of funds to continue the function performed or obtained by this award, the award shall be terminated when appropriated funds are expired and the bidder shall have only the right and remedy to take possession of equipment pertaining to the award.

16. **Public Entity Crime Information Statement:** A person or affiliate who has been placed on the convicted vendor list following a conviction for a public entity crime may not submit a bid on a contract to provide any goods or services to a public entity, may not submit a bid on a contract with a public entity for the construction or repair of a public building or public work, may not submit bids on leases of real property to a public entity, may not be awarded or perform work as a contractor, supplier, subcontractor, or consultant under a contract with any public entity, and may not transact business with any public entity in excess of the threshold amount provided in Section 287.017, for CATEGORY TWO for a period of 36 months from the date of being placed on the convicted vendor list.

17. **Trench Safety Act Form:** Bidders submitting proposals are advised that they must complete a Trench Safety Act Compliance Form, as required by Florida Statute, Sections 553.60 and 553.64. Failure to submit this compliance form may result in your bid being declared non-responsive. A copy of the form is included in the bid contract documents.

18. **Bid Identification:** Bids received without being identified in the lower left hand corner of the envelope may be rejected and returned to the sender. If bids are sent via Express Mail, bid proposal pages MUST be placed in a sealed envelope, properly identified, within the Express Mail envelope. No responsibility will attach to Pasco County or any official or employee thereof, for the pre-opening of, post-opening of, or the failure to open, a proposal not properly addressed and identified.

19. **Subsurface Conditions:** Soil borings, reports or other subsurface information, if available, are obtained and intended for design and estimate purposes only. They are made available to Bidders in good faith, so that said Bidders may have access to identical subsurface information which is available to the OWNER and are not intended as a substitute for personal investigation, interpretation and judgment of the Bidders.

20. **Subcontractor List:**

    A. In conjunction with the Bid Form, Bidder shall submit a list of names of the subcontractors and major material suppliers proposed for the principal portions of the work. Submit a list on form provided by the ENGINEER.

    B. Prior to award of contract, ENGINEER will notify the Bidder in writing if either the OWNER or the ENGINEER has an objection to any person or entity listed. Upon such reasonable objection, the Bidder shall propose an acceptable substitute person or entity in accordance with Article 6.8.1 and 6.8.2 of the General Conditions.

SECTION 00300

BID FORM

EXPANSION OF CITIZENS DROP OFF AREA,
AT
RESOURCE RECOVERY FACILITY

FOR

PASCO COUNTY
BOARD OF COUNTY COMMISSIONERS
NEW PORT RICHEY, FLORIDA 34654

PASCO COUNTY BID NO. 97-168

(Note: Use black ink for completing this form)

Bid of _____
(Name)

_____
(Address)

to furnish all materials, equipment and labor and to perform all work in accordance with the Contract Documents for: constructing the expansion to the Citizens Drop Off, installation of Trench Drains, and other work, as shown in the drawings for Pasco County Board of County Commissioners located in New Port Richey, Florida.

Submitted to: Pasco County Board of County Commissioners
Pasco County, Florida (OWNER)

Frank Fortino, Purchasing Director
Pasco County Purchasing Division
8919 Government Drive
New Port Richey, Florida 34654

1.1 BIDDER'S DECLARATION AND UNDERSTANDING

The undersigned Bidder has carefully examined the Contract Documents and the site of the proposed work and is familiar with the nature and extent of the work and any local conditions that may in any manner affect the work to be done.

The undersigned agrees to do all the work and furnish all materials called for by the Contract Documents, in the manner prescribed therein and to the standards of quality and performance established by the ENGINEER for the lump sum price or the unit prices stated in the spaces herein provided, for each of the items or combination of items stipulated.

Base Bid (which is the basis for award): Contingency plus lump sum cost to furnish all labor, materials, equipment and incidentals required to construct the expansion to the Citizens Drop Off, installation of Trench Drains, and other work, as shown in the drawings.

Contingency	$25,000
Lump Sum	$_____00/100/Dollars
Base Bid: (Lump Sum of)	$_____00/100/Dollars

The undersigned understands that this contract is being bid on a lump sum basis and the basis for award of contract is the lump sum cost as bid by the Bidder. The SCHEDULE OF BID ITEMS that follows, Section 00405 is intended to be a guide and to aid the OWNER in evaluation of bids. At the present time, the OWNER does not intend to increase or decrease the work as required in the contract documents. However, if required, the unit prices provided by the Bidder shall be binding on the successful Bidder and OWNER for all change orders used for these deviations. Any under estimating or over estimating (of quantities in the SCHEDULE OF BID ITEMS) by the Bidder will not entitle an adjustment to this lump sum contract. It is the Bidders responsibility to accurately estimate the quantities and work effort necessary to complete this lump sum project.

All quantities can be taken from the Contract Drawings.

The undersigned understands unit prices provided shall cover all costs including, but not limited to: labor, materials, tools, equipment, shoring, removal, overhead, profit, bonds, insurance, etc., to cover the finished work of the several kinds called for. No allowance will be made for such additional work performed without either a work directive change, and/or a change order, or prior to making any measurements necessary to determine the quantities. Changes shall be processed in accordance with the applicable Paragraph(s) of the General Conditions and Supplemental General Conditions.

1.2 SURETY

Accompanying this proposal is a certified or cashier's check or a bid bond in the amount of $_____ (not less than 5% of the bid) made payable to: Pasco County Board of County Commissioners which is to be forfeited as liquidated damages, if, in the event this proposal is accepted, the undersigned fails to execute the agreement and furnish and pay for satisfactory performance and payment bonds under the conditions and within the time specified in the proposal, otherwise said certified or cashier's check or bid bond is to be returned to the undersigned.

1.3 CONTRACT EXECUTION TIME

The undersigned agrees that within ten days, not including Sundays and legal holidays, from the date of acceptance of this proposal, to execute the agreement (Section 0500) and furnish and pay for satisfactory performance and payment bonds (Sections 00610 and 00620), in the full amount of the Contract price, guaranteeing the faithful performance of the work and payment of bills.

1.4 CONTRACT COMPLETION TIME

The undersigned also agrees to substantially complete the work within the time specified in the Agreement (Section 00500) after the date when the Contract Time commences to run and to be completed and ready for final payment within the time specified in the Agreement (Article 3) after the Contract Time commences to run.

The undersigned further agrees to reimburse the OWNER, as liquidated damages for each calendar day elapsing between the date herein specified as the date of substantial completion and final completion and the actual dates of such substantial completion of the contract work the amount specified in the Agreement. Refer to Article 3 of the Agreement.

1.5 CERTIFICATES AND LICENSE

The successful Bidder further agrees to furnish the OWNER, before commencing the work under this contract, the Certificates of Insurance, as specified in these documents, and a copy of their Contractor License.

1.6 ADDENDA

The Bidder hereby acknowledges that he has received Addenda ___, ___, ___, ___, ___, and ___ (Bidder shall insert number of each addendum received) and agrees that all addenda issued are hereby made part of the Contract Documents, and the Bidder further agrees that his Proposal(s) includes all impacts resulting from said addenda.

1.7 SALES AND USE TAXES

The Bidder agrees that all Federal, State, and local sales use taxes are included in the stated bid prices for the work.

The following documents are attached to and made a condition of this Bid:

- List of Similar Projects and References (Section 00402)
- Bid Security (Bid Bond, Cashiers Check or Certified Check)
- List of Proposed Subcontractors (Section 00406)
- Power of Attorney (for Bid Bond only)
- Certificate of Compliance with Florida Trench Safety Act (Section 00407)
- Required Disclosure on Public Entity Crimes (Section 00408)
- Noncollusive Affidavit (Section 00409)

SECTION 00402

LIST OF SIMILAR PROJECTS AND REFERENCES

PROJECT: _____

COMPLETION DATE: _____

CONTACT: _____

_____

_____

PROJECT: _____

COMPLETION DATE: _____

CONTACT: _____

_____

_____

PROJECT: _____

COMPLETION DATE: _____

CONTACT: _____

_____

_____

Bidder's Name: _____ Signature: _____

SECTION 00405

SCHEDULE OF BID ITEMS

ITEM	DESCRIPTION	ESTIMATED QUANTITY	UNITS	UNIT PRICE	ESTIMATED AMOUNT
1	Clear and Grubbing	.94	Ac.		
2	Cut	495	CY		
3	Fill	3,790	CY		
4	Pavement Base	20,341	SF		
5	Concrete Pavement	20,341	SF		
6	Concrete Walls	190	CY		
7	Rails	390	LF		
8	Gazebo	1	LS		
9	8" Culvert	85	LF		
10	Inlet/Outlet Protection	4	CY		
11	18" Culvert	96	LF		
12	Inlet/Outlet Protection	4	SF		
13	Curbs	50	LF		
14	Trench Drain	330	LF		
15	Junction Boxes	2	EA		
16	6" PVC Pipe	277	LF		
17	PVC Guard Rail	114	LF		
18	Electrical				
	a.) 250 Amp Main	1	EA		
	b.) 3-30 Amp Fuses	3	EA		
	c.) Wire		LF	P	
	d.) Buried Conduit	264	LF		
	e.) Wall Mounted Conduit	140	LF		
	f.) Disconnects	3	EA		
19	Sod	13,500	SF		
20	Seeding	9,730	SF		
21	Relocate Guard Rail	500	LS		

SECTION 00406

LIST OF PROPOSED SUBCONTRACTORS

The following is a complete list of all of the subcontractors to be used if the undersigned is awarded the Contract for this project:

Type of Work	Name and Address of Subcontractor

Bidder's Name: _____ Signature: _____

SECTION 00407

CERTIFICATE OF COMPLIANCE WITH FLORIDA TRENCH SAFETY ACT

Bidder acknowledges that he is solely responsible for complying with the Florida Trench Safety Act (Act) and Occupational Safety and Health Administrations excavation safety standard 29 CFR 1926.650 (Subpart P as amended). Bidder further acknowledges that included in the various items of the proposal and in the Total Bid Price are costs for complying with the Florida Trench Safety Act (90-96, Laws of Florida) effective October 1, 1990. The Bidder further identifies the costs to be summarized below:

	TRENCH SAFETY MEASURE (DESCRIPTION)	UNITS (LF, SY)	UNIT COST	UNIT (QNTY)	EXTENDED COST
1.			$		$
2.			$		$
3.			$		$
4.			$		$
5.			$		$

TOTAL $_____

Failure to complete the above may result in the bid being declared non-responsive. The costs indicated above are provided to comply with the Act and shall not constitute grounds for any additional compensation to that listed for the separate line items of the Bid Form.

By: _____ _____

Bidder Date

_____

Authorized Signature

_____

Title

SECTION 00409

NON-COLLUSION AFFIDAVIT

State of _____)
ss.
County of _____)

_____ being first duly sworn, deposes and says that:

(1) He is the _____,
(Owner, Partner, Officer, Representative or Agent)

of _____ the Bidder that has submitted the attached Bid;

(2) He is fully informed respecting the preparation and contents of the attached Bid and of all pertinent circumstances respecting such Bid;

(3) Such Bid is genuine and is not a collusive or sham Bid;

(4) Neither the said Bidder nor any of its officers, partners, owners, agents, representatives, employees or parties in interest, including this affiant, have in any way colluded, conspired, connived or agreed, directly or indirectly, with any other Bidder, firm, or person to submit a collusive or sham Bid in connection with the work for which the attached Bid has been submitted; or to refrain from bidding in connection with such work; or have in any manner, directly or indirectly, sought by agreement or collusion, or communication, or conference with any Bidder, firm, or person to fix the price or prices in the attached Bid or of any other Bidder, or to fix any overhead, profit, or cost elements of the Bid price or the Bid price of any other Bidder, or to secure through any collusion, conspiracy, connivance, or unlawful agreement any advantage against (Recipient), or any person interested in the proposed work;

(5) The price or prices quoted in the attached Bid are fair and proper and are not tainted by any collusion, conspiracy, connivance, or unlawful agreement on the part of the Bidder or any other if its agents, representatives, owners, employees or parties in interest, including this affidavit.

By: _____

Its: _____
(Title)

SECTION 00500

EJCDC
STANDARD FORM OF AGREEMENT
BETWEEN OWNER AND CONTRACTOR
ON THE BASIS OF A STIPULATED PRICE

THIS AGREEMENT is dated as of the _____ day of _____ in the year 1997 by and between BOARD OF COUNTY COMMISSIONERS OF PASCO COUNTY, FLORIDA (hereinafter called OWNER) and _____ hereinafter called CONTRACTOR).

OWNER and CONTRACTOR, in consideration of the mutual covenants hereinafter set forth, agree as follows:

Article 1. WORK.

CONTRACTOR shall complete all work as specified or indicated in the Contract Documents. The work is generally described as follows: Construct the expansion of the Citizens Drop Off, Installation of Trench Drains, and other work, as shown in the drawings.

Article 2. ENGINEER.

The Project has been designed by:

Law Engineering and Environmental Services, Inc.
4919 West Laurel Street
Tampa, Florida 33607

The construction project will be administered by:

Pasco County Board of County Commissioners
Utility Services
14230 Hays Road
Spring Hill, Florida 34610

Law Engineering and Environmental Services, Inc., who is hereinafter called ENGINEER and who is to act as OWNER's representative, assume all duties and responsibilities and have the rights and authority assigned to ENGINEER in the Contract Documents in connection with completion of the work in accordance with the Contract Documents.

Article 3. CONTRACT TIME.

3.1 The work will be substantially completed within 90 days from the date when the Contract Time commences to run as provided in Paragraph 2.3 of the General Conditions, and completed and ready for final payment in accordance with Paragraph 14.13 of the General Conditions within 100 days from the date when the Contract Time commences to run.

3.2 Liquidated Damages. OWNER and CONTRACTOR recognize that time is of the essence of this Agreement and that OWNER will suffer financial loss if the work is not completed within the times specified in Paragraph 3.1 above, plus any extensions thereof allowed in accordance with Article 12 of the General Conditions. They also

recognize the delays, expense and difficulties involved in proving in a legal proceeding the actual loss suffered by OWNER if the work is not completed on time. Accordingly, instead of requiring any such proof, OWNER and CONTRACTOR agree that as liquidated damages for delay (but not as a penalty) CONTRACTOR shall pay OWNER Two hundred Dollars ($200.00) for each calendar day that expires after the time specified in Paragraph 3.1 for Substantial Completion until the work is substantially complete. After Substantial completion if CONTRACTOR shall neglect, refuse or fail to complete the remaining work within the Contract Time or any proper extension thereof granted by OWNER, CONTRACTOR shall pay OWNER Fifty Dollars ($50.00) for each calendar day that expires after the time specified in Paragraph 3.1 for completion and readiness for final payment.

Liquidated damages will not be limited to the amount of the contract price, but the OWNER may deduct and withhold from payments remaining due or sums remaining unpaid under the contract as partial or total payments remaining due or sums remaining unpaid under the contract as partial or total payments of liquidated damages. The OWNER shall have the right to apply as payment on such liquidated damages any money which is due to the CONTRACTOR by the OWNER, permitting the contract to continue and to finish the work, or any part of it, after the expiration of the contract time allowed, including extensions of time granted to the CONTRACTOR, shall in no way act as a waiver on the part of the OWNER of the liquidated damages due under the contract. In case of default of the contract and the completion of the work by the OWNER, the CONTRACTOR shall be liable for liquidated damages under the contract, but no liquidated damages shall be chargeable for any delay in the final completion of the work by the OWNER due to any unreasonable action or delay on the party of the OWNER. The contract will be considered complete when all work has been completed and has been accepted by the OWNER. In addition to the damages provided for in this contract, when the CONTRACTOR fails to complete the work within the contract time or within such additional time as may be granted by the OWNER, the OWNER may recover from the CONTRACTOR amounts paid by the OWNER for damages suffered by third parties unless the failure to timely complete the work was caused by the OWNER's act or omission.

Article 4. CONTRACT PRICE.

4.1 OWNER shall pay CONTRACTOR for completion of the work in accordance with the Contract Documents in current funds at the lump sum or unit prices presented in the Bid form, attached to this agreement.

4.2 The parties expressly agree that the Contract Price is a stipulated sum, except with regards to the items in the Bid which are subject to unit prices.

Article 5. PAYMENT PROCEDURES.

CONTRACTOR shall submit the Application for Payment in accordance with Article 14 of the General Conditions. The Application for Payment will be processed by ENGINEER as provided in the General Conditions.

5.1 Progress Payments. OWNER shall make progress payments on account of the Contract Price on the basis of CONTRACTOR's Applications for Payment as recommended by ENGINEER, on or about the 1st day of each month during construction, as provided below. All progress payments will be on the basis of the progress of the work measured by the schedule of values established in paragraph 2.9 of the General Conditions (and in the case of Unit Price Work based on the number of units completed) or, in the event there is no schedule of values, as provided in the General Requirements.

5.1.1 Prior to Substantial Completion, progress payments will be made in an amount equal to the percentage indicated below, but, in each case, less the aggregate of payments previously made and less such amounts as ENGINEER shall determine, or OWNER may withhold, in accordance with paragraph 14.7 of the General Conditions.

90% of work completed.

5.1.2 Upon substantial completion, in an amount sufficient to increase total payments to CONTRACTOR to 95% of the Contract Price, less such amounts as ENGINEER shall determine, or OWNER may withhold, in accordance with paragraph 14.7 of the General Conditions.

5.2 Final Payment. OWNER shall make a single payment on account of the Contract price on the basis of CONTRACTOR's Application for Payment as recommended by ENGINEER. Upon final completion and acceptance of the work in accordance with Paragraph 14.13 of the General Conditions, OWNER shall pay the Contract Price as recommended by ENGINEER and agreed to by the OWNER as provided in said Paragraph 14.13.

Article 6. INTEREST.

All moneys not paid when due as provided in Article 14 of the General Conditions shall bear interest at the maximum rate allowed by law at the place of the Project.

Article 7. CONTRACTOR's REPRESENTATIONS.

In order to induce OWNER to enter into this Agreement CONTRACTOR makes the following representations:

7.1 CONTRACTOR has familiarized itself with the nature and extent of the Contract Documents, work, site, locality, and all local conditions and Laws and Regulations that in any manner may affect cost, progress, performance or furnishing of the work.

7.2 CONTRACTOR has studied carefully all reports of explorations and tests of subsurface conditions and drawings of physical conditions as provided in Paragraphs 4.2 and 4.3 and their subparts of the General Conditions, and accepts the determination set forth in Paragraphs SC-4.2, 4.2.1, 4.2.2, 4.2.6 and 4.3.2 of the Supplementary conditions of the extent of the technical data contained in such reports and drawings upon which CONTRACTOR is entitled to reply.

7.3 CONTRACTOR has obtained and carefully studied (or assumes responsibility for obtaining and carefully studying) all such examinations, investigations, explorations, tests, reports and studies (in addition to or to supplement those referred to in Paragraph 7.2 above) which pertain to the subsurface or physical conditions at or contiguous to the site or otherwise may affect the cost, progress, performance or furnishing of the work as CONTRACTOR considers necessary for the performance or furnishing of the work at the Contract Price, within the Contract Time and in accordance with the other terms and conditions of the Contract Documents, including specifically the provisions of Paragraph 4.2 and 4.3 and their subparts and SC-4.2.1, 4.2.2, 4.2.6 and 4.3.2 of the General Conditions; and no additional examinations, investigations, explorations, tests, reports, studies or similar information or data are or will be required by CONTRACTOR for such purposes.

7.4 CONTRACTOR has reviewed and checked all information and data shown or indicated on the Contract Documents with respect to existing Underground Facilities at or contiguous to the site and assumes responsibility for the accurate location of said Underground Facilities. No additional examinations, investigations, explorations, tests, reports, studies or similar information or data in respect to said Underground Facilities are or will be required

by CONTRACTOR in order to perform and furnish the work at the Contract Price, within the Contract Time and in accordance with the other terms and conditions of the contract Documents, including specifically the provisions of Paragraph 4.3 of the General Conditions.

7.5 CONTRACTOR has correlated the results of all such observations, examinations, investigations, explorations, tests, reports and studies with the terms and conditions of the Contract Documents.

7.6 CONTRACTOR has given ENGINEER written notice of all conflicts, errors or discrepancies that he has discovered in the Contract Documents and the written resolution thereof by ENGINEER is acceptable to CONTRACTOR.

Article 8. CONTRACT DOCUMENTS.

The Contract Documents which comprise the entire agreement between OWNER and CONTRACTOR concerning the work consist of the following:

8.1 This Agreement (pages 1 to 6, inclusive).

8.2 Exhibits to the Agreement (page 00510-1).

8.3 Notice of Award and Notice to Proceed.

8.4 General Conditions.

8.5 Supplementary Conditions.

8.6 Project Manual produced by Law Engineering and Environmental Services, Inc., Volume 1 of 2, consisting of Division 0 and as listed in table of contents thereof.

8.7 Project Manual - Technical Specifications produced by Law Engineering and Environmental Services, Inc., Volume 2 of 2, consisting of Divisions 1 through 5 as listed in the table of contents thereof.

8.8 Drawings produced by Law Engineering and Environmental Services, Inc., consisting of Sheets numbered 1 through 4.

8.9 Addenda numbers _____ to _____, inclusive.

8.10 CONTRACTOR's Bid with attachments marked exhibit _____.

8.11 Documentation submitted by CONTRACTOR prior to Notice of Award (pages _____ to _____, inclusive).

8.12 The following which may be delivered or issued after the Effective Date of the Agreement and are not attached hereto: All Written Amendments and other documents amending, modifying, or supplementing the Contract Documents pursuant to Paragraphs 3.4 and 3.5 of the General Conditions.

There are no Contract Documents other than those listed above in this Article 8. The Contract Documents may only be amended, modified or supplemented as provided in the General Conditions.

Article 9. MISCELLANEOUS.

9.1 Terms used in this Agreement which are defined in Article 1 of the General Conditions will have the meanings indicated in the General Conditions.

9.2 No assignment by a party hereto of any rights under or interest in the Contract Documents will be binding on another party hereto without the written consent of the party sought to be bound; and specifically but without limitation moneys that may become due and moneys that are due may not be assigned without such consent (except to the extent that the effect of this restriction may be limited by law), and unless specifically stated to the contrary in any written consent to an assignment no assignment will release or discharge the assignor from any duty or responsibility under the Contract Documents.

9.3 OWNER and CONTRACTOR each binds itself, its partners, successors, assigns and legal representatives to the other party hereto, its partners, successors, assigns and legal representatives in respect of all covenants, agreements and obligations contained in the Contract Documents.

Article 10. OTHER PROVISIONS.

IN WITNESS WHEREOF, OWNER and CONTRACTOR have signed this Agreement in triplicate. One counterpart each has been delivered to OWNER, CONTRACTOR and ENGINEER. All portions of the contract Documents have been signed or identified by OWNER and CONTRACTOR or by ENGINEER on their behalf.

This Agreement will be effective on _____, 1996.

OWNER _____

_____

By _____

[CORPORATE SEAL]

CONTRACTOR_____

_____

By _____

[CORPORATE SEAL]

Attest _____

Address for giving notices

_____

_____

(If OWNER is a public body, evidence of authority to sign and resolution or other documents authorizing execution of Agreement).

Attest _____

Address for giving notices

_____

_____

License No. _____

Agent for service of process:

_____

(If CONTRACTOR is a corporation, attach evidence of authority to sign).

SECTION 00510

EXHIBIT "A"

Attach to the Agreement all the pages of the bid as signed by the Bidder and label them Exhibit "A" and include them as pages A-1 through A-16.

SECTION 00607

NOTICE OF AWARD

Dated _____, 19__

TO: _____
(Bidder)

PROJECT: _____

OWNER's CONTRACT NO. _____

CONTRACTOR FOR: Expansion of Citizens Drop Off Area at Resource Recovery Facility.

You are notified that your Bid dated _____, 1997, for the above Contract has been considered. You are the apparent successful Bidder and have been awarded a contract for _____ _____ (indicate total work, alternates or sections of work awarded).

The contract price of your contract is _____ Dollars ($_____).

Enclosed are four originals of the Contract Documents for your execution and subsequent return to this office for further processing.

You must comply with the following conditions precedent within fifteen (15) days of the date of this Notice of Award, that is by _____, 1997:

1. Execute all copies of the Agreement. Each Project Manual and set of contract drawings must bear your signature on the cover sheet. Do not date the Agreements or bonds; this will be accomplished upon execution of the contract by the OWNER. Submit a Power of Attorney authorizing OWNER to date bonds and Agreements.

2. Submit two originals of the Performance and Payment Bonds. Instructions to the Surety and the Principal for execution of the bonds are as follows:

   Where the CONTRACTOR is a Corporation, the Agreement and any bonds must be executed by the president or the Chairman of the Board of the Corporation. The Agreement or Bond is accompanied by a statement certified by a Secretary of the Corporation. The signatures of the persons executing the bond on behalf of the Principal and of the Surety, respectively, shall be dated on the signature line. If the bond is executed by an Attorney-in-Fact for the Surety, the accompanying Power of Attorney must be executed by persons whose authority to do so is plainly identified on the face of the Power of Attorney.

   Neither signatures nor the Corporate Seal may appear by facsimile unless the authority for them to appear in that form is plainly disclosed on the face of the document. The Secretary or other properly authorized Officer must certify and seal a statement declaring that the authority granted by the Power of Attorney remained in force on the date that the bond was executed by the Attorney-in-Fact.

3. Include three (3) copies of the Certificate of Insurance. The Certificate must name the OWNER and ENGINEER as an additional insured and the standard cancellation clause must read as follows:

   "Should any of the above described policies be canceled or changed by restricted amendment before the expiration date thereof, the issuing Company will give thirty (30) days written notice to the below named certificate holder."

Failure to comply with these conditions within the time specified will entitle OWNER to consider your Bid abandoned, to annul this Notice of Award and to declare your Bid Security forfeited.

Within twenty (20) days after you comply with the above conditions, the OWNER will return to you one fully signed counter part of the Contract Documents attached.

If you have any questions, or if we can be of further assistance, please do not hesitate to contact this office.

Sincerely,

_____

Purchasing Director

SECTION 00609

NOTICE TO PROCEED

Dated _____, 1997

OWNER's PROJECT NO. _____

CONTRACTOR FOR: Expansion of Citizens Drop Off Area at Resource Recovery Facility.

CONTRACTOR:

_____

_____

_____

Gentlemen:

You are hereby notified to commence work on the subject contract on or before _____ and are to fully complete the work within 100 calendar days. In accordance with the contract documents, the Substantial Completion date for the project is _____. Extension in time will be written change order only.

Pasco County Board of County Commissioners
(Owner)

By _____
(Assistant County Administrator)

_____
(Printed Name and Title of above signer)

NOTE: Attach this notice to your contract making it a part thereof.

SECTION 00610

CONSTRUCTION PERFORMANCE BOND

BOND NO. _____

AMOUNT: $_____

KNOW ALL MEN BY THESE PRESENTS, that _____ located at _____ _____, as Principal, and _____ _____ as SURETY, located at _____ _____, are held and finally bound unto the Board of County Commissioners, Pasco County, Florida, as Obligee in the sum of _____ and 00/100 Dollars ($_____) for the payment whereof we bind ourselves, our heirs, executors, personal representatives, successors, and assigns, jointly and severally, firmly by these presents.

WHEREAS, Principal has entered into a CONTRACT which also includes the CONTRACT documents, including the Notice to BIDDERS, Instruction to BIDDERS, PROPOSAL, BID BOND, Letter of Intent, General Provisions, SPECIAL PROVISIONS, Technical SPECIFICATIONS, and PLANS and SPECIFICATIONS therein referred to and made a part thereof, and such alterations as may be made in said PLANS and SPECIFICATIONS as therein provided for, NOTICE TO PROCEED, PERFORMANCE BOND, PAYMENT BOND, and any CHANGE ORDER or SUPPLEMENTAL AGREEMENT with Obligee for the construction of Expansion of Citizens Drop Off Area at Resource Recovery Facility in accordance with drawings and SPECIFICATIONS, which CONTRACT is by reference made a part hereof, and is hereinafter referred to as the CONTRACT.

THE CONDITION OF THIS BOND is that if Principal:

1. Performs the CONTRACT within the time restraints and in the manner as set forth in the CONTRACT documents.

2. Pays Obligee any and all losses, damages, including all delay damages, costs, and attorney's fees that Obligee sustains because of any default by Principal under the CONTRACT.

3. Performs the guarantee of all WORK and MATERIALS furnished under the CONTRACT applicable to the WORK and MATERIALS up to and including the one-year warranty period following completion of this CONTRACT, then this BOND is void; otherwise, it remains in full force.

The SURETY, for value received, hereby stipulates and agrees that no changes, extension of time, alterations, or additions to the terms of the CONTRACT, or other WORK to be performed hereunder or the SPECIFICATIONS referred to therein, shall in any way affect its obligation under this BOND, and it does hereby waive notice of any such changes, extensions of time, alterations, or additions to the terms of the CONTRACT or to WORK or to the SPECIFICATIONS.

In no event shall the SURETY be liable in the aggregate to Obligee for more than the penalty of its PERFORMANCE BOND regardless of the number of suits that may be filed by Obligee.

IN WITNESS WHEREOF, the above-bonded parties have executed this instrument under their several seals this ___ day of _____, 19__, the name and corporate seal of each corporate party being hereto affixed and these presents duly signed by its undersigned representative, pursuant to authority of its governing body.

ATTEST:

PRINCIPAL: _____
PRINTED NAME

_____
WITNESS

BY: _____(SEAL)
AUTHORIZED SIGNATURE
(PRINCIPAL)

_____
WITNESS

_____
PRINTED NAME

-OR-

ATTEST:

_____
WITNESS

BY: (SEAL)
AS ATTORNEY IN FACT
(ATTACH POWER)

_____
WITNESS

_____
PRINTED NAME

_____
BUSINESS ADDRESS

_____
BUSINESS TELEPHONE

STATE OF _____)
COUNTY OF _____)

I, the undersigned authority, hereby certify that on this ___day of _____, 19__, before me personally appeared _____and _____ _____, to me known to be the person(s) described in and who executed the foregoing instrument, and acknowledged the execution thereof to be a free act and deed for the uses and purposes therein mentioned.

WITNESS my hand and official seal and the date aforesaid.

_____(SEAL)
NOTARY PUBLIC

My Commission Expires:

ATTEST:

SURETY: _____
PRINTED NAME

_____
BUSINESS ADDRESS

_____

_____
WITNESS

BY: _____(SEAL)
AUTHORIZED SIGNATURE

_____
WITNESS

_____
PRINTED NAME

SECTION 00620

CONSTRUCTION PAYMENT BOND

BY THIS BOND, We, _____, located at _____ (hereinafter called the "Principal") and _____ (hereinafter called the "SURETY"), located at _____, a SURETY insurer chartered and existing under the laws of the State of _____, and authorized to do business in the State of Florida, are held and firmly bound unto the Board of County Commissioners of Pasco County, Florida (hereinafter called the "Owner") in the sum of _____ and 00/100 Dollars ($) for payment of which we bind ourselves, our heirs, our personal representatives, our successors, and our assignees jointly and severally.

WHEREAS, the Principal and Owner have reached a mutual agreement (hereinafter referred to as the "CONTRACT") for the purpose of constructing Expansion of Citizens Drop Off at Resource Recovery Facility said CONTRACT and CONTRACT documents being made a part of this BOND by this reference.

NOW THEREFORE, THE CONDITION OF THIS BOND IS THAT IF THE PRINCIPAL:

1. Shall promptly make payments to all claimants as defined in Section 255.05(1), Florida Statutes, supplying the Principal with labor, MATERIALS, or supplies as used directly or indirectly by the Principal in the prosecution of the WORK provided for in the CONTRACT and CONTRACT documents.

2. Shall pay the Owner for all losses, damages, including any and all delay damages, expenses, costs, and attorney's fees, including those resulting from appellate proceedings that the Owner sustains because of a default by the Principal in contravention to the CONTRACT in regard to payment for such labor, MATERIALS, or supplies furnished to the Principal, then this BOND is void. Otherwise, this BOND remains in full force and effect.

BE IT FURTHER KNOWN:

1. Any changes in or under the CONTRACT and compliance or noncompliance with any formalities connected with the said CONTRACT or alterations which may be made in terms of the said CONTRACT, or in the WORK to be done under it, or the giving by the Owner of any extension of time for the performance of the said CONTRACT, or any other forbearance on the part of the Owner or Principal to the other, shall not in any way release the Principal or SURETY, or either of them, their heirs, their personal representatives, their successors, or their assigns from liability hereunder, notice to the SURETY of any such changes, alterations, extensions, or forbearance being hereby waived.

2. Certain claimants seeking the protection of this BOND must timely comply with the strict requirements set forth in Section 255.05, Florida Statutes, and as otherwise provided by law.

3. As concerns payment for labor, MATERIALS, and supplies, as affects certain claimants, no legal action shall be instituted against the Principal or SURETY on this BOND after one year from the performance of labor or the completion of delivery of the MATERIALS or supplies as is specifically mandated pursuant to Section 255.05, Florida Statutes.

THIS BOND DATED THIS ___ day of _____, 19__ (the date of issue by the SURETY or by the SURETY's agent and the date of such agent's Power of Attorney).

ATTEST:

PRINCIPAL: _____
PRINTED NAME

_____
WITNESS

BY: _____(SEAL)
AUTHORIZED SIGNATURE
(PRINCIPAL)

_____
WITNESS

_____
PRINTED NAME

_____
TITLE OF PERSON SIGNING ABOVE

-OR-

ATTEST:

_____
WITNESS

BY: _____(SEAL)
AS ATTORNEY IN FACT
(ATTACH POWER)

_____
WITNESS

_____
PRINTED NAME

_____
BUSINESS ADDRESS

_____
BUSINESS TELEPHONE

STATE OF _____)
COUNTY OF _____)

I, the undersigned authority, hereby certify that on this ___day of _____, 19__, before me personally appeared _____ and _____ to me known to be the person(s) described in and who executed the foregoing instrument, and acknowledge the execution thereof to be a free act and deed for the uses and purposes therein mentioned.

WITNESS my hand and official seal and the date aforesaid.

_____(SEAL)
NOTARY PUBLIC

My Commission Expires:

ATTEST:

SURETY: _____
PRINTED NAME

_____
BUSINESS ADDRESS

_____

_____
WITNESS

BY: _____(SEAL)
AUTHORIZED SIGNATURE

_____
WITNESS

_____
PRINTED NAME

-OR-

ATTEST:

_____
WITNESS

BY: _____(SEAL)
AS ATTORNEY IN FACT
(ATTACH POWER)

_____
WITNESS

_____
PRINTED NAME

_____
AGENT'S LICENSE NO.

_____
AGENCY NAME

_____
AGENCY MAILING ADDRESS

_____
AGENCY TELEPHONE NO.

_____
AGENCY FAX NO.

STATE OF _____)
COUNTY OF _____)

I, the undersigned authority, hereby certify that on this ___day of _____, 19__, before me personally appeared _____ and _____ _____, to me known to be the person(s) described in and who executed the foregoing instrument, and acknowledged the execution thereof to be a free act and deed for the uses and purposes therein mentioned.

WITNESS my hand and official seal and the date aforesaid.

_____(SEAL)
NOTARY PUBLIC

My Commission Expires:

GENERAL CONDITIONS

SECTION 00700

This document has important legal consequences: consultation with an attorney is encouraged with respect to its completion or modification.

STANDARD GENERAL CONDITIONS OF THE CONSTRUCTION CONTRACT

Prepared by

Engineers Joint Contract Documents Committee

and

Issued and Published Jointly By

PROFESSIONAL ENGINEERS IN PRIVATE PRACTICE
A practice division of the
NATIONAL SOCIETY OF PROFESSIONAL ENGINEERS

AMERICAN CONSULTING ENGINEERS COUNCIL

AMERICAN SOCIETY OF CIVIL ENGINEERS

CONSTRUCTION SPECIFICATIONS INSTITUTE

This document has been approved and endorsed by

The Associated General Contractors of America

These General Conditions have been prepared for use with the Owner-Contractor Agreements (No. 1910-A-1 or 1910-8-A-2) (1990 Editions). Their provisions are interrelated and a change in one may necessitate a change in the others. Comments concerning their usage are contained in the Commentary on Agreements for Engineering Services and Contract Documents (No. 1910-9) (1986 Edition). For guidance in the preparation of Supplementary Conditions, see Guide to the Preparation of Supplementary Conditions (No. 1910-17) (1990 Edition). When bidding is involved, the Standard Form of Instructions to Bidders (No. 1910-12) (1990 Edition) may be used.

TABLE OF CONTENTS OF GENERAL CONDITIONS

Article or Paragraph Number & Title		*Page Number*
1. DEFINITIONS		13
1.1	Addenda	13
1.2	Agreement	13
1.3	Application for Payment	13
1.4	Asbestos	13
1.5	Bid	13
1.6	Bidding Documents	13
1.7	Bidding Requirements	13
1.8	Bonds	13
1.9	Change Order	13
1.10	Contract Documents	13
1.11	Contract Price	13
1.12	Contract Times	13
1.13	CONTRACTOR	13
1.14	*defective*	13
1.15	Drawings	13
1.16	Effective Date of the Agreement	13
1.17	ENGINEER	13
1.18	ENGINEER's Consultant	13
1.19	Field Order	13
1.20	General Requirements	14
1.21	Hazardous Waste	14
1.22	Laws and Regulations; Laws or Regulations	14
1.23	Liens	14
1.24	Milestone	14
1.25	Notice of Award	14
1.26	Notice to Proceed	14
1.27	OWNER	14
1.28	Partial Utilization	14
1.29	PCBs	14
1.30	Petroleum	14
1.31	Project	14
1.32	Radioactive Material	14
1.33	Resident Project Representative	14
1.34	Samples	14
1.35	Shop Drawings	14
1.36	Specifications	14
1.37	Subcontractor	14
1.38	Substantial Completion	14
1.39	Supplementary Conditions	14
1.40	Supplier	14
1.41	Underground Facilities	14
1.42	Unit Price Work	14
1.43	Work	15
1.44	Work Change Directive	15
1.45	Written Amendment	15
2. PRELIMINARY MATTERS		15
2.1	Delivery of Bonds	15
2.2	Copies of Documents	15
2.3	Commencement of Contract Times; Notice to Proceed	15
2.4	Starting the Work	15
2.5-2.7	Before Starting Construction; CONTRACTOR's Responsibility to Report: Preliminary Schedules; Delivery of Certificates of Insurance	15
2.8	Preconstruction Conference	15
2.9	Initially Acceptable Schedules	16
3. CONTRACT DOCUMENTS: INTENT, AMENDING, REUSE		16
3.1-3.2	Intent	16
3.3	Reference to Standards and Specifications of Technical Societies; Reporting and Resolving Discrepancies	16
3.4	Intent of Certain Terms or Adjectives	17
3.5	Amending Contract Documents	17
3.6	Supplementing Contract Documents	17
3.7	Reuse of Documents	17
4. AVAILABILITY OF LANDS; SUBSURFACE AND PHYSICAL CONDITIONS; REFERENCE POINTS		17
4.1	Availability of Lands	17
4.2	Subsurface and Physical Conditions	17
4.2.1	Reports and Drawings	17
4.2.2	Limited Reliance by CONTRACTOR Authorized; Technical Data	18
4.2.3	Notice of Differing Subsurface or Physical Conditions	18
4.2.4	ENGINEER's Review	18
4.2.5	Possible Contract Documents Change	18
4.2.6	Possible Price and Times Adjustments	18
4.3	Physical Conditions—Underground Facilities	18
4.3.1	Shown or Indicated	18
4.3.2	Not Shown or Indicated	19
4.4	Reference Points	19
4.5	Asbestos, PCBs, Petroleum, Hazardous Waste or Radioactive Material	19
5. BONDS AND INSURANCE		20
5.1-5.2	Performance, Payment and Other Bonds	20
5.3	Licensed Sureties and Insurers; Certificates of Insurance	20
5.4	CONTRACTOR's Liability Insurance	20
5.5	OWNER's Liability Insurance	21
5.6	Property Insurance	21
5.7	Boiler and Machinery or Additional Property Insurance	21
5.8	Notice of Cancellation Provisions	21
5.9	CONTRACTOR's Responsibility for Deductible Amounts	22
5.10	Other Special Insurance	22
5.11	Waiver of Rights	22

Article or Paragraph Number & Title		*Page Number*
13.4	OWNER's Responsibilities; Independent Testing Laboratory	36
13.5	CONTRACTOR's Responsibilities	36
13.6-13.7	CoveringWork Prior to Inspection, Testing or Approval	36
13.8-13.9	Uncovering Work at ENGINEER's Request	36
13.10	OWNER May Stop the Work	36
13.11	Correction or Removal of Defective Work	37
13.12	Correction Period	
13.13	Acceptance of Defective Work	37
13.14	OWNER May Correct Defective Work	37
14. PAYMENTS TO CONTRACTOR AND COMPLETION		37
14.1	Schedule of Values	37
14.2	Application for Progress Payment	38
14.3	CONTRACTOR's Warranty of Title	38
14.4-14.7	Review of Applications for Progress Payments	38
14.8-14.9	Substantial Completion	39
14.10	Partial Utilization	39
14.11	Final Inspection	39
14.12	Final Application for Payment	40
14.13-14.14	Final Payment and Acceptance	40
14.15	Waiver of Claims	40
15. SUSPENSION OF WORK AND TERMINATION		40
15.1	OWNER May Suspend Work	40
15.2-15.4	OWNER May Terminate	40
15.5	CONTRACTOR May Stop Work or Terminate	41
16. DISPUTE RESOLUTION		41
17. MISCELLANEOUS		42
17.1	Giving Notice	42
17.2	Computation of Times	42
17.3	Notice of Claim	42
17.4	Cumulative Remedies	42
17.5	Professional Fees and Court Costs Included	42
EXHIBIT GC-A (Optional): Dispute Resolution Agreement (Optional)		GC-A1
16.1-16.6	Arbitration	GC-A1
16.7	Mediation	GC-A2

Article or Paragraph Number

Cost Records 11.7
definition of 1.9
emergencies 6.23
ENGINEER's responsibility 9.8, 10.4, 11.2, 12.1
execution of 10.4
Indemnification 6.12, 6.16, 6.31, 6.33
Insurance, Bonds and 5.10, 5.13, 10.5
OWNER may terminate 15.2-15.4
OWNER's Responsibility 8.6, 10.4
Physical Conditions—
Subsurface and, ... 4.2
Underground Facilities 4.3.2
Record Documents 6.19
Scope of Change 10.3-10.4
Substitutes 6.7.3, 6.8.2
Unit Price Work 11.9
value of Work, covered by 11.3
Changes in the Work 10
Notification of surety 10.5
OWNER's and CONTRACTOR's responsibilities 10.4
Right to an adjustment 10.2
Scope of change 10.3-10.4
Claims—
against CONTRACTOR 6.16
against ENGINEER 6.32
against OWNER 6.32
Change of Contract Price 9.4, 11.2
Change of Contract Times 9.4, 12.1
CONTRACTOR's 4, 7.1, 9.4, 9.5, 9.11, 10.2, 11.2, 11.9, 12.1, 14.8, 15.1, 15.5, 17.3
CONTRACTOR's Fee 11.6
CONTRACTOR's liability 5.4, 6.12, 6.16, 6.31
Cost of the Work 11.4, 11.5
Decisions on Disputes 9.11, 9.12
Dispute Resolution 16.1
Dispute Resolution Agreement 16.1-16.6
ENGINEER as initial interpretor 9.11
Lump Sum Pricing 11.3.2
Notice of 17.3
OWNER's 9.4, 9.5, 9.11, 10.2, 11.2, 11.9, 12.1, 13.9, 13.13, 13.14, 17.3
OWNER's liability 5.5
OWNER may refuse to make payment 14.7
Professional Fees and Court Costs Included 17.5
request for formal decision on 9.11
Substitute items 6.7.1.2
Time Extension 12.1
Time requirements 9.11, 12.1
Unit Price Work 11.9.3
Value of 11.3
Waiver of—on Final Payment 14.14, 14.15
Work Change Directive 10.2
written notice required 9.11, 11.2, 12.1
Clarifications and Interpretations 3.6.3, 9.4, 9.11
Clean Site 6.17
Codes of Technical Society, Organization or Association 3.3.3
Commencement of Contract Times 2.3
Communications—
general 6.2, 6.9.2, 8.1
Hazard Communication Programs 6.22
Completion—
Final Application for Payment 14.12
Final Inspection 14.11
Final Payment and Acceptance 14.13-14.14
Partial Utilization 14.10
Substantial Completion 1.38, 14.8-14.9
Waiver of Claims 14.15
Computation of Times 17.2.1-17.2.2
Concerning Subcontractors, Suppliers and Others 6.8-6.11
Conferences—
initially acceptable schedules 2.9
preconstruction 2.8
Conflict, Error, Ambiguity, Discrepancy—
CONTRACTOR to Report 2.5, 3.3.2
Construction, before starting by CONTRACTOR 2.5-2.7
Construction Machinery, Equipment, etc. 6.4
Continuing the Work 6.29, 10.4
Contract Documents—
Amending 3.5
Bonds 5.1
Cash Allowances 11.8
Change of Contract Price 11
Change of Contract Times 12
Changes in the Work 10.4-10.5
check and verify 2.5
Clarifications and Interpretations 3.2, 3.6, 9.4, 9.11
definition of 1.10
ENGINEER as initial interpreter of 9.11
ENGINEER as OWNER's representative 9.1
general 3
Insurance 5.3
Intent 3.1-3.4
minor variations in the Work 3.6
OWNER's responsibility to furnish data 8.3
OWNER's responsibility to make prompt payment 8.3, 14.4, 14.13
precedence 3.1, 3.3.3
Record Documents 6.19
Reference to Standards and Specifications of Technical Societies 3.3
Related Work 7.2
Reporting and Resolving Discrepancies 2.5, 3.3
Reuse of 3.7
Supplementing 3.6
Termination of ENGINEER's Employment 8.2
Unit Price Work 11.9
variations 3.6, 6.23, 6.27
Visits to Site, ENGINEER's 9.2
Contract Price—
adjustment of 3.5, 4.1, 9.4, 10.3, 11.2-11.3
Change of 11
Decision on Disputes 9.11
definition of 1.11
Contract Times—
adjustment of 3.5, 4.1, 9.4, 10.3, 12
Change of 12.1-12.4

Article or Paragraph Number

CONTRACTOR's responsibility 6.9.2
Copies of Documents 2.2
Correction Period 13.12
Correction, Removal or Acceptance of Defective Work
in general 10.4.1, 13.10-13.14
Acceptance of Defective Work 13.13
Correction or Removal of Defective Work 6.30, 13.11
Correction Period 13.12
OWNER May Correct Defective Work 13.14
OWNER May Stop Work 13.10
Cost—
of Tests and Inspections 13.4
Records 11.7
Cost of the Work—
Bonds and insurance, additional 11.4.5.9
Cash Discounts 11.4.2
CONTRACTOR's Fee 11.6
Employee Expenses 11.4.5.1
Exclusions to 11.5
General 11.4-11.5
Home office and overhead expenses 11.5
Losses and damages 11.4.5.6
Materials and equipment 11.4.2
Minor expenses 11.4.5.8
Payroll costs on changes 11.4.1
performed by Subcontractors 11.4.3
Records 11.7
Rentals of construction equipment and machinery . 11.4.5.3
Royalty payments, permits and license fees 11.4.5.5
Site office and temporary facilities 11.4.5.2
Special Consultants, CONTRACTOR's 11.4.4
Supplemental 11.4.5
Taxes related to the Work 11.4.5.4
Tests and Inspection 13.4
Trade Discounts 11.4.2
Utilities, fuel and sanitary facilities 11.4.5.7
Work after regular hours 11.4.1
Covering Work 13.6-13.7
Cumulative Remedies 17.4-17.5
Cutting, fitting and patching 7.2
Data, to be furnished by OWNER 8.3
Day—definition of 17.2.2
Decisions on Disputes 9.11, 9.12
defective—definition of 1.14
defective Work—
Acceptance of 10.4.1, 13.13
Correction or Removal of 10.4.1, 13.11
Correction Period 13.12
in general 13, 14.7, 14.11
Observation by ENGINEER 9.2
OWNER May Stop Work 13.10
Prompt Notice of Defects 13.1
Rejecting 9.6
Uncovering the Work 13.8
Definitions 1
Delays 4.1, 6.29, 12.3-12.4
Delivery of Bonds 2.1
Delivery of certificates of insurance 2.7

Article or Paragraph Number

Determinations for Unit Prices 9.10
Differing Subsurface or Physical Conditions
Notice of 4.2.3
ENGINEER's Review 4.2.4
Possible Contract Documents Change 4.2.5
Possible Price and Times Adjustments 4.2.6
Discrepancies-Reporting and Resolving 2.5, 3.3.2, 6.14.2
Dispute Resolution—
Agreement 16.1-16.6
Arbitration 16.1-16.5
general 16
Mediation 16.6
Dispute Resolution Agreement 16.1-16.6
Disputes, Decisions by ENGINEER 9.11-9.12
Documents—
Copies of 2.2
Record 6.19
Reuse of 3.7
Drawings—definition of 1.15
Easements 4.1
Effective date of Agreement—definition of 1.16
Emergencies 6.23
ENGINEER—
as initial interpreter on disputes 9.11-9.12
definition of 1.17
Limitations on authority and responsibilities 9.13
Replacement of 8.2
Resident Project Representative 9.3
ENGINEER's Consultant—definition of 1.18
ENGINEER's—
authority and responsibility, limitations on 9.13
Authorized Variations in the Work 9.5
Change Orders, responsibility for 9.7, 10, 11, 12
Clarifications and Interpretations 3.6.3, 9.4
Decisions on Disputes 9.11-9.12
defective Work, notice of 13.1
Evaluation of Substitute Items 6.7.3
Liability 6.32, 9.12
Notice Work is Acceptable 14.13
Observations 6.30.2, 9.2
OWNER's Representative 9.1
Payments to the CONTRACTOR, Responsibility for 9.9, 14
Recommendation of Payment 14.4, 14.13
Responsibilities—
Limitations on 9.11-9.13
Review of Reports on Differing Subsurface and Physical Conditions 4.2.4
Shop Drawings and Samples, review responsibility 6.26
Status During Construction—
authorized variations in the Work 9.5
Clarifications and Interpretations 9.4
Decisions on Disputes 9.11-9.12
Determinations on Unit Price 9.10
ENGINEER as Initial Interpreter 9.11-9.12
ENGINEER's Responsibilities 9.1-9.12

Article or Paragraph Number

Reference to in Contract Documents 3.3.1
Materials and equipment—
furnished by CONTRACTOR 6.3
not incorporated in Work 14.2
Materials or equipment—equivalent 6.7
Mediation (Optional) 16.7
Milestones—definition of 1.24
Miscellaneous—
Computation of Times 17.2
Cumulative Remedies 17.4
Giving Notice 17.1
Notice of Claim 17.3
Professional Fees and Court Costs Included 17.5
Multi-prime contracts 7
Not Shown or Indicated 4.3.2
Notice of—
Acceptability of Project 14.13
Award, definition of 1.25
Claim 17.3
Defects, ... 13.1
Differing Subsurface or Physical Conditions 4.2.3
Giving 17.1
Tests and Inspections 13.3
Variation, Shop Drawing and Sample 6.27
Notice to Proceed—
definition of 1.26
giving of 2.3
Notification to Surety 10.5
Observations, by ENGINEER 6.30, 9.2
Occupancy of the Work 5.15, 6.30.2.4, 14.10
Omissions or acts by CONTRACTOR 6.9, 9.13
"Open peril" policy form, Insurance 5.6.2
Option to Replace 5.14
"Or Equal" Items 6.7
Other work 7
Overtime Work—prohibition of 6.3
OWNER—
Acceptance of defective Work 13.13
appoint an ENGINEER 8.2
as fiduciary 5.12-5.13
Availability of Lands, responsibility 4.1
definition of 1.27
data, furnish 8.3
May Correct Defective Work 13.14
May refuse to make payment 14.7
May Stop the Work 13.10
may suspend work,
terminate 8.8, 13.10, 15.1-15.4
Payment, make prompt 8.3, 14.4, 14.13
performance of other Work 7.1
permits and licenses, requirements 6.13
purchased insurance requirements 5.6-5.10
OWNER's—
Acceptance of the Work 6.30.2.5
Change Orders, obligation to
execute 8.6, 10.4
Communications 8.1
Coordination of the Work 7.4
Disputes, request for decision 9.11

Article or Paragraph Number

Inspections, tests and approvals 8.7, 13.4
Liability Insurance 5.5
Notice of Defects 13.1
Representative—During Construction,
ENGINEER's Status 9.1
Responsibilities—
Asbestos, PCB's, Petroleum, Hazardous
Waste on Radioactive Material 8.10
Change Orders 8.6
Changes in the Work 10.1
communications 8.1
CONTRACTOR's responsibilities 8.9
evidence of financial arrangements 8.11
inspections, tests and approvals 8.7
Insurance 8.5
lands and easements 8.4
prompt payment by 8.3
replacement of ENGINEER 8.2
reports and tests 8.4
stop or suspend Work 8.8, 13.10, 15.1
terminate CONTRACTOR's services 8.8, 15.2
separate representative at site 9.3
independent testing 13.4
use or occupancy of the
Work 5.15, 14.10
written consent or approval
required 9.1, 6.3, 11.4
written notice
required 7.1, 9.4, 9.11, 11.2, 11.9, 14.7, 15.4
PCBs—
definition of 1.29
general 4.5
OWNER's responsibility for 8.10
Partial Utilization—
definition of 1.28
general 6.30.2.4, 14.10
Property Insurance 5.15
Patent Fees and Royalties 6.12
Payment Bonds 5.1-5.2
Payments, Recommendation of 14.4-14.7, 14.13
Payments to CONTRACTOR and Completion—
Application for Progress Payments 14.2
CONTRACTOR's Warranty of Title 14.3
Final Application for Payment 14.12
Final Inspection 14.11
Final Payment and Acceptance 14.13-14.14
general 8.3, 14
Partial Utilization 14.10
Retainage 14.2
Review of Applications for Progress
Payments 14.4-14.7
prompt payment 8.3
Schedule of Values 14.1
Substantial Completion 14.8-14.9
Waiver of Claims 14.15
when payments due 14.4, 14.13
withholding payment 14.7
Performance Bonds 5.1-5.2
Permits 6.13

Article or Paragraph Number

Shop Drawings—
and Samples, general 6.24-6.28
Change Orders & Applications for Payments, and 9.7-9.9
definition of 1.35
ENGINEER's approval of 3.6.2
ENGINEER's responsibility for review 9.7, 6.24-6.28
related Work 6.28
review procedures 2.8, 6.24-6.28
submittal required 6.24.1
Submittal Procedures 6.25
use to approve substitutions 6.7.3
Shown or Indicated 4.3.1
Site Access 7.2, 13.2
Site Cleanliness 6.17
Site, Visits to—
by ENGINEER 9.2, 13.2
by others 13.2
"Special causes of loss" policy form, insurance 5.6.2
Specifications—
definition of 1.36
of Technical Societies, reference to 3.3.1
precedence 3.3.3
Standards and Specifications of Technical Societies 3.3
Starting Construction, Before 2.5-2.8
Starting the Work 2.4
Stop or Suspend Work—
by CONTRACTOR 15.5
by OWNER 8.8, 13.10, 15.1
Storage of materials and equipment 4.1, 7.2
Structural Loading, Safety 6.18
Subcontractor—
Concerning, ... 6.8-6.11
definition of 1.37
delays 12.3
waiver of rights 6.11
Subcontractors—in general 6.8-6.11
Subcontracts—required provisions 5.11, 6.11, 11.4.3
Submittals—
Applications for Payment 14.2
Maintenance and Operation Manuals 14.12
Procedures 6.25
Progress Schedules 2.6, 2.9
Samples 6.24-6.28
Schedule of Values 2.6, 14.1
Schedule of Shop Drawings and Samples Submissions 2.6, 2.8-2.9
Shop Drawings 6.24-6.28
Substantial Completion—
certification of 6.30.2.3, 14.8-14.9
definition of 1.38
Substitute Construction Methods or Procedures 6.7.2
Substitutes and "Or Equal" Items 6.7
CONTRACTOR's Expense 6.7.1.3
ENGINEER's Evaluation 6.7.3
"Or-Equal" 6.7.1
Substitute Construction Methods of Procedures 6.7.2

Article or Paragraph Numb

Substitute Items 6.7.1
Subsurface and Physical Conditions—
Drawings of, in or relating to 4.2.1
ENGINEER's Review 4.2
general ..... 4.
Limited Reliance by CONTRACTOR Authorized ..... 4.2.
Notice of Differing Subsurface or Physical Conditions ..... 4.2.
Physical Conditions ..... 4.2.1.
Possible Contract Documents Change ..... 4.2.
Possible Price and Times Adjustments ..... 4.2.
Reports and Drawings ..... 4.2.
Subsurface and ..... 4.
Subsurface Conditions at the Site ..... 4.2.1.
Technical Data ..... 4.2.
Supervision—
CONTRACTOR's responsibility ..... 6.
OWNER shall not supervise ..... 8.
ENGINEER shall not supervise ..... 9.2, 9.13.
Superintendence ..... 6.
Superintendent, CONTRACTOR's resident ..... 6.
Supplemental costs 11.4.5
Supplementary Conditions—
definition of 1.39
principal reference to 1.10, 1.18, 2.2, 2.7, 4.2, 4.3, 5.1, 5.3, 5.4, 5.6-5.9, 5.11, 6.8, 6.13, 7.4, 8.11, 9.3, 9.10
Supplementing Contract Documents 3.6
Supplier—
definition of 1.40
principal references to 3.7, 6.5, 6.8-6.11, 6.20, 6.24, 9.13, 14.12
Waiver of Rights 6.11
Surety—
consent to final payment 14.12, 14.14
ENGINEER has no duty to 9.13
Notification of 10.1, 10.5, 15.2
qualification of 5.1-5.3
Survival of Obligations 6.34
Suspend Work, OWNER May 13.10, 15.1
Suspension of Work and Termination— 15
CONTRACTOR May Stop Work or Terminate 15.5
OWNER May Suspend Work 15.1
OWNER May Terminate 15.2-15.4
Taxes-Payment by CONTRACTOR 6.15
Technical Data—
Limited Reliance by CONTRACTOR 4.2.2
Possible Price and Times Adjustments 4.2.6
Reports of Differing Subsurface and Physical Conditions 4.2.3
Temporary construction facilities 4.1
Termination—
by CONTRACTOR 15.5
by OWNER 8.8, 15.1-15.4
of ENGINEER's employment 8.2
Suspension of Work-in general 15
Terms and Adjectives 3.4
Tests and Inspections—

GENERAL CONDITIONS

ARTICLE 1—DEFINITIONS

Wherever used in these General Conditions or in the other Contract Documents the following terms have the meanings indicated which are applicable to both the singular and plural thereof:

1.1. *Addenda*—Written or graphic instruments issued prior to the opening of Bids which clarify, correct or change the Bidding Requirements or the Contract Documents.

1.2. *Agreement*—The written contract between OWNER and CONTRACTOR covering the Work to be performed; other Contract Documents are attached to the Agreement and made a part thereof as provided therein.

1.3. *Application for Payment*—The form accepted by ENGINEER which is to be used by CONTRACTOR in requesting progress or final payments and which is to be accompanied by such supporting documentation as is required by the Contract Documents.

1.4. *Asbestos*—Any material that contains more than one percent asbestos and is friable or is releasing asbestos fibers into the air above current action levels established by the United States Occupational Safety and Health Administration.

1.5. *Bid*—The offer or proposal of the bidder submitted on the prescribed form setting forth the prices for the Work to be performed.

1.6. *Bidding Documents*—The advertisement or invitation to Bid, instructions to bidders, the Bid form, and the proposed Contract Documents (including all Addenda issued prior to receipt of Bids).

1.7. *Bidding Requirements*—The advertisement or invitation to Bid, instructions to bidders, and the Bid form.

1.8. *Bonds*—Performance and Payment bonds and other instruments of security.

1.9. *Change Order*—A document recommended by ENGINEER, which is signed by CONTRACTOR and OWNER and authorizes an addition, deletion or revision in the Work, or an adjustment in the Contract Price or the Contract Times, issued on or after the Effective Date of the Agreement.

1.10. *Contract Documents*—The Agreement, Addenda (which pertain to the Contract Documents), CONTRACTOR's Bid (including documentation accompanying the Bid and any post Bid documentation submitted prior to the Notice of Award) when attached as an exhibit to the Agreement, the Notice to Proceed, the Bonds, these General Conditions, the Supplementary Conditions, the Specifications and the Drawings as the same are more specifically identified in the Agreement, together with all Written Amendments, Change Orders, Work Change Directives, Field Orders and ENGINEER's written interpretations and clarifications issued pursuant to paragraphs 3.5, 3.6.1, and 3.6.3 on or after the Effective Date of the Agreement. Shop Drawing submittals approved pursuant to paragraphs 6.26 and 6.27 and the reports and drawings referred to in paragraphs 4.2.1.1 and 4.2.2.2 are not Contract Documents.

1.11. *Contract Price*—The moneys payable by OWNER to CONTRACTOR for completion of the Work in accordance with the Contract Documents as stated in the Agreement (subject to the provisions of paragraph 11.9.1 in the case of Unit Price Work).

1.12. *Contract Times*—The numbers of days or the dates stated in the Agreement: (i) to achieve Substantial Completion, and (ii) to complete the Work so that it is ready for final payment as evidenced by ENGINEER's written recommendation of final payment in accordance with paragraph 14.13.

1.13. *CONTRACTOR*—The person, firm or corporation with whom OWNER has entered into the Agreement.

1.14. *defective*—An adjective which when modifying the word Work refers to Work that is unsatisfactory, faulty or deficient, in that it does not conform to the Contract Documents, or does not meet the requirements of any inspection, reference standard, test or approval referred to in the Contract Documents, or has been damaged prior to ENGINEER's recommendation of final payment (unless responsibility for the protection thereof has been assumed by OWNER at Substantial Completion in accordance with paragraph 14.8 or 14.10).

1.15. *Drawings*—The drawings which show the scope, extent and character of the Work to be furnished and performed by CONTRACTOR and which have been prepared or approved by ENGINEER and are referred to in the Contract Documents. Shop drawings are not Drawings as so defined.

1.16. *Effective Date of the Agreement*—The date indicated in the Agreement on which it becomes effective, but if no such date is indicated it means the date on which the Agreement is signed and delivered by the last of the two parties to sign and deliver.

1.17. *ENGINEER*—The person, firm or corporation named as such in the Agreement.

1.18. *ENGINEER's Consultant*—A person, firm or corporation having a contract with ENGINEER to furnish services as ENGINEER's independent professional associate or consultant with respect to the Project and who is identified as such in the Supplementary Conditions.

1.19. *Field Order*—A written order issued by ENGINEER which orders minor changes in the Work in accordance with paragraph 9.5 but which does not involve a change in the Contract Price or the Contract Times.

1.43. *Work*—The entire completed construction or the various separately identifiable parts thereof required to be furnished under the Contract Documents. Work includes and is the result of performing or furnishing labor and furnishing and incorporating materials and equipment into the construction, and performing or furnishing services and furnishing documents, all as required by the Contract Documents.

1.44. *Work Change Directive*—A written directive to CONTRACTOR, issued on or after the Effective Date of the Agreement and signed by OWNER and recommended by ENGINEER, ordering an addition, deletion or revision in the Work, or responding to differing or unforeseen physical conditions under which the Work is to be performed as provided in paragraph 4.2 or 4.3 or to emergencies under paragraph 6.23. A Work Change Directive will not change the Contract Price or the Contract Times, but is evidence that the parties expect that the change directed or documented by a Work Change Directive will be incorporated in a subsequently issued Change Order following negotiations by the parties as to its effect, if any, on the Contract Price or Contract Times as provided in paragraph 10.2.

1.45. *Written Amendment*—A written amendment of the Contract Documents, signed by OWNER and CONTRACTOR on or after the Effective Date of the Agreement and normally dealing with the nonengineering or nontechnical rather than strictly construction-related aspects of the Contract Documents.

ARTICLE 2—PRELIMINARY MATTERS

Delivery of Bonds:

2.1. When CONTRACTOR delivers the executed Agreements to OWNER, CONTRACTOR shall also deliver to OWNER such Bonds as CONTRACTOR may be required to furnish in accordance with paragraph 5.1.

Copies of Documents:

2.2. OWNER shall furnish to CONTRACTOR up to ten copies (unless otherwise specified in the Supplementary Conditions) of the Contract Documents as are reasonably necessary for the execution of the Work. Additional copies will be furnished, upon request, at the cost of reproduction.

Commencement of Contract Times; Notice to Proceed:

2.3. The Contract Times will commence to run on the thirtieth day after the Effective Date of the Agreement, or, if a Notice to Proceed is given, on the day indicated in the Notice to Proceed. A Notice to Proceed may be given at any time within thirty days after the Effective Date of the Agreement. In no event will the Contract Times commence to run later than the sixtieth day after the day of Bid opening or the thirtieth day after the Effective Date of the Agreement, whichever date is earlier.

Starting the Work:

2.4. CONTRACTOR shall start to perform the Work on the date when the Contract Times commence to run, but no Work shall be done at the site prior to the date on which the Contract Times commence to run.

Before Starting Construction:

2.5. Before undertaking each part of the Work, CONTRACTOR shall carefully study and compare the Contract Documents and check and verify pertinent figures shown thereon and all applicable field measurements. CONTRACTOR shall promptly report in writing to ENGINEER any conflict, error, ambiguity or discrepancy which CONTRACTOR may discover and shall obtain a written interpretation or clarification from ENGINEER before proceeding with any Work affected thereby; however, CONTRACTOR shall not be liable to OWNER or ENGINEER for failure to report any conflict, error, ambiguity or discrepancy in the Contract Documents, unless CONTRACTOR knew or reasonably should have known thereof.

2.6. Within ten days after the Effective Date of the Agreement (unless otherwise specified in the General Requirements), CONTRACTOR shall submit to ENGINEER for review:

2.6.1. a preliminary progress schedule indicating the times (numbers of days or dates) for starting and completing the various stages of the Work, including any Milestones specified in the Contract Documents;

2.6.2. a preliminary schedule of Shop Drawing and Sample submittals which will list each required submittal and the times for submitting, reviewing and processing such submittal;

2.6.3. a preliminary schedule of values for all of the Work which will include quantities and prices of items aggregating the Contract Price and will subdivide the Work into component parts in sufficient detail to serve as the basis for progress payments during construction. Such prices will include an appropriate amount of overhead and profit applicable to each item of Work.

2.7. Before any Work at the site is started, CONTRACTOR and OWNER shall each deliver to the other, with copies to each additional insured identified in the Supplementary Conditions, certificates of insurance (and other evidence of insurance which either of them or any additional insured may reasonably request) which CONTRACTOR and OWNER respectively are required to purchase and maintain in accordance with paragraphs 5.4, 5.6 and 5.7.

Preconstruction Conference:

2.8. Within twenty days after the Contract Times start to run, but before any Work at the site is started, a conference

performance of the Work or any duty or authority to undertake responsibility inconsistent with the provisions of paragraph 9.13 or any other provision of the Contract Documents.

3.4. Whenever in the Contract Documents the terms "as ordered," "as directed," "as required," "as allowed," "as approved" or terms of like effect or import are used, or the adjectives "reasonable," "suitable," "acceptable," "proper" or "satisfactory" or adjectives of like effect or import are used to describe a requirement, direction, review or judgment of ENGINEER as to the Work, it is intended that such requirement, direction, review or judgment will be solely to evaluate, in general, the completed Work for compliance with the requirements of and information in the Contract Documents and conformance with the design concept of the completed Project as a functioning whole as shown or indicated in the Contract Documents (unless there is a specific statement indicating otherwise). The use of any such term or adjective shall not be effective to assign to ENGINEER any duty or authority to supervise or direct the furnishing or performance of the Work or any duty or authority to undertake responsibility contrary to the provisions of paragraph 9.13 or any other provision of the Contract Documents.

Amending and Supplementing Contract Documents:

3.5. The Contract Documents may be amended to provide for additions, deletions and revisions in the Work or to modify the terms and conditions thereof in one or more of the following ways:

3.5.1. a formal Written Amendment,

3.5.2. a Change Order (pursuant to paragraph 10.4), or

3.5.3. a Work Change Directive (pursuant to paragraph 10.1).

3.6. In addition, the requirements of the Contract Documents may be supplemented, and minor variations and deviations in the Work may be authorized, in one or more of the following ways:

3.6.1. a Field Order (pursuant to paragraph 9.5),

3.6.2. ENGINEER's approval of a Shop Drawing or Sample (pursuant to paragraphs 6.26 and 6.27), or

3.6.3. ENGINEER's written interpretation or clarification (pursuant to paragraph 9.4).

Reuse of Documents:

3.7. CONTRACTOR, and any Subcontractor or Supplier or other person or organization performing or furnishing any of the Work under a direct or indirect contract with OWNER (i) shall not have or acquire any title to or ownership rights in any of the Drawings, Specifications or other documents (or copies of any thereof) prepared by or bearing the seal of ENGINEER or ENGINEER's Consultant, and (ii) shall not reuse any of such Drawings, Specifications, other documents or copies on extensions of the Project or any other project without written consent of OWNER and ENGINEER and specific written verification or adaption by ENGINEER.

ARTICLE 4—AVAILABILITY OF LANDS; SUBSURFACE AND PHYSICAL CONDITIONS; REFERENCE POINTS

Availability of Lands:

4.1. OWNER shall furnish, as indicated in the Contract Documents, the lands upon which the Work is to be performed, rights-of-way and easements for access thereto, and such other lands which are designated for the use of CONTRACTOR. Upon reasonable written request, OWNER shall furnish CONTRACTOR with a correct statement of record legal title and legal description of the lands upon which the Work is to be performed and OWNER's interest therein as necessary for giving notice of or filing a mechanic's lien against such lands in accordance with applicable Laws and Regulations. OWNER shall identify any encumbrances or restrictions not of general application but specifically related to use of lands so furnished with which CONTRACTOR will have to comply in performing the Work. Easements for permanent structures or permanent changes in existing facilities will be obtained and paid for by OWNER, unless otherwise provided in the Contract Documents. If CONTRACTOR and OWNER are unable to agree on entitlement to or the amount or extent of any adjustments in the Contract Price or the Contract Times as a result of any delay in OWNER's furnishing these lands, rights-of-way or easements, CONTRACTOR may make a claim therefor as provided in Articles 11 and 12. CONTRACTOR shall provide for all additional lands and access thereto that may be required for temporary construction facilities or storage of materials and equipment.

4.2. *Subsurface and Physical Conditions:*

4.2.1. *Reports and Drawings:* Reference is made to the Supplementary Conditions for identification of:

4.2.1.1. *Subsurface Conditions:* Those reports of explorations and tests of subsurface conditions at or contiguous to the site that have been utilized by ENGINEER in preparing the Contract Documents; and

4.2.1.2. *Physical Conditions:* Those drawings of physical conditions in or relating to existing surface or subsurface structures at or contiguous to the site (except Underground Facilities) that have been utilized by ENGINEER in preparing the Contract Documents.

information and data furnished to OWNER or ENGINEER by the owners of such Underground Facilities or by others. Unless it is otherwise expressly provided in the Supplementary Conditions:

4.3.1.1. OWNER and ENGINEER shall not be responsible for the accuracy or completeness of any such information or data; and

4.3.1.2. The cost of all of the following will be included in the Contract Price and CONTRACTOR shall have full responsibility for: (i) reviewing and checking all such information and data, (ii) locating all Underground Facilities shown or indicated in the Contract Documents, (iii) coordination of the Work with the owners of such Underground Facilities during construction, and (iv) the safety and protection of all such Underground Facilities as provided in paragraph 6.20 and repairing any damage thereto resulting from the Work.

4.3.2. *Not Shown or Indicated:* If an Underground Facility is uncovered or revealed at or contiguous to the site which was not shown or indicated in the Contract Documents, CONTRACTOR shall, promptly after becoming aware thereof and before further disturbing conditions affected thereby or performing any Work in connection therewith (except in an emergency as required by paragraph 6.23), identify the owner of such Underground Facility and give written notice to that owner and to OWNER and ENGINEER. ENGINEER will promptly review the Underground Facility and determine the extent, if any, to which a change is required in the Contract Documents to reflect and document the consequences of the existence of the Underground Facility. If ENGINEER concludes that a change in the Contract Documents is required, a Work Change Directive or a Change Order will be issued as provided in Article 10 to reflect and document such consequences. During such time, CONTRACTOR shall be responsible for the safety and protection of such Underground Facility as provided in paragraph 6.20. CONTRACTOR shall be allowed an increase in the Contract Price or an extension of the Contract Times, or both, to the extent that they are attributable to the existence of any Underground Facility that was not shown or indicated in the Contract Documents and that CONTRACTOR did not know of and could not reasonably have been expected to be aware of or to have anticipated. If OWNER and CONTRACTOR are unable to agree on entitlement to or the amount or length of any such adjustment in Contract Price or Contract Times, CONTRACTOR may make a claim therefor as provided in Articles 11 and 12. However, OWNER, ENGINEER and ENGINEER's Consultants shall not be liable to CONTRACTOR for any claims, costs, losses or damages incurred or sustained by CONTRACTOR on or in connection with any other project or anticipated project.

Reference Points:

4.4. OWNER shall provide engineering surveys to establish reference points for construction which in ENGINEER's judgment are necessary to enable CONTRACTOR to proceed with the Work. CONTRACTOR shall be responsible for laying out the Work, shall protect and preserve the established reference points and shall make no changes or relocations without the prior written approval of OWNER. CONTRACTOR shall report to ENGINEER whenever any reference point is lost or destroyed or requires relocation because of necessary changes in grades or locations, and shall be responsible for the accurate replacement or relocation of such reference points by professionally qualified personnel.

4.5. Asbestos, PCBs, Petroleum, Hazardous Waste or Radioactive Material:

4.5.1. OWNER shall be responsible for any Asbestos, PCBs, Petroleum, Hazardous Waste or Radioactive Material uncovered or revealed at the site which was not shown or indicated in Drawings or Specifications or identified in the Contract Documents to be within the scope of the Work and which may present a substantial danger to persons or property exposed thereto in connection with the Work at the site. OWNER shall not be responsible for any such materials brought to the site by CONTRACTOR, Subcontractor, Suppliers or anyone else for whom CONTRACTOR is responsible.

4.5.2. CONTRACTOR shall immediately: (i) stop all Work in connection with such hazardous condition and in any area affected thereby (except in an emergency as required by paragraph 6.23), and (ii) notify OWNER and ENGINEER (and thereafter confirm such notice in writing). OWNER shall promptly consult with ENGINEER concerning the necessity for OWNER to retain a qualified expert to evaluate such hazardous condition or take corrective action, if any. CONTRACTOR shall not be required to resume Work in connection with such hazardous condition or in any such affected area until after OWNER has obtained any required permits related thereto and delivered to CONTRACTOR special written notice: (i) specifying that such condition and any affected area is or has been rendered safe for the resumption of Work, or (ii) specifying any special conditions under which such Work may be resumed safely. If OWNER and CONTRACTOR cannot agree as to entitlement to or the amount or extent of an adjustment, if any, in Contract Price or Contract Times as a result of such Work stoppage or such special conditions under which Work is agreed by CONTRACTOR to be resumed, either party may make a claim therefor as provided in Articles 11 and 12.

4.5.3. If after receipt of such special written notice CONTRACTOR does not agree to resume such Work based on a reasonable belief it is unsafe, or does not agree to resume such Work under such special conditions, then OWNER may order such portion of the Work that is in connection with such hazardous condition or in such affected area to be deleted from the Work. If OWNER and CONTRACTOR cannot agree as to entitlement to or the amount or extent of an adjustment, if any, in Contract Price or Contract Times as a result of deleting such portion of the Work, then either party may make a claim therefor as provided in Articles 11 and 12. OWNER may have such deleted portion of the Work performed by OWNER's own forces or others in accordance with Article 7.

4.5.4. To the fullest extent permitted by Laws and Regulations, OWNER shall indemnify and hold harmless CONTRACTOR, Subcontractors, ENGINEER, ENGINEER's

The policies of insurance so required by this paragraph 5.4 to be purchased and maintained shall:

5.4.7. with respect to insurance required by paragraphs 5.4.3 through 5.4.6 inclusive, include as additional insureds (subject to any customary exclusion in respect of professional liability) OWNER, ENGINEER, ENGINEER's Consultants and any other persons or entities identified in the Supplementary Conditions, all of whom shall be listed as additional insureds, and include coverage for the respective officers and employees of all such additional insureds;

5.4.8. include the specific coverages and be written for not less than the limits of liability provided in the Supplementary Conditions or required by Laws or Regulations, whichever is greater;

5.4.9. include completed operations insurance;

5.4.10. include contractual liability insurance covering CONTRACTOR's indemnity obligations under paragraphs 6.12, 6.16 and 6.31 through 6.33;

5.4.11. contain a provision or endorsement that the coverage afforded will not be cancelled, materially changed or renewal refused until at least thirty days prior written notice has been given to OWNER and CONTRACTOR and to each other additional insured identified in the Supplementary Conditions to whom a certificate of insurance has been issued (and the certificates of insurance furnished by the CONTRACTOR pursuant to paragraph 5.3.2 will so provide);

5.4.12. remain in effect at least until final payment and at all times thereafter when CONTRACTOR may be correcting, removing or replacing *defective* Work in accordance with paragraph 13.12; and

5.4.13. with respect to completed operations insurance, and any insurance coverage written on a claims-made basis, remain in effect for at least two years after final payment (and CONTRACTOR shall furnish OWNER and each other additional insured identified in the Supplementary Conditions to whom a certificate of insurance has been issued evidence satisfactory to OWNER and any such additional insured of continuation of such insurance at final payment and one year thereafter).

OWNER's Liability Insurance:

5.5. In addition to the insurance required to be provided by CONTRACTOR under paragraph 5.4, OWNER, at OWNER's option, may purchase and maintain at OWNER's expense OWNER's own liability insurance as will protect OWNER against claims which may arise from operations under the Contract Documents.

Property Insurance:

5.6. Unless otherwise provided in the Supplementary Conditions, OWNER shall purchase and maintain property insurance upon the Work at the site in the amount of the full replacement cost thereof (subject to such deductible amounts as may be provided in the Supplementary Conditions or required by Laws and Regulations). This insurance shall:

5.6.1. include the interests of OWNER, CONTRACTOR, Subcontractors, ENGINEER, ENGINEER's Consultants and any other persons or entities identified in the Supplementary Conditions, each of whom is deemed to have an insurable interest and shall be listed as an insured or additional insured;

5.6.2. be written on a Builder's Risk "all-risk" or open peril or special causes of loss policy form that shall at least include insurance for physical loss or damage to the Work, temporary buildings, falsework and Work in transit and shall insure against at least the following perils fire, lightning, extended coverage, theft, vandalism and malicious mischief, earthquake, collapse, debris removal, demolition occasioned by enforcement of Laws and Regulations, water damage, and such other perils as may be specifically required by the Supplementary Conditions;

5.6.3. include expenses incurred in the repair or replacement of any insured property (including but not limited to fees and charges of engineers and architects);

5.6.4. cover materials and equipment stored at the site or at another location that was agreed to in writing by OWNER prior to being incorporated in the Work, provided that such materials and equipment have been included in an Application for Payment recommended by ENGINEER; and

5.6.5. be maintained in effect until final payment is made unless otherwise agreed to in writing by OWNER, CONTRACTOR and ENGINEER with thirty days written notice to each other additional insured to whom a certificate of insurance has been issued.

5.7. OWNER shall purchase and maintain such boiler and machinery insurance or additional property insurance as may be required by the Supplementary Conditions or Laws and Regulations which will include the interests of OWNER, CONTRACTOR, Subcontractors, ENGINEER, ENGINEER's Consultants and any other persons or entities identified in the Supplementary Conditions, each of whom is deemed to have an insurable interest and shall be listed as an insured or additional insured.

5.8. All the policies of insurance (and the certificates or other evidence thereof) required to be purchased and maintained by OWNER in accordance with paragraphs 5.6 and 5.7 will contain a provision or endorsement that the coverage afforded will not be cancelled or materially changed or renewal refused until at least thirty days' prior written notice has been given to OWNER and CONTRACTOR and to each other additional insured to whom a certificate of insurance has been issued and will contain waiver provisions in accordance with paragraph 5.11.

required to provide such coverage, and a Change Order shall be issued to adjust the Contract Price accordingly.

Partial Utilization—Property Insurance:

5.15. If OWNER finds it necessary to occupy or use a portion or portions of the Work prior to Substantial Completion of all the Work, such use or occupancy may be accomplished in accordance with paragraph 14.10; provided that no such use or occupancy shall commence before the insurers providing the property insurance have acknowledged notice thereof and in writing effected any changes in coverage necessitated thereby. The insurers providing the property insurance shall consent by endorsement on the policy or policies, but the property insurance shall not be cancelled or permitted to lapse on account of any such partial use or occupancy.

ARTICLE 6—CONTRACTOR'S RESPONSIBILITIES

Supervision and Superintendence:

6.1. CONTRACTOR shall supervise, inspect and direct the Work competently and efficiently, devoting such attention thereto and applying such skills and expertise as may be necessary to perform the Work in accordance with the Contract Documents. CONTRACTOR shall be solely responsible for the means, methods, techniques, sequences and procedures of construction, but CONTRACTOR shall not be responsible for the negligence of others in the design or specification of a specific means, method, technique, sequence or procedure of construction which is shown or indicated in and expressly required by the Contract Documents. CONTRACTOR shall be responsible to see that the completed Work complies accurately with the Contract Documents.

6.2. CONTRACTOR shall keep on the Work at all times during its progress a competent resident superintendent, who shall not be replaced without written notice to OWNER and ENGINEER except under extraordinary circumstances. The superintendent will be CONTRACTOR's representative at the site and shall have authority to act on behalf of CONTRACTOR. All communications to the superintendent shall be as binding as if given to CONTRACTOR.

Labor, Materials and Equipment:

6.3. CONTRACTOR shall provide competent, suitably qualified personnel to survey, lay out and construct the Work as required by the Contract Documents. CONTRACTOR shall at all times maintain good discipline and order at the site. Except as otherwise required for the safety or protection of persons or the Work or property at the site or adjacent thereto, and except as otherwise indicated in the Contract Documents, all Work at the site shall be performed during regular working hours and CONTRACTOR will not permit overtime work or the performance of Work on Saturday, Sunday or any legal holiday without OWNER's written consent given after prior written notice to ENGINEER.

6.4. Unless otherwise specified in the General Requirements, CONTRACTOR shall furnish and assume full responsibility for all materials, equipment, labor, transportation, construction equipment and machinery, tools, appliances, fuel, power, light, heat, telephone, water, sanitary facilities, temporary facilities and all other facilities and incidentals necessary for the furnishing, performance, testing, start-up and completion of the Work.

6.5. All materials and equipment shall be of good quality and new, except as otherwise provided in the Contract Documents. All warranties and guarantees specifically called for by the Specifications shall expressly run to the benefit of OWNER. If required by ENGINEER, CONTRACTOR shall furnish satisfactory evidence (including reports of required tests) as to the kind and quality of materials and equipment. All materials and equipment shall be applied, installed, connected, erected, used, cleaned and conditioned in accordance with instructions of the applicable Supplier, except as otherwise provided in the Contract Documents.

Progress Schedule:

6.6. CONTRACTOR shall adhere to the progress schedule established in accordance with paragraph 2.9 as it may be adjusted from time to time as provided below:

6.6.1. CONTRACTOR shall submit to ENGINEER for acceptance (to the extent indicated in paragraph 2.9) proposed adjustments in the progress schedule that will not change the Contract Times (or Milestones). Such adjustments will conform generally to the progress schedule then in effect and additionally will comply with any provisions of the General Requirements applicable thereto.

6.6.2. Proposed adjustments in the progress schedule that will change the Contract Times (or Milestones) shall be submitted in accordance with the requirements of paragraph 12.1. Such adjustments may only be made by a Change Order or Written Amendment in accordance with Article 12.

6.7. ***Substitutes and "Or-Equal" Items:***

6.7.1. Whenever an item of material or equipment is specified or described in the Contract Documents by using the name of a proprietary item or the name of a particular Supplier, the specification or description is intended to establish the type, function and quality required. Unless the specification or description contains or is followed by words reading that no like, equivalent or "or-equal" item or no substitution is permitted, other items of material or equipment or material or equipment of other Suppliers may be accepted by ENGINEER under the following circumstances:

substitution and an appropriate Change Order will be issued or Written Amendment signed. No acceptance by OWNER or ENGINEER of any such Subcontractor, Supplier or other person or organization shall constitute a waiver of any right of OWNER or ENGINEER to reject *defective* Work.

6.9.1. CONTRACTOR shall be fully responsible to OWNER and ENGINEER for all acts and omissions of the Subcontractors, Suppliers and other persons and organizations performing or furnishing any of the Work under a direct or indirect contract with CONTRACTOR just as CONTRACTOR is responsible for CONTRACTOR's own acts and omissions. Nothing in the Contract Documents shall create for the benefit of any such Subcontractor, Supplier or other person or organization any contractual relationship between OWNER or ENGINEER and any such Subcontractor, Supplier or other person or organization, nor shall it create any obligation on the part of OWNER or ENGINEER to pay or to see to the payment of any moneys due any such Subcontractor, Supplier or other person or organization except as may otherwise be required by Laws and Regulations.

6.9.2. CONTRACTOR shall be solely responsible for scheduling and coordinating the Work of Subcontractors, Suppliers and other persons and organizations performing or furnishing any of the Work under a direct or indirect contract with CONTRACTOR. CONTRACTOR shall require all Subcontractors, Suppliers and such other persons and organizations performing or furnishing any of the Work to communicate with the ENGINEER through CONTRACTOR.

6.10. The divisions and sections of the Specifications and the identifications of any Drawings shall not control CONTRACTOR in dividing the Work among Subcontractors or Suppliers or delineating the Work to be performed by any specific trade.

6.11. All Work performed for CONTRACTOR by a Subcontractor or Supplier will be pursuant to an appropriate agreement between CONTRACTOR and the Subcontractor or Supplier which specifically binds the Subcontractor or Supplier to the applicable terms and conditions of the Contract Documents for the benefit of OWNER and ENGINEER. Whenever any such agreement is with a Subcontractor or Supplier who is listed as an additional insured on the property insurance provided in paragraph 5.6 or 5.7, the agreement between the CONTRACTOR and the Subcontractor or Supplier will contain provisions whereby the Subcontractor or Supplier waives all rights against OWNER, CONTRACTOR, ENGINEER, ENGINEER's Consultants and all other additional insureds for all losses and damages caused by, arising out of or resulting from any of the perils covered by such policies and any other property insurance applicable to the Work. If the insurers on any such policies require separate waiver forms to be signed by any Subcontractor or Supplier, CONTRACTOR will obtain the same.

Patent Fees and Royalties:

6.12. CONTRACTOR shall pay all license fees and royalties and assume all costs incident to the use in the performance of the Work or the incorporation in the Work of any invention, design, process, product or device which is the subject of patent rights or copyrights held by others. If a particular invention, design, process, product or device is specified in the Contract Documents for use in the performance of the Work and if to the actual knowledge of OWNER or ENGINEER its use is subject to patent rights or copyrights calling for the payment of any license fee or royalty to others, the existence of such rights shall be disclosed by OWNER in the Contract Documents. To the fullest extent permitted by Laws and Regulations, CONTRACTOR shall indemnify and hold harmless OWNER, ENGINEER, ENGINEER's Consultants and the officers, directors, employees, agents and other consultants of each and any of them from and against all claims, costs, losses and damages arising out of or resulting from any infringement of patent rights or copyrights incident to the use in the performance of the Work or resulting from the incorporation in the Work of any invention, design, process, product or device not specified in the Contract Documents.

Permits:

6.13. Unless otherwise provided in the Supplementary Conditions, CONTRACTOR shall obtain and pay for all construction permits and licenses. OWNER shall assist CONTRACTOR, when necessary, in obtaining such permits and licenses. CONTRACTOR shall pay all governmental charges and inspection fees necessary for the prosecution of the Work, which are applicable at the time of opening of Bids, or, if there are no Bids, on the Effective Date of the Agreement. CONTRACTOR shall pay all charges of utility owners for connections to the Work, and OWNER shall pay all charges of such utility owners for capital costs related thereto such as plant investment fees.

Laws and Regulations:

6.14.1. CONTRACTOR shall give all notices and comply with all Laws and Regulations applicable to furnishing and performance of the Work. Except where otherwise expressly required by applicable Laws and Regulations, neither OWNER nor ENGINEER shall be responsible for monitoring CONTRACTOR's compliance with any Laws or Regulations.

6.14.2. If CONTRACTOR performs any Work knowing or having reason to know that it is contrary to Laws or Regulations, CONTRACTOR shall bear all claims, costs, losses and damages caused by, arising out of or resulting therefrom; however, it shall not be CONTRACTOR's primary responsibility to make certain that the Specifications and Drawings are in accordance with Laws and Regulations, but this shall not relieve CONTRACTOR of CONTRACTOR's obligations under paragraph 3.3.2.

Taxes:

6.15. CONTRACTOR shall pay all sales, consumer, use and other similar taxes required to be paid by CONTRACTOR in accordance with the Laws and Regulations of the place of

responsibilities shall be the prevention of accidents and the maintaining and supervising of safety precautions and programs.

Hazard Communication Programs:

6.22. CONTRACTOR shall be responsible for coordinating any exchange of material safety data sheets or other hazard communication information required to be made available to or exchanged between or among employers at the site in accordance with Laws or Regulations.

Emergencies:

6.23. In emergencies affecting the safety or protection of persons or the Work or property at the site or adjacent thereto, CONTRACTOR, without special instruction or authorization from OWNER or ENGINEER, is obligated to act to prevent threatened damage, injury or loss. CONTRACTOR shall give ENGINEER prompt written notice if CONTRACTOR believes that any significant changes in the Work or variations from the Contract Documents have been caused thereby. If ENGINEER determines that a change in the Contract Documents is required because of the action taken by CONTRACTOR in response to such an emergency, a Work Change Directive or Change Order will be issued to document the consequences of such action.

6.24. *Shop Drawings and Samples:*

6.24.1. CONTRACTOR shall submit Shop Drawings to ENGINEER for review and approval in accordance with the accepted schedule of Shop Drawings and Sample submittals (see paragraph 2.9). All submittals will be identified as ENGINEER may require and in the number of copies specified in the General Requirements. The data shown on the Shop Drawings will be complete with respect to quantities, dimensions, specified performance and design criteria, materials and similar data to show ENGINEER the materials and equipment CONTRACTOR proposes to provide and to enable ENGINEER to review the information for the limited purposes required by paragraph 6.26.

6.24.2. CONTRACTOR shall also submit Samples to ENGINEER for review and approval in accordance with said accepted schedule of Shop Drawings and Sample submittals. Each Sample will be identified clearly as to material, Supplier, pertinent data such as catalog numbers and the use for which intended and otherwise as ENGINEER may require to enable ENGINEER to review the submittal for the limited purposes required by paragraph 6.26. The numbers of each Sample to be submitted will be as specified in the Specifications.

6.25. *Submittal Procedures:*

6.25.1. Before submitting each Shop Drawing or Sample, CONTRACTOR shall have determined and verified:

6.25.1.1. all field measurements, quantities, dimensions, specified performance criteria, installation requirements, materials, catalog numbers and similar information with respect thereto,

6.25.1.2. all materials with respect to intended use, fabrication, shipping, handling, storage, assembly and installation pertaining to the performance of the Work, and

6.25.1.2. all information relative to CONTRACTOR's sole responsibilities in respect of means, methods, techniques, sequences and procedures of construction and safety precautions and programs incident thereto.

CONTRACTOR shall also have reviewed and coordinated each Shop Drawing or Sample with other Shop Drawings and Samples and with the requirements of the Work and the Contract Documents.

6.25.2. Each submittal will bear a stamp or specific written indication that CONTRACTOR has satisfied CONTRACTOR's obligations under the Contact Documents with respect to CONTRACTOR'S review and approval of that submittal.

6.25.3. At the time of each submission, CONTRACTOR shall give ENGINEER specific written notice of such variations, if any, that the Shop Drawing or Sample submitted may have from the requirements of the Contract Documents, such notice to be in a written communication separate from the submittal; and, in addition, shall cause a specific notation to be made on each Shop Drawing and Sample submitted to ENGINEER for review and approval of each such variation.

6.26. ENGINEER will review and approve Shop Drawings and Samples in accordance with the schedule of Shop Drawings and Sample submittals accepted by ENGINEER as required by paragraph 2.9. ENGINEER's review and approval will be only to determine if the items covered by the submittals will, after installation or incorporation in the Work, conform to the information given in the Contract Documents and be compatible with the design concept of the completed Project as a functioning whole as indicated by the Contract Documents. ENGINEER's review and approval will not extend to means, methods, techniques, sequences or procedures of construction (except where a particular means, method, technique, sequence or procedure of construction is specifically and expressly called for by the Contract Documents) or to safety precautions or programs incident thereto. The review and approval of a separate item as such will not indicate approval of the assembly in which the item functions. CONTRACTOR shall make corrections required by ENGINEER, and shall return the required number of corrected copies of Shop Drawings and submit as required new Samples for review and approval. CONTRACTOR shall direct specific attention in writing to revisions other than the corrections called for by ENGINEER on previous submittals.

6.27. ENGINEER's review and approval of Shop Drawings or Samples shall not relieve CONTRACTOR from responsibility for any variation from the requirements of the Contract

the Contract Documents, as well as all continuing obligations indicated in the Contract Documents, will survive final payment, completion and acceptance of the Work and termination or completion of the Agreement.

ARTICLE 7—OTHER WORK

Related Work at Site:

7.1. OWNER may perform other work related to the Project at the site by OWNER's own forces, or let other direct contracts therefor which shall contain General Conditions similar to these, or have other work performed by utility owners. If the fact that such other work is to be performed was not noted in the Contract Documents, then: (i) written notice thereof will be given to CONTRACTOR prior to starting any such other work, and (ii) CONTRACTOR may make a claim therefor as provided in Articles 11 and 12 if CONTRACTOR believes that such performance will involve additional expense to CONTRACTOR or requires additional time and the parties are unable to agree as to the amount or extent thereof.

7.2. CONTRACTOR shall afford each other contractor who is a party to such a direct contract and each utility owner (and OWNER, if OWNER is performing the additional work with OWNER's employees) proper and safe access to the site and a reasonable opportunity for the introduction and storage of materials and equipment and the execution of such other work and shall properly connect and coordinate the Work with theirs. Unless otherwise provided in the Contract Documents, CONTRACTOR shall do all cutting, fitting and patching of the Work that may be required to make its several parts come together properly and integrate with such other work. CONTRACTOR shall not endanger any work of others by cutting, excavating or otherwise altering their work and will only cut or alter their work with the written consent of ENGINEER and the others whose work will be affected. The duties and responsibilities of CONTRACTOR under this paragraph are for the benefit of such utility owners and other contractors to the extent that there are comparable provisions for the benefit of CONTRACTOR in said direct contracts between OWNER and such utility owners and other contractors.

7.3. If the proper execution or results of any part of CONTRACTOR's Work depends upon work performed by others under this Article 7, CONTRACTOR shall inspect such other work and promptly report to ENGINEER in writing any delays, defects or deficiencies in such other work that render it unavailable or unsuitable for the proper execution and results of CONTRACTOR's Work. CONTRACTOR's failure so to report will constitute an acceptance of such other work as fit and proper for integration with CONTRACTOR's Work except for latent or nonapparent defects and deficiencies in such other work.

Coordination:

7.4. If OWNER contracts with others for the performance of other work on the Project at the site, the following will be set forth in Supplementary Conditions:

7.4.1. the person, firm or corporation who will have authority and responsibility for coordination of the activities among the various prime contractors will be identified;

7.4.2. the specific matters to be covered by such authority and responsibility will be itemized; and

7.4.3. the extent of such authority and responsibilities will be provided.

Unless otherwise provided in the Supplementary Conditions, OWNER shall have sole authority and responsibility in respect of such coordination.

ARTICLE 8—OWNER'S RESPONSIBILITIES

8.1. Except as otherwise provided in these General Conditions, OWNER shall issue all communications to CONTRACTOR through ENGINEER.

8.2. In case of termination of the employment of ENGINEER, OWNER shall appoint an engineer against whom CONTRACTOR makes no reasonable objection, whose status under the Contract Documents shall be that of the former ENGINEER.

8.3. OWNER shall furnish the data required of OWNER under the Contract Documents promptly and shall make payments to CONTRACTOR promptly when they are due as provided in paragraphs 14.4 and 14.13.

8.4. OWNER's duties in respect of providing lands and easements and providing engineering surveys to establish reference points are set forth in paragraphs 4.1 and 4.4. Paragraph 4.2 refers to OWNER's identifying and making available to CONTRACTOR copies of reports of explorations and tests of subsurface conditions at the site and drawings of physical conditions in existing structures at or contiguous to the site that have been utilized by ENGINEER in preparing the Contract Documents.

8.5. OWNER's responsibilities in respect of purchasing and maintaining liability and property insurance are set forth in paragraphs 5.5 through 5.10.

8.6. OWNER is obligated to execute Change Orders as indicated in paragraph 10.4.

8.7. OWNER's responsibility in respect of certain inspections, tests and approvals is set forth in paragraph 13.4.

8.8. In connection with OWNER's right to stop Work or suspend Work, see paragraphs 13.10 and 15.1. Paragraph 15.2 deals with OWNER's right to terminate services of CONTRACTOR under certain circumstances.

that ENGINEER believes will not produce a completed Project that conforms to the Contract Documents or that will prejudice the integrity of the design concept of the completed Project as a functioning whole as indicated by the Contract Documents. ENGINEER will also have authority to require special inspection or testing of the Work as provided in paragraph 13.9, whether or not the Work is fabricated, installed or completed.

Shop Drawings, Change Orders and Payments:

9.7. In connection with ENGINEER's authority as to Shop Drawings and Samples, see paragraphs 6.24 through 6.28 inclusive.

9.8. In connection with ENGINEER's authority as to Change Orders, see Articles 10, 11, and 12.

9.9. In connection with ENGINEER's authority as to Applications for Payment, see Article 14.

Determinations for Unit Prices:

9.10. ENGINEER will determine the actual quantities and classifications of Unit Price Work performed by CONTRACTOR. ENGINEER will review with CONTRACTOR the ENGINEER's preliminary determinations on such matters before rendering a written decision thereon (by recommendation of an Application for Payment or otherwise). ENGINEER's written decision thereon will be final and binding upon OWNER and CONTRACTOR, unless, within ten days after the date of any such decision, either OWNER or CONTRACTOR delivers to the other and to ENGINEER written notice of intention to appeal from ENGINEER's decision and: (i) an appeal from ENGINEER's decision is taken within the time limits and in accordance with the procedures set forth in Exhibit GC-A, "Dispute Resolution Agreement," entered into between OWNER and CONTRACTOR pursuant to Article 16, or (ii) if no such Dispute Resolution Agreement has been entered into, a formal proceeding is instituted by the appealing party in a forum of competent jurisdiction to exercise such rights or remedies as the appealing party may have with respect to ENGINEER's decision, unless otherwise agreed in writing by OWNER and CONTRACTOR. Such appeal will not be subject to the procedures of paragraph 9.11.

Decisions on Disputes:

9.11. ENGINEER will be the initial interpreter of the requirements of the Contract Documents and judge of the acceptability of the Work thereunder. Claims, disputes and other matters relating to the acceptability of the Work or the interpretation of the requirements of the Contract Documents pertaining to the performance and furnishing of the Work and Claims under Articles 11 and 12 in respect of changes in the Contract Price or Contract Times will be referred initially to ENGINEER in writing with a request for a formal decision in accordance with this paragraph. Written notice of each such claim, dispute or other matter will be delivered by the claimant to ENGINEER and the other party to the Agreement promptly (but in no event later than thirty days) after the start of the occurrence or event giving rise thereto, and written supporting data will be submitted to ENGINEER and the other party within sixty days after the start of such occurrence or event unless ENGINEER allows an additional period of time for the submission of additional or more accurate data in support of such claim, dispute or other matter. The opposing party shall submit any response to ENGINEER and the claimant within thirty days after receipt of the claimant's last submittal (unless ENGINEER allows additional time). ENGINEER will render a formal decision in writing within thirty days after receipt of the opposing party's submittal, if any, in accordance with this paragraph. ENGINEER's written decision on such claim, dispute or other matter will be final and binding upon OWNER and CONTRACTOR unless: (i) an appeal from ENGINEER's decision is taken within the time limits and in accordance with the procedures set forth in EXHIBIT GC-A, "Dispute Resolution Agreement," entered into between OWNER and CONTRACTOR pursuant to Article 16, or (ii) if no such Dispute Resolution Agreement has been entered into, a written notice of intention to appeal from ENGINEER's written decision is delivered by OWNER or CONTRACTOR to the other and to ENGINEER within thirty days after the date of such decision and a formal proceeding is instituted by the appealing party in a forum of competent jurisdiction to exercise such rights or remedies as the appealing party may have with respect to such claim, dispute or other matter in accordance with applicable Laws and Regulations within sixty days of the date of such decision, unless otherwise agreed in writing by OWNER and CONTRACTOR.

9.12. When functioning as interpreter and judge under paragraphs 9.10 and 9.11, ENGINEER will not show partiality to OWNER or CONTRACTOR and will not be liable in connection with any interpretation or decision rendered in good faith in such capacity. The rendering of a decision by ENGINEER pursuant to paragraphs 9.10 or 9.11 with respect to any such claim, dispute or other matter (except any which have been waived by the making or acceptance of final payment as provided in paragraph 14.16) will be a condition precedent to any exercise by OWNER or CONTRACTOR of such rights or remedies as either may otherwise have under the Contract Documents or by Laws or Regulations in respect of any such claim, dispute or other matter pursuant to Article 16.

9.13. ***Limitations on ENGINEER's Authority and Responsibilities:***

9.13.1. Neither ENGINEER's authority or responsibility under this Article 9 or under any other provision of the Contract Documents nor any decision made by ENGINEER in good faith either to exercise or not exercise such authority or responsibility or the undertaking, exercise or performance of any authority or responsibility by ENGINEER shall create, impose or give rise to any duty owed by ENGINEER to CONTRACTOR, any Subcontractor, any Supplier, any other person or organization, or to any surety for or employee or agent of any of them.

be valid if not submitted in accordance with this paragraph 11.2.

11.3. The value of any Work covered by a Change Order or of any claim for an adjustment in the Contract Price will be determined as follows:

11.3.1. where the Work involved is covered by unit prices contained in the Contract Documents, by application of such unit prices to the quantities of the items involved (subject to the provisions of paragraphs 11.9.1 through 11.9.3, inclusive);

11.3.2. where the Work involved is not covered by unit prices contained in the Contract Documents, by a mutually agreed lump sum (which may include an allowance for overhead and profit not necessarily in accordance with paragraph 11.6.2);

11.3.3. where the Work involved is not covered by unit prices contained in the Contract Documents and agreement to a lump sum is not reached under paragraph 11.3.2, on the basis of the Cost of the Work (determined as provided in paragraphs 11.4 and 11.5) plus a CONTRACTOR's fee for overhead and profit (determined as provided in paragraph 11.6).

Cost of the Work:

11.4. The term Cost of the Work means the sum of all costs necessarily incurred and paid by CONTRACTOR in the proper performance of the Work. Except as otherwise may be agreed to in writing by OWNER, such costs shall be in amounts no higher than those prevailing in the locality of the Project, shall include only the following items and shall not include any of the costs itemized in paragraph 11.5:

11.4.1. Payroll costs for employees in the direct employ of CONTRACTOR in the performance of the Work under schedules of job classifications agreed upon by OWNER and CONTRACTOR. Such employees shall include without limitation superintendents, foremen and other personnel employed full- time at the site. Payroll costs for employees not employed full time on the Work shall be apportioned on the basis of their time spent on the Work. Payroll costs shall include, but not be limited to, salaries and wages plus the cost of fringe benefits which shall include social security contributions, unemployment, excise and payroll taxes, workers' compensation, health and retirement benefits, bonuses, sick leave, vacation and holiday pay applicable thereto. The expenses of performing Work after regular working hours, on Saturday, Sunday or legal holidays, shall be included in the above to the extent authorized by OWNER.

11.4.2. Cost of all materials and equipment furnished and incorporated in the Work, including costs of transportation and storage thereof, and Suppliers' field services required in connection therewith. All cash discounts shall accrue to CONTRACTOR unless OWNER deposits funds with CONTRACTOR with which to make payments, in which case the cash discounts shall accrue to OWNER. All trade discounts, rebates and refunds and returns from sale of surplus materials and equipment shall accrue to OWNER, and CONTRACTOR shall make provisions so that they may be obtained.

11.4.3. Payments made by CONTRACTOR to the Subcontractors for Work performed or furnished by Subcontractors. If required by OWNER, CONTRACTOR shall obtain competitive bids from subcontractors acceptable to OWNER and CONTRACTOR and shall deliver such bids to OWNER who will then determine, with the advice of ENGINEER, which bids, if any, will be accepted. If any subcontract provides that the Subcontractor is to be paid on the basis of Cost of the Work Plus a fee, the Subcontractor's Cost of the Work and fee shall be determined in the same manner as CONTRACTOR's Cost of the Work and fee as provided in paragraphs 11.4, 11.5, 11.6 and 11.7. All subcontracts shall be subject to the other provisions of the Contract Documents insofar as applicable.

11.4.4. Costs of special consultants (including but not limited to engineers, architects, testing laboratories, surveyors, attorneys and accountants) employed for services specifically related to the Work.

11.4.5. Supplemental costs including the following:

11.4.5.1. The proportion of necessary transportation, travel and subsistence expenses of CONTRACTOR's employees incurred in discharge of duties connected with the Work.

11.4.5.2. Cost, including transportation and maintenance, of all materials, supplies, equipment, machinery, appliances, office and temporary facilities at the site and hand tools not owned by the workers, which are consumed in the performance of the Work, and cost less market value of such items used but not consumed which remain the property of CONTRACTOR.

11.4.5.3. Rentals of all construction equipment and machinery and the parts thereof whether rented from CONTRACTOR or others in accordance with rental agreements approved by OWNER with the advice of ENGINEER, and the costs of transportation, loading, unloading, installation, dismantling and removal thereof—all in accordance with the terms of said rental agreements. The rental of any such equipment, machinery or parts shall cease when the use thereof is no longer necessary for the Work.

11.4.5.4. Sales, consumer, use or similar taxes related to the Work, and for which CONTRACTOR is liable, imposed by Laws and Regulations.

11.4.5.5. Deposits lost for causes other than negligence of CONTRACTOR, any Subcontractor or anyone directly or indirectly employed by any of them or for whose acts any of them may be liable, and royalty payments and fees for permits and licenses.

Cash Allowances:

11.8. It is understood that CONTRACTOR has included in the Contract Price all allowances so named in the Contract Documents and shall cause the Work so covered to be furnished and performed for such sums as may be acceptable to OWNER and ENGINEER. CONTRACTOR agrees that:

11.8.1. the allowances include the cost to CONTRACTOR (less any applicable trade discounts) of materials and equipment required by the allowances to be delivered at the site, and all applicable taxes; and

11.8.2. CONTRACTOR's costs for unloading and handling on the site, labor, installation costs, overhead, profit and other expenses contemplated for the allowances have been included in the Contract Price and not in the allowances and no demand for additional payment on account of any of the foregoing will be valid.

Prior to final payment, an appropriate Change Order will be issued as recommended by ENGINEER to reflect actual amounts due CONTRACTOR on account of Work covered by allowances, and the Contract Price shall be correspondingly adjusted.

11.9. *Unit Price Work:*

11.9.1. Where the Contract Documents provide that all or part of the Work is to be Unit Price Work, initially the Contract Price will be deemed to include for all Unit Price Work an amount equal to the sum of the established unit price for each separately identified item of Unit Price Work times the estimated quantity of each item as indicated in the Agreement. The estimated quantities of items of Unit Price Work are not guaranteed and are solely for the purpose of comparison of Bids and determining an initial Contract Price. Determinations of the actual quantities and classifications of Unit Price Work performed by CONTRACTOR will be made by ENGINEER in accordance with paragraph 9.10.

11.9.2. Each unit price will be deemed to include an amount considered by CONTRACTOR to be adequate to cover CONTRACTOR's overhead and profit for each separately identified item.

11.9.3. OWNER or CONTRACTOR may make a claim for an adjustment in the Contract Price in accordance with Article 11 if:

11.9.3.1. the quantity of any item of Unit Price Work performed by CONTRACTOR differs materially and significantly from the estimated quantity of such item indicated in the Agreement; and

11.9.3.2. there is no corresponding adjustment with respect to any other item of Work; and

11.9.3.3. if CONTRACTOR believes that CONTRACTOR is entitled to an increase in Contract Price as a result of having incurred additional expense or OWNER believes that OWNER is entitled to a decrease in Contract Price and the parties are unable to agree as to the amount of any such increase or decrease.

ARTICLE 12—CHANGE OF CONTRACT TIMES

12.1. The Contract Times (or Milestones) may only be changed by a Change Order or a Written Amendment. Any claim for an adjustment of the Contract Times (or Milestones) shall be based on written notice delivered by the party making the claim to the other party and to ENGINEER promptly (but in no event later than thirty days) after the occurrence of the event giving rise to the claim and stating the general nature of the claim. Notice of the extent of the claim with supporting data shall be delivered within sixty days after such occurrence (unless ENGINEER allows an additional period of time to ascertain more accurate data in support of the claim) and shall be accompanied by the claimant's written statement that the adjustment claimed is the entire adjustment to which the claimant has reason to believe it is entitled as a result of the occurrence of said event. All claims for adjustment in the Contract Times (or Milestones) shall be determined by ENGINEER in accordance with paragraph 9.11 if OWNER and CONTRACTOR cannot otherwise agree. No claim for an adjustment in the Contract Times (or Milestones) will be valid if not submitted in accordance with the requirements of this paragraph 12.1.

12.2. All time limits stated in the Contract Documents are of the essence of the Agreement.

12.3. Where CONTRACTOR is prevented from completing any part of the Work within the Contract Times (or Milestones) due to delay beyond the control of CONTRACTOR, the Contract Times (or Milestones) will be extended in an amount equal to the time lost due to such delay if a claim is made therefor as provided in paragraph 12.1. Delays beyond the control of CONTRACTOR shall include, but not be limited to, acts or neglect by OWNER, acts or neglect of utility owners or other contractors performing other work as contemplated by Article 7, fires, floods, epidemics, abnormal weather conditions or acts of God. Delays attributable to and within the control of a Subcontractor or Supplier shall be deemed to be delays within the control of CONTRACTOR.

12.4. Where CONTRACTOR is prevented from completing any part of the Work within the Contract Times (or Milestones) due to delay beyond the control of both OWNER and CONTRACTOR, an extension of the Contract Times (or Milestones) in an amount equal to the time lost due to such delay shall be CONTRACTOR's sole and exclusive remedy for such delay. In no event shall OWNER be liable to CONTRACTOR, any Subcontractor, any Supplier, any other person or organization, or to any surety for or employee or agent of any of them, for damages arising out of or resulting from (i) delays caused by or within the control of CONTRACTOR, or (ii)

shall not give rise to any duty on the part of OWNER to exercise this right for the benefit of CONTRACTOR or any surety or other party.

Correction or Removal of Defective Work:

13.11. If required by ENGINEER, CONTRACTOR shall promptly, as directed, either correct all *defective* Work, whether or not fabricated, installed or completed, or, if the Work has been rejected by ENGINEER, remove it from the site and replace it with Work that is not *defective*. CONTRACTOR shall pay all claims, costs, losses and damages caused by or resulting from such correction or removal (including but not limited to all costs of repair or replacement of work of others).

13.12. *Correction Period:*

13.12.1. If within one year after the date of Substantial Completion or such longer period of time as may be prescribed by Laws or Regulations or by the terms of any applicable special guarantee required by the Contract Documents or by any specific provision of the Contract Documents, any Work is found to be *defective*, CONTRACTOR shall promptly, without cost to OWNER and in accordance with OWNER's written instructions: (i) correct such *defective* Work, or, if it has been rejected by OWNER, remove it from the site and replace it with Work that is not *defective*, and (ii) satisfactorily correct or remove and replace any damage to other Work or the work of others resulting therefrom. If CONTRACTOR does not promptly comply with the terms of such instructions, or in an emergency where delay would cause serious risk of loss or damage, OWNER may have the *defective* Work corrected or the rejected Work removed and replaced, and all claims, costs, losses and damages caused by or resulting from such removal and replacement (including but not limited to all costs of repair or replacement of work of others) will be paid by CONTRACTOR.

13.12.2. In special circumstances where a particular item of equipment is placed in continuous service before Substantial Completion of all the Work, the correction period for that item may start to run from an earlier date if so provided in the Specifications or by Written Amendment.

13.12.3. Where *defective* Work (and damage to other Work resulting therefrom) has been corrected, removed or replaced under this paragraph 13.12, the correction period hereunder with respect to such Work will be extended for an additional period of one year after such correction or removal and replacement has been satisfactorily completed.

Acceptance of Defective Work:

13.13. If, instead of requiring correction or removal and replacement of *defective* Work, OWNER (and, prior to ENGINEER's recommendation of final payment, also ENGINEER) prefers to accept it, OWNER may do so. CONTRACTOR shall pay all claims, costs, losses and damages attributable to OWNER's evaluation of and determination to accept such *defective* Work (such costs to be approved by ENGINEER as to reasonableness). If any such acceptance occurs prior to ENGINEER's recommendation of final payment, a Change Order will be issued incorporating the necessary revisions in the Contract Documents with respect to the Work; and OWNER shall be entitled to an appropriate decrease in the Contract Price, and, if the parties are unable to agree as to the amount thereof, OWNER may make a claim therefor as provided in Article 11. If the acceptance occurs after such recommendation, an appropriate amount will be paid by CONTRACTOR to OWNER.

OWNER May Correct Defective Work:

13.14. If CONTRACTOR fails within a reasonable time after written notice from ENGINEER to correct *defective* Work or to remove and replace rejected Work as required by ENGINEER in accordance with paragraph 13.11, or if CONTRACTOR fails to perform the Work in accordance with the Contract Documents, or if CONTRACTOR fails to comply with any other provision of the Contract Documents, OWNER may, after seven days' written notice to CONTRACTOR, correct and remedy any such deficiency. In exercising the rights and remedies under this paragraph OWNER shall proceed expeditiously. In connection with such corrective and remedial action, OWNER may exclude CONTRACTOR from all or part of the site, take possession of all or part of the Work, and suspend CONTRACTOR's services related thereto, take possession of CONTRACTOR's tools, appliances, construction equipment and machinery at the site and incorporate in the Work all materials and equipment stored at the site or for which OWNER has paid CONTRACTOR but which are stored elsewhere. CONTRACTOR shall allow OWNER, OWNER's representatives, agents and employees, OWNER's other contractors and ENGINEER and ENGINEER's Consultants access to the site to enable OWNER to exercise the rights and remedies under this paragraph. All claims, costs, losses and damages incurred or sustained by OWNER in exercising such rights and remedies will be charged against CONTRACTOR and a Change Order will be issued incorporating the necessary revisions in the Contract Documents with respect to the Work; and OWNER shall be entitled to an appropriate decrease in the Contract Price, and, if the parties are unable to agree as to the amount thereof, OWNER may make a claim therefor as provided in Article 11. Such claims, costs, losses and damages will include but not be limited to all costs of repair or replacement of work of others destroyed or damaged by correction, removal or replacement of CONTRACTOR's *defective* Work. CONTRACTOR shall not be allowed an extension of the Contract Times (or Milestones) because of any delay in the performance of the Work attributable to the exercise by OWNER of OWNER's rights and remedies hereunder.

ARTICLE 14—PAYMENTS TO CONTRACTOR AND COMPLETION

Schedule of Values:

14.1. The schedule of values established as provided in paragraph 2.9 will serve as the basis for progress payments and

14.7.6. Liens have been filed in connection with the Work, except where CONTRACTOR has delivered a specific Bond satisfactory to OWNER to secure the satisfaction and discharge of such Liens,

14.7.7. there are other items entitling OWNER to a set-off against the amount recommended, or

14.7.8. OWNER has actual knowledge of the occurrence of any of the events enumerated in paragraphs 14.7.1 through 14.7.3 or paragraphs 15.2.1 through 15.2.4 inclusive;

but OWNER must give CONTRACTOR immediate written notice (with a copy to ENGINEER) stating the reasons for such action and promptly pay CONTRACTOR the amount so withheld, or any adjustment thereto agreed to by OWNER and CONTRACTOR, when CONTRACTOR corrects to OWNER's satisfaction the reasons for such action.

Substantial Completion:

14.8. When CONTRACTOR considers the entire Work ready for its intended use CONTRACTOR shall notify OWNER and ENGINEER in writing that the entire Work is substantially complete (except for items specifically listed by CONTRACTOR as incomplete) and request that ENGINEER issue a certificate of Substantial Completion. Within a reasonable time thereafter, OWNER, CONTRACTOR and ENGINEER shall make an inspection of the Work to determine the status of completion. If ENGINEER does not consider the Work substantially complete, ENGINEER will notify CONTRACTOR in writing giving the reasons therefor. If ENGINEER considers the Work substantially complete, ENGINEER will prepare and deliver to OWNER a tentative certificate of Substantial Completion which shall fix the date of Substantial Completion. There shall be attached to the certificate a tentative list of items to be completed or corrected before final payment. OWNER shall have seven days after receipt of the tentative certificate during which to make written objection to ENGINEER as to any provisions of the certificate or attached list. If, after considering such objections, ENGINEER concludes that the Work is not substantially complete, ENGINEER will within fourteen days after submission of the tentative certificate to OWNER notify CONTRACTOR in writing, stating the reasons therefor. If, after consideration of OWNER's objections, ENGINEER considers the Work substantially complete, ENGINEER will within said fourteen days execute and deliver to OWNER and CONTRACTOR a definitive certificate of Substantial Completion (with a revised tentative list of items to be completed or corrected) reflecting such changes from the tentative certificate as ENGINEER believes justified after consideration of any objections from OWNER. At the time of delivery of the tentative certificate of Substantial Completion ENGINEER will deliver to OWNER and CONTRACTOR a written recommendation as to division of responsibilities pending final payment between OWNER and CONTRACTOR with respect to security, operation, safety, maintenance, heat, utilities, insurance and warranties and guarantees. Unless OWNER and CONTRACTOR agree otherwise in writing and so inform ENGINEER in writing prior to ENGINEER's issuing the definitive certificate of Substantial Completion, ENGINEER's aforesaid recommendation will be binding on OWNER and CONTRACTOR until final payment.

14.9. OWNER shall have the right to exclude CONTRACTOR from the Work after the date of Substantial Completion, but OWNER shall allow CONTRACTOR reasonable access to complete or correct items on the tentative list.

Partial Utilization:

14.10. Use by OWNER at OWNER's option of any substantially completed part of the Work which: (i) has specifically been identified in the Contract Documents, or (ii) OWNER, ENGINEER and CONTRACTOR agree constitutes a separately functioning and usable part of the Work that can be used by OWNER for its intended purpose without significant interference with CONTRACTOR's performance of the remainder of the Work, may be accomplished prior to Substantial Completion of all the Work subject to the following:

14.10.1. OWNER at any time may request CONTRACTOR in writing to permit OWNER to use any such part of the Work which OWNER believes to be ready for its intended use and substantially complete. If CONTRACTOR agrees that such part of the Work is substantially complete, CONTRACTOR will certify to OWNER and ENGINEER that such part of the Work is substantially complete and request ENGINEER to issue a certificate of Substantial Completion for that part of the Work. CONTRACTOR at any time may notify OWNER and ENGINEER in writing that CONTRACTOR considers any such part of the Work ready for its intended use and substantially complete and request ENGINEER to issue a certificate of Substantial Completion for that part of the Work. Within a reasonable time after either such request, OWNER, CONTRACTOR and ENGINEER shall make an inspection of that part of the Work to determine its status of completion. If ENGINEER does not consider that part of the Work to be substantially complete, ENGINEER will notify OWNER and CONTRACTOR in writing giving the reasons therefor. If ENGINEER considers that part of the Work to be substantially complete, the provisions of paragraphs 14.8 and 14.9 will apply with respect to certification of Substantial Completion of that part of the Work and the division of responsibility in respect thereof and access thereto.

14.10.2. No occupancy or separate operation of part of the Work will be accomplished prior to compliance with the requirements of paragraph 5.15 in respect of property insurance.

Final Inspection:

14.11. Upon written notice from CONTRACTOR that the entire Work or an agreed portion thereof is complete, ENGINEER will make a final inspection with OWNER and CONTRACTOR and will notify CONTRACTOR in writing of all

15.2.1. if CONTRACTOR persistently fails to perform the Work in accordance with the Contract Documents (including, but not limited to, failure to supply sufficient skilled workers or suitable materials or equipment or failure to adhere to the progress schedule established under paragraph 2.9 as adjusted from time to time pursuant to paragraph 6.6);

15.2.2. if CONTRACTOR disregards Laws or Regulations of any public body having jurisdiction;

15.2.2. if CONTRACTOR disregards the authority of ENGINEER; or

15.2.4. if CONTRACTOR otherwise violates in any substantial way any provisions of the Contract Documents;

OWNER may, after giving CONTRACTOR (and the surety, if any,) seven days' written notice and to the extent permitted by Laws and Regulations, terminate the services of CONTRACTOR, exclude CONTRACTOR from the site and take possession of the Work and of all CONTRACTOR's tools, appliances, construction equipment and machinery at the site and use the same to the full extent they could be used by CONTRACTOR (without liability to CONTRACTOR for trespass or conversion), incorporate in the Work all materials and equipment stored at the site or for which OWNER has paid CONTRACTOR but which are stored elsewhere, and finish the Work as OWNER may deem expedient. In such case CONTRACTOR shall not be entitled to receive any further payment until the Work is finished. If the unpaid balance of the Contract Price exceeds all claims, costs, losses and damages sustained by OWNER arising out of or resulting from completing the Work such excess will be paid to CONTRACTOR. If such claims, costs, losses and damages exceed such unpaid balance, CONTRACTOR shall pay the difference to OWNER. Such claims, costs, losses and damages incurred by OWNER will be reviewed by ENGINEER as to their reasonableness and when so approved by ENGINEER incorporated in a Change Order, provided that when exercising any rights or remedies under this paragraph OWNER shall not be required to obtain the lowest price for the Work performed.

15.3. Where CONTRACTOR's services have been so terminated by OWNER, the termination will not affect any rights or remedies of OWNER against CONTRACTOR then existing or which may thereafter accrue. Any retention or payment of moneys due CONTRACTOR by OWNER will not release CONTRACTOR from liability.

15.4. Upon seven days' written notice to CONTRACTOR and ENGINEER, OWNER may, without cause and without prejudice to any other right or remedy of OWNER, elect to terminate the Agreement. In such case, CONTRACTOR shall be paid (without duplication of any items):

15.4.1. for completed and acceptable Work executed in accordance with the Contract Documents prior to the effective date of termination, including fair and reasonable sums for overhead and profit on such Work;

15.4.2. for expenses sustained prior to the effective date of termination in performing services and furnishing labor, materials or equipment as required by the Contract Documents in connection with uncompleted Work, plus fair and reasonable sums for overhead and profit on such expenses;

15.4.3. for all claims, costs, losses and damages incurred in settlement of terminated contracts with Subcontractors, Suppliers and others; and

15.4.4. for reasonable expenses directly attributable to termination.

CONTRACTOR shall not be paid on account of loss of anticipated profits or revenue or other economic loss arising out of or resulting from such termination.

CONTRACTOR May Stop Work or Terminate:

15.5. If, through no act or fault of CONTRACTOR, the Work is suspended for a period of more than ninety days by OWNER or under an order of court or other public authority, or ENGINEER fails to act on any Application for Payment within thirty days after it is submitted or OWNER fails for thirty days to pay CONTRACTOR any sum finally determined to be due, then CONTRACTOR may, upon seven days' written notice to OWNER and ENGINEER, and provided OWNER or ENGINEER do not remedy such suspension or failure within that time, terminate the Agreement and recover from OWNER payment on the same terms as provided in paragraph 15.4. In lieu of terminating the Agreement and without prejudice to any other right or remedy, if ENGINEER has failed to act on an Application for Payment within thirty days after it is submitted, or OWNER has failed for thirty days to pay CONTRACTOR any sum finally determined to be due, CONTRACTOR may upon seven day's written notice to OWNER and ENGINEER stop the Work until payment of all such amounts due CONTRACTOR, including interest thereon. The provisions of this paragraph 15.5 are not intended to preclude CONTRACTOR from making claim under Articles 11 and 12 for an increase in Contract Price or Contract Times or otherwise for expenses or damage directly attributable to CONTRACTOR's stopping Work as permitted by this paragraph.

ARTICLE 16—DISPUTE RESOLUTION

If and to the extent that OWNER and CONTRACTOR have agreed on the method and procedure for resolving disputes between them that may arise under this Agreement, such dispute resolution method and procedure, if any, shall be as set forth in Exhibit GC-A, "Dispute Resolution Agreement," to be attached hereto and made a part hereof. If no such agreement on the method and procedure for resolving such disputes has been reached, and subject to the provisions of paragraphs 9.10, 9.11, and 9.12, OWNER and CONTRACTOR may exercise

EXHIBIT GC-A to General Conditions of the Agreement Between OWNER and CONTRACTOR Dated_____
For use with EJCDC No. 1910-8 (1990 ed.)

DISPUTE RESOLUTION AGREEMENT

OWNER and CONTRACTOR hereby agree that Article 16 of the General Conditions to the Agreement between OWNER and CONTRACTOR is amended to include the following agreement of the parties:

16.1. All claims, disputes and other matters in question between OWNER and CONTRACTOR arising out of or relating to the Contract Documents or the breach thereof (except for claims which have been waived by the making or acceptance of final payment as provided by paragraph 14.15) will be decided by arbitration in accordance with the Construction Industry Arbitration Rules of the American Arbitration Association then obtaining, subject to the limitations of this Article 16. This agreement so to arbitrate and any other agreement or consent to arbitrate entered into in accordance herewith as provided in this Article 16 will be specifically enforceable under the prevailing law of any court having jurisdiction.

16.2. No demand for arbitration of any claim, dispute or other matter that is required to be referred to ENGINEER initially for decision in accordance with paragraph 9.11 will be made until the earlier of (a) the date on which ENGINEER has rendered a written decision or (b) the thirty-first day after the parties have presented their evidence to ENGINEER if a written decision has not been rendered by ENGINEER before that date. No demand for arbitration of any such claim, dispute or other matter will be made later than thirty days after the date on which ENGINEER has rendered a written decision in respect thereof in accordance with paragraph 9.11; and the failure to demand arbitration within said thirty days' period will result in ENGINEER's decision being final and binding upon OWNER and CONTRACTOR. If ENGINEER renders a decision after arbitration proceedings have been initiated, such decision may be entered as evidence but will not supersede the arbitration proceedings, except where the decision is acceptable to the parties concerned. No demand for arbitration of any written decision of ENGINEER rendered in accordance with paragraph 9.10 will be made later than ten days after the party making such demand has delivered written notice of intention to appeal as provided in paragraph 9.10.

16.3. Notice of the demand for arbitration will be filed in writing with the other party to the Agreement and with the American Arbitration Association, and a copy will be sent to ENGINEER for information. The demand for arbitration will be made within the thirty-day or ten- day period specified in paragraph 16.2 as applicable, and in all other cases within a reasonable time after the claim, dispute or other matter in question has arisen, and in no event shall any such demand be made after the date when institution of legal or equitable proceedings based on such claim, dispute or other matter in question would be barred by the applicable statute of limitations.

16.4. Except as provided in paragraph 16.5 below, no arbitration arising out of or relating to the Contract Documents shall include by consolidation, joinder or in any other manner any other person or entity (including ENGINEER, ENGINEER's Consultant and the officers, directors, agents, employees or consultants of any of them) who is not a party to this contract unless:

16.4.1. the inclusion of such other person or entity is necessary if complete relief is to be afforded among those who are already parties to the arbitration, and

16.4.2. such other person or entity is substantially involved in a question of law or fact which is common to those who are already parties to the arbitration and which will arise in such proceedings, and

16.4.3. the written consent of the other person or entity sought to be included and of OWNER and CONTRACTOR has been obtained for such inclusion, which consent shall make specific reference to this paragraph; but no such consent shall constitute consent to arbitration of any dispute not specifically described in such consent or to arbitration with any party not specifically identified in such consent.

16.5. Notwithstanding paragraph 16.4 if a claim, dispute or other matter in question between OWNER and CONTRACTOR involves the Work of a Subcontractor, either OWNER or CONTRACTOR may join such Subcontractor as a party to the arbitration between OWNER and CONTRACTOR hereunder. CONTRACTOR shall include in all subcontracts required by paragraph 6.11 a specific provision whereby the Subcontractor consents to being joined in an arbitration between OWNER and CONTRACTOR involving the Work of such Subcontractor. Nothing in this paragraph 16.5 nor in the provision of such subcontract consenting to joinder shall create any claim, right or cause of action in favor of Subcontractor and against OWNER, ENGINEER or ENGINEER's Consultants that does not otherwise exist.

16.6. The award rendered by the arbitrators will be final, judgment may be entered upon it in any court having jurisdiction thereof, and it will not be subject to modification or appeal.

[The remainder of this page was left blank intentionally.]

[This page was left blank intentionally.]

SECTION 00800

SUPPLEMENTARY CONDITIONS

ARTICLE	TITLE	PAGE NO.
	GENERAL	3
SC-1	DEFINITIONS	3
SC-2.2	COPIES OF DOCUMENTS	3
SC-2.6.3	BEFORE STARTING CONSTRUCTION	3
SC-5.1	PAYMENT AND PERFORMANCE BONDS	4
SC-5.3	CONTRACTOR'S INSURANCE	4
SC-5.5	OWNER'S LIABILITY INSURANCE	5
SC-5.6	PROPERTY INSURANCE	5
SC-5.11.1	WAIVER OF RIGHTS	6
SC-5.12	RECEIPT AND APPLICATION OF PROCEEDS	6
SC-5.14	ACCEPTANCE OF INSURANCE	6
SC-5.15	PARTIAL UTILIZATION - PROPERTY INSURANCE	6
SC-5.16	INDEMNITY	6
SC-6.1	SUPERVISION AND SUPERINTENDENCE	6
SC-6.2	SUPERVISION AND SUPERINTENDENCE	7
SC-6.3.1	LABOR MATERIALS AND EQUIPMENT	7
SC-6.3.2	LABOR MATERIALS AND EQUIPMENT	7
SC-6.4.1	LABOR MATERIALS AND EQUIPMENT	7
SC-6.8.1	CONCERNING SUBCONTRACTORS, SUPPLIERS AND OTHERS	7
SC-6.9.1	CONCERNING SUBCONTRACTORS, SUPPLIERS AND OTHERS	8
SC-6.14.1	LAWS AND REGULATIONS	8
SC-6.24.2	SHOP DRAWINGS AND SAMPLES	8
SC-6.25.3	SUBMITTAL PROCEDURES	8
SC-6.26	SUBMITTAL PROCEDURES	8
SC-6.27	SUBMITTAL PROCEDURE	9
SC-6.28	SHOP DRAWINGS AND SAMPLES	9
SC-7.1	RELATED WORK AT SITE	9
SC-8.5	OWNER'S RESPONSIBILITIES	9
SC-9.3	RESIDENT PROJECT REPRESENTATIVE	9
SC-9.4	CLARIFICATIONS AND INTERPRETATIONS	9
SC-9.5	AUTHORIZED VARIATIONS IN WORK	9
SC-9.10	DETERMINATION FOR UNIT PRICES	10
SC-9.11	DECISIONS ON DISPUTES	10
SC-9.12	DECISIONS ON DISPUTES	10
SC-9.13	LIMITATIONS OF ENGINEER'S RESPONSIBILITIES	10
SC-10.2	CHANGES IN THE WORK	10
SC-10.4.3	CHANGES IN THE WORK	10
SC-11.2	CHANGE OF CONTRACT PRICE	10
SC-11.8.3	CASH ALLOWANCES	10
SC-11.9.2	UNIT PRICE WORK	11
SC-11.9.3	UNIT PRICE WORK	11

SUPPLEMENTARY CONDITIONS (CONT'D)

ARTICLE	TITLE	PAGE NO.
SC-12.1	CHANGE OF CONTRACT TIME	11
SC-12.3	CONTRACT TIME	12
SC-13.4	TESTS	12
SC-14.1	SCHEDULE OF VALUES	16
SC-14.2.1	PAYMENT FOR STORED MATERIALS	16
SC-14.4	REVIEW OF APPLICATION FOR PROGRESS PAYMENT	16
SC-14.8	SUBSTANTIAL COMPLETION	16
SC-14.13	FINAL PAYMENT AND ACCEPTANCE	16
SC-15.2	OWNER MAY TERMINATE	16
SC-15.4	OWNER MAY TERMINATE	17
SC-16	ARBITRATION	17
SC-17	MISCELLANEOUS	17
SC-18	AFFIDAVIT BY GENERAL CONTRACTOR	17
SC-21	ADMINISTRATION OF THE CONTRACT	17
SC-22	PROJECT SIGNS	17

ATTACHMENTS

	AFFIDAVIT	18
	GUARANTEE	19
	CONTRACTOR'S CERTIFICATION	20
	CONTRACTOR'S APPLICATION FOR PAYMENT	21

SECTION 00800

SUPPLEMENTARY CONDITIONS

GENERAL

These Supplementary Conditions amend or supplement the Standard General Conditions of the Construction Contract and other provisions of the Contract Documents, as indicated below. All provisions which are not so amended or supplemented remain in full force and effect. In the event the Standard General Conditions of the Construction Contract conflict with the Supplementary Conditions, the Supplementary Conditions prevail.

All pronouns or adjectives (e.g., he, she, his, her) used in these Contract Documents, Invitation to Bid, Instructions to Bidders, and Proposal shall be considered as neutral references, and not in reference to a specific sex.

SC-1 DEFINITIONS

Add or amend the Definitions in the Standard General Conditions to these documents as follows:

ENGINEER

Add the following:

Wherever in these documents the work "ENGINEER" appears, it shall be understood to mean the OWNER's contractors and their authorized representatives, acting either directly or indirectly as authorized agents of the OWNER.

OWNER

Add the following:

Wherever in these documents the work "OWNER" appears, it shall be understood to mean Pasco County Board of County Commissioners, whose address is 7530 Little Road, New Port Richey, Florida 34654.

SC-2.2 COPIES OF DOCUMENTS

Amend the first sentence of Paragraph 2.2 of the General Conditions to read as follows: Change "ten copies" to "five copies".

SC-2.6.3 BEFORE STARTING CONSTRUCTION

Add to Paragraph 2.6.3 of the General Conditions the following:

An "Application for Payment" form is provided at the end of this Section.

SC-5.1 PAYMENT AND PERFORMANCE BONDS

Add the following:

CONTRACTOR's obligation to provide - CONTRACTOR shall provide OWNER with a payment and a performing bond in the amount of the contract price. Said bonds shall be substantially the same form as in Sections 00610 and 00620. Additionally, bonds must meet the following specifications:

A. The Surety Company shall have a currently valid Certificate of Authority, issued by the State of Florida Department of Insurance, authorizing it to write surety bonds in the State of Florida.

B. The Surety Company shall have a currently valid Certificate of Authority issued by the United States Department of Treasury under Sections 9304 to 9308 of Title 31 of the United States Code.

C. The Surety Company shall be in full compliance with the provisions of the Florida Insurance code.

D. The Surety Company shall have at least twice the minimum surplus and capital required by the Florida Insurance Code at the time the invitation to bid is issued.

E. If the contract award amount exceeds $500,000.00, the Surety Company shall also comply with the following provision:

The Surety Company shall have at least the following rating in the latest issue of Best's Key Rating Guide:

CONTRACT AMOUNT	POLICYHOLDER'S RATING	REQUIRED FINANCIAL RATING
$ 500,000 to $ 1,000,000	A	Class IV
$ 1,000,000 to $ 2,500,000	A	Class V
$ 2,500,000 to $ 5,000,000	A	Class VI
$ 5,000,000 to $10,000,000	A	Class VII
$10,000,000 to $25,000,000	A	Class VIII
$25,000,000 to $50,000,000	A	Class IX
$50,000,000 to $75,000,000	A	Class X

F. If the Contract award amount does not exceed $500,000.00, the Surety Company will be required to comply with the minimum requirements set forth in Section 287.0935, Florida Statutes.

SC-5.3 CONTRACTOR'S INSURANCE

The CONTRACTOR shall not commence work until he has obtained all the insurance required by this section nor shall the CONTRACTOR allow any Subcontractor to commence work until proper insurance has been obtained by the Subcontractor. All such insurance must be approved by the OWNER.

The CONTRACTOR and all Subcontractors shall take out, and maintain during the life of this Contract, Workers' compensation for all of his employees employed at the project site. In case any employee is engaged in hazardous work on the site who is not protected under the Workers' Compensation statute, the CONTRACTOR or Subcontractor for whom the employee works shall provide for adequate coverage to protect these employees.

The CONTRACTOR shall take out and maintain during the life of the Contract such Public Liability and Property Damage Insurance as will protect him, any Subcontractor he employs, and the OWNER and ENGINEER from all claims for damage for personal injury, including accidental death, as well as claims for property damage. Coverage shall also be provided for contractual liability and completed operations. The amount of this insurance shall be as follows:

1. Comprehensive General Liability: $500,000 each person bodily injury, $1,000,000 each occurrence bodily injury, $250,000 each person property damage, $500,000 each occurrence property damage.

2. Comprehensive Automobile Liability: $500,000 each person bodily injury, $1,000,000 each occurrence bodily injury, $250,000 each person property damage, $500,000 each occurrence property damage.

3a. Contractual Liability:

$500,000/$1,000,000 bodily injury, $250,000/$500,000 property damage limits.

3b. Broad Form Property Damage:

$500,000/$1,000,000 bodily injury, $250,000/$500,000 property damage limits.

3c. OWNER's and CONTRACTOR's Protective:

$500,000/$1,000,000 bodily injury, $250,000/$500,000 property damage limits.

3d. Products and Completed Operations:

$500,000/$1,000,000 bodily injury, $250,000/$500,000 property damage limits.

The CONTRACTOR shall provide the OWNER satisfactory proof of the required insurance prior to any construction, in the form of a "Certificate of Insurance", listing the OWNER as additional insured. Certificates of Insurance shall provide that the insurance company agrees that, if the policy be canceled or materially changed by the company during its term, thirty (30) days' written notice prior thereto will be given to the OWNER. The Certificate shall be issued on Pasco County's standard form available from the Purchasing Department or the ENGINEER.

Insurance required under this section must be written by an insurer authorized to do business in the State of Florida, and also have an "A" policyholder's rating and a financial rating of at least Class XI in accordance with the most current Best's rating.

In addition to the Certificate of Insurance required herein, the CONTRACTOR shall provide the OWNER with copies of all policies required herein. All policies required hereunder, with the exception of Workers Compensation, shall name Pasco County as additional insured.

SC-5.5 OWNER'S LIABILITY INSURANCE

Delete Paragraph 5.5 of the General Conditions in its entirety.

SC-5.6 PROPERTY INSURANCE

Delete Paragraphs 5.6, 5.7, 5.8, 5.9, and 5.10 of the General Conditions in their entirety.

SC-5.11.1 WAIVER OF RIGHTS

Delete Paragraphs 5.11.1 and 5.11.2 of the General Conditions in their entirety.

SC-5.12 RECEIPT AND APPLICATION OF PROCEEDS

Delete Paragraphs 5.12 and 5.13 of the General Conditions in their entirety.

SC-5.14 ACCEPTANCE OF INSURANCE

Delete Paragraph 5.14 of the General Conditions in its entirety.

SC-5.15 PARTIAL UTILIZATION - PROPERTY INSURANCE

Delete Paragraph 5.15 of the General Conditions in its entirety.

SC-5.16 INDEMNITY

In consideration of One Hundred and 00/100 Dollars ($100.00), the sufficiency and receipt of which is hereby acknowledged by CONTRACTOR to be included and paid for in the contract price, and to the fullest extent permitted by law, CONTRACTOR shall indemnify, defend, and hold harmless the OWNER and all of its agents and employees, from any claim, loss, damage, cost, charge, or expense, including attorney's fees and costs, arising out of any act, action, neglect, or omission during the performance of the contract or work performed thereunder, whether direct or indirect, and whether or not due to or caused by negligence of the OWNER or any of its officers, agents, or employees, except that CONTRACTOR will not be liable under this provision for damages arising out of the injury or damage to persons or property directly caused or resulting from the sole negligence of the OWNER or any of its agents or employees.

CONTRACTOR's obligation to defend and indemnify shall not be excused because of CONTRACTOR's inability to evaluate liability or because CONTRACTOR evaluates liability and determines CONTRACTOR is not liable or determine the OWNER is solely negligent. Only a final adjudication or judgment finding the OWNER solely negligent shall excuse performance of this provision by CONTRACTOR. If a judgment finding the OWNER solely negligent is appealed and the finding of sole negligence is reversed, CONTRACTOR will be obligated to indemnify the OWNER for the cost of appeal(s). CONTRACTOR shall pay all costs and fees related to this obligation and its enforcement by the OWNER.

This provision shall also pertain to any claims brought against the OWNER by any employee of CONTRACTOR, subcontractor, or anyone directly or indirectly employed by any of them.

CONTRACTOR's obligation under this provision shall not be limited in any way to the agreed upon contract price as shown in this agreement or CONTRACTOR's limit of or lack of sufficient insurance protection.

SC-6.1 SUPERVISION AND SUPERINTENDENCE

Amend the first section of Paragraph 6.1 of the General Conditions starting in Line 7 by striking out "..., but CONTRACTOR shall not be responsible for the negligence of others in the design or selection of a specific means, methods, technique, sequence or procedure of construction which is indicated in and required by the Contract Documents".

SC-6.2 SUPERVISION AND SUPERINTENDENCE

Amend the first sentence of Paragraph 6.2 of the General Conditions by adding "and the job site" after "on the Work...".

SC-6.3.1 LABOR MATERIALS AND EQUIPMENT

Add a new Paragraph immediately after Paragraph 6.3 of the General Conditions which is to read as follows:

6.3.1 Regular working hours are defined as up to 8 hours per day, Monday through Friday, beginning no earlier than 7:00 A.M. and ending no later than 7:00 P.M., excluding holidays. Whenever the CONTRACTOR is performing any part of the work with the exception of equipment maintenance and cleanup, OWNER's representation and/or inspection will be required. Requests to work other than regular working hours must be submitted in writing to the ENGINEER, at least 48 hours prior to any proposed weekend work or scheduled extended work weeks, to give the OWNER ample time to arrange for representation and/or inspection during those periods. Periodic unscheduled overtime on weekdays will be permitted provided that two hours notice is provided to the ENGINEER. Maintenance and cleanup may be performed during hours other than regular working hours.

SC-6.3.2 LABOR MATERIALS AND EQUIPMENT

Add a new paragraph immediately after paragraph 6.3.1 of the General Conditions which is to read as follows:

6.3.2 CONTRACTOR shall reimburse the OWNER for additional engineering and/or inspection costs incurred as a result of overtime work in excess of the regular working hours stipulated in Article SC-6.3.1. At OWNER's option, overtime costs may either be deducted from the CONTRACTOR's monthly payment request or deducted from the CONTRACTOR's retention prior to release of final payment. Overtime costs for the OWNER's personnel shall be based on the individual's current overtime wage rate. Overtime costs for personnel employed by the ENGINEER or OWNER's independent testing laboratory shall be calculated in accordance with the terms of their respective contracts with the OWNER.

SC-6.4.1 LABOR MATERIALS AND EQUIPMENT

Add a new paragraph immediately after paragraph 6.4 of the General Conditions which is to read as follows:

6.4.1 All potable water for testing, flushing and construction shall be furnished by the CONTRACTOR. It may be available by connecting to the OWNER's water system at a point approved by the OWNER. The OWNER shall charge the CONTRACTOR for water used in performing the above functions in accordance with the OWNER's established rate schedule. There shall be installed in each and every connection to the OWNER's water supply a backflow preventer meeting the requirements of ANSI A40.6, latest revision at each and every connection. CONTRACTOR shall be required to meter all water used.

SC-6.8.1 CONCERNING SUBCONTRACTORS, SUPPLIERS AND OTHERS

Add the following:

The CONTRACTOR shall perform on the site and with his own organization, labor equivalent to at least 50 percent of the total amount of the work to be performed under this Contract. If, during the progress of the work hereunder, the

CONTRACTOR requests a reduction of such percentage, and the OWNER determines that it would be to the OWNER's advantage, the percentage may be reduced; PROVIDED prior written approval of such reduction is obtained by the CONTRACTOR from the OWNER.

SC-6.9.1 CONCERNING SUBCONTRACTORS, SUPPLIERS AND OTHERS

Add the following to Paragraph 6.9 of the General Conditions:

"OWNER or ENGINEER may furnish to any such Subcontractor, Supplier, or other person or organization, to the extent practicable, evidence of amounts paid to CONTRACTOR in accordance with CONTRACTOR's Applications for Payment."

SC-6.14.1 LAWS AND REGULATIONS

Amend Paragraph 6.14.1 of the General Conditions to include the following:

CONTRACTOR agrees to comply with all applicable Federal, State, and Local Laws, Regulations, and Ordinances including but not limited to the following:

1. Title VI of the 1984 Civil Rights Act and related regulations.

2. Title VII of the 1964 Civil Rights Act as amended by the Equal Employment Opportunity Act which prohibits discrimination in employment.

3. Age Discrimination Act of 1973.

4. Contract work Hours and Safety Standards Act.

5. Section 504 of the Rehabilitation Act prohibiting discrimination in the employment of the handicapped.

6. Fair Labor Standards Act.

7. Chapter 112, Florida Statutes prohibiting conflicts of interest in the procurement of contracts with a governmental agency.

SC-6.24.2 SHOP DRAWINGS AND SAMPLES

Amend the first sentence of Paragraph 6.24.2 of the General Conditions by striking out the following words: "and approval".

SC-6.25.3 SUBMITTAL PROCEDURES

Amend Paragraph 6.25.3 of the General Conditions by striking out the following words: "and approval".

SC-6.26 SUBMITTAL PROCEDURES

Amend Paragraph 6.26 of the General Conditions by:

Striking out "and approval" within this section.

SC-6.27 SUBMITTAL PROCEDURE

Amend Paragraph 6.27 of the General Conditions by striking out "and approval".

SC-6.28 SHOP DRAWINGS AND SAMPLES

Amend Paragraph 6.28 of the General Conditions by striking out "and approval".

SC-7.1 RELATED WORK AT SITE

Amend Paragraph 7.1 of the General Conditions by striking out "and (ii) Contractor....".

SC-8.5 OWNER'S RESPONSIBILITIES

Delete Paragraph 8.5 of the General Conditions in its entirety.

SC-9.3 RESIDENT PROJECT REPRESENTATIVE

Delete Paragraph 9.3 of the General Conditions in its entirety and insert the following in its place:

OWNER will furnish a Resident Project Representative to assist in observing the performance of the work. The duties, responsibilities and limitations of authority of this Resident Project Representative and assistants are set forth in the attached pages to these Supplemental Conditions.

SC-9.4 CLARIFICATIONS AND INTERPRETATIONS

Amend Paragraph 9.4 of the General Conditions by addition of the following:

Apparent inconsistencies between two or more sections of the Contract documents shall be reported to the ENGINEER immediately, for resolution. Where possible, precedence shall be given in the following order:

1. Contract
2. Supplementary Conditions
3. Instructions to Bidders
4. General Conditions
5. Specifications
6. Drawings
   a. Detail Drawings
   b. General Drawings
   c. Figure Dimensions
   d. Scale Dimensions

SC-9.5 AUTHORIZED VARIATIONS IN WORK

Delete Section 9.5 of the General Conditions in its entirety.

SC-9.10 DETERMINATION FOR UNIT PRICES

Amend Paragraph 9.10 of the General Conditions in its entirety and insert the following in its place:

9.10 ENGINEER will have authority to determine the actual quantities and classifications of items of Unit Price Work performed by CONTRACTOR, and the written decisions of ENGINEER on such matters will be final, binding on OWNER and CONTRACTOR and not subject to appeal (except as modified by ENGINEER to reflect changed factual conditions).

SC-9.11 DECISIONS ON DISPUTES

Amend Section 9.11 of the General Conditions by striking out the first two sentences "ENGINEER will be ..., which ENGINEER will render in writing within a reasonable time."

SC-9.12 DECISIONS ON DISPUTES

Delete Paragraph 9.12 of the General Conditions in its entirety.

SC-9.13 LIMITATIONS OF ENGINEER'S RESPONSIBILITIES

Delete Paragraph 9.13 of the General Conditions in its entirety.

SC-10.2 CHANGES IN THE WORK

Delete Paragraph 10.2 of the General Conditions in its entirety.

SC-10.4.3 CHANGES IN THE WORK

Delete Paragraph 10.4.3 of the General Conditions in its entirety.

SC-11.2 CHANGE OF CONTRACT PRICE

Amend Paragraph 11.2 of the General Conditions by striking the last two sentences "All claims for adjustment ..., in accordance with this Paragraph 11.2".

SC-11.8.3 CASH ALLOWANCES

Add a new paragraph immediately after Paragraph 11.8.2 of the General Conditions which is to read as follows:

11.8.3 The CONTRACTOR shall not proceed on any additional work to be covered by allowances until authorized in writing by the ENGINEER.

SC-11.9.2 UNIT PRICE WORK

11.9.2 Amend 11.9.2 by adding the following:

However, the estimated quantities listed under "Est. Qty." of the proposal are estimates as indicated. For purposes of compensation for photo scale error, field realignment and other variables that may affect total quantities installed, the quantities may be overestimated. The CONTRACTOR is responsible for field verifying the actual needed quantities for determining his overhead and profit and for material ordering.

SC-11.9.3 UNIT PRICE WORK

11.9.3.4 Add the following new paragraph:

If the actual installed quantities vary by more than twenty-five (25) percent over the estimated quantity, the OWNER reserves the right to negotiate a revised, reduced unit cost for that amount of work which exceeds twenty-five (25) percent over the estimated quantity. The revised unit cost will be established in a Change Order.

SC-12.1 CHANGE OF CONTRACT TIME

Delete Paragraph 12.1 of the General Conditions and insert the following Paragraphs as 12.1 and 12.1.1:

12.1 CLAIMS FOR TIME EXTENSION/NO DAMAGES FOR TIME DELAY

Claims for an increase in the Contract Time will be made by presenting a Request for Delay (RFD) form to the ENGINEER within seven (7) days of the occurrence giving rise to the claim. All claims for an increase in the contract time are waived if not so presented. RFD forms will be supplied to the CONTRACTOR by the OWNER or the ENGINEER.

The sole and exclusive manner of increasing the Contract Time due to some occurrence giving rise to the presentation of a RFD form is by Change Order. Timely presentation of a RFD form is a prerequisite to obtaining a Change Order. The Change Order shall address any and all claims based on said occurrence. With respect thereto, the CONTRACTOR agrees that its exclusive remedy for delays in the performance of the Contract caused by events beyond its control, including delays claimed to be caused by the OWNER or ENGINEER or attributable to the OWNER or ENGINEER and including claims based on breach of contract or negligence, shall be an extension of the Contract time. CONTRACTOR hereby waives any and all other claims based on said occurrence which are not addressed by the Change Order. Nothing contained herein will prevent the parties from increasing the Contract time by mutual agreement.

12.1.1 The OWNER's liability to CONTRACTOR for any claims other than claims for extension of the Contract time, as described herein, arising out of or related to the subject matter of this Contract, whether in contract or tort, including, but not limited to, claims for payment by the OWNER of the costs, damages or losses because of changed conditions under which the work is to be performed, or for additional work, shall be governed by the following provisions: 1) all claims must be submitted as a Request for Change Order in the manner as provided herein; 2) the CONTRACTOR must submit a Notice of claim to OWNER and to the ENGINEER within twenty (20) days of when the CONTRACTOR was or should have been aware of the occurrence of the event giving rise to the claim; (the presentation of a timely RFD form, as described in 12.1 above, will constitute the Notice of Claim for an extension of this Contract time with all other provisions of this Paragraph applying accordingly)

and 3) within twenty (20) days of submitting its Notice of Claim, the CONTRACTOR shall submit to the OWNER its Request for Change Order, which shall include a written statement of details of the claim, including a description of the work affected.

The CONTRACTOR agrees that the OWNER shall not be liable for any claim that the CONTRACTOR fails to submit as a Request for Change Order, or as a timely presented RFD form, as provided in these Paragraphs.

After receipt of a Request for Change Order, the OWNER, in consultation with the ENGINEER, shall deliver to the CONTRACTOR within thirty (30) days, after receipt of request, its written determination of the claim.

The CONTRACTOR's exclusive remedy for delays in performance of the construction caused by events beyond its control, including delays claimed to be caused by or attributable to the OWNER or the ENGINEER, including claims based on breach of contract or negligence, shall be a claim, or a RFD form, submitted in compliance with the above and preceding Paragraphs. The CONTRACTOR expressly agrees that the forgoing constitutes its sole and exclusive remedies for delays and changes in such work and eliminates any other remedies for claim for increase in the Contract price, delays, changes in the work, damages, losses, or additional compensation.

SC-12.3 CONTRACT TIME

Amend Paragraph 12.3 of the General Conditions by adding the following to Sentence 1 ". . . and 12.1.1 as set forth in the Supplementary Conditions."

SC-13.4 TESTS

The OWNER shall specify the testing laboratory to be used and will pay for initial tests. Any retesting which must be done as a result of failure will be paid for by the CONTRACTOR.

STATE OF FLORIDA:
SS
COUNTY OF PASCO:

FINAL RELEASE OF LIEN

KNOW ALL MEN BY THESE PRESENTS, that _____ _____ for and in consideration of the sum of _____ Dollars ($_____) paid to _ _____ by _____ receipt of which is hereby acknowledged do(es) hereby release and quit-claim to _____ _____ rights, claims, or demands of any kind whatsoever which _____ _____ now has (have) or might have against the property, building, and/or improvements, on account of labor performed, material furnished, and/or for any incidental expense for the construction of _____ _____ _____ thereon or in otherwise improving said property situated as above-described.

WITNESSES:

_____ SIGNED: _____

_____ TITLE: _____

SWORN AND SUBSCRIBED TO BEFORE ME this ____ day of _____, 19__.

_____

Notary Public

State of Florida at Large
My Commission Expires _____

Recommended by _____ Date _____
Engineer

Accepted by _____ Date _____
Contractor

Authorized by _____ Date _____
Pasco County Board of County Commissioners

Approved as to form _____ Date _____
Pasco County Attorney

_____ Date _____
Pasco County Clerk of the Circuit Court

CONTRACT CHANGE ORDER

CHANGE ORDER NO. _____

Project: _____
Project No.: _____ Bid No.: _____ Contract Date: _____
Contractor: _____

Condition: The change described herein shall be governed by the terms and conditions of the contract, and shall not in any way alter the terms of the contract, but shall hereinafter be a part of the contract.

The following changes are hereby made to the Contract Documents: _____
_____

Justification: _____

CHANGE TO CONTRACT PRICE
Original Contract Price: $_____

Current Contract Price (as adjusted by previous Change Orders): $_____

The Contract Price due to this Change Order will be: $_____

CHANGE TO CONTRACT TIME
Previous time of completion: _____ calendar days.

Previous completion date: _____

The Contract Time by this Change Order will be: (increased) (decreased) by _____ calendar days. The new date for completion of all work under the Contract will be _____.

Approvals Required: To be effective, this Change Order must be approved by Pasco County if it changes the scope or price of the project.

SC-14.1 SCHEDULE OF VALUES

Amend Paragraph 14.1 of the General Conditions by inserting "by proposal" in the first sentence between "established" and "as" to read "The schedule of values established by proposal as provided ...".

SC-14.2.1 PAYMENT FOR STORE MATERIALS

14.2.1 Add the following new paragraph:

If the CONTRACTOR has provided, and the OWNER has accepted, a Performance Bond as part of the Contract, then evidence of payment for stored materials (i.e., Bill of Sale, canceled check, etc.) will not be required, unless requested by OWNER, until Application for Final Payment is submitted.

SC-14.4 REVIEW OF APPLICATION FOR PROGRESS PAYMENT

Amend Paragraph 14.4 of the General Conditions by changing the first word in the last sentence from "Ten" to "Thirty".

SC-14.8 SUBSTANTIAL COMPLETION

Amend Paragraph 14.8 of the General Conditions by striking out the sixth sentence "OWNER shall have seven ... or attached list." and the last sentence "Unless OWNER and ... CONTRACTOR until final payment."

SC-14.13 FINAL PAYMENT AND ACCEPTANCE

Amend Paragraph 14.13 of the General Conditions by inserting " ... and Certification of Completion when required ..." in the first sentence to read as follows: "... work during construction and final inspection and Certification of Completion when required, and ENGINEER's review of the final ..."

SC-15.2 OWNER MAY TERMINATE

Amend Paragraph 15.2 of the General Conditions by adding the following:

15.2.5 If a CONTRACTOR commences a voluntary case under any chapter of the Bankruptcy Code (Title 11, United States Code), as now or hereafter in effect, or if CONTRACTOR takes any equivalent or similar action by filling a petition or otherwise under any other federal or state law in effect at such time relating to the bankruptcy or insolvency;

15.2.6 If a petition is filed against CONTRACTOR under any chapter of the Bankruptcy Code, as now or hereafter in effect at the time of filing, or if a petition is filed seeking any such equivalent or similar relief against CONTRACTOR under any other federal or state law in effect at the time relating to bankruptcy or insolvency;

15.2.7 If CONTRACTOR makes a general assignment for the benefit of creditors;

15.2.8 If a trustee, receiver, custodian or agent of CONTRACTOR is appointed under applicable law or under contract, whose appointment or authority to take charge of property of CONTRACTOR is for the purpose of enforcing a Lien against such property or for the purpose of general administration of such property for the benefit of CONTRACTOR's creditors;

15.2.9 If CONTRACTOR admits, in writing, an inability to pay its debts generally as they become due;

15.2.10 The OWNER may terminate this agreement at any time without cause upon 30 days notice to the CONTRACTOR.

SC-15.4 OWNER MAY TERMINATE

Amend Paragraph 15.4 by deleting the following from the second sentence " ... plus reasonable termination expense ... and arbitration costs).", and add the following sentences to Paragraph 15.4:

"In no way shall expenses exceed total cost of compensation as prorated to the date of termination specified by this agreement, as may be amended from time to time. Further it is specifically agreed that termination cost shall not include lost anticipated profits of any kind."

SC-16 ARBITRATION

Delete "Article 16 - ARBITRATION" of the General Conditions in its entirety, as well as any reference to "arbitration" in the General Conditions.

SC-17 MISCELLANEOUS

Add Paragraph 17.6, "Discovery of Latent Defects or Fraud". As to latent defects and fraud, the applicable statute of limitations shall commence upon the date of discovery or date discovery of the defect should reasonably have occurred.

SC-18 AFFIDAVIT BY GENERAL CONTRACTOR

CONTRACTOR shall complete an affidavit upon completion of construction and submit it along with the final payment request. A form of such affidavit is enclosed in these Supplemental Conditions.

SC-21 ADMINISTRATION OF THE CONTRACT

The provisions of the General Conditions 00700 dealing with authority of the ENGINEER to act, including, but limited to, Article 9 - ENGINEER's Status During Construction are amended to the extent that all decisions of the ENGINEER must be decided and directed jointly by the OWNER and ENGINEER.

SC-22 PROJECT SIGNS

Project signs shall be provided in number and configuration as indicated in Section 01000.

SUPPLEMENTARY CONDITIONS

AFFIDAVIT

STATE OF FLORIDA:
SS
COUNTY OF PASCO:

Before me, the undersigned authority, authorized to administer oaths and take acknowledgments, personally appeared _____ who, after being first duly sworn, upon oath deposes and says that all lienors contracting directly with or directly employed by (him, them, it) and that all taxes imposed by Chapter 212, Florida Statutes (Sales and Use Tax Act) as amended, have been paid and discharged, and that all bills, wages, fees, claims, and other charges incurred by _____
_____
_____
_____ in connection with the construction of _____
_____ have been paid in full, except as noted below.

WITNESSES:

_____ SIGNED: _____

_____ BY: _____

SWORN AND SUBSCRIBED TO BEFORE ME this ____ day of _____, 19__.

_____

Notary Public

State of Florida at Large
My Commission Expires _____

GUARANTEE

The Undersigned _____ hereby guarantees all work performed in accordance with terms of the contract dated _____ between _____ _____ and _____ for work consisting of __ _____ against defects due to faulty workmanship or materials for a period of three hundred sixty-five (365) days from date hereof. During the period of the guarantee, the contractor agrees to make all repairs necessitated by reason of faulty workmanship or materials at no cost to the owner; subject to the following additional conditions:

A) This guarantee is in addition to factory warranties covering certain equipment where applicable under contract.

B) Nothing herein contained shall serve to modify or limit the obligations of the contractor to faithfully fulfill and complete its obligations under the contract.

C) Specifically excluded from this guarantee is maintenance of equipment or repair of any damage caused by normal wear and tear, fire, windstorm, or other casualties.

D) Special Conditions: _____
_____
_____

WITNESSES:

_____ SIGNED: _____

_____ TITLE: _____

SWORN AND SUBSCRIBED TO BEFORE ME this _____ day of _____, 19__.

_____

Notary Public

State of Florida at Large
My Commission Expires _____

CONTRACTOR'S CERTIFICATION

As authorized agent for the CONTRACTOR, I the undersigned hereby certify that this is a true and correct statement of work performed and materials delivered under this application for payment, and there are no vendor's liens, mechanics' liens, or other liens or rights to liens against this job, and that all received under this contract have been applied to discharge in full all of the CONTRACTOR's obligations reflected in prior applications for payment, and that hourly wages paid to employees on this project for the period of this application are in accordance with the requirements of the contract documents.

Submitted For Payment:
CONTRACTOR

By: _____

Date: _____

Recommended For Payment:
LAW ENGINEERING AND ENVIRONMENTAL SERVICES, INC.

By: _____

Date: _____

Approved For Payment:
PASCO COUNTY

By: _____

Date: _____

CONTRACTOR'S APPLICATION FOR PAYMENT

DESCRIPTION: Expansion of Citizens Drop Off Area	
OWNER: Pasco County	**ENGINEER:** Law Eng. & Env. Services, Inc.
CONTRACTOR:	**PHONE #:**
CONTRACT #:	**REQUEST DATE:**
PAYMENT #:	**ACCT. #:**
CONTRACT DATA	
BIDS RECEIVED:	
CONTRACT DATE:	
NOTICE TO PROCEED:	
CALENDAR DAYS TO COMPLETE:	
ORIGINAL COMPLETION DATE:	
DAYS EXT. ALLOWED TO DATE:	
NEW COMPLETION DATE:	
ORIGINAL CONTRACT AMOUNT:	
ADJUSTMENTS TO DATE:	
REVISED CONTRACT AMOUNT:	
PERCENTAGE COMPLETE ($):	
PERCENTAGE COMPLETE (TIME):	
PERCENTAGE COMPLETE (ENG.):	
SUMMARY OF PROJECT STATUS	
TOTAL WORK COMPLETED:	
MATERIAL STORE ON SITE:	
TOTAL EARNED TO DATE:	
LESS RETAINAGE:	
BALANCE:	
LESS PREVIOUS PAYMENTS:	
LESS P.R. OVERTIME:	
AMOUNT DUE THIS PERIOD:	
PERCENTAGE OF RETENTION:	