Lena Road Landfill
Waste Tire Processing Facility
Permit Renewal Application

Manatee County
Utilities Department
Solid Waste Division
3333 Lena Road
Bradenton, FL 34211

SCS ENGINEERS

09217088.08 | February 11, 2019

3922 Coconut Palm Drive, Suite 102
Tampa, FL 33619
813-621-0080

Table of Contents

Section Page

1.0 Introduction....2
1.1 Site Information....2
2.0 WTPF Design and Maximum Capacity....2
3.0 Stormwater Design....3
4.0 WTPF Operations....3
5.0 WTPF Operations Equipment....4
6.0 Vector Control....4
7.0 Reporting and Record Keeping....4
8.0 Financial Assurance....4
9.0 Closure Plan....5

Tables

Table 1. Tire Operations Equipment....4

Figures

Figure 1. Existing Site Plan
Figure 2. Flood Plain, Wetlands and Surface Water Body Location Map
Figure 3. Zoning Map
Figure 4. Land Use Map
Figure 5. Non-Potable Wells Map

Appendices

Appendix A WTPF Record Drawing dated September 5, 2008
Appendix B Storage Pad Calculations and Maximum Storage Capacity
Appendix C Emergency Preparedness Manual and Fire Safety Survey
Appendix D WTPF Equipment Specifications
Appendix E Waste Tire Quarterly Progress Reports

1.0 INTRODUCTION

On behalf of the Manatee County Utilities Department, Solid Waste Division (SWD), SCS Engineers, Inc. (SCS) has prepared this Engineering Report (Report) for the permit renewal application of the Waste Tire Processing Facility (WTPF) located at the Manatee County Lena Road Landfill, 3333 Lena Road, Bradenton, Florida (south of State Road 64, 1 mile east of I-75) in Manatee County.

1.1 SITE INFORMATION

The Lena Road WTPF is operated to meet the operation requirements of Rules 62-711.540 and 550 F.A.C. The Lena Road WTPF is located north of the Household Hazardous Waste Facility with an approved footprint of approximately 18,785 square feet, Refer to Figure 1, Existing Site Plan and Appendix A for the WTPF Record Drawing dated September 5, 2008. A maximum storage of 320 tons of waste tires is allowed by the Florida Department of Environmental Protection (FDEP) Permit No. 126654-004-WT-02. The SWD receives approximately 1,900 tons of waste tires at the Lena Road WTPF each year. These waste tires are brought to the site by the public, waste tire collectors, commercial entities, removed by Manatee County landfill spotters from solid waste deposited at the active landfill working face, or collected from illegal dumpsites. The tires are weighed and placed in a waste tire pile at the WTPF. Any unauthorized materials erroneously brought to the Lena Road WTPF are rejected, and directed to the appropriate area for proper solid waste management. The SWD has contracted with a contractor to regularly remove the waste tires from the WTPF as needed. There is no processing of waste tires at the Manatee County WTPF.

2.0 WTPF DESIGN AND MAXIMUM CAPACITY

Waste tires are not processed at the Lena Road WTPF. Waste tires are received, temporarily stored and subsequently removed and transferred to an off-site FDEP-approved processing facility. The WTPF provides for storage of 320 tons of waste tires. Refer to maximum storage capacity calculations provided in Appendix B.

Rule 62-711.530(3) states that at least 75% of the whole tires, used tires, and processed tires that are delivered to or are contained on the site of the waste tire processing facility at the beginning of each calendar year shall be processed and removed for disposal or recycling from the facility during the year or disposed on the site at a permitted solid waste management facility. The SWD will continue to operate and remove 75% of the whole waste tires accepted to the WTPF in each calendar year.

The WTPF Site Plan is shown on Appendix A. The WTPF includes an approved concrete pad footprint of approximately 85-feet by 221-feet (18,785 square feet). The WTPF includes four-foot high concrete side walls along each end of the concrete pad. A 50-foot fire access lane divides the storage area (north-south direction) and provides for ingress and egress at the WTPF. Tire storage piles are located towards each end of the concrete pad. No changes to the perimeter or concrete walls are proposed as part pf this permit renewal application.

Whole tires received at the WTPF are placed on two storage piles each with an approximate dimension of 50-foot by 70-foot (7,000 total square feet). The storage piles are stacked no higher than 15 feet. Each pile can store up to approximately 160 tons of whole tires. Based on pad dimensions and estimated stockpile heights, an estimated total volume of 1,600 cubic yards (cy) or 320 tons of whole tires can be stockpiled at the WTPF. Refer to the tire storage pad calculations

provided in Appendix B and Figure 1, Existing Site Plan. Whole tires are stored in accordance with the storage requirements listed in Rule 62-711.540 F.A.C.

3.0 STORMWATER DESIGN

The WTPF is located within a paved perimeter road that also surrounds the white goods disposal area and access ramp for tires and white goods loading. Stormwater run-off drains to three (3) culverts beneath the perimeter road. Refer to Figure 2, Flood Plain, Wetlands and Surface Water Body Location Map. The majority of the stormwater run-off from the WTPF is directed southwest to an open concrete apron where it is conveyed to the first southern stormwater swale. From the first southern stormwater swale the run-off is then conveyed to the second southern stormwater swale before it finally discharges west and into open area immediately south of the stormwater pond.

Normally the culverts are open. In case of a waste tire pile fire, the three (3) stop gate valves on the culverts will be closed, and the road will act as a berm around the waste tire pile. Run-off from the fire will be trapped in the area between the WTPF and the perimeter road berm, and will be prevented from entering the storm water system. This berm gives the WTPF adequate protection to keep liquid runoff from a waste tire pile fire from entering water bodies. No changes to the stormwater design are proposed as part pf this permit renewal application.

Procedures for managing runoff in the event of a tire fire are provided in the WTPF Emergency Preparedness Manual. Refer to Appendix C for a copy of the Emergency Preparedness Manual and Appendix A for the WTPF Survey Record Drawing.

4.0 WTPF OPERATIONS

Vehicles delivering waste tires to the WTPF enter through the Lena Road Landfill main gate and are weighed at the time of entry and exit from the Landfill to establish the net weight of tires delivered to the WTPF. A sign stating the site operating hours, cost of disposal and site rules is located at the main gate. When the delivery vehicle enters the scale area, pertinent information about the delivery vehicle, including the date, type of vehicle, weight of material to be disposed of, daily transaction number and any other information pertaining to account name or status is recorded. Haulers are then directed to proceed to the WTPF which is marked with proper signs.

The SWD employees are responsible for operating and maintaining the WTPF during all hours of operation. SWD personnel at the WTPF observe the unloading of waste tires and adhere to the storage requirements listed in Rule 62-711.540, F.A.C. The person delivering the tires is instructed to unload the tires and to stack them inside the WTPF.

No other waste materials are accepted at the WTPF. Haulers with other waste are re-directed to the scales to re-weigh the remaining load without the tires and then directed to the appropriate disposal areas for the materials. Any putrescible material inadvertently received at the WTPF is removed and disposed of in the Class I landfill area. Landfill personnel inspect the Waste Tire Processing Facility several times each day restacking or straightening the tires as needed.

The SWD contracts with a private contractor who regularly removes the waste tires from the WTPF as needed to an off-site FDEP-approved processing facility. This may vary from weekly to monthly depending on the number of tires received.

5.0 WTPF OPERATIONS EQUIPMENT

The tire operations equipment used at the WTPF is listed in Table 1. There is no processing of tires at the WTPF. Instead, a wheel loader is used several times a week to compile the tires into the designated piles and assist the SWD contracted waste tire collector during loading for disposal. The wheel loader has the potential to operate 2,080 hours per year (8 hours per day, 5 days per week, and 52 weeks per year). This is a conservative estimate because wheel loader is used based on amount of tires delivered and is not operated continuously during a work week. Refer to Appendix D for a copy of the WTPF equipment specifications.

Table 1. Tire Operations Equipment

Equipment	Make / Model	Operating Schedule (hrs/yr)
Wheel Loader	Caterpillar Model No. 950K	2080

6.0 VECTOR CONTROL

The WTPF does not accept putrescible waste; therefore, there are no current or anticipated rodent problems. The SWD personnel proactively inspects the storage piles daily. In the event rodents appear to be a problem at the WTPF, the SWD or a licensed pest control service will be brought to the site to investigate and address the problem. Mosquitoes are controlled by preventing and removing standing water, removing tires on a first in - first out basis and spraying the pile with insecticides if necessary. Once a year all tires are removed and the concrete pad is washed down.

7.0 REPORTING AND RECORD KEEPING

Operation records, quarterly and annual reports, and annual fire inspection surveys are maintained at the Lena Road Administration Building. In accordance with Rule 62-711.530(4), F.A.C., the SWD compiles and submits quarterly reports to the FDEP. In accordance with Rule 62-711.540, F.A.C., fire safety surveys are conducted at the property annually and submitted to FDEP with the annual reports. Refer to Appendix E for the Waste Tire Quarterly Progress Report Summary Table listing the annual tonnage of tires received and processed at the WTPF.

The Lena Road WTPF Emergency Preparedness Manual is kept in the Lena Road Administration Building /Scale house. The manual is updated at least once a year, and upon changes in operations at the site. Refer to Appendix C for a copy of the Emergency Preparedness Manual and most recent Fire Safety Survey for the WTPF.

8.0 FINANCIAL ASSURANCE

The financial assurance cost estimate submitted to FDEP as part of the Operation Permit Renewal, dated October 27, 2015, and subsequent responses dated December 18, 2015, prepared by Atkins North America, Inc., included the closure and long-term care costs for the Lena Road Class I Landfill including the WTPF. The approved 2018 inflation factor financial assurance cost estimate, dated February 26, 2018, prepared by SCS remains valid. Per previous clarification by FDEP staff on January 2019, a financial assurance recalculated estimate is not required at the time of this submittal. No changes are proposed to financial assurance requirements as part of this WTPF permit renewal application.

9.0 CLOSURE PLAN

Closure of the WTPF will include stopping public access to the site. Notices to the public will be posted indicating the site is closed and providing the phone number of the SWD. The FDEP will be notified and upon determination of public access, a 10-week period will be implemented for processing of waste tires and site rehabilitation.

Site rehabilitation will consist of removal and disposal of all processed tires on site. Facility residuals and equipment will be removed and the site cleaned as necessary. The FDEP will be notified when the site closing and rehabilitation is complete.

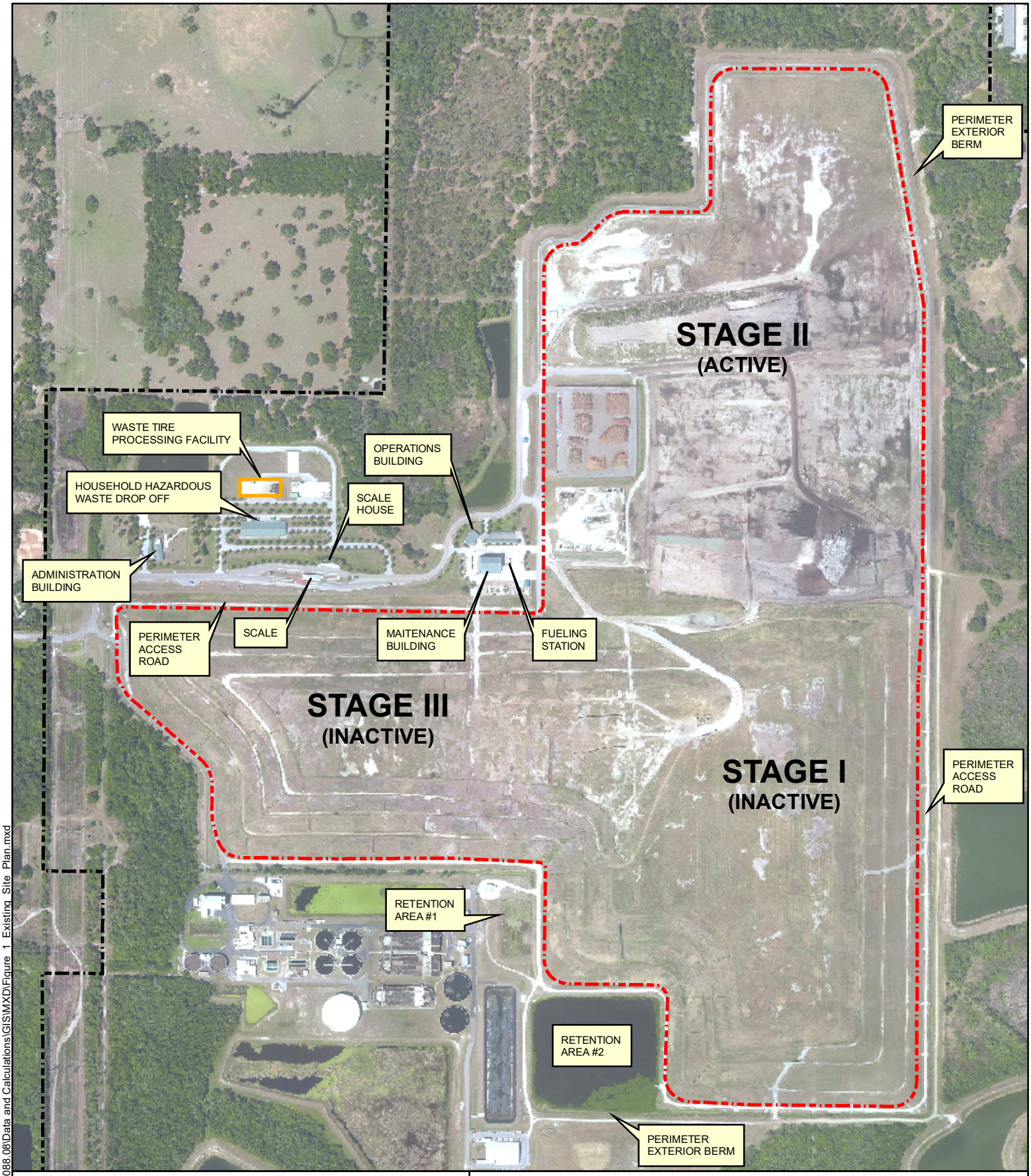

Legend

- PROPERTY BOUNDARY
- LIMITS OF WASTE
- WASTE TIRE PROCESSING FACILITY

Source:
Aerial- Pickett, 3/22/2018

FIGURE 1
EXISTING SITE PLAN
LENA ROAD LANDFILL
MANATEE COUNTY, FL

SCS ENGINEERS

Tampa, FL | February 2019

0 350 700 Feet

N

Document Path: F:\PROJECT\09217088.08\Data and Calculations\GIS\MXD\Figure 1 Existing Site Plan.mxd

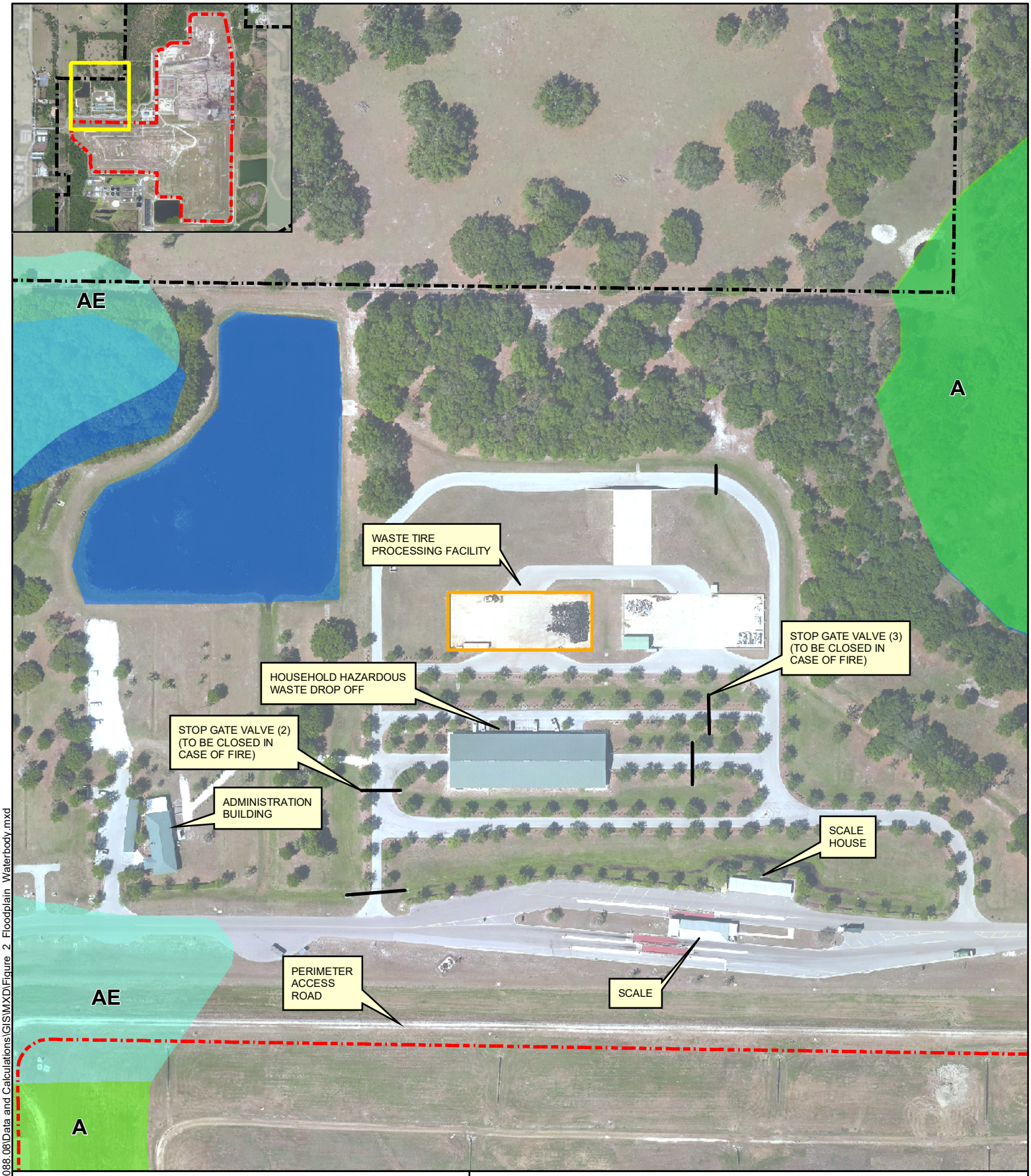

Legend

- PROPERTY BOUNDARY
- LIMITS OF WASTE
- WASTE TIRE PROCESSING FACILITY
- CULVERTS
- A: 1% Annual Chance of Flooding, no BFE
- AE: 1% Annual Chance of Flooding, with BFE
- Wetlands and Surface Waters

Source:
Aerial- Pickett, 3/22/2018; Floodzones- FEMA, Surface Water- SWFWMD, 2011

FIGURE 2
FLOODPLAIN, WETLANDS AND SURFACE WATER BODY LOCATION MAP
LENA ROAD LANDFILL
MANATEE COUNTY, FL

SCS ENGINEERS

Tampa, FL | February 2019

0 100 200 Feet

N

Document Path: F:\PROJECT\09217088.08\Data and Calculations\GIS\MXD\Figure 2 Floodplain Waterbody.mxd

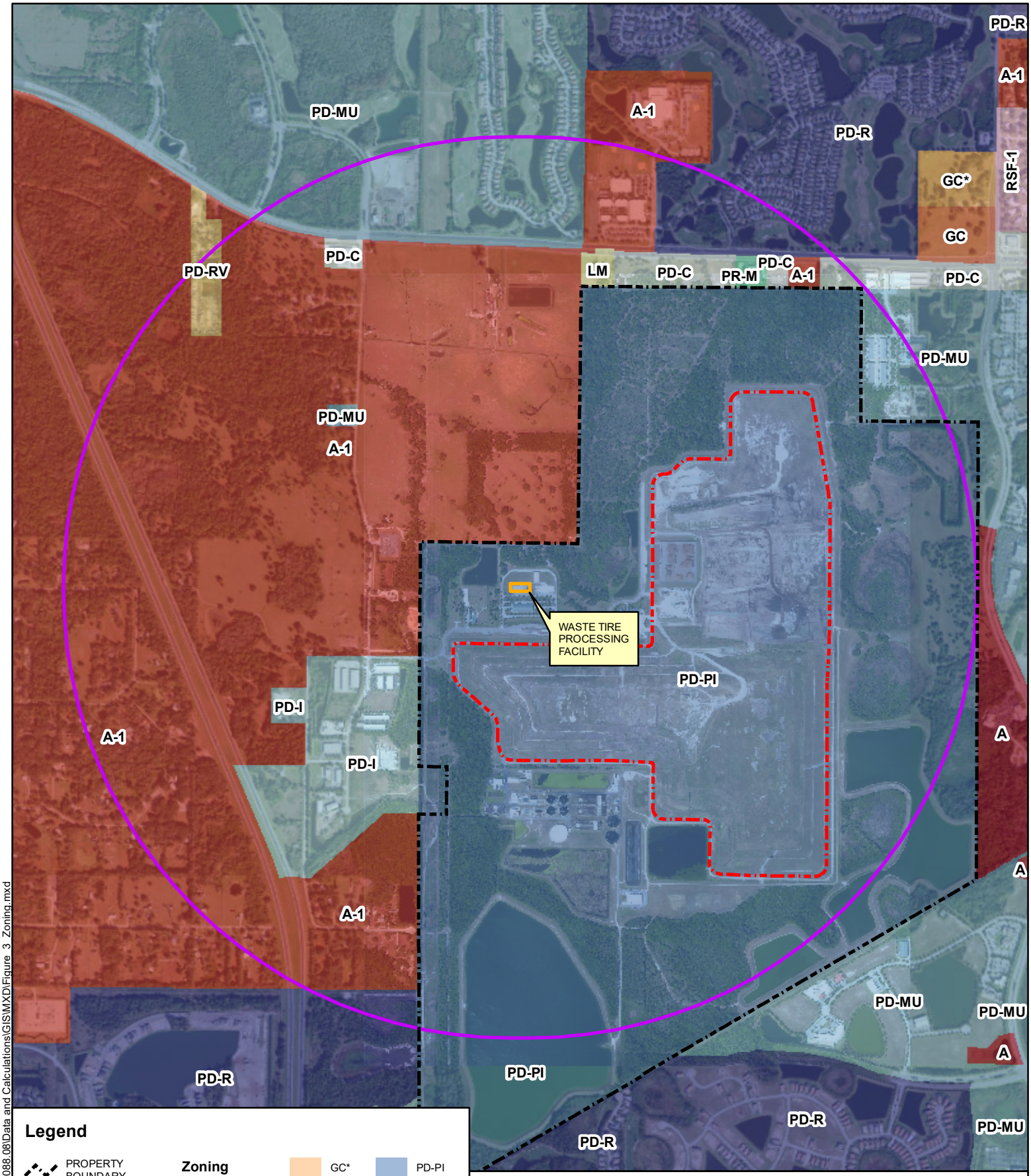

Legend

- PROPERTY BOUNDARY
- LIMITS OF WASTE
- WASTE TIRE PROCESSING FACILITY
- WASTE TIRE PROCESSING FACILITY 1-MILE BUFFER

Zoning

- UNKNOWN
- A
- A-1
- GC
- GC*
- LM
- PD-C
- PD-I
- PD-MU
- PD-PI
- PD-R
- PD-RV
- PR-M
- RSF-1

Source:
Aerial- Pickett, 3/22/2018; Zoning- Manatee County, 2018

FIGURE 3
ZONING MAP
LENA ROAD LANDFILL
MANATEE COUNTY, FL

SCS ENGINEERS

Tampa, FL | February 2019

0 750 1,500 Feet

N

Document Path: F:\PROJECT\09217088.08\Data and Calculations\GIS\MXD\Figure_3_Zoning.mxd

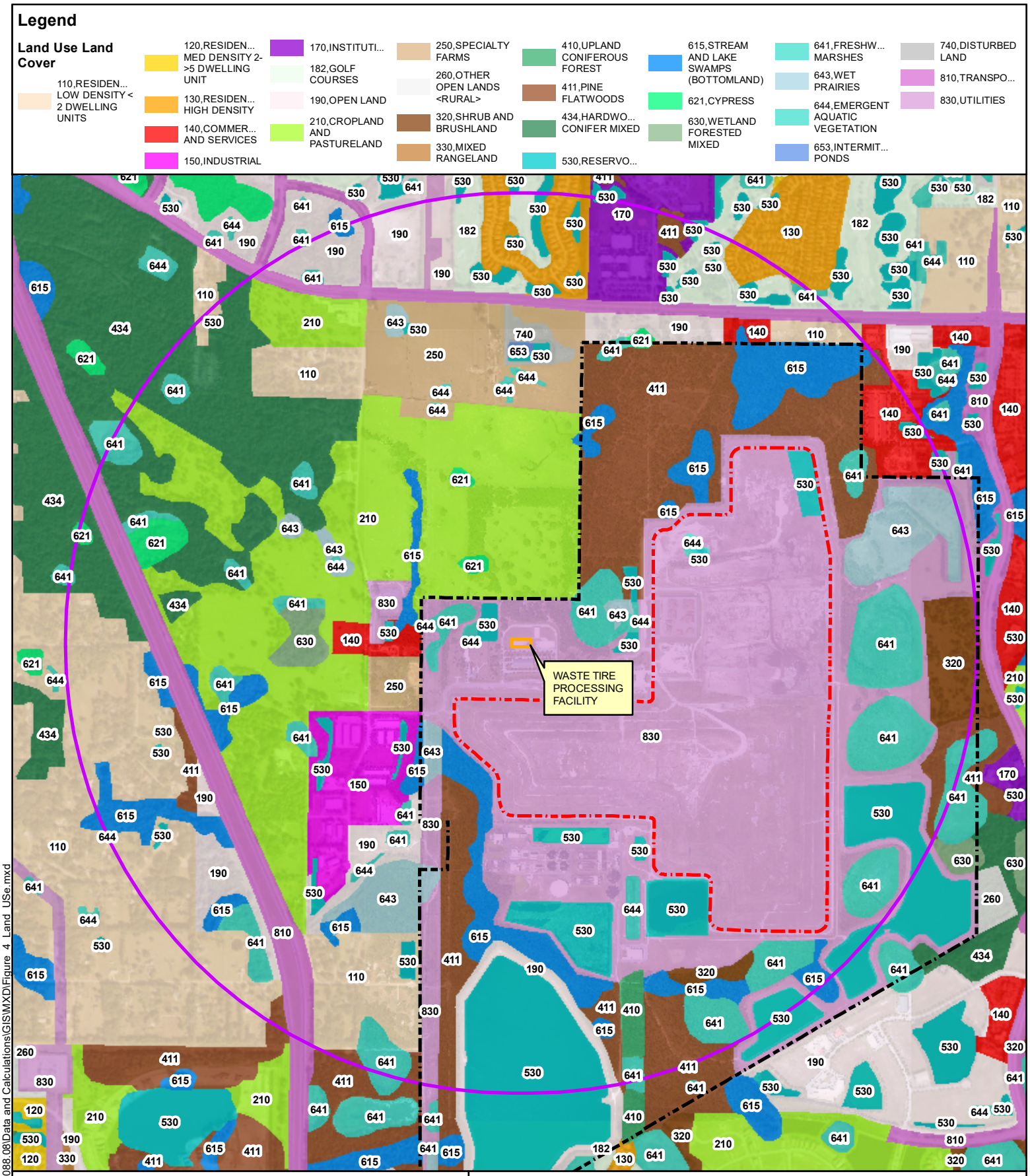

Legend

- PROPERTY
- LIMITS OF WASTE
- WASTE TIRE PROCESSING FACILITY
- WASTE TIRE PROCESSING FACILITY 1-MILE BUFFER

Source:
Aerial- Pickett, 3/22/2018; Land Use/ Land Cover- SWFWMD, 2011

FIGURE 4
LAND USE MAP
LENA ROAD LANDFILL
MANATEE COUNTY, FL

SCS ENGINEERS

Tampa, FL | February 2019

0 750 1,500 Feet

N

Document Path: F:\PROJECT\09217088.08\Data and Calculations\GIS\MXD\Figure 4 Land USe.mxd

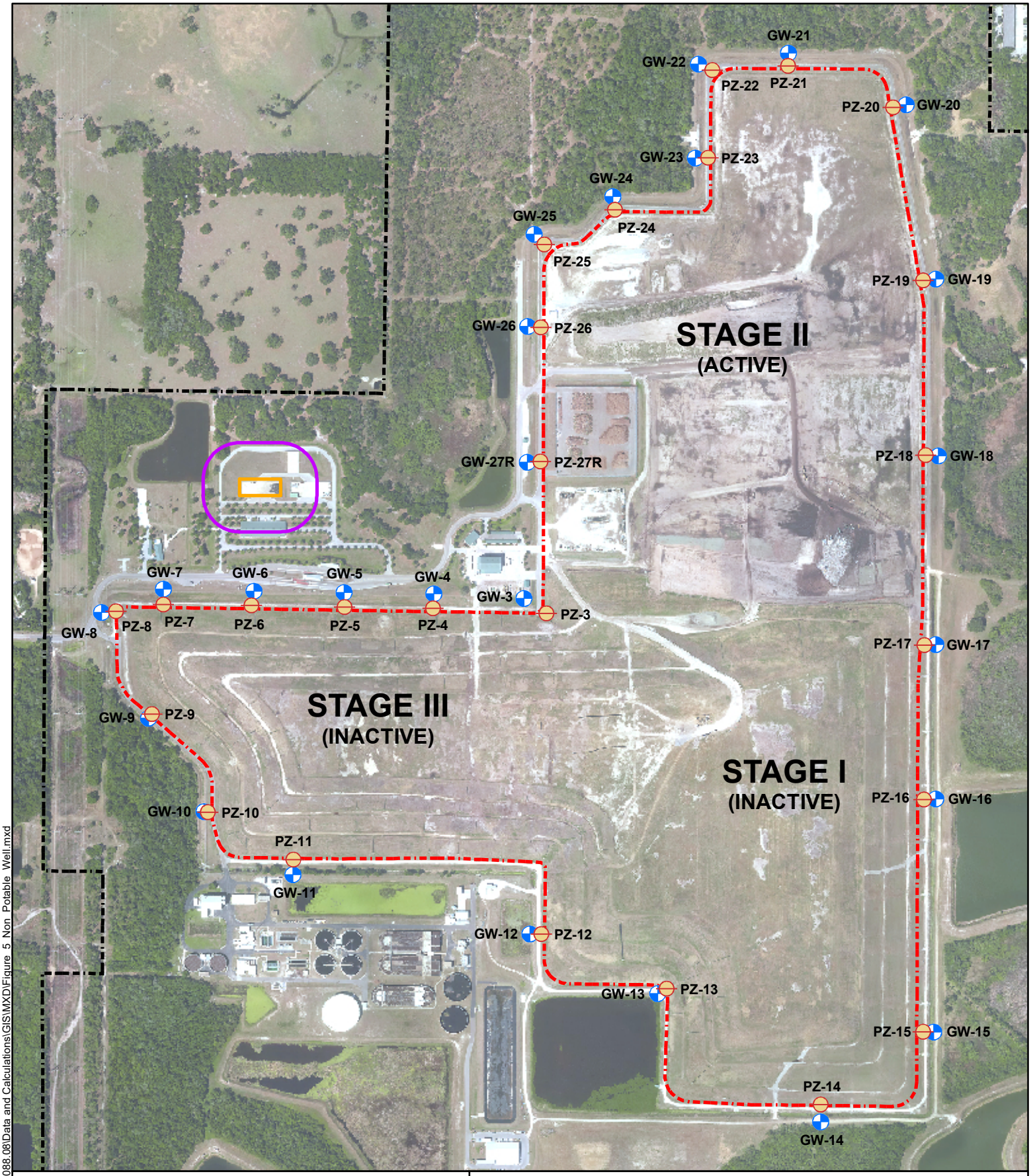

Legend

- PROPERTY BOUNDARY
- LIMITS OF WASTE
- WASTE TIRE PROCESSING FACILITY
- WASTE TIRE PROCESSING FACILITY 200 FOOT BUFFER

Well Type

- MONITORING WELL
- PIEZOMETER

Source:
Aerial- Pickett, 3/22/2018; Wells- SCS, 2018

Note- no supply wells present per search of SWFWMD well construction permits.

FIGURE 5
NON-POTABLE WELLS MAP
LENA ROAD LANDFILL
MANATEE COUNTY, FL

SCS ENGINEERS

Tampa, FL | February 2019

0 350 700 Feet

N

Document Path: F:\PROJECT\09217088.08\Data and Calculations\GIS\MXD\Figure 5 Non Potable Well.mxd

APPENDIX A

WTPF Record Drawing dated September 5, 2008

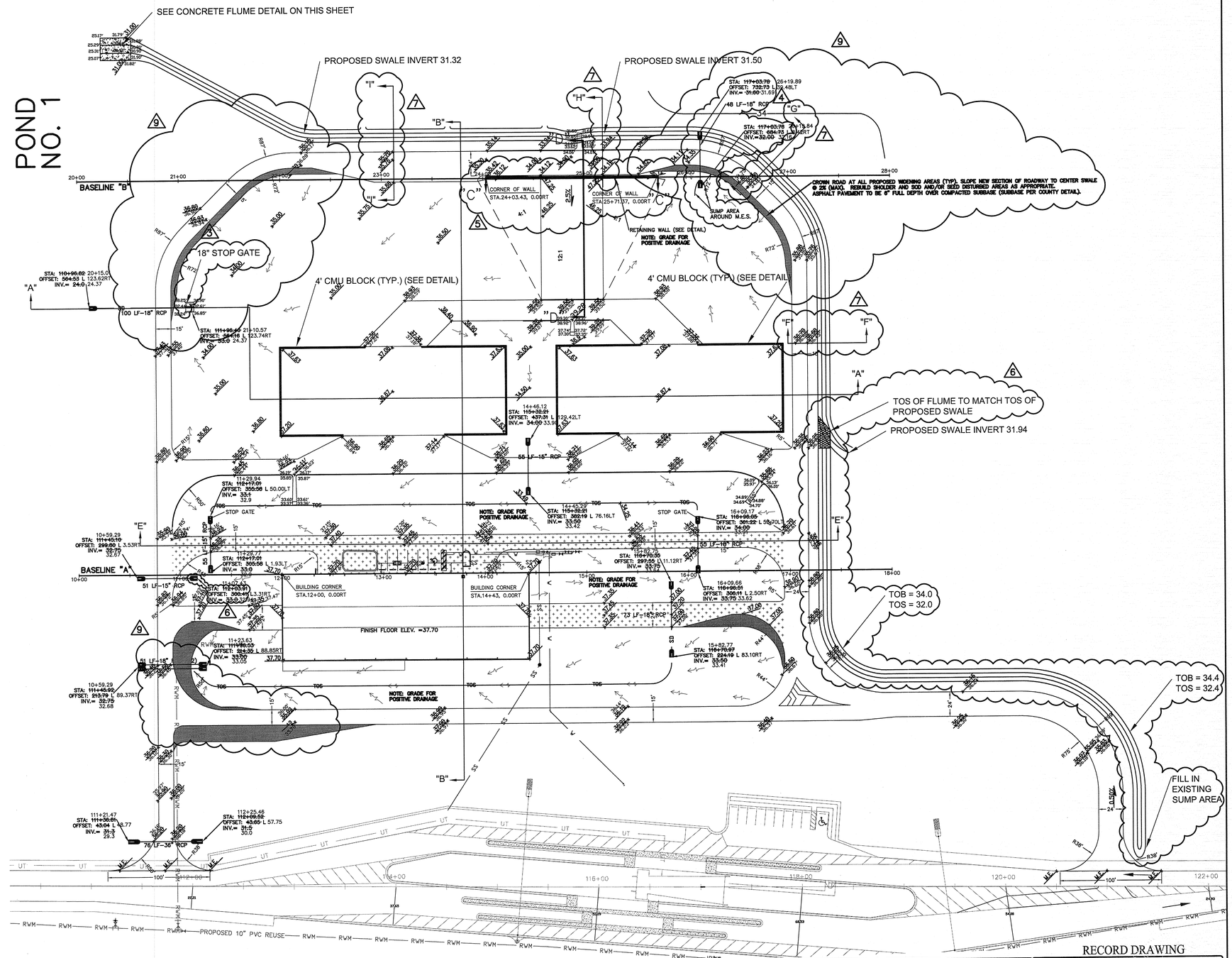

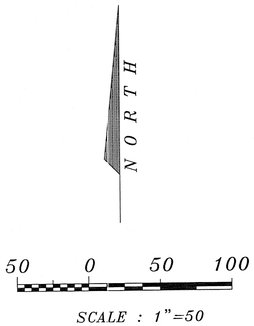

LEGEND

W W	EXISTING WATER LINE
SS SS	EXISTING SANITARY SEWER LINE
OHW OHW	EXISTING OVERHEAD WIRE
SD SD	PROPOSED STORM
W W	PROPOSED WATER LINE
SS SS	PROPOSED SANITARY SEWER LINE
RWM	PROPOSED RECLAIMED WATER MAIN
ERC	PROPOSED EROSION CONTROL SILT FENCE
37.80	PROPOSED ELEVATION
37.7	EXISTING ELEVATION
	STORM WATER FLOW DIRECTION
34	EXISTING CONTOUR
34	PROPOSED CONTOUR
	PROPOSED WHEEL STOP
	PROPOSED GALVENIZED COLUMN
	PROPOSED CONCRETE
	PROPOSED ASPHALT "LOCAL RURAL RESIDENTIAL"
	PROPOSED ASPHALT "RURAL INDUSTRIAL"
M.E.	MATCH EXISTING GRADE
	PROPOSED ROAD WIDENING

NOTES:

1. BUILDINGS AND DUMPSTER ENCLOSURE (WITH WALLS) TO BE CONSTRUCTED BY OTHERS (NIC). CONTRACTOR SHALL COORDINATE THE SEQUENCE OF THE BUILDING CONTRACTOR'S OPERATIONS AS REQUIRED BY THE SPECIFICATIONS.

NOTE:
BASELINE "A" IS BASED ON NORTH LINE OF THE DROP-OFF BUILDING. THE NORTHWEST BUILDING CORNER BEING 12+00 AND THE NORTHEAST BUILDING CORNER BEING 14+43. BASELINE "A" BEGINS WITH STATION 10+00 AND ENDS AT STATION 18+00

BASELINE "B" IS BASED ON THE WALL FOR THE LOADING RAMP AT THE DROP OFF SITE. THE NORTHWEST CORNER BEING 24+03.43 AND THE NORTHEAST CORNER BEING 25+71.37 BASELINE "B" BEGINS WITH STATION 20+00 AND ENDS AT STATION 28+00

NO.	REVISION	DATE	BY
1.	ADDED FLUMES	10/02/08	DVE
2.	SCALED FLUME GRADES	10/14/08	DVE
3.	ADDED WIDENING & PARKING	11/08/08	DVE
4.	ADDED NEW BASELINE PER COUNTY COMMENTS	12/12/08	DVE

Hyatt Survey Services, Inc.
11007 8TH AVENUE EAST BRADENTON, FLORIDA 34212
PH. (941) 748-4693 FAX (941) 744-1643

CADD FILE: C-6,8,10,12,14	PROJ MAN: DVE	DRAWN BY: DVE	CHECKED BY: RPH
PROJ.:07-1346	FB 110, PG 75	FIELD DATE:12/4/07	SCALE:

RECORD DRAWING
THIS SURVEY IS NOT VALID WITHOUT THE SIGNATURE AND ORIGINAL RAISED SEAL OF A FLORIDA LICENSED SURVEYOR AND MAPPER.
RUSSELL P. HYATT, P.S.M.
FLORIDA SURVEYORS REGISTRATION NO. 5303

Post, Buckley, Schuh, & Jernigan, Inc., D/B/A
PBSJ
PRINCIPAL ADDRESS
2001 NW 107th AVE
MIAMI, FLORIDA 33172-2507
FBPR CERT. OF AUTH. NO. 24
PRODUCTION ADDRESS
2830 FRUITVILLE ROAD
SUITE 130
SARASOTA, FLORIDA 34237
Ph. (941) 954-4036

CLIENT
MANATEE COUNTY PROJECT MANAGEMENT DEPARTMENT
1026 26TH AVENUE EAST
BRADENTON, FLORIDA 34208
MANATEE COUNTY FLORIDA

PROJECT
LENA ROAD LANDFILL - PHASE II
CONSTRUCTION PACKAGE NO. 1
SITEWORK

TASK
COMMUNITY DROP-OFF
PAVING, GRADING & DRAINAGE PLAN

ORIGINAL DATE: 10/31/06
REVISIONS:
1 SLOTTED CURB 02/06/07
2 ASPHALT LIMITS/TYPE 2/14/07
3 STOP GATE LABEL 2/16/07
4 FLOW ARROWS, M.E.S., AND ASPHALT NOTE 06/20/07
5 RETAINING WALL LENGTH 07/11/07
6 MITERED END SECTION, SWALE, SLOTTED CURB REMOVAL 07/18/07
7 CROSS SECTION F,G,H,I 08/30/07
8 ROAD WIDENING 07/11/08
9 ROADWAY RADII 09/05/08
10
11
12

09/05/08
R. MICHAEL PEEL, P.E. Date
FL# 60211

PBS&J NO. 120498.13
DATE 09/05/08
DRAWN JEI
CHECKED ADR
QC BMP
SHEET C-14

JAN 19 2009

APPENDIX B

Storage Pad Calculations and Maximum Storage Capacity

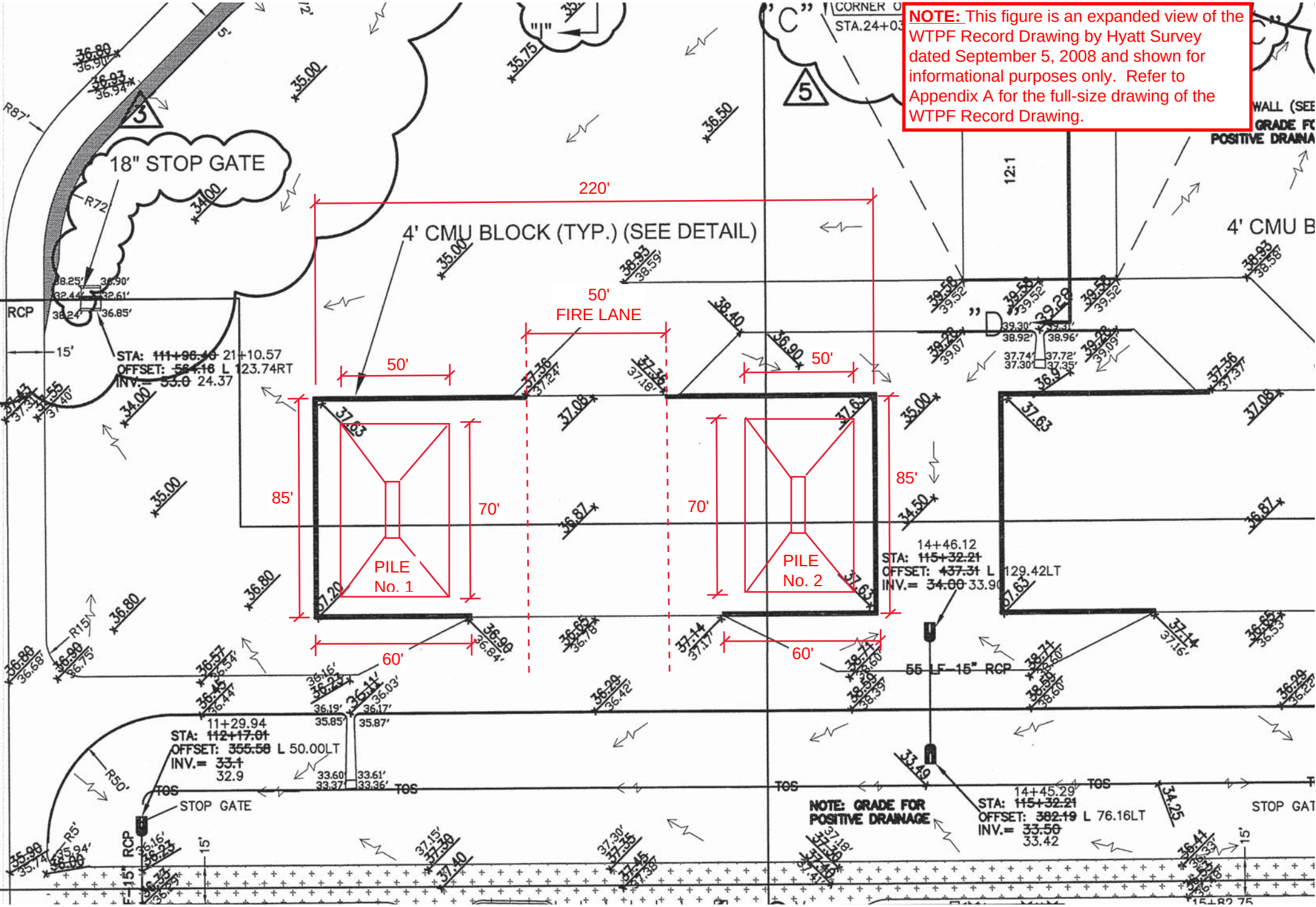
NOTE: This figure is an expanded view of the WTPF Record Drawing by Hyatt Survey dated September 5, 2008 and shown for informational purposes only. Refer to Appendix A for the full-size drawing of the WTPF Record Drawing.
18" STOP GATE
4' CMU BLOCK (TYP.) (SEE DETAIL)
220'
50' FIRE LANE
50'
50'
85'
70'
85'
70'
60'
60'
PILE No. 1
PILE No. 2
STA: 111+96.40 21+10.57
OFFSET: 564.16 L 123.74RT
INV.= 33.0 24.37
14+46.12
STA: 115+32.21
OFFSET: 437.31 L 129.42LT
INV.= 34.00 33.90
11+29.94
STA: 112+17.01
OFFSET: 355.58 L 50.00LT
INV.= 33.1
32.9
55 LF 15" RCP
STOP GATE
NOTE: GRADE FOR POSITIVE DRAINAGE
14+45.29
STA: 115+32.21
OFFSET: 382.19 L 76.16LT
INV.= 33.50
33.42
TOS
RCP
12:1

Computation

Project	Lena Road Waste Tire Processing Facility	*Computed*	CAR	*Date*	12/18/2018
Subject	Permit Renewal Application	*Reviewed*	DJM	*Date*	2/11/2018
Task	Pad Dimmensions and Volumes				

Whole Tire Storage Area

Tire Piles	1	2
Area (acre)[1]	0.08	0.08
Bottom (ft)		
Width W1	50.00	50.00
Length L1	70.00	70.00
Fill Height (ft)		
Height H	15.00	15.00
Top (ft)		
Width W2	5.00	5.00
Length L2	25.00	25.00
Pad Volume without void Space[2]		
Vol (ft^3)	21,432.19	21,432.19
Vol (yd^3)	793.78	793.78
Tires/Pad[3]	7,937.85	7,937.85
Storage/Pad (lb)[4]	317,513.91	317,513.91
Storage/Pad (ton)	158.76	158.76
Total Tire Volume (yd^3)	**1,587.57**	
Total Tire Storage (tons)	**317.51**	
Total Tire Storage (ft^2)	**7,000.00**	

Notes:

1. Refer to WTPF Site Plan and Layout Configurations for Pad Dimmensions (Attachment 1)
2. Pad Volume based on a frustum of a pyramid formula. Assume side slopes are 1 horizontal to 1 vertical
3. Based on 10 tires/yd^3. Conversion factor from Scrap Tire management Council (Attachment 2)
4. Storage/Pad based on a weight of 40 lbs. Assume tires received include 25% truck and 75% passenger (Attachment 2)

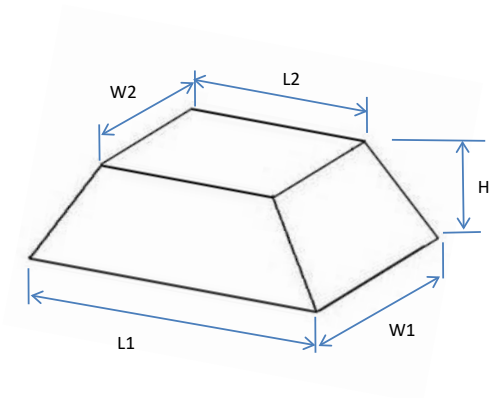

$$Volume = \left(\frac{H}{3}\right)[(W1xL1) + (W2xL2) + \sqrt{(W1xL1)x(W2xL2)}]$$

APPENDIX C

Emergency Preparedness Manual and Fire Safety Survey

In the event of a fire, the following action should be taken:

1. Evacuate all people from the immediate area, and secure the area to minimize or prevent personal injury.

2. Immediately notify the Fire Department by dialing 911, and then notify the Solid Waste Operations Manager, Landfill Superintendent and other personnel. Their names and emergency and after hour contact numbers are given on page 2.

3. At the Waste Tire Processing Facility, close the stop-gate valve on the storm water culvert under the road, and located approximately 115-feet northwest of the waste tire pile. This valve needs to be closed to prevent runoff from entering the wetlands to the northwest.

4. Establish a command post away from the area to coordinate fire control and environmental protection efforts.

5. Use available fire extinguishers, soil, and water to control the fire as much as possible until the fire department can respond. Emergency response equipment located on-site is listed on page 3.

6. Once the fire is out, residual clean-up should be completed within seven days. Liquid residue and runoff waste from the fire fighting efforts shall be put in barrels or portable tanks and stored in the household hazardous waster storage facility. After testing to determine it the waste is hazardous or not, the waste shall be transported for disposal by a licensed waste management company specialized in this type of cleanup and disposal.

7. Within 24 hours of the incident, call the Florida Department of Environmental Protection – Solid Waste Section in Temple Terrace at 813/632-7600.

Manatee County - Lena Road Landfill WASTE TIRE PROCESSING FACILITY
EMERGENCY PREPAREDNESS MANUAL
EMERGENCY AND AFTER HOURS CONTACTS

Notify the Following Persons or Agencies in the Event of Fire or Other Emergency

Person/Agency	Telephone Number
Fire Department Chief Bryon Teates Braden River Fire Department	911 941-751-5611
Ambulance	911
Sheriff	911
C. Mike Gore, Director, Utilities Department	Cell phone: 941-405-9794 Office: 941-792-8811 x 5323
David L. Pickup, Manager, Special Waste	Cell phone: 941-962-7087 Office: 941-748-5543 x 8049
Jeanne Detweiler, Superintendent, Solid Waste Enforcement.	Cell phone: 941-812-4301 Office: 941-748-5543 x 8013
Bryan White, Landfill Superintendent	Cell phone: 941-812-2455 Office: 941-748-5543 x 8008
Anthony Detweiler, Landfill Operations Supervisor	Cell phone: 941-812-8796 Office: 941-748-5543 x 8016
Gus A. Difonzo, Deputy Director, Utilities Department	Cell phone: 941-313-0214 Office: 941-792-8811 x 5473
Department of Environmental Protection	Phone: 813-470-5700

Manatee County - Lena Road Landfill

WASTE TIRE PROCESSING FACILITY
EMERGENCY PREPAREDNESS MANUAL
EMERGENCY RESPONSE EQUIPMENT LOCATED ON-SITE

Equipment	Location	Use
Fire Extinguishers	Main office building, operations building, maintenance garage, scalehouse, fuel storage area, household hazardous waste building, all vehicles, all equipment	All types of fires
Water Wagon	On-site	Fight fire, protect nearby property
Portable Pumps and Hose	On-site at maintenance garage or at various locations of use	Pump water from stormwater ponds to fill water wagon or to fight fire directly
Front End Loader	On-site	Place soil on fire
Scraper	On-site	Haul soil to area of fire
Soil Stockpile	On-site cover soil stockpile located on landfill property	Smother fire
First Aid Kits	Main office building, operations building, maintenance garage, scalehouse, household hazardhouse waste building, and all vehicles	Minor cuts, abrasions, and burns, emergency first aid while awaiting paramedics
Portable Two Way Radios	Locations Vary	Emergency communication between County Departments and personnel in the field
Telephones	Main office building, operations building, maintenance garage, scalehouse, household hazardous waste building and cell phones	Emergency communications

East Manatee Fire Rescue

3200 Lakewood Ranch Blvd
Bradenton, Fl 34211
Office: 941-751-5611 Fax: 941-751-5910 E-mail: admin@emfr.org

IN CASE OF EMERGENCY Call 911

08/02/18

ANATEE COUNTY LANDFILL -TIRES

3333 Lena RD
BRADENTON, FL

Inspection # 128313

Property # 8802 **Occupancy Type** Storage

Inspection History

Inspection Date	Status	Inspected By
08/02/18	Completed	Inspector Carter

East Manatee Fire Rescue
Jonathan Carter
FIRE INSPECTOR
3200 Lakewood Ranch Blvd.
Bradenton, FL 34211
Cell 941-737-2708
Office 941-751-5611
Fax 941-751-5910
E-mail: jcarter@emfr.org

Inspector Carter

Inspection Remarks

No violations noted thank you!

APPENDIX D

WTPF Equipment Specifications

950K
Wheel Loader

Engine		
Engine Model	Cat® C7.1 ACERT™	
Max Net Power (1,900 rpm) – ISO 9249	157 kW	211 hp
Max Net Power (1,900 rpm) – SAE J1349	157 kW	211 hp

Buckets		
Bucket Capacities	2.50 to 9.20 m^3	3.25 to 12.00 yd^3
Weights		
Operating Weight	19 425 kg	42,811 lb

• For 3.1 m^3 (4.0 yd^3) general purpose buckets with BOCE.

950K Wheel Loader Specifications

Engine

Engine Model	Cat® C7.1 ACERT™	
Max Gross Power (1,900 rpm) – SAE J1995	173 kW	232 hp
Max Gross Power (1,900 rpm) – SAE J1995 (metric)	175 kW	234 hp
Max Net Power (1,900 rpm) – ISO 9249	157 kW	211 hp
Max Net Power (1,900 rpm) – ISO 9249 (metric)	159 kW	213 hp
Max Net Power (1,900 rpm) – SAE J1349	157 kW	211 hp
Max Net Power (1,900 rpm) – SAE J1349 (metric)	159 kW	213 hp
Max Net Power (1,900 rpm) – EEC 80/1269	157 kW	211 hp
Max Net Power (1,900 rpm) – EEC 80/1269 (metric)	159 kW	213 hp
Peak Gross Torque (1,300 rpm) – SAE J1995	1054 N·m	777 ft-lb
Peak Net Torque (1,400 rpm) – SAE J1349	988 N·m	729 ft-lb
Bore	105 mm	4.1 in
Stroke	135 mm	5.3 in
Displacement	7.01 L	427.8 in^3

- Cat engine with ACERT™ Technology – meets Tier 4 Interim/Stage IIIB emissions requirements.

Weights

Operating Weight	19 425 kg	42,811 lb

- For 3.1 m^3 (4.0 yd^3) general purpose buckets with BOCE.

Buckets

Bucket Capacities	2.50 to 9.20 m^3	3.25 to 12.00 yd^3

- Refer to bucket selection chart.

Operating Specifications

Static tipping load full 40° turn – ISO 14397-1*	11 008 kg	24,261 lb
Static tipping load full 40° turn – Rigid Tires**	11 774 kg	25,951 lb
Breakout Force	161 kN	36,203 lb

- For 3.1 m^3 (4.0 yd^3) general purpose buckets with BOCE.

* Full compliance to ISO (2007) 14397-1 Sections 1 thru 6, which requires 2% verification between calculations and testing.

** Compliance to ISO (2007) 14397-1 Sections 1 thru 5.

Transmission

Forward 1	6.9 km/h	4.3 mph
Forward 2	12.9 km/h	8.0 mph
Forward 3	22.7 km/h	14.1 mph
Forward 4	37.9 km/h	23.6 mph
Reverse 1	7.5 km/h	4.7 mph
Reverse 2	14.1 km/h	8.8 mph
Reverse 3	24.8 km/h	15.4 mph
Reverse 4	39.8 km/h	24.7 mph

- Maximum travel speed in standard vehicle with empty bucket and standard L3 tires with 787 mm (31 in) roll radius.

Hydraulic System

Steering System Pump Type	Piston	
Implement System – Maximum Pump Output (2,340 rpm)	340 L/min	90 gal/min
Implement System – Maximum Operating Pressure	26 200 kPa	3,800 psi
Implement System – Optional 3rd and 4th Function Maximum Flow	280 L/min	74 gal/min
Implement System – Optional 3rd and 4th Function Maximum Pressure	20 700 kPa	3,000 psi
Hydraulic Cycle Time – Raise from Carry Position	5.9 Seconds	
Hydraulic Cycle Time – Dump, at Maximum Raise	1.8 Seconds	
Hydraulic Cycle Time – Lower, Empty, Float Down	2.5 Seconds	
Hydraulic Cycle Time – Total	10 Seconds	

- Cycle time with rated payload.

Brakes

Brakes	Meet OSHA, SAE J1473 OCT90 and ISO 3450-1985 required standards

Axles

Front	Fixed	
Rear	Oscillating ± 13 degrees	
Maximum Single-Wheel Rise and Fall	481 mm	18.9 in

Tires

- Choose from a variety of tires to match your application.
- Choices include:
  23.5R25 VSW BS L2 Radial
  23.5R25 VUT BS L2 Radial
  750/65R25 VLT BS E3/L3 Radial
  23.5R25 VJT BS E3/L3 Radial
  23.5-25 SRG LD FS L3 Bias
  23.5R25 XHA2 MX L3 Radial
  23.5R25 XHA MX L3 Radial
  23.5R25 VMT BS L3 Radial
  725/70-25 LS 150 Titan L4 Bias
  23.5R25 XLDD2 MX L5 Radial
  Cat Flexport™
- NOTE: In certain applications (such as load and carry), the loader's productive capabilities might exceed the tires' tonnes-km/h (ton-mph) capabilities. Caterpillar recommends that you consult a tire supplier to evaluate all conditions before selecting a tire model. Other special tires are available on request.

Cab

ROPS/FOPS	Meets SAE and ISO standards

- Cat cab with a four post integrated Rollover Protective Structure (ROPS) are standard in North America and Europe.
- ROPS meets SAE J1040 APR88 and ISO 3471:1994 criteria.
- Falling Objects Protective Structure (FOPS) meets SAE J231 JAN81 and ISO:1992 Level II criteria.

Sound

- The sound values indicated below are for specific operating conditions only. Machine and operator sound levels will vary at different engine and/or cooling fan speeds. Hearing protection may be needed when the machine is operated with a cabin that is not properly maintained, or when the doors and/or windows are open for extended periods or in a noisy environment.
- The operator sound pressure level for a standard machine configuration, measured according to the procedures specified in ISO 6396:2008, is 71 dB(A) with the cooling fan speed set at maximum value.
- The machine sound power level for a standard machine configuration, measured according to the procedures specified in ISO 6395:2008, is 110 dB(A) with the cooling fan speed set at maximum value.
- The machine sound pressure level for a standard machine configuration, measured according to the procedures specified in SAE J88:2006, is 75 dB(A). The measurement was conducted under the following conditions: distance of 15 m (49.2 ft), moving forward in an intermediate gear ratio, static hydraulic cycle (with no payload) and with the cooling fan speed set at maximum value.
- The operator sound pressure level for a machine installed with a Low Sound package, measured according to the procedures specified in ISO 6396:2008, is 69 dB(A) with the cooling fan speed set at maximum value.
- The machine sound power level for a machine installed with a Low Sound package, measured according to the procedures specified in ISO 6396:2008, is 107 dB(A) with the cooling fan speed set at maximum value.

Service Refill Capacities

Fuel Tank – Standard	314 L	83 gal
Cooling System	60 L	15.9 gal
Crankcase	18 L	4.8 gal
Transmission	43 L	11.4 gal
Differentials and Final Drives – Front	43 L	11.4 gal
Differentials and Final Drives – Rear	43 L	11.4 gal
Hydraulic Tank	189 L	49.9 gal

- All non-road Tier 4/Stage IIIB and IV, and Japan (MLIT) Step 4 diesel engines are required to use:
  – Ultra Low Sulfur Diesel (ULSD) fuels containing 15 ppm (mg/kg) sulfur or less. Biodiesel blends up to B20 are acceptable when blended with 15 ppm (mg/kg) sulfur or less ULSD and when the biodiesel feedstock meets ASTM D7467 specifications.
  – Cat® DEO-ULS™ or oils that meet the Cat ECF-3, API CJ-4, and ACEA E9 specifications are required.

950K Wheel Loader Specifications

Dimensions

All dimensions are approximate and based on L3 Michelin XHA2 tires.

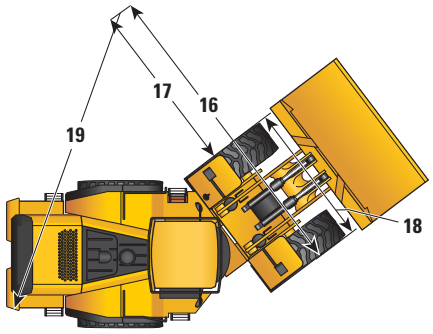

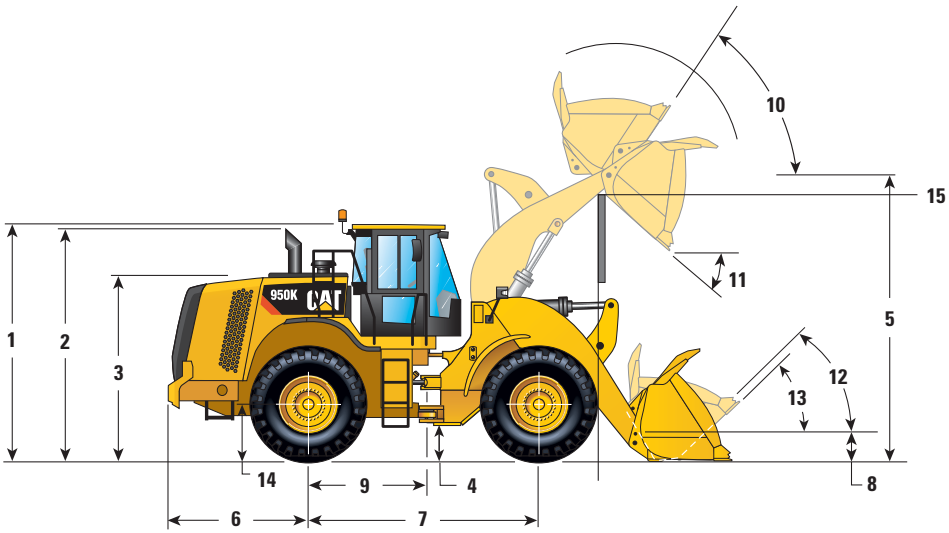

1	Height to Top of ROPS	3356 mm	11'0"
2	Height to Top of Exhaust Pipe	3099 mm	10'2"
3	Height to Top of Hood	2415 mm	7'11"
4	Ground Clearance With 23.5R25 (See Tire Option Chart for Other Tires)	397 mm	1'3"
5	B-Pin Height – Standard	4021 mm	13'2"
	B-Pin Height – High-Lift	4526 mm	14'10"
6	Center Line of Rear Axle to Edge of Counterweight	1905 mm	6'3"
7	Wheelbase	3350 mm	10'11"
8	B-Pin Height @ Carry – Standard	659 mm	26"
9	Center Line of Rear Axle to Hitch	1510 mm	4'11"
10	Rack Back @ Maximum Lift	59 degrees	
11	Dump Angle @ Maximum Lift	51 degrees	
12	Rack Back @ Carry	46 degrees	
13	Rack Back @ Ground	38 degrees	
14	Height to Center Line of Axle	688 mm	2'3"
15	Lift Arm Clearance	3275 mm	10'7"
	Lift Arm Clearance @ High Lift	3625 mm	11'9"

Turning Radius

All dimensions are approximate and based on L3 Michelin XHA2 tires.

16	Clearance Circle to Outside of Tires	5952 mm	19'6"
17	Clearance Circle to Inside of Tires	3233 mm	10'7"
18	Width Over Tires	2719 mm	8'11"
19	Clearance Circle to Outside Edge of Counterweight	6025 mm	19'9"

APPENDIX E

Waste Tire Quarterly Progress Reports

Utilities
Recycling
3333 Lena Road
Bradenton, FL 34211
Phone: (941) 748-5543
www.mymanatee.org/recycling

January 17, 2018

Mr. Ed Watson
Florida Department of Environmental Protection
Southwest District
13051 North Telecom Parkway
Temple Terrace, Florida 33637-0926

RE: Lena Road Landfill Quarterly Waste Tire Processing Facility Report
Fourth Quarter 2017
Waste Tire Permit #126654-004-WT/02

Dear Mr. Watson:

Enclosed is the above referenced report for the period of October 1, 2017 to December 31, 2017. The supporting reports are generated from the Lena Road Landfill Scalehouse. Only pertinent information from the reports is included in the waste tire report. This data includes Tires In, Tires Out, and Illegal Dumping – Tires. They are defined as follows:

- Tires In: Tires delivered to the Landfill by the general public.
- Tires Out: Tires which are removed from the waste tire storage area by the County's contracted vendor for processing.
- Illegal Dumping – Tires: Tires that are illegally dumped within Manatee County then subsequently picked up and delivered to the Landfill by various public agencies.

All tires delivered to the Landfill are stockpiled and subsequently removed from the site by a contracted vendor. No processing or consumption of tires occurs at the Landfill. Therefore, processed, adjusted and consumed tires have been recorded as zero. All other tire categories have been entered where appropriate. All tires recorded for this report are considered used tires.

If you should have any questions or need additional information, please feel free to call me at 941-748-5543, ext. 8016.

Sincerely,

Anthony Detweiler
Landfill Operations Maintenance Supervisor

Enc. 1

cc: Mike Gore, Director, Utilities Department
Robert Shankle, Solid Waste Division Manager
Bryan White, Landfill Superintendent
Daniel R. Cooper, P.E., Project Director, SCS Engineers

PRISCILLA TRACE * CHARLES B. SMITH * STEPHEN JONSSON * ROBIN DiSABATINO * VANESSA BAUGH * CAROL WHITMORE * BETSY BENAC
District 1 District 2 District 3 District 4 District 5 District 6 District 7

Florida Department of Environmental Protection

Bob Martinez Center
2600 Blair Stone Road
Tallahassee, Florida 32399-2400

DEP Form # 62-701.900(21)

Form Title: Waste Tire Processing Facility Quarterly Report

Effective Date: January 6, 2010

DEP Application No. _____
(Completed by DEP)

WASTE TIRE PROCESSING FACILITY QUARTERLY REPORT

Pursuant to Rule 62-711.530, Florida Administrative Code, the owner or operator of a waste tire processing facility shall submit the following information to the Department quarterly.

Quarter covered by this report Fourth Quarter 2017 (First quarter begins on January 1 of any given year)

1. Facility name: Manatee County Solid Waste Management Facility - Manatee County Utilities Department
2. Facility mailing address: 3333 Lena Road

   City: Bradenton County: Manatee Zip: 34211
3. Facility permit number: 12665-004-WT/02
4. Facility telephone number ( ) 941-748-5543 x8016
5. Authorized person preparing report: Anthony Detweiler
6. Affiliation with facility: Landfill Operations Maintenance Supervisor
7. Telephone number (if different from above): ( )
8. Activity: Report in tons

	Beginning Inventory	Received	Processed	Consumed	Removed	Adjustments	Ending Inventory
Used Tires	533.74	476.12			380.63		629.23
Other Whole Tires							
Processed Tires							
Processing Waste							
Other							
Total	533.74	476.12			380.63		629.23

a. Explain all inventory adjustments.

b. List any period in which one or more category of inventory exceeded the permitted maximum for that category. How was that condition relieved?

For any excess inventory at the end of the quarter, state how and when this condition will be relieved. Attach Additional sheets, if necessary.

9. Certification: To the best of my knowledge and belief, I certify the information provided in this report is true, accurate, and complete.

Anthony Detweiler, Landfill Operations Supervisor		January 17, 2018
Print Name of Authorized Agent	Signature of Authorized Agent	Date

Mail completed form to the appropriate District office listed below

Northwest District	Northeast District	Central District	Southwest District	South District	Southeast District
160 Government Center	7825 Baymeadows Way, Ste. 200 B	3319 Maguire Blvd., Ste. 232	13051 N. Telecom Pky.	2295 Victoria Ave., Ste. 364	400 North Congress Ave.
Pensacola, FL 32501-5794	Jacksonville, FL 32256-7590	Orlando, FL 32803-3767	Temple Terrace, FL	Fort Myers, FL 33902-2549	West Palm Beach, FL 33401
850-595-8360	904-807-3300	407-894-7555	813-632-7600	239-332-6975	561-681-6600

Utilities
Recycling
3333 Lena Road
Bradenton, FL 34211
Phone: (941) 748-5543
www.mymanatee.org/recycling

April 16, 2018

Mr. Steve Tafuni
Florida Department of Environmental Protection
Southwest District
13051 North Telecom Parkway
Temple Terrace, Florida 33637-0926

RE: Lena Road Landfill Quarterly Waste Tire Processing Facility Report
Second Quarter 2018
Waste Tire Permit #126654-004-WT/02

Dear Mr. Watson:

Enclosed is the above referenced report for the period of January 1, 2018 to March 31, 2018. The supporting reports are generated from the Lena Road Landfill Scalehouse. Only pertinent information from the reports is included in the waste tire report. This data includes Tires In, Tires Out, and Illegal Dumping – Tires. They are defined as follows:

- Tires In: Tires delivered to the Landfill by the general public.
- Tires Out: Tires which are removed from the waste tire storage area by the County's contracted vendor for processing.
- Illegal Dumping – Tires: Tires that are illegally dumped within Manatee County then subsequently picked up and delivered to the Landfill by various public agencies.

All tires delivered to the Landfill are stockpiled and subsequently removed from the site by a contracted vendor. No processing or consumption of tires occurs at the Landfill. Therefore, processed, adjusted and consumed tires have been recorded as zero. All other tire categories have been entered where appropriate. All tires recorded for this report are considered used tires.

If you should have any questions or need additional information, please feel free to call me at 941-748-5543, ext. 8016.

Sincerely,

Anthony Detweiler

Anthony Detweiler
Landfill Operations Maintenance Supervisor

Enc. 1

cc: Mike Gore, Director, Utilities Department
Robert Shankle, Solid Waste Division Manager
Bryan White, Landfill Superintendent
Daniel R. Cooper, P.E., Project Director, SCS Engineers

PRISCILLA TRACE * CHARLES B. SMITH * STEPHEN JONSSON * ROBIN DiSABATINO * VANESSA BAUGH * CAROL WHITMORE * BETSY BENAC
District 1 District 2 District 3 District 4 District 5 District 6 District 7

Florida Department of Environmental Protection

Bob Martinez Center
2600 Blair Stone Road
Tallahassee, Florida 32399-2400

DEP Form # 62-701 900(21)
Form Title: Waste Tire Processing Facility Quarterly Report
Effective Date: January 6, 2010
DEP Application No. _____
(Completed by DEP)

WASTE TIRE PROCESSING FACILITY QUARTERLY REPORT

Pursuant to Rule 62-711.530, Florida Administrative Code, the owner or operator of a waste tire processing facility shall submit the following information to the Department quarterly.

Quarter covered by this report Second Quarter 2018 (First quarter begins on January 1 of any given year)

1. Facility name: Manatee County Solid Waste Management Facility - Manatee County Utilities Department
2. Facility mailing address: 3333 Lena Road

   City: Bradenton County: Manatee Zip: 34211
3. Facility permit number: 12665-004-WT/02
4. Facility telephone number ( ) 941-748-5543 x8016
5. Authorized person preparing report: Anthony Detweiler
6. Affiliation with facility: Landfill Operations Maintenance Supervisor
7. Telephone number (if different from above): ( )
8. Activity: Report in tons

	Beginning Inventory	Received	Processed	Consumed	Removed	Adjustments	Ending Inventory
Used Tires	629.23	435.28			441.04		623.47
Other Whole Tires							
Processed Tires							
Processing Waste							
Other							
Total	629.23	435.28			441.04		623.47

a. Explain all inventory adjustments.

b. List any period in which one or more category of inventory exceeded the permitted maximum for that category. How was that condition relieved?

For any excess inventory at the end of the quarter, state how and when this condition will be relieved. Attach Additional sheets, if necessary.

9. Certification: To the best of my knowledge and belief, I certify the information provided in this report is true, accurate, and complete.

Anthony Detweiler, Landfill Operations Supervisor	Anthony Detweiler	April 16, 2018
Print Name of Authorized Agent	Signature of Authorized Agent	Date

Mail completed form to the appropriate District office listed below

Northwest District	Northeast District	Central District	Southwest District	South District	Southeast District
160 Government Center	7825 Baymeadows Way, Ste. 200 B	3319 Maguire Blvd., Ste. 232	13051 N. Telecom Pky	2295 Victoria Ave., Ste. 364	400 North Congress Ave.
Pensacola, FL 32501-5794	Jacksonville, FL 32256-7590	Orlando, FL 32803-3767	Temple Terrace, FL	Fort Myers, FL 33902-2549	West Palm Beach, FL 33401
850-595-8360	904-807-3300	407-894-7555	813-632-7600	239-332-6975	561-681-6600

Utilities
Recycling
3333 Lena Road
Bradenton, FL 34211
Phone: (941) 748-5543
www.mymanatee.org/recycling

July 12, 2018

Mr. Steve Tafuni
Florida Department of Environmental Protection
Southwest District
13051 North Telecom Parkway
Temple Terrace, Florida 33637-0926

RE: Lena Road Landfill Quarterly Waste Tire Processing Facility Report
Third Quarter 2018
Waste Tire Permit #126654-004-WT/02

Dear Mr. Steve Tafuni

Enclosed is the above referenced report for the period of April 1, 2018 to June 30, 2018. The supporting reports are generated from the Lena Road Landfill Scalehouse. Only pertinent information from the reports is included in the waste tire report. This data includes Tires In, Tires Out, and Illegal Dumping – Tires. They are defined as follows:

- Tires In: Tires delivered to the Landfill by the general public.
- Tires Out: Tires which are removed from the waste tire storage area by the County's contracted vendor for processing.
- Illegal Dumping – Tires: Tires that are illegally dumped within Manatee County then subsequently picked up and delivered to the Landfill by various public agencies.

All tires delivered to the Landfill are stockpiled and subsequently removed from the site by a contracted vendor. No processing or consumption of tires occurs at the Landfill. Therefore, processed, adjusted and consumed tires have been recorded as zero. All other tire categories have been entered where appropriate. All tires recorded for this report are considered used tires.

If you should have any questions or need additional information, please feel free to call me at 941-748-5543, ext. 8016.

Sincerely,

Anthony Detweiler
Landfill Operations Maintenance Supervisor

Enc. 1

cc: Mike Gore, Director, Utilities Department
Robert Shankle, Solid Waste Division Manager
Bryan White, Landfill Superintendent
Daniel R. Cooper, P.E., Project Director, SCS Engineers

PRISCILLA TRACE * CHARLES B. SMITH * STEPHEN JONSSON * ROBIN DiSABATINO * VANESSA BAUGH * CAROL WHITMORE * BETSY BENAC
District 1 District 2 District 3 District 4 District 5 District 6 District 7

Florida Department of Environmental Protection

Bob Martinez Center
2600 Blair Stone Road
Tallahassee, Florida 32399-2400

DEP Form # 62-701.900(21)

Form Title: Waste Tire Processing Facility Quarterly Report

Effective Date: January 6, 2010

DEP Application No. _____
(Completed by DEP)

WASTE TIRE PROCESSING FACILITY QUARTERLY REPORT

Pursuant to Rule 62-711.530, Florida Administrative Code, the owner or operator of a waste tire processing facility shall submit the following information to the Department quarterly.

Quarter covered by this report Third Quarter 2018 (First quarter begins on January 1 of any given year)

1. Facility name: Manatee County Solid Waste Management Facility - Manatee County Utilities Department
2. Facility mailing address: 3333 Lena Road

   City: Bradenton County: Manatee Zip: 34211
3. Facility permit number: 126654-004-WT/02
4. Facility telephone number ( ) 941-748-5543 x8016
5. Authorized person preparing report: Anthony Detweiler
6. Affiliation with facility: Landfill Operations Maintenance Supervisor
7. Telephone number (if different from above): ( )
8. Activity: Report in tons

	Beginning Inventory	Received	Processed	Consumed	Removed	Adjustments	Ending Inventory
Used Tires	623.47	498.04			403.09		718.42
Other Whole Tires							
Processed Tires							
Processing Waste							
Other							
Total	623.47	498.04			403.09		718.42

a. Explain all inventory adjustments.

b. List any period in which one or more category of inventory exceeded the permitted maximum for that category. How was that condition relieved?

For any excess inventory at the end of the quarter, state how and when this condition will be relieved. Attach Additional sheets, if necessary.

9. Certification: To the best of my knowledge and belief, I certify the information provided in this report is true, accurate, and complete.

Anthony Detweiler, Landfill Operations Supervisor		July 12, 2018
Print Name of Authorized Agent	Signature of Authorized Agent	Date

Mail completed form to the appropriate District office listed below

Northwest District	Northeast District	Central District	Southwest District	South District	Southeast District
160 Government Center	7825 Baymeadows Way, Ste. 200 B	3319 Maguire Blvd., Ste. 232	13051 N. Telecom Pky.	2295 Victoria Ave., Ste. 364	400 North Congress Ave.
Pensacola, FL 32501-5794	Jacksonville, FL 32256-7590	Orlando, FL 32803-3767	Temple Terrace, FL	Fort Myers, FL 33902-2549	West Palm Beach, FL 33401
850-595-8360	904-807-3300	407-894-7555	813-632-7600	239-332-6975	561-681-6600

Utilities
Recycling
3333 Lena Road
Bradenton, FL 34211
Phone: (941) 748-5543
www.mymanatee.org/recycling

October 9, 2018

Mr. Steve Tafuni
Florida Department of Environmental Protection
Southwest District
13051 North Telecom Parkway
Temple Terrace, Florida 33637-0926

RE: Lena Road Landfill Quarterly Waste Tire Processing Facility Report
Fourth Quarter 2018
Waste Tire Permit #126654-004-WT/02

Dear Mr. Steve Tafuni

Enclosed is the above referenced report for the period of July 1, 2018 to September 30, 2018. The supporting reports are generated from the Lena Road Landfill Scalehouse. Only pertinent information from the reports is included in the waste tire report. This data includes Tires In, Tires Out, and Illegal Dumping – Tires. They are defined as follows:

- Tires In: Tires delivered to the Landfill by the general public.
- Tires Out: Tires which are removed from the waste tire storage area by the County's contracted vendor for processing.
- Illegal Dumping – Tires: Tires that are illegally dumped within Manatee County then subsequently picked up and delivered to the Landfill by various public agencies.

All tires delivered to the Landfill are stockpiled and subsequently removed from the site by a contracted vendor. No processing or consumption of tires occurs at the Landfill. Therefore, processed, adjusted and consumed tires have been recorded as zero. All other tire categories have been entered where appropriate. All tires recorded for this report are considered used tires.

If you should have any questions or need additional information, please feel free to call me at 941-748-5543, ext. 8016.

Sincerely,

Anthony Detweiler
Landfill Operations Maintenance Supervisor

Enc. 1

cc: Mike Gore, Director, Utilities Department
Robert Shankle, Solid Waste Division Manager
Bryan White, Landfill Superintendent
Daniel R. Cooper, P.E., Project Director, SCS Engineers

PRISCILLA TRACE * CHARLES B. SMITH * STEPHEN JONSSON * ROBIN DiSABATINO * VANESSA BAUGH * CAROL WHITMORE * BETSY BENAC
District 1 District 2 District 3 District 4 District 5 District 6 District 7

Florida Department of Environmental Protection

Bob Martinez Center
2600 Blair Stone Road
Tallahassee, Florida 32399-2400

DEP Form # 62-701.900(21)

Form Title: Waste Tire Processing Facility Quarterly Report

Effective Date: January 6, 2010

DEP Application No. _____
(Completed by DEP)

WASTE TIRE PROCESSING FACILITY QUARTERLY REPORT

Pursuant to Rule 62-711.530, Florida Administrative Code, the owner or operator of a waste tire processing facility shall submit the following information to the Department quarterly.

Quarter covered by this report Fourth Quarter 2018 (First quarter begins on January 1 of any given year)

1. Facility name: Manatee County Solid Waste Management Facility - Manatee County Utilities Department
2. Facility mailing address: 3333 Lena Road

   City: Bradenton County: Manatee Zip: 34211
3. Facility permit number: 126654-004-WT/02
4. Facility telephone number ( ) 941-748-5543 x8016
5. Authorized person preparing report: Anthony Detweiler
6. Affiliation with facility: Landfill Operations Maintenance Supervisor
7. Telephone number (if different from above): ( )
8. Activity: Report in tons

	Beginning Inventory	Received	Processed	Consumed	Removed	Adjustments	Ending Inventory
Used Tires	718.42	468.21			400.02		786.61
Other Whole Tires							
Processed Tires							
Processing Waste							
Other							
Total	718.42	468.21			400.02		786.61

a. Explain all inventory adjustments.

b. List any period in which one or more category of inventory exceeded the permitted maximum for that category. How was that condition relieved?

For any excess inventory at the end of the quarter, state how and when this condition will be relieved. Attach Additional sheets, if necessary.

9. Certification: To the best of my knowledge and belief, I certify the information provided in this report is true, accurate, and complete.

Anthony Detweiler, Landfill Operations Supervisor		October 9, 2018
Print Name of Authorized Agent	Signature of Authorized Agent	Date

Mail completed form to the appropriate District office listed below

Northwest District	Northeast District	Central District	Southwest District	South District	Southeast District
160 Government Center	7825 Baymeadows Way, Ste. 200 B	3319 Maguire Blvd., Ste. 232	13051 N. Telecom Pky.	2295 Victoria Ave., Ste. 364	400 North Congress Ave.
Pensacola, FL 32501-5794	Jacksonville, FL 32256-7590	Orlando, FL 32803-3767	Temple Terrace, FL	Fort Myers, FL 33902-2549	West Palm Beach, FL 33401
850-595-8360	904-807-3300	407-894-7555	813-632-7600	239-332-6975	561-681-6600