Steve

SARASOTA COUNTY
"Dedicated to Quality Service"

Dept. of Environmental Protection

APR 06 2010

Southwest District

March 31, 2010

Susan Pelz, P.E.
Solid Waste Department
Florida Department of Environmental Protection
13051 North Telecom Parkway
Temple Terrace, FL 33637-0926

Re: Leachate Tank Inspection Report
Central County Solid Waste Disposal Complex (CCSWDC)
Class I Landfill Permit No. 130542-002-SO/01; Condition C.8.c.8.c
Sarasota County

Dear Ms Pelz:

Please find the enclosed Leachate Tank Inspection Report as required by Specific Condition C.8.c.8.c of Permit 130542-002-SO/01. Crom Engineering and Construction Services (CECS) inspected the storage tank as well as the secondary containment tank on March 1, 2010.

The inspection did not reveal any major problems that would cause concern for the structural integrity of the tank, but a few minor issues have been brought to the County's attention. These items are outlined on page 4 of the report but do not require remedial actions at this time. Sarasota County intends to regularly monitor the tank during our daily inspections and take necessary actions if required.

If you have any questions, please do not hesitate to contact Lois Rose directly at (941) 861-1589, cell (941) 650-0722, or e-mail at lerose@scgov.net.

Sincerely,

Lora Ross

Lora Ross
Business Professional

Enclosures

CECS INCORPORATED

TANK INSPECTION REPORT

Sarasota County Government
Central County Solid Waste Disposal Complex
1.8-MG Leachate Storage Tank
Sarasota, Florida

CECS Job No. 2010-S-014

March 1, 2010

FLORIDA DEPARTMENT OF ENVIRONMENTAL PROTECTION
APR - 6 2010
SOUTHWEST DISTRICT
TAMPA

CECS INCORPORATED

Crom Engineering & Construction Services, Inc.

Irvin C. Rubin, P.E.
General Manager

Dept. of Environmental Protection
APR 06 2010
Southwest District

TANK INSPECTION REPORT

1.0 Executive Summary

Crom Engineering and Construction Services, Inc (CECS) conducted an inspection of the 1,800,000-gallon prestressed concrete leachate storage tank as well as the 2,100,000-gallon secondary containment tank in Sarasota, Florida on March 1, 2010. The goal of the inspection was to review the status of the tank and its structural integrity, and to determine what measures, if any, are necessary to bring the tank up to present codes and standards so that the longest useful life of the tank can be realized.. Irvin C. Rubin, CECS General Manager, performed the inspection and prepared this report.

The tank is in good structural condition at this time; however several issues were discovered by the inspector. Numerous blisters were noted in the elastomeric urethane boot installed at the floor-wall joint of the leachate storage tank (Figure 27). Minor superifical covercoat shrinkage cracking was noted on the exterior wall of the secondary containment tank (Figure 11).

The complete findings from the tank inspection are detailed in Section 5.0 *Conclusions and Recommendations.*

2.0 Scope of Work

The purpose of the inspection is to investigate the structural integrity of the 1,800,000-gallon presressted concrete leachate storage tank as well as the 2,100,000-gallon secondary containment tank. The investigation included the interior and exterior walls of the tanks, floors and tank accessories. The inspection was a visual survey of the structure with no invasive procedures employed.

The tank was inspected in accordance with AWWA D110 and ACI 350 to evaluate the present condition of the tank structure.

The tank was cleaned prior to the interior inspection. CECS used an ambient air monitor to test the quality of air within the tank prior to entry.

The tank was physically examined for any visible problems such as leaks or cracks, any location that was questionable, was looked at closer to determine the extent of the problem.

The wall was observed for any deterioration, cracking, spalled concrete, and signs of corrosion or any indicators of existing problems such as efflorescence or damp spots. The walls were "sound tested" to determine if there was any

evidence of the covercoat separating from the core wall. Any location of this was noted and mapped as part of the field notes of the inspector.

Tank accessories were looked at to determine the extent of the weathering of the fiberglass and the condition of the bolts, and fasteners. All penetrations were checked for signs of leakage into the tank. All areas of concern were noted and mapped in the inspector's field notes.

The tank was drained and CECS personnel entered the tank interior. The interior wall was observed for cracking, spalled concrete, and signs of corrosion, or other indications of existing problems. Piping and internal accessories were checked for corrosion and condition of their supports, bolts, and anchors.

The tank was fully surveyed and a record was made of all observations. Photographs were taken as an additional record of the inspection.

3.0 Tank History and Description

The tank being inspected is a prestressed concrete leachate storage tank that was originally built by The Crom Corporation in 1997. The leachate storage tank has an inside diameter of 100'-0" and a side wall depth of 30'-8". The secondary containment tank has an inside diameter of 130'-0" and a side wall depth of 21'-2". The tank was built for Sarasota County in conformance with generally accepted design practices for wire-wound prestressed concrete tanks during this time period.

The inner tank has a 5" thick highly reinforced concrete membrane floor. Floor steel on the inner tank consists of one orthogonal mat of #4 rebar spaced at 6" in both directions. The tank floor is joined to the tank wall with a monolithic connection.

The outer tank has a 4" thick highly reinforced concrete membrane floor. Floor steel on the outer tank consists of one orthogonal mat of #4 rebar spaced at 8" in both directions. The tank floor is joined to the tank wall with a monolithic connection.

The leachate tank has a composite wall constructed of shotcrete encasing a 26 gauge steel shell diaphragm continuous for the full height. The vertical seams between the sheets of the diaphragm are sealed watertight with epoxy. The wall is circumferentially prestressed by wrapping with pre-tensioned high tensile steel wire permanently bonded to the tank wall to contain the internal hydraulic load of the tank contents and provide residual compression in the wall after allowing for wall deformation and stress loss in the wire.

Dept. of Environmental Protection
APR 06 2010
Southwest District

Conventional mild steel reinforcement is also present in the wall due to vertical bending moments induced by the prestressing and by seasonal temperature differential between the inside and the outside of the wall. Circumferential mild steel reinforcement to control shrinkage cracking during construction is present in the wall as well. There is a 1" thick minimum shotcrete covercoat over the final layer of prestressed wire to protect the wire from corrosion. There is also a 1" thick covercoat on the inside of the diaphragm. The core wall is 6 inches at the base of the wall and tapers to 3 ½ inches at the top. Three layers of prestressing wires at the bottom of the tank and the 1" thick covercoat provide an overall thickness of approximately 7 1/4" at the bottom of the wall tapering to 4½" at the top.

There are four pipe penetrations through the outer wall as follows:

- 8" DIP outer tank drain line
- 6" DIP leachate influent line
- 2" Copper line
- 6" SS discharge line – installed in 2009

There is one pipe penetration through the wall of the inner tank as follows:

- 8" Inner tank drain line

Tank accessories include a stainless steel wall manhole and frame (one per tank) and a fiberglass liquid level indicator with open top frame for inner tank.

4.0 Field Investigation

See attached *Field Inspection Report*.

5.0 Conclusions and Recommendations

The inspection of the 1,800,000-gallon leachate storage tank in Sarasota, Florida has been carried out in accordance with AWWA D110. The inspection of the prestressed composite tank at this location did not reveal any apparent problems that would cause concern for the structural integrity of the tank itself. However, there are items that should be addressed in order to avoid the possibility of future problems.

(1) **Condition of the elastomeric urethane floor-wall boot:** An elastomeric urethane coating has been installed in the past at the floor-wall joint of the leachate storage tank (Figure 27). Numerous blisters were noted in the coating in various locations. No signs of leakage were noted from the leachate storage tank into the secondary containment reservoir. CECS recommends regular monitoring of the leachate tank for any leaks into the secondary containment reservoir. No further remedial action recommended at this time.

(2) **Condition of the exterior secondary containment tank wall:** CECS noted numerous locations of minor superficial covercoat shrinkage cracking on the exterior wall of the containment reservoir. These cracks are superficial and pose no structural concern at this time. No remedial action is necessary at this time.

(3) **Condition of the interior tank piping:** Minor corrosion was noted on the interior leachate influent riser (Figure 25) and 8" inner tank drain line. The coating on both pipes is in fair condition at this time. CECS recommends inspecting the pipes during the next routine inspection. No remedial action is necessary at this time.

Since CECS' inspection was a visual survey of the structure without any invasive or destructive procedures or tests, CECS cannot offer an opinion on the condition or performance of the covered or hidden elements of the structure not visible from the surface.

The preceding report is submitted for your review and discussion. We would be pleased to discuss the results with you. If you have any questions or concerns, please do not hesitate to contact us.

Respectfully submitted,

Crom Engineering and Construction Services, Inc.

MARCH 16, 2010

Irvin C. Rubin, P.E.
General Manager

Figure 1 – 1.8 MG leachate storage tank with 2.1 MG secondary containment – inspected in Sarasota County, FL

Figure 2 – Tank was built by The Crom Corporation – Supt Wade Holloway and crew – 1997.

Figure 3 – The inner tank was cleaned by CECS personnel prior to the visual inspection – vacuum trucks were provided by Sarasota County for sludge disposal.

Figure 4 –Approximately 6 to 8 inches of sludge covered the inner tank floor prior to cleaning.

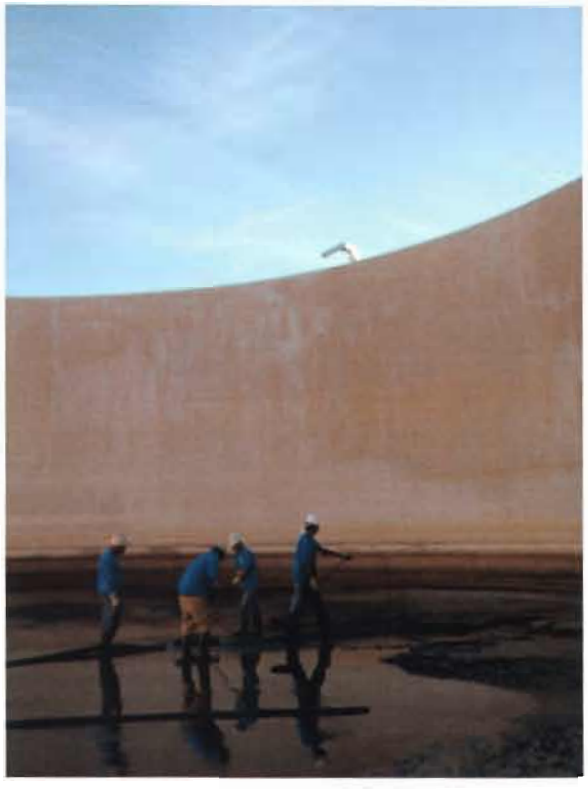

Figure 5 – CECS crew cleaning the tank floor.

Figure 6 – View of the manhole access to the inner and outer tanks.

Figure 7 – View of 6" SS discharge line wall penetration installed by CECS in April 2009 – no leaks or defects noted.

Figure 8 –View of 6" DIP leachate influent line wall penetration – no leaks or defects noted.

Figure 9 – View of tank drain line wall penetrations in outer tank wall – no leaks or defects noted.

Figure 10 – CECS inspected all three inspection platforms and stairs – no defects noted.

Figure 11 – Minor superficial covercoat cracking was noted on the exterior wall of the secondary containment tank.

Figure 12 – View of the south inspection platform.

Figure 13 – View of the interior of secondary containment tank.

Figure 14 –View of the aluminum ladder access to the secondary containment.

Figure 15 – View of the 8" outer tank drain line and sump.

Figure 16 – The drain line piping in the secondary containment area is in good condition.

Figure 17 – Ladder access to the leachate storage tank – ladder is in good condition.

Figure 18 – The leachate tank storage level indicator is operational and in good condition.

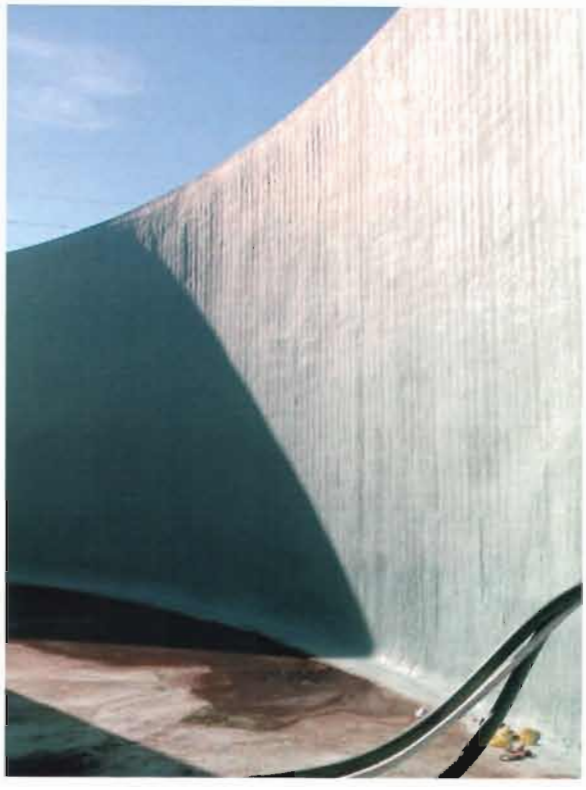

Figure 19 – No significant defects were noted on the interior side of the outer tank wall.

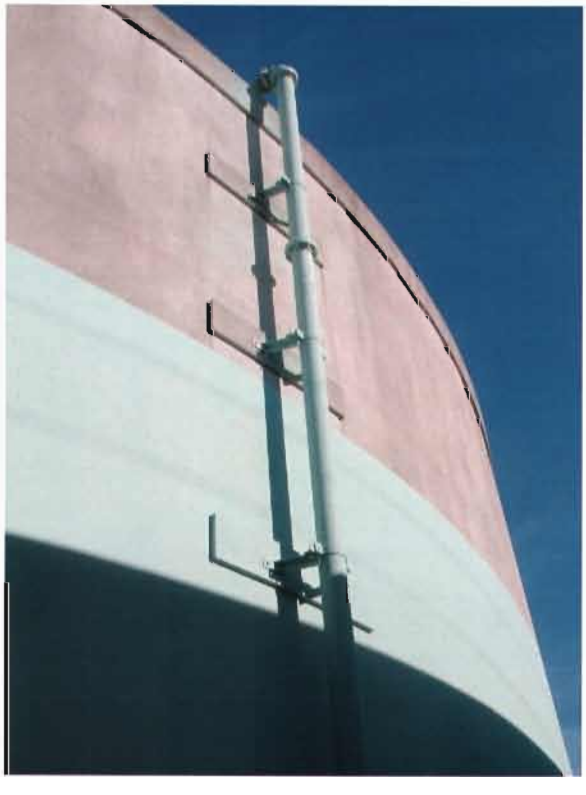

Figure 20 – View of the leachate influent line pipe brackets and boss connections to the wall.

Figure 21 – View of the discharge line wall connections installed in April 2009.

Figure 22 – View of the level indicators on the interior of the leachate tank.

Figure 23 – No defects were noted on the interior leachate storage tank wall.

Figure 24 – View of the stainless nozzle on the recently installed discharge line.

Figure 25 – The leachate influent line is in good condition – very minor corrosion noted.

Figure 26 – View of the 8" inner tank drain and sump.

Figure 27 – View of the tank floor after cleaning. CECS noted numerous blisters in the elastomeric urethane coating at the floor-wall joint.

APPENDIX

CROM ENGINEERING AND CONSTRUCTION SERVICES, INC.
6801 SW Archer Road
Gainesville, FL 32608
352.548.3349 - FAX 352.548.3449

Date: March 1st, 2010
Old Crom Job No.: 9736

TANK DETAILS

Location	Sarasota County Central County Solid Waste Disposal Complex		
Owner	Sarasota County, FL		
Engineer	Camp Dresser & McKee Inc. of Sarasota, FL		
Diameter (ft)	100.00	**Side Wall Depth**	21.00
Volume	1.8 MG	**Dome/Open Top**	Open Top
Inspector(s)	Irvin C. Rubin, P.E.	**Material of Const.**	Prestressed Concrete

		Yes	No	Comments/Photos
FOUNDATION				
1	Is the tank backfilled?	x		**2 to 3 Inches**
2	Differential backfill?		x	
3	Does the footer appear to be level?			**Not applicable - footer not visible**
4	Are there any gaps between the wall and the footer?			**Not applicable - footer not visible**
5	Is the footer undermined anywhere?		x	
6	Is there a berm or sidewalk, splash pads?		x	

Additional Comments:

No visible defects noted with tank foundation.

		Yes	No	Comments/Photos
PIPING				
1	Is there a separate inlet and outlet pipe?	x		
2	Are the inlet & outlet pipes located to ensure circulation?			**Not applicable - tank stores leachate**
3	Does the tank have a drain line?	x		
4	Does the tank have an overflow line?		x	
5	Does the overflow discharge above ground to an open basin or pad terminating with a flap valve or screen?			**Not applicable**
6	Can the tank be isolated from the system and drained?	x		
7	Can the tank be by-passed for maintenance?	x		

Additional Comments:

Minor corrosion was noted on the leachate influent line.

		Yes	No	Comments/Photos
FLOOR				
1	Has the tank floor been cleaned?	x		
2	Waterstop type			**Monolithic floor-wall connection**
3	Floor/wall connection visible?	x		
4	Are there any visible cracks on the floor?		x	
5	Are there any rough spots or spalls on the floor?		x	
6	Any accessories or equipment mounted on the floor?	x		**Level indicator hardware**
7	Is the floor coated? Type of paint?	x		**Floor-wall joint coated**
8	Are there any sumps?	x		**Drain sump in each reservoir**

Additional Comments:

An elastomeric urethane coating has been installed at the floor-wall joint. Blisters were noted in numerous locations in the coating.

		Yes	No	Comments/Photos
EXTERIOR WALL OF SECONDARY CONTAINMENT RESERVOIR				
1	Are there any cracks?	x		**Minor superficial covercoat shrinkage cracking**
2	Are there spalled areas?		x	
3	Are there any exposed prestressing wires?		x	
4	Is the wall painted? Type of paint?	x		**One coat Thoroseal**
5	Are there any hollows?		x	
6	Are there any stains on the wall?		x	

Additional Comments:

Minor covercoat shrinkage cracking noted on the exterior wall of the secondary containment tank (Figure 11).

		Yes	No	Comments/Photos
INTERIOR WALL OF SECONDARY CONTAINMENT RESERVOIR				
1	Are there any hollows?		x	
2	Are there any cracks?		x	**No significant cracking noted**
3	Are there stains on the wall?		x	
4	Was the wall coated? (Condition)	x		**Paint coating in good condition**

Additional Comments:

No significant defects noted on the interior wall of the secondary containment tank.

		Yes	No	Comments/Photos
EXTERIOR WALL OF LEACHATE STORAGE RESERVOIR				
1	Are there any cracks?		x	
2	Are there spalled areas?		x	
3	Are there any exposed prestressing wires?		x	
4	Is the wall painted?	x		**Paint coating in good condition**
5	Are there any hollows?		x	
6	Are there any stains on the wall?		x	

Additional Comments:

No defects noted on the exterior wall of the leachate storage tank.

		Yes	No	Comments/Photos
INTERIOR WALL OF LEACHATE STORAGE RESERVOIR				
1	Are there any hollows?		x	
2	Are there any cracks?	x		**Typical**
3	Are there stains on the wall?	x		**Minor staining from leachate**
4	Was the wall coated? (Condition)		x	

Additional Comments:

No defects noted with the interior wall of the leachate storage tank.

		Yes	No	Comments/Photos
ACCESSORIES				
1	Ladder Access	x		**(2) ladders and (3) stairs - no defects noted**
	Safety climb device?	x		
2	Dome Handrail		x	**Not applicable**
3	Manhole	x		**SS manhole frame and cover in both tank walls**
4	Liquid level indicator	x		**Operational**
5	Hatch cover		x	**Not applicable**
	Raised curb and cover with overhang?		x	
6	Overflows		x	**Not applicable**
	Screened, protected from rain?		x	
7	Center vent / ventilators		x	**Not applicable**
	Screened, protected from rain?		x	
8	Dome probes with curbs?		x	
9	Aerator (size)		x	
10	Specials		x	

Additional Comments:

		Yes	No	Comments/Photos
SITE SECURITY				
1	Is there a fence around the facility with lockable gate?	x		
2	Are access hatches locked?			**Not applicable**
3	Are exterior ladders made inaccessible to intruders			**Not applicable**
4	Is the site remote (no on-site office)?		x	
5	Is the site well maintained?	x		
6	Are there physical features that could damage the tank?		x	
7	Potential sanitary hazards? Proximity?		x	
	(i.e. bird droppings, sewers, standing water, animal activity)			

Additional Comments:

PLAN VIEW DIAGRAM

Inner Diameter: 100.00 ft
Circumference: 314.16 ft

Volume of Tank: 1.6 MG

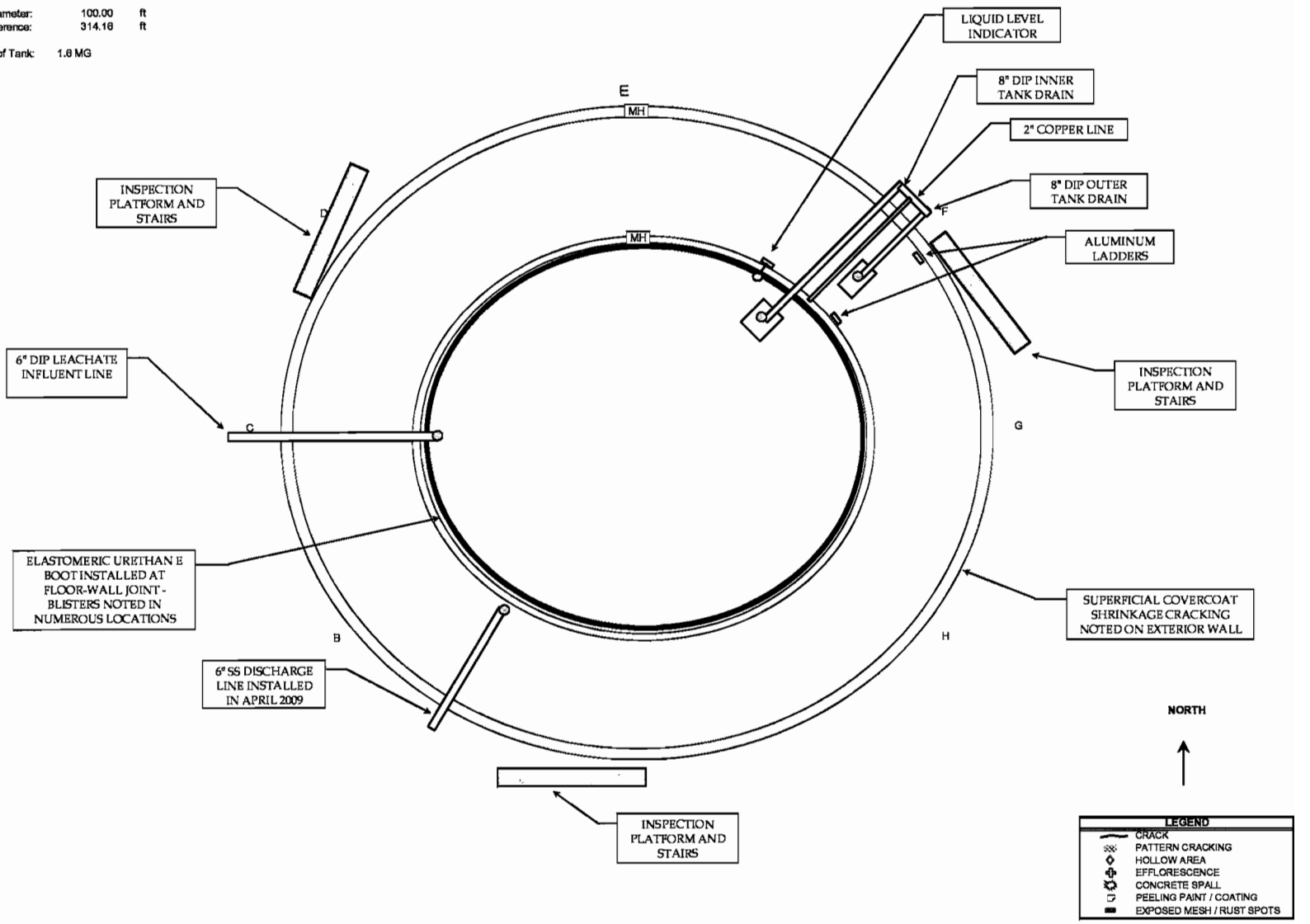

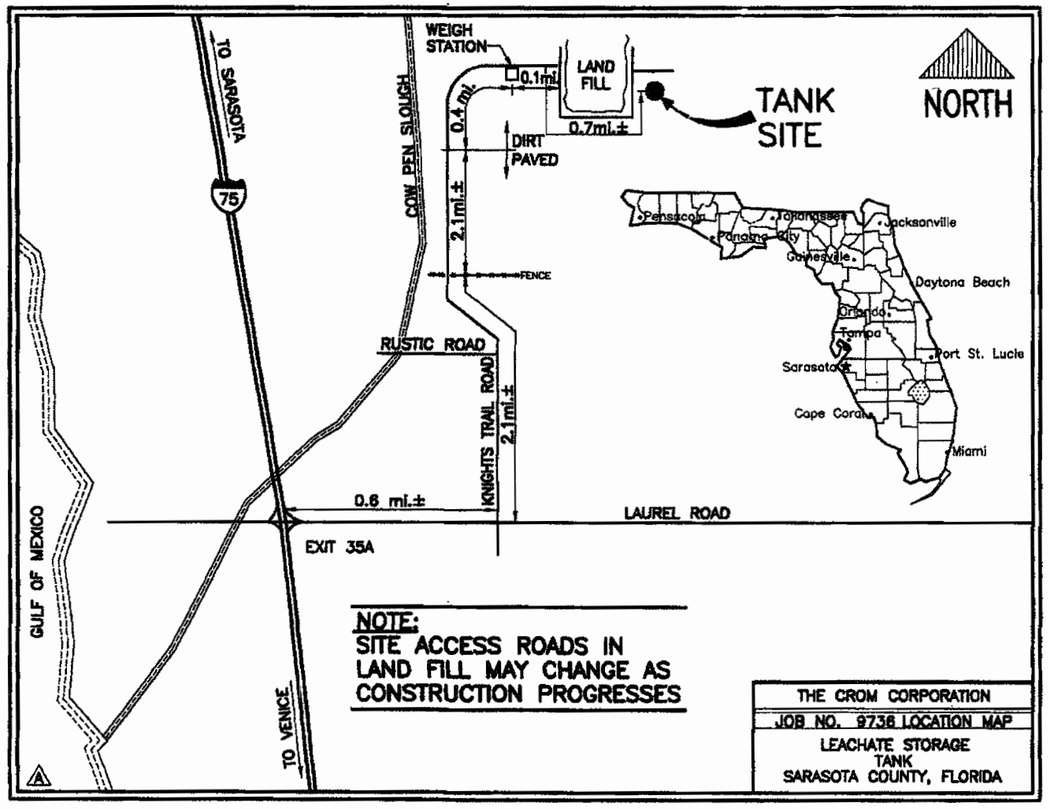

TABLE OF CONTENTS

1. TITLE SHEET
2. PLAN
3. SECTION & NOTES
4. TYPICAL WALL DETAILS & PRESTRESSING SCHEDULE FOR INNER TANK
5. TYPICAL WALL DETAILS & PRESTRESSING SCHEDULE FOR OUTER TANK
6. RING WALL SUPPORT, STAINLESS STEEL WALL MANHOLE AND LEAK DETECTION PIPE
7. 8" DIP OUTER TANK DRAIN, 8" DIP INNER TANK DRAIN, CONC. PIPE SUPPORT AND CONC. PIPE SUPPORT PAD
8. PIPE BRACKETS AND 6"/8" DIP FM
9. SS WALL PIPES AND FIBERGLASS LIQUID LEVEL INDICATOR
10. INNER TANK DRAIN SUMP
11. OUTER TANK DRAIN SUMP

FLORIDA DEPARTMENT OF ENVIRONMENTAL PROTECTION

APR - 6 2010

SOUTHWEST DISTRICT TAMPA

LEACHATE STORAGE TANK

PROJECT: CENTRAL COUNTY SOLID WASTE DISPOSAL COMPLEX LEACHATE STORAGE FACILITY

OWNER: SARASOTA COUNTY, FLORIDA

CONSULTING ENGINEER: CAMP DRESSER & McKEE INC. SARASOTA, FLORIDA

THE CROM CORPORATION
Prestressed Composite Tanks

REV	COMMENTS	DATE
A	REVISED SHEETS 1, 2 & 9 JLW	6/13/97
B	REVISED SHEETS 1, 2, 3, 6, 7 & 10	2/5/98

Revisions are designated by a letter following the FILE NUMBER. UPPER CASE letters indicate APPROVED distribution.

DATE: 5/8/97
DRAWN: AB
CHECKED: JW
APPROVED: JSW
DESIGNED:

FILE NUMBER: 9736B

SHEET 1 OF 11

COPYRIGHT © 1997 BY THE CROM CORPORATION--ALL RIGHTS RESERVED

C:\JLN\sarasota

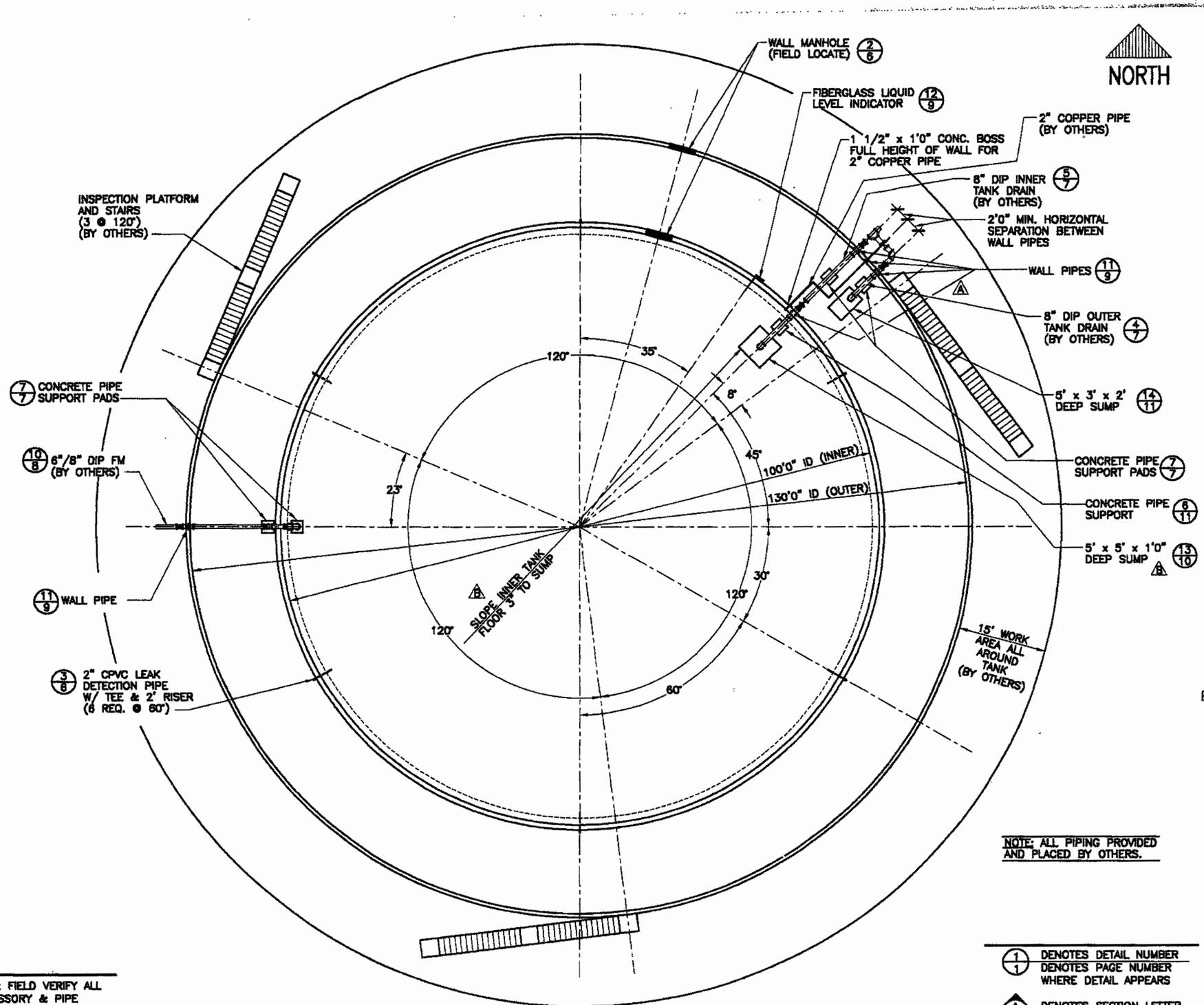

NOTE: ALL PIPING PROVIDED AND PLACED BY OTHERS.

NOTE: FIELD VERIFY ALL ACCESSORY & PIPE LOCATIONS WITH ENGINEER PRIOR TO PLACEMENT.

1/1 DENOTES DETAIL NUMBER
DENOTES PAGE NUMBER WHERE DETAIL APPEARS

A/1 DENOTES SECTION LETTER
DENOTES PAGE NUMBER WHERE SECTION APPEARS

PLAN

COPYRIGHT © 1997 BY THE CROM CORPORATION—ALL RIGHTS RESERVED

CROM

DATE: 5/8/97
DRAWN: AB
CHECKED: JW
APPROVED: JSW
DESIGNED: CDS

TANK DESCRIPTION:
LEACHATE STORAGE TANK

TANK DIMENSIONS:
130'0" x 21'2 1/2" SWD OUTER
100'0" ID x 30'8" SWD INNER

TANK BUILDER:
THE CROM CORPORATION
GAINESVILLE, FLORIDA

OWNER:
SARASOTA COUNTY
CENTRAL COUNTY
SOLID WASTE
DISPOSAL COMPLEX

CONSULTING ENGINEER:
CAMP DRESSER & McKEE INC.
SARASOTA, FLORIDA

REV.	DESCRIPTION	DATE CK. BY
A	ADDED LEADER	6-13-97
B	AS BUILT	2-4-98

FLORIDA DEPARTMENT OF ENVIRONMENTAL PROTECTION
APR - 6 2010
SOUTHWEST DISTRICT
TAMPA

WHERE STANDARD SPECIFICATIONS ARE IN CONFLICT WITH CROM CORPORATION SPECIFICATIONS OR WITH GOOD PRE-STRESSING OR SHOTCRETE PRACTICES THE STANDARD SPECIFICATIONS SHALL BE SUBORDINATED.
THIS DESIGN AND DRAWING ORIGINATED BY AND THE EXCLUSIVE PROPERTY OF THE CROM CORPORATION.

BAR IS ONE INCH ON ORIGINAL DRAWINGS 0 — 1"

SCALE: 2' 0 5' 10'
3/32"=1'0"

FILE NO. 9736B

SHEET 2 OF 11

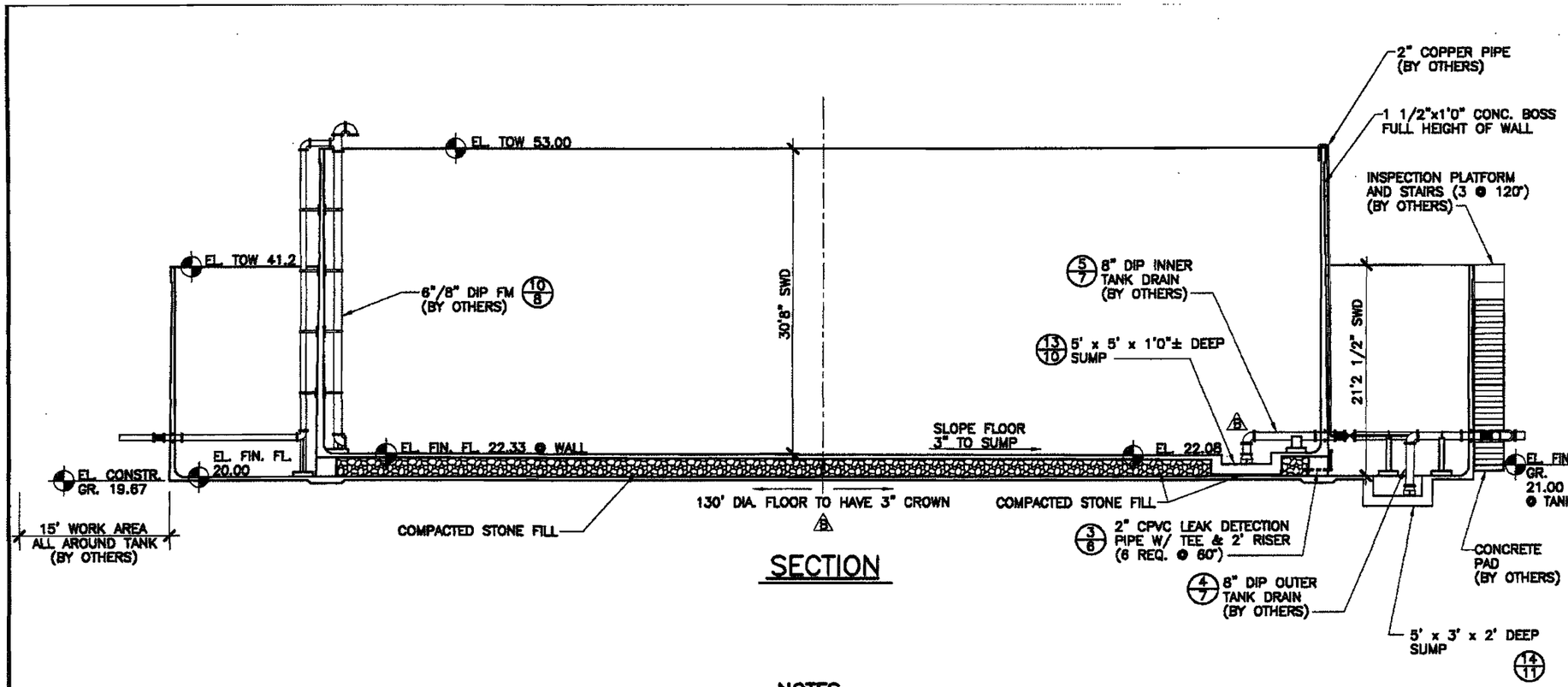

SECTION

NOTES

Material & Services By the General Contractor:

1. Clearing of the site, excavation, fill, compaction to an elevation 4" below top of floor slab for the outer tank on a 160' diameter circle.
2. Dewatering of the 160' diameter work area if required.
3. Furnish adequate working and open storage space for construction equipment and materials.
4. Water and electricity for construction.
5. Testing and monitoring of tanks.
6. Final backfill and landscaping.
7. Provide and place all piping in and outside the tanks, with the exception of the wall pipes listed below.
8. All mechanical, electrical and instrumentation equipment.
9. Provide and install aluminum stairs and inspection platforms, including concrete pads.

Materials & Services Furnished By The Crom Corporation:

A. Concrete: Use Type II Cement.
   1. 4000 psi with 3/4" aggregate for floor.

B. Shotcrete Mixes: Use Type II Cement. f'_c = 4000 psi
   Inner tank f_{ci} = 1700 psi
   Outer tank f_{ci} = 1681 psi
   1. Pump mix with 7 1/2 bags cement minimum.

C. Material Testing: (Paid by Owner)
   1. Concrete: (4 cylinders per set) Test one at 7 days, two at 28 days, and hold one.
      A. 2 sets for floors (each tank).
   2. Shotcrete: (4 cylinders per set) Test one at 7 days, two at 28 days, and hold one.
      A. 2 sets for outside core wall. (each tank)
      B. 2 sets for inside core wall. (each tank)
      C. 2 sets for cover coat. (each tank)

D. Curing:
   1. Floor and walls to be water-cured during tank construction

E. Reinforcing Steel:
   1. ASTM A-615 grade 60, lap 38 diameters
   2. Use 2" bolsters with plate to support floor resteel.

F. Prestressing Wire: Meets ASTM Spec. A821-93 Type B
   1. Aw : 0.0206 square inch (8 gauge)
   2. Dia: 0.1620"
   3. Ultimate strength: 231,000 psi
   4. Initial stress: 145,600 psi
   5. Working stress: 115,000 psi

G. Paint Schedule:
   1. Exterior exposed surfaces:
      Exterior of the secondary containment tank and top 9 feet of the exterior of the primary tank with one coat of Thoroseal.
   2. All other coatings by others.

H. Standard Accessories:
   1. Stainless steel wall manholes, one each tank.
   2. Fiberglass liquid level indicator with open-top frame for inner tank.

I. Special Accessories:
   1. Stainless steel wall pipes for 8" DIP Drains, (3 req.)
   2. Stainless steel wall pipe for 6" DIP FM, 1 req.
   3. Stainless steel wall pipe for 2" copper pipe.
   4. Stainless steel pipe brackets for:
      8" DIP FM, 4 req.
      6" DIP FM, 4 req.
   5. 2" CPVC leak detection pipes, (6 req.)
   6. Concrete pipe supports, (1 req.)
   7. Concrete pipe support pads, (4 req.)

COPYRIGHT © 1997 BY THE CROM CORPORATION—ALL RIGHTS RESERVED

CROM

DATE: 5/8/97
DRAWN: AB
CHECKED: JW
APPROVED: JSW
DESIGNED: BOB

TANK DESCRIPTION: LEACHATE STORAGE TANK

TANK DIMENSIONS: 130'0" x 21'2 1/2" SWD OUTER
100'0" ID x 30'8" SWD INNER

TANK BUILDER: THE CROM CORPORATION GAINESVILLE, FLORIDA

OWNER: SARASOTA COUNTY CENTRAL COUNTY SOLID WASTE DISPOSAL COMPLEX

CONSULTING ENGINEER: CAMP DRESSER & McKEE INC. SARASOTA, FLORIDA

REV.	DESCRIPTION	DATE CK.BY
A	AS BUILT	2-9-98

FLORIDA DEPARTMENT OF ENVIRONMENTAL PROTECTION
APR - 6 2010
SOUTHWEST DISTRICT TAMPA

WHERE STANDARD SPECIFICATIONS ARE IN CONFLICT WITH CROM CORPORATION SPECIFICATIONS OR WITH GOOD PRE-STRESSING OR SHOTCRETE PRACTICES THE STANDARD SPECIFICATIONS SHALL BE SUBORDINATED.
THIS DESIGN AND DRAWING ORIGINATED BY AND THE EXCLUSIVE PROPERTY OF THE CROM CORPORATION.

BAR IS ONE INCH ON ORIGINAL DRAWINGS 0 1"

SCALE: 2' 0 5' 10'
1/8"=1'0"

FILE NO. 9736B

SHEET 3 OF 11

\JLN\sarasota

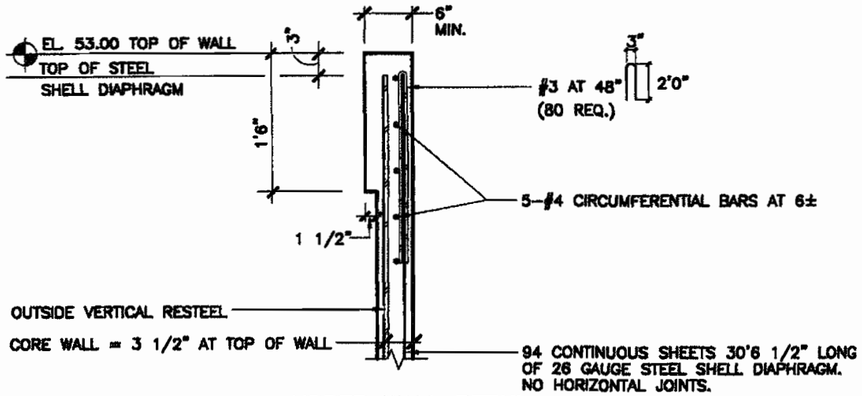

UPPER WALL DETAIL

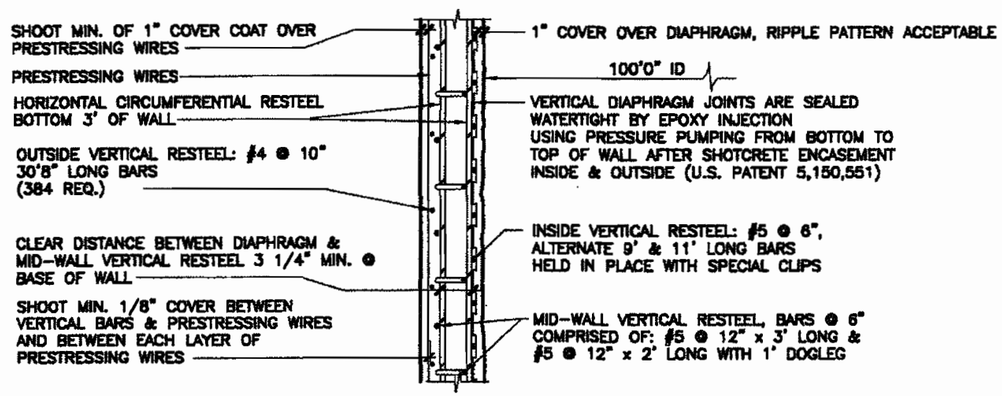

HORIZONTAL WALL SECTION

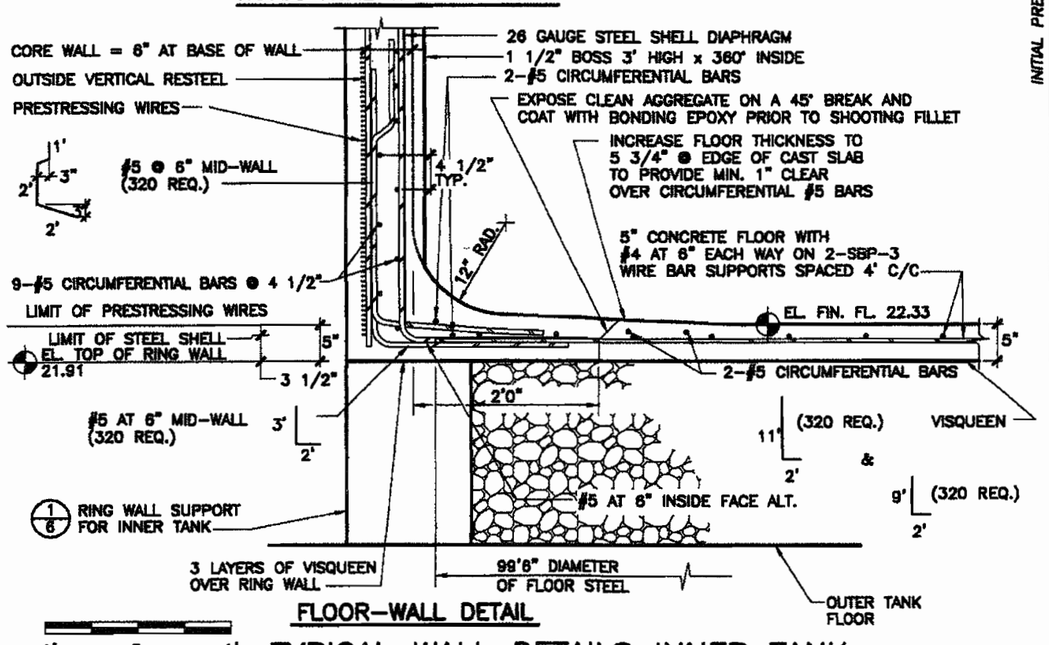

FLOOR-WALL DETAIL

1' 0 1'
1"=1'0"

TYPICAL WALL DETAILS INNER TANK

INITIAL PRESTRESSING FORCE IN POUNDS
51,000
30,000
30,000
30,000
30,000
30,000
30,000
33,000
39,000
42,000
45,000
48,000
54,000
57,000
60,000
66,000
69,000
72,000
78,000
81,000
84,000
90,000
93,000
96,000
138,000
177,000
189,000
162,000

No. OF 8 GAUGE WIRES STRESSED INITIALLY TO 145,600 PSI		
		17
		10
		10
		10
		10
		10
		10
		11
		13
		14
		15
		16
		18
		19
		20
2		20
3		20
4		20
6		20
7		20
8		20
10		20
11		20
12		20
6	20	20
19	20	20
21	21	21
14	20	20

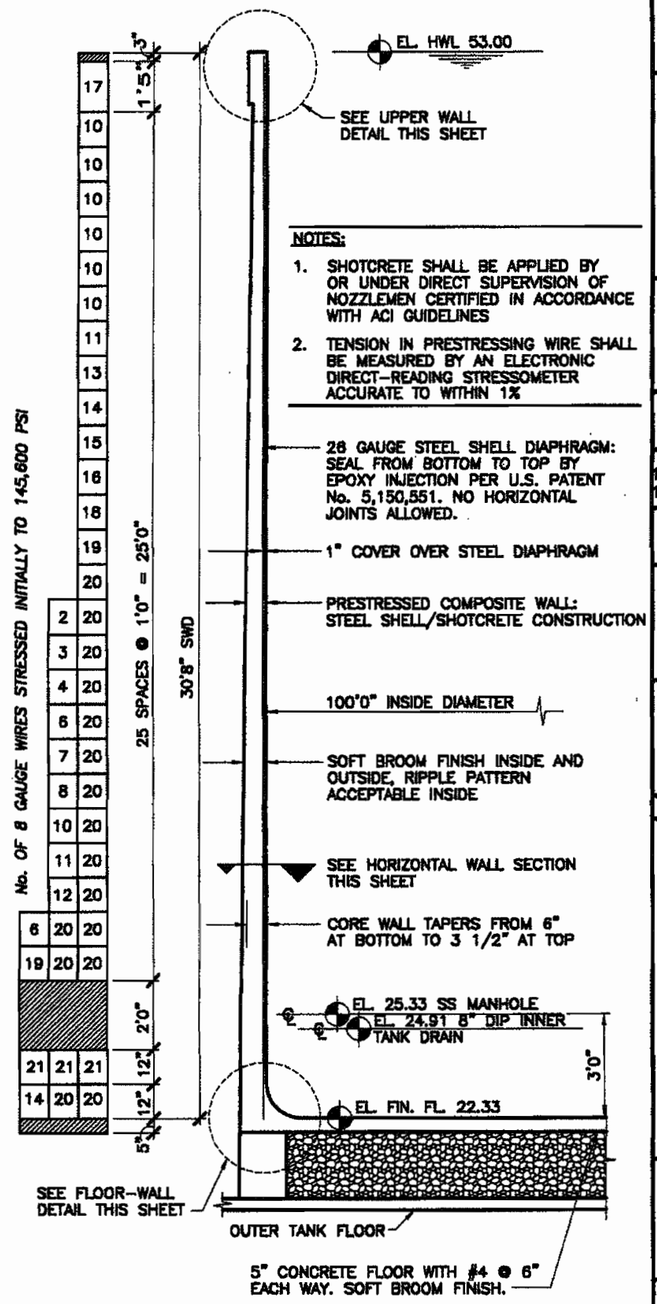

PRESTRESSING SCHEDULE INNER TANK

2' 0 1' 2'
3/8"=1'0"

NOTES:

1. SHOTCRETE SHALL BE APPLIED BY OR UNDER DIRECT SUPERVISION OF NOZZLEMEN CERTIFIED IN ACCORDANCE WITH ACI GUIDELINES
2. TENSION IN PRESTRESSING WIRE SHALL BE MEASURED BY AN ELECTRONIC DIRECT-READING STRESSOMETER ACCURATE TO WITHIN 1%

CROM

DATE: 5-8-97
DRAWN: AB
CHECKED:
APPROVED: JSW
DESIGNED: BOB

TANK DESCRIPTION: LEACHATE STORAGE TANK

TANK DIMENSIONS: 130'0" x 21'2 1/2" SWD OUTER 100'0" ID x 30'8" SWD INNER

TANK BUILDER: THE CROM CORPORATION GAINESVILLE, FLORIDA

OWNER: SARASOTA COUNTY CENTRAL COUNTY SOLID WASTE DISPOSAL COMPLEX

CONSULTING ENGINEER: CAMP DRESSER & McKEE INC. SARASOTA, FLORIDA

REV.	DESCRIPTION	DATE CK-BY

FLORIDA DEPARTMENT OF ENVIRONMENTAL PROTECTION
APR - 6 2010
SOUTHWEST DISTRICT TAMPA

WHERE STANDARD SPECIFICATIONS ARE IN CONFLICT WITH CROM CORPORATION SPECIFICATIONS OR WITH GOOD PRE-STRESSING OR SHOTCRETE PRACTICES THE STANDARD SPECIFICATIONS SHALL BE SUBORDINATED.
THIS DESIGN AND DRAWING ORIGINATED BY AND THE EXCLUSIVE PROPERTY OF THE CROM CORPORATION.

BAR IS ONE INCH ON ORIGINAL DRAWINGS 0 1"

SCALE: AS NOTED

FILE NO. 9736

SHEET 4 OF 11

COPYRIGHT © 1997 BY THE CROM CORPORATION-ALL RIGHTS RESERVED

\ULK\sarasota

NOTES:
1. SHOTCRETE SHALL BE APPLIED BY OR UNDER DIRECT SUPERVISION OF ACI CERTIFIED NOZZLEMEN
2. TENSION IN PRESTRESSING WIRE SHALL BE MEASURED BY AN ELECTRONIC DIRECT-READING STRESSOMETER ACCURATE TO WITHIN 1%

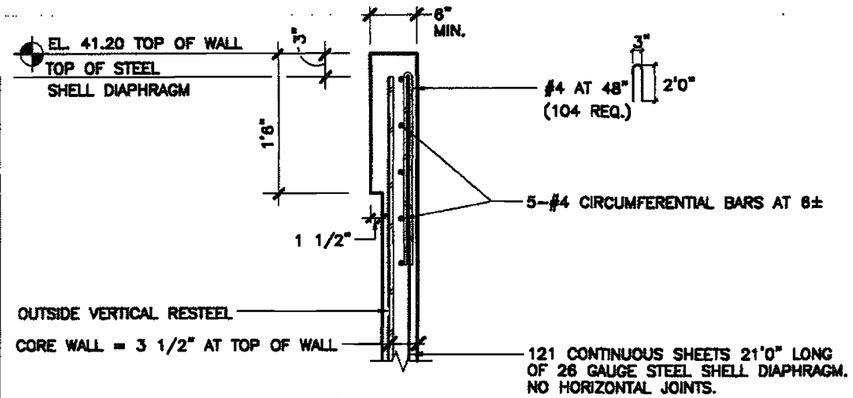

UPPER WALL DETAIL

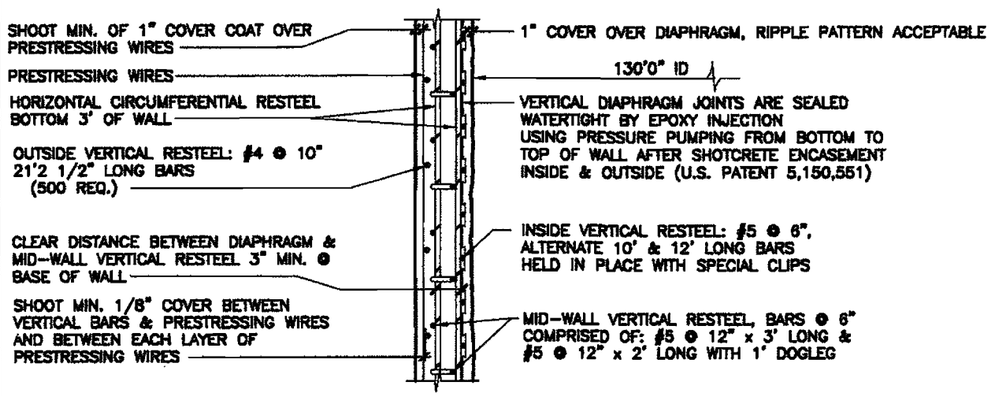

HORIZONTAL WALL SECTION

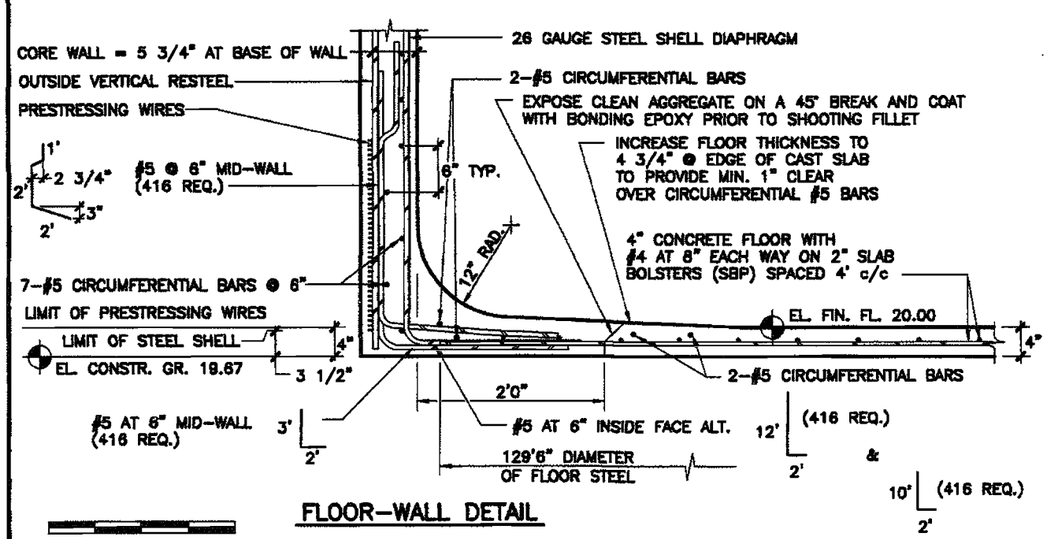

FLOOR-WALL DETAIL

TYPICAL WALL DETAILS OUTER TANK

1' 0 1'
1"=1'0"

INITIAL PRESTRESSING FORCE IN POUNDS	NO. OF 8 GAUGE WIRES STRESSED INITIALLY TO 145,600 PSI		
51,000	17		
30,000	10		
30,000	10		
30,000	10		
30,000	10		
33,000	11		
39,000	13		
42,000	14		
45,000	15		
54,000	18		
60,000	20		
66,000	2	20	
69,000	3	20	
105,000	15	20	
132,000	4	20	20
78,000	6	10	10
144,000	8	20	20
117,000	19	20	
108,000	16	20	

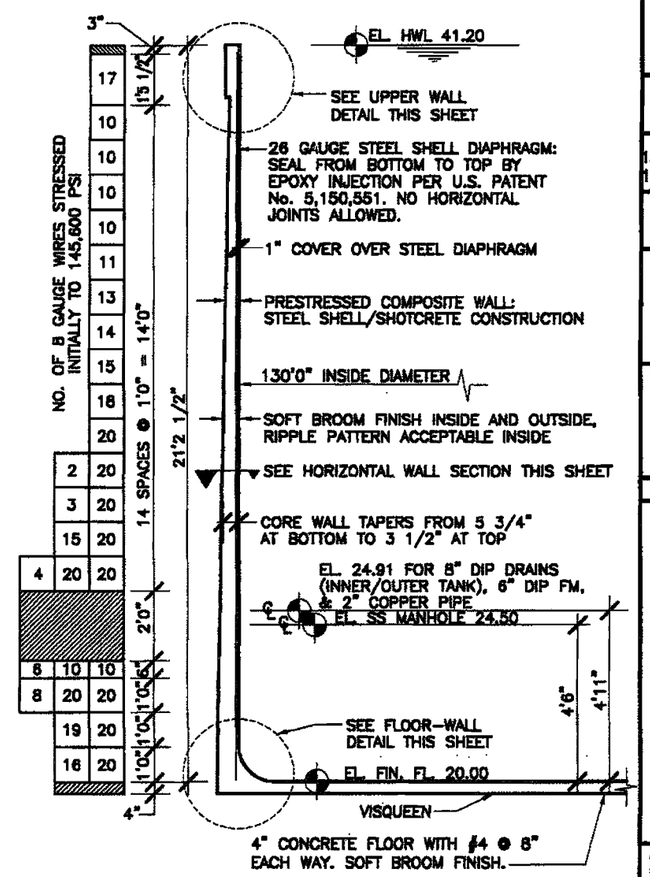

PRESTRESSING SCHEDULE OUTER TANK

2' 0 1' 2'
3/8"=1'0"

COPYRIGHT © 1997 BY THE CROM CORPORATION-ALL RIGHTS RESERVED

CROM

DATE: 5-8-97
DRAWN: AB
CHECKED: JW
APPROVED: JSW
DESIGNED: BOB

TANK DESCRIPTION: LEACHATE STORAGE TANK

TANK DIMENSIONS: 130'0" x 21'2 1/2" SWD OUTER 100'0" ID x 30'8" SWD INNER

TANK BUILDER: THE CROM CORPORATION GAINESVILLE, FLORIDA

OWNER: SARASOTA COUNTY CENTRAL COUNTY SOLID WASTE DISPOSAL COMPLEX

CONSULTING ENGINEER: CAMP DRESSER & McKEE INC. SARASOTA, FLORIDA

REV.	DESCRIPTION	DATE CK.BY

FLORIDA DEPARTMENT OF ENVIRONMENTAL PROTECTION
APR - 6 2010
SOUTHWEST DISTRICT TAMPA

WHERE STANDARD SPECIFICATIONS ARE IN CONFLICT WITH CROM CORPORATION SPECIFICATIONS OR WITH GOOD PRE-STRESSING OR SHOTCRETE PRACTICES THE STANDARD SPECIFICATIONS SHALL BE SUBORDINATED.
THIS DESIGN AND DRAWING ORIGINATED BY AND THE EXCLUSIVE PROPERTY OF THE CROM CORPORATION.

BAR IS ONE INCH ON ORIGINAL DRAWINGS 0 1"

SCALE: AS NOTED

FILE NO. 9736

SHEET 5 OF 11

\JLK\sarasota

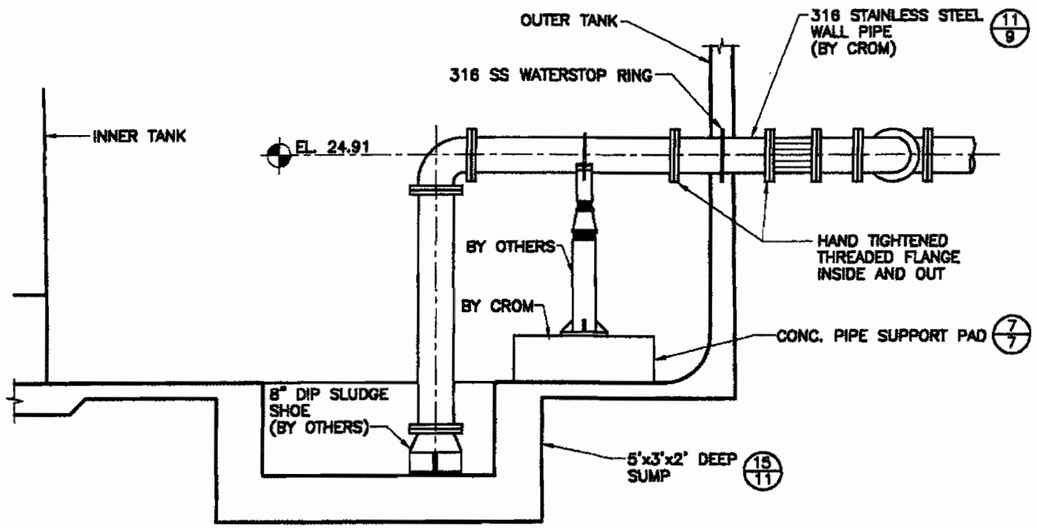

4/— 8" DIP OUTER TANK DRAIN

1/2"=1'0"

1' 0 1' 2'

NOTE: STAINLESS STEEL WALL PIPE PROVIDED AND PLACED BY CROM, ALL OTHER PIPING PROVIDED AND PLACED BY OTHERS.

NOTE: WHEN INSTALLING HAND TIGHT FLANGES, MAKE SURE BOLT HOLES ARE ALIGNED PROPERLY EQUIDISTANT ON EACH SIDE OF VERTICAL.

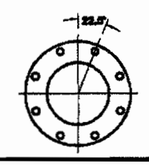

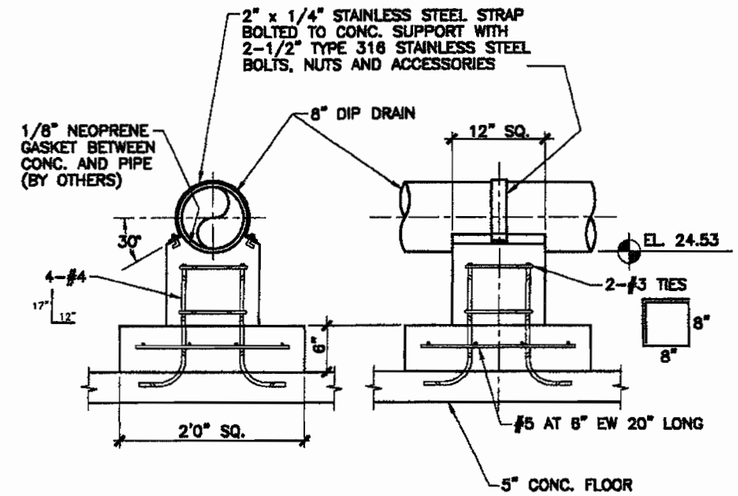

6/— CONC. PIPE SUPPORT (1 REQ.)

1"=1'0"

1' 0 1'

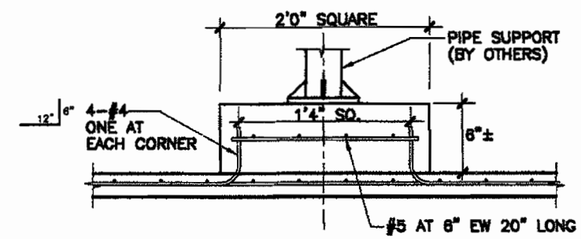

7/— CONC. PIPE SUPPORT PAD (4 REQ.)

NTS

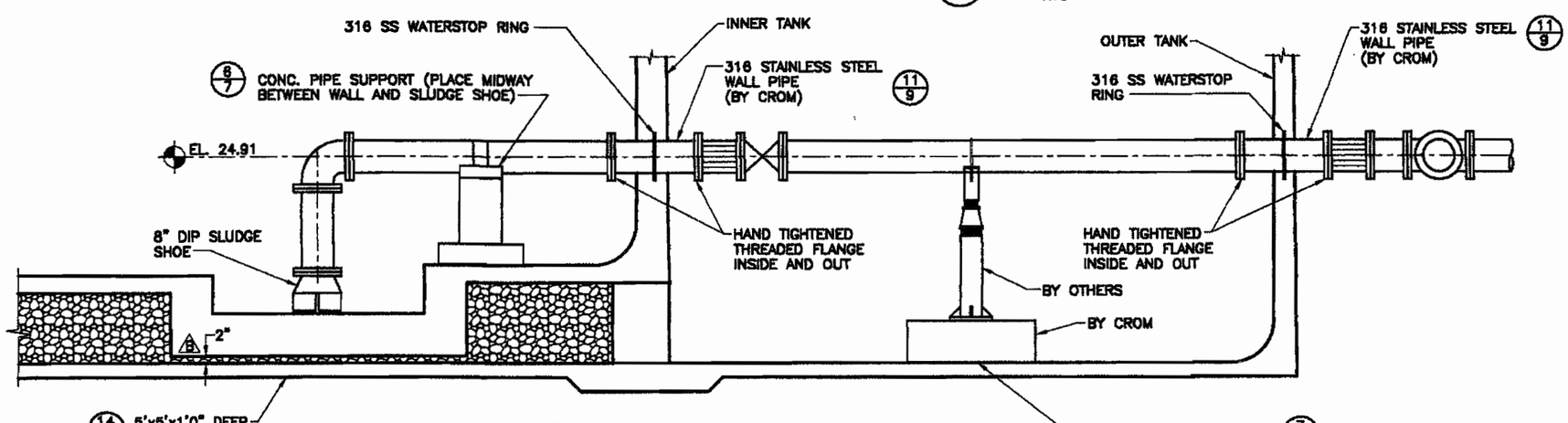

5/— 8" DIP INNER TANK DRAIN

1/2"=1'0"

1' 0 1' 2'

COPYRIGHT © 1997 BY THE CROM CORPORATION-ALL RIGHTS RESERVED

CROM

DATE: 5/8/97
DRAWN: AB
CHECKED: JSW
APPROVED: JSW
DESIGNED: SOB

TANK DESCRIPTION:
LEACHATE STORAGE TANK

TANK DIMENSIONS:
130'0" x 21'2 1/2" SWD OUTER
100'0" ID x 30'8" SWD INNER

TANK BUILDER:
THE CROM CORPORATION
GAINESVILLE, FLORIDA

OWNER:
SARASOTA COUNTY
CENTRAL COUNTY
SOLID WASTE
DISPOSAL COMPLEX

CONSULTING ENGINEER:
CAMP DRESSER & McKEE INC.
SARASOTA, FLORIDA

REV.	DESCRIPTION	DATE CK.BY
B	AS BUILT	2-1-12

FLORIDA DEPARTMENT OF ENVIRONMENTAL PROTECTION
APR - 6 2010
SOUTHWEST DISTRICT TAMPA

WHERE STANDARD SPECIFICATIONS ARE IN CONFLICT WITH CROM CORPORATION SPECIFICATIONS OR WITH GOOD PRE-STRESSING OR SHOTCRETE PRACTICES THE STANDARD SPECIFICATIONS SHALL BE SUBORDINATED.
THIS DESIGN AND DRAWING ORIGINATED BY AND THE EXCLUSIVE PROPERTY OF THE CROM CORPORATION.

BAR IS ONE INCH ON ORIGINAL DRAWINGS 0 1"

SCALE: AS NOTED

FILE NO. 9736B

SHEET 7 OF 11

\JLN\sarasota

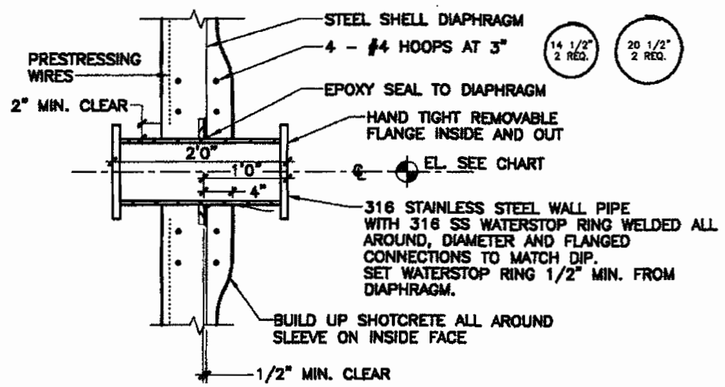

PIPE DESCRP.	℄ EL.	NOTE
8" DIP INNER TANK DRAIN	24.91	FLANGES HAND TIGHT
8" DIP OUTER TANK DRAIN (2 REQ.)	24.91	FLANGES HAND TIGHT
6" DIP FM	24.91	FLANGES HAND TIGHT
2" COPPER PIPE	24.91	THREADED ENDS ONLY

11 SS WALL PIPES FOR 8" DIP INNER AND OUTER TANK DRAINS, 6" DIP FM AND 2" COPPER PIPE

NTS

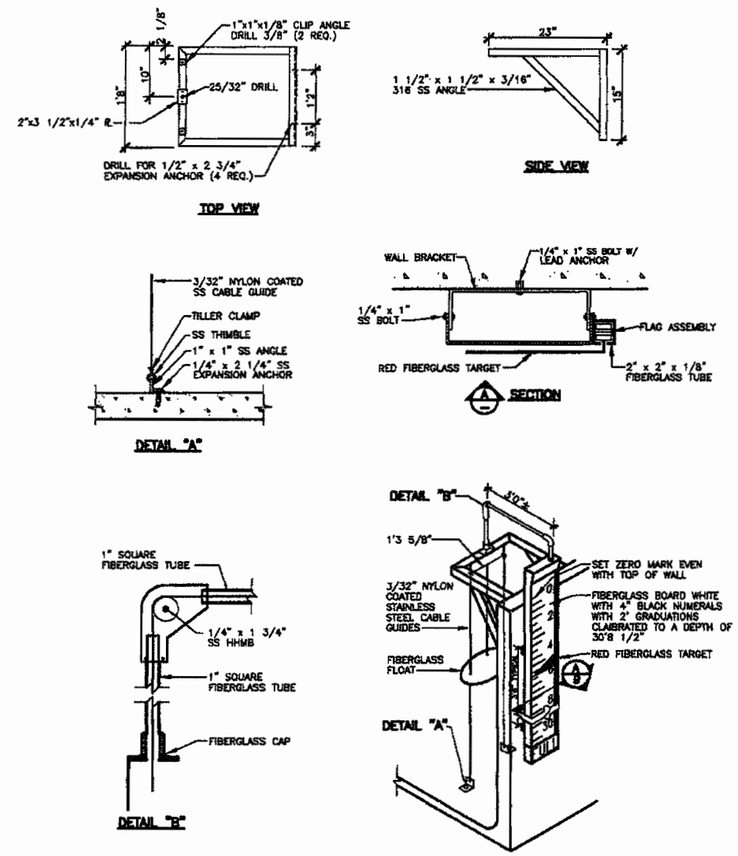

12 FIBERGLASS LIQUID LEVEL INDICATOR

NTS

COPYRIGHT © 1997 BY THE CROM CORPORATION—ALL RIGHTS RESERVED

CROM

DATE: 5/8/97
DRAWN: AB
CHECKED: JW
APPROVED: JSW
DESIGNED: BOB

TANK DESCRIPTION:
LEACHATE STORAGE TANK

TANK DIMENSIONS:
130'0" x 21'2 1/2" SWD OUTER
100'0" ID x 30'8" SWD INNER

TANK BUILDER:
THE CROM CORPORATION
GAINESVILLE, FLORIDA

OWNER:
SARASOTA COUNTY
CENTRAL COUNTY
SOLID WASTE
DISPOSAL COMPLEX

CONSULTING ENGINEER:
CAMP DRESSER & McKEE INC.
SARASOTA, FLORIDA

REV.	DESCRIPTION	DATE CK-BY
A	REVISED PIPE DESCRIPTION	6/11/97

FLORIDA DEPARTMENT OF ENVIRONMENTAL PROTECTION
APR - 6 2010
SOUTHWEST DISTRICT
TAMPA

WHERE STANDARD SPECIFICATIONS ARE IN CONFLICT WITH CROM CORPORATION SPECIFICATIONS OR WITH GOOD PRE-STRESSING OR SHOTCRETE PRACTICES THE STANDARD SPECIFICATIONS SHALL BE SUBORDINATED.
THIS DESIGN AND DRAWING ORIGINATED BY AND THE EXCLUSIVE PROPERTY OF THE CROM CORPORATION.

BAR IS ONE INCH ON ORIGINAL DRAWINGS 0 1"

SCALE: AS NOTED

FILE NO. 9736A

SHEET 9 OF 11

\JL\N\sarasota

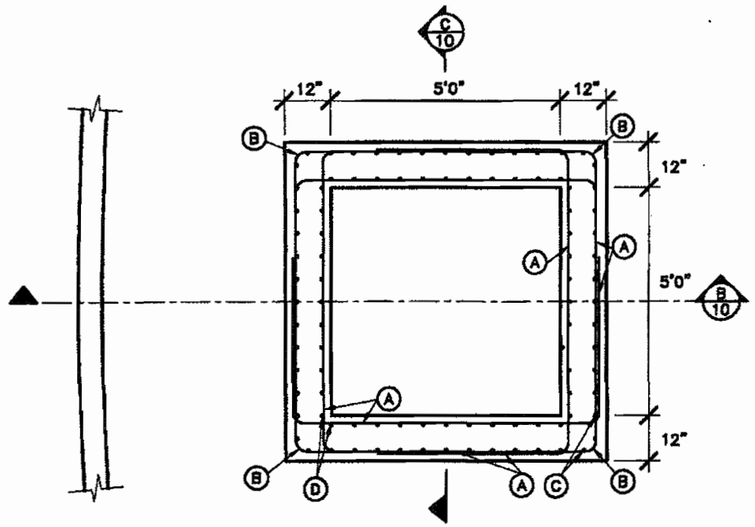

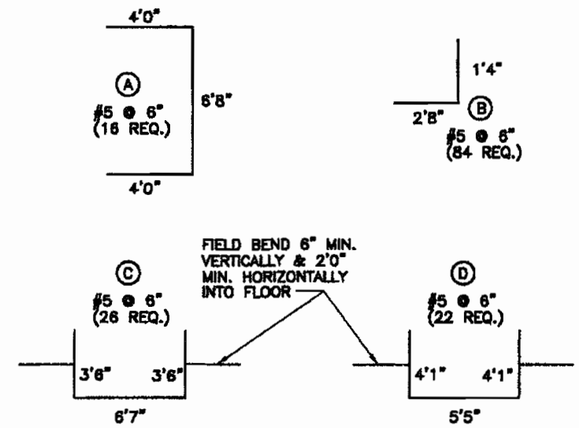

RESTEEL SCHEDULE

NTS

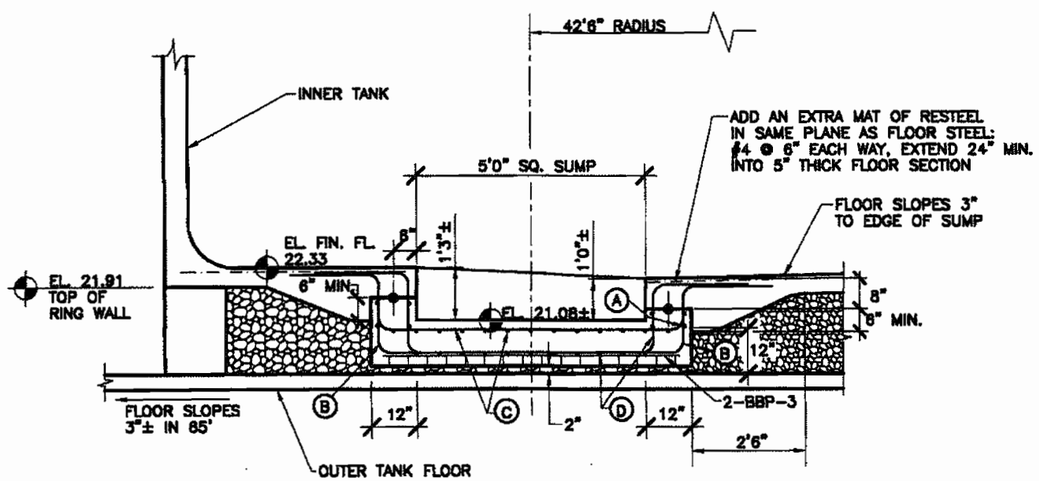

B SECTION

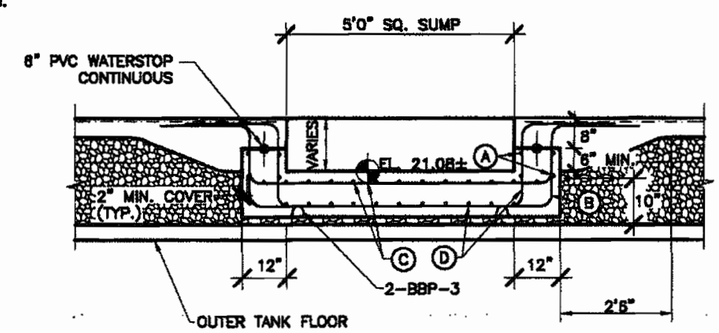

C SECTION

13 5'0" SQ. x 1'0" DEEP INNER TANK DRAIN SUMP

COPYRIGHT © 1997 BY THE CROM CORPORATION—ALL RIGHTS RESERVED

CROM

DATE: 5/8/97
DRAWN: AB
CHECKED: JW
APPROVED: JSW
DESIGNED: SDS

TANK DESCRIPTION:
LEACHATE STORAGE TANK

TANK DIMENSIONS:
130'0" x 21'2 1/2" SWD OUTER
100'0" ID x 30'8" SWD INNER

TANK BUILDER:
THE CROM CORPORATION
GAINESVILLE, FLORIDA

OWNER:
SARASOTA COUNTY
CENTRAL COUNTY
SOLID WASTE
DISPOSAL COMPLEX

CONSULTING ENGINEER:
CAMP DRESSER &
McKEE INC.
SARASOTA, FLORIDA

REV.	DESCRIPTION	DATE CK.BY
B	AS BUILT SDS 4-18	

FLORIDA DEPARTMENT OF ENVIRONMENTAL PROTECTION
APR - 6 2010
SOUTHWEST DISTRICT
TAMPA

WHERE STANDARD SPECIFICATIONS ARE IN CONFLICT WITH CROM CORPORATION SPECIFICATIONS OR WITH GOOD PRE-STRESSING OR SHOTCRETE PRACTICES THE STANDARD SPECIFICATIONS SHALL BE SUBORDINATED.
THIS DESIGN AND DRAWING ORIGINATED BY AND THE EXCLUSIVE PROPERTY OF THE CROM CORPORATION.

BAR IS ONE INCH ON ORIGINAL DRAWINGS 0 1"

SCALE:
1' 0 1' 2'
1/2"=1'0"

FILE NO. 9736B

SHEET 10 OF 11

C:\ULN\sarasota

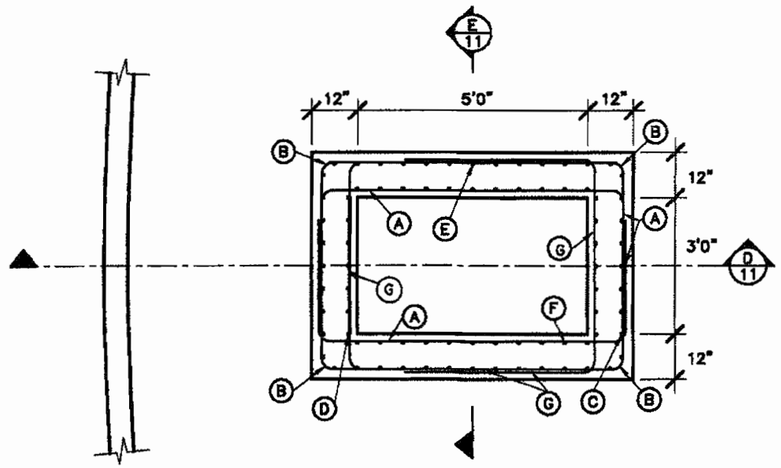

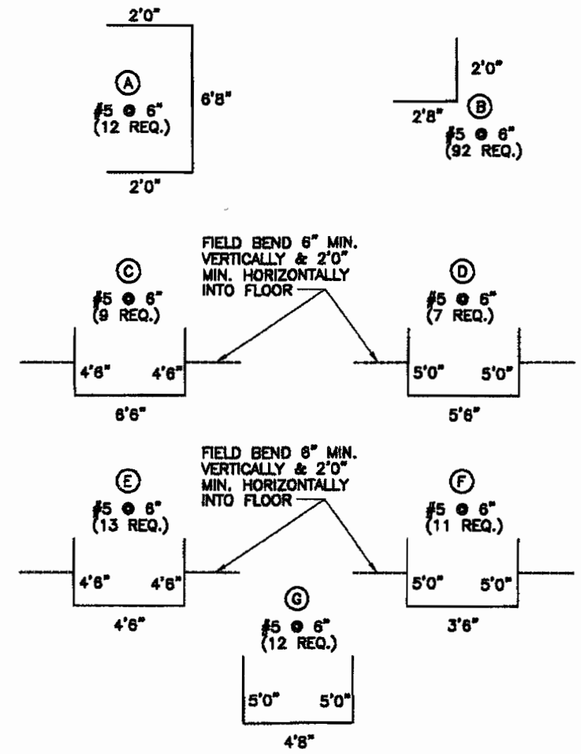

RESTEEL SCHEDULE

NTS

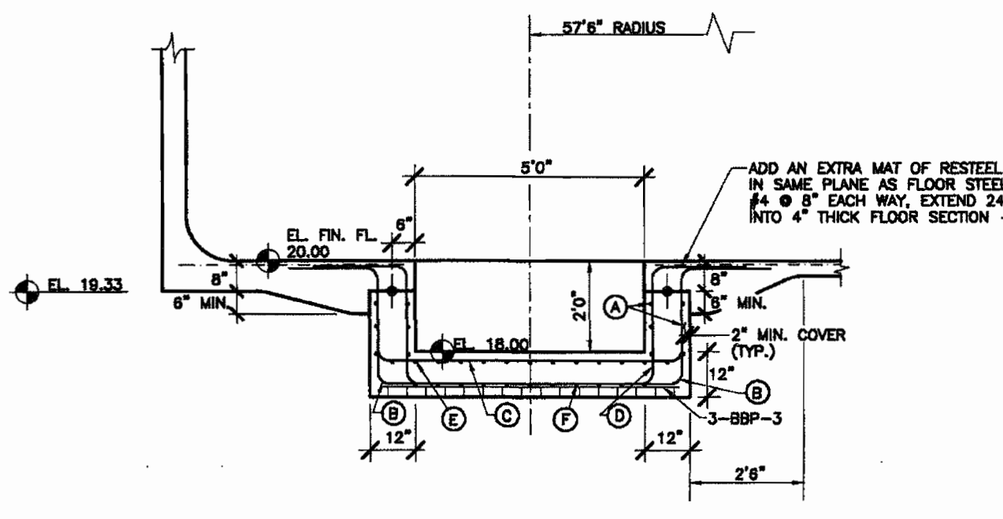

D SECTION

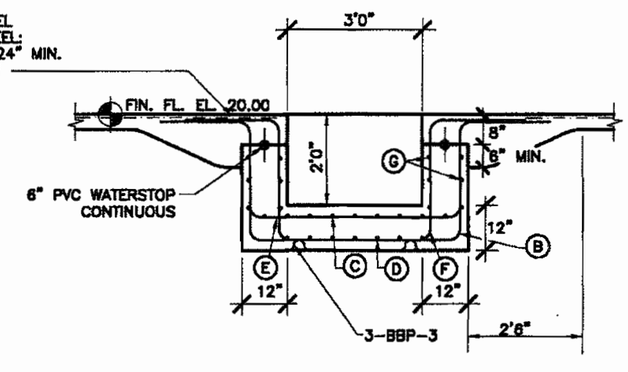

E SECTION

14 5'0" x 3'0" x 2'0" DEEP OUTER TANK DRAIN SUMP

COPYRIGHT © 1997 BY THE CROM CORPORATION-ALL RIGHTS RESERVED

CROM

DATE: 5-8-97
DRAWN: AB
CHECKED: JW
APPROVED: JSW
DESIGNED: SOS

TANK DESCRIPTION:
LEACHATE STORAGE TANK

TANK DIMENSIONS:
130'0" x 21'2 1/2" SWD OUTER
100'0" ID x 30'8" SWD INNER

TANK BUILDER:
THE CROM CORPORATION
GAINESVILLE, FLORIDA

OWNER:
SARASOTA COUNTY
CENTRAL COUNTY
SOLID WASTE
DISPOSAL COMPLEX

CONSULTING ENGINEER:
CAMP DRESSER &
McKEE INC.
SARASOTA, FLORIDA

REV.	DESCRIPTION	DATE CK.BY

FLORIDA DEPARTMENT OF
ENVIRONMENTAL PROTECTION
APR - 6 2010
SOUTHWEST DISTRICT
TAMPA

WHERE STANDARD SPECIFICATIONS ARE IN CONFLICT WITH CROM CORPORATION SPECIFICATIONS OR WITH GOOD PRE-STRESSING OR SHOTCRETE PRACTICES THE STANDARD SPECIFICATIONS SHALL BE SUBORDINATED.
THIS DESIGN AND DRAWING ORIGINATED BY AND THE EXCLUSIVE PROPERTY OF THE CROM CORPORATION.

BAR IS ONE INCH ON ORIGINAL DRAWINGS 0 1"

SCALE:
1' 0 1' 2'
1/2"=1'0"

FILE NO. 9736

SHEET 11 OF 11

\JLN\sarasota