CSR RINKER
1/18/01

Soil Burner CEI

DATE: 1/18/01 TIME: 1:00
WEATHER: Cloudy
LOCATION: Rinker Materials
PHOTO TAKEN BY: WM

Truck wash drain to evaporation pond

1/18/01 1:00
Cloudy
Rubber Materials
WM

Boom inside truck wash
containment

DATE: 4/18/01 TIME: 1:00

WEATHER: Cloudy

LOCATION: Rinker Material

PHOTO TAKEN BY: Wm

Truck wash oil/water separator


Rinker

DATE: 1/18/01 TIME: 1100
WEATHER: Cloudy
LOCATION: Rinker Materials
PHOTO TAKEN: WHM

DATE: 1/18/01 TIME: 1:00
WEATHER: Cloudy
LOCATION: Rinker Materials
PHOTO TAKEN: WHM


Winkler

DATE: _____ TIME: _____
WEATHER: _____
LOCATION: _____
PERSONNEL: _____

1/18/01 1:00
cloudy
Rinker Materials
NM

TIME: _____

DATE: 1/18/01 TIME: 1:00
WEATHER: Cloudy
LOCATION: Rinker Materials
PHOTO TAKEN BY: WMM

Truck wash evaporation pond

CSR Riker - CEE

Truck Wash area

9/29/99


New Line
Transport
How's My Driving?
1-800-228-5521

CSR Rinker - CEI

Truck Wash Area

9/29/99

CSR Rinker - CEI

Truck Wash area
> asphalt visibly pitted / trenched

9/29/99

CSR Rinker - CEI

Truck wash area

→ pH litmus paper indicates levels to be approx 1.5 - 2.0

9/29/99

CSR Rinker - CEI

Truck Maintenace Shop

> Used Oil drum not labeled or seeded properly

9/29/99

BLANK, MEENAN & SMITH, P.A.

ATTORNEYS AT LAW

Office Address:
204 SOUTH MONROE STREET
TALLAHASSEE, FLORIDA 32301
(850) 681-6710

Mailing Address
POST OFFICE BOX 11068
TALLAHASSEE, FLORIDA 32302-3068
FACSIMILE (850) 681-6713
(850) 681-1003
E-Mail: Postmaster@blanklaw.com

F. PHILIP BLANK
H. RICHARD BISBEE
JOHN R. DUNPHY
JEFFREY W. JOSEPH
THOMAS R. McSWAIN
TIMOTHY J. MEENAN
GEOFFREY D. SMITH

LEGAL ASSISTANTS
JOHN A. DICKSON, J.D
STEVEN E. OOLE, J.D.

September 6, 2000

Mr. Jeffrey A. Smith
Department of Environmental Protection
Southeast District
Post Office Box 15425
West Palm Beach, Florida 33416

Re: Rinker Materials: Truck Wash Area Sampling.

Dear Jeff:

Enclosed please find information to respond to your previous request for information to finalize the results of the soil and ground water sampling and analysis for the truck wash area at Rinker's Miami Cement Mill operations. The site diagram indicates the location of the two soil samples for which laboratory results were previously forwarded to you. The location of the existing ground water well is also indicated, together with sample results from the February 1, 2000 sampling event.

This should conclude all actions requested by the Department in relation to this matter. Please let me know if you need any further information.

Sincerely,

Geoffrey D. Smith

GDS/bf

cc: Mike Vardeman
Don Emery

H:\ACTIVE CLIENT FILES\08200 RINKER\82.19 Truck Wash-RCRA Issue\smith-9-6-00-ltr.doc

...mental Services, INC.

COMPAP #950491
DOH #865536

Materials Analysis Report

REPORT DATE	2/10/2000	SAMPLE LOCATION	RINKER
SAMPLE DATE	2/1/2000	REFERENCE #	CH2MHILL
SAMPLE SOURCE	MW-10	R.E.S. NUMBER	13724
SAMPLE TYPE	Well Water		

PARAMETER	RESULT	UNITS	METHOD	D. LIMITS	EXTRACT. DATE	ANALYSIS DATE	ANAL. INITIAL
Benzene	BDL	ug/l	5030/8021	1.0	2/4/2000	2/4/2000	AP
Chlorobenzene	BDL	ug/l	5030/8021	1.0	2/4/2000	2/4/2000	AP
Toluene	BDL	ug/l	5030/8021	1.0	2/4/2000	2/4/2000	AP
Ethylbenzene	BDL	ug/l	5030/8021	1.0	2/4/2000	2/4/2000	AP
Total Xylenes	BDL	ug/l	5030/8021	1.0	2/4/2000	2/4/2000	AP
MTBE	BDL	ug/l	5030/8021	1.0	2/4/2000	2/4/2000	AP
1,2-Dichlorobenzene	BDL	ug/l	5030/8021	1.0	2/4/2000	2/4/2000	AP
1,3-Dichlorobenzene	BDL	ug/l	5030/8021	1.0	2/4/2000	2/4/2000	AP
1,4-Dichlorobenzene	BDL	ug/l	5030/8021	1.0	2/4/2000	2/4/2000	AP
Total BTEX	BDL	ug/l	5030/8021	1.0	2/4/2000	2/4/2000	AP
Arsenic	BDL	ug/l	206.3	0.005	2/4/2000	2/4/2000	AP
Barium	BDL	ug/l	208.2	0.07	2/7/2000	2/7/2000	FJG
Cadmium	BDL	ug/l	213.2	0.001	2/7/2000	2/7/2000	FJG
Chromium	BDL	ug/l	218.2	0.002	2/4/2000	2/4/2000	AP
Mercury	BDL	ug/l	245.1	0.2	2/4/2000	2/4/2000	DC
Lead	BDL	ug/l	239.2	0.004	2/4/2000	2/4/2000	AP
Selenium	BDL	ug/l	270.3	0.01	2/4/2000	2/4/2000	AP
Silver	BDL	ug/l	272.2	0.001	2/7/2000	2/7/2000	FJG
Napthalene	BDL	ug/l	610	1.0	2/9/2000	2/9/2000	AP
2-Methylnaphthelene	BDL	ug/l	610	1.0	2/9/2000	2/9/2000	AP
1-Methylnaphthlene	BDL	ug/l	610	1.0	2/9/2000	2/9/2000	AP
Acenaphthalene	BDL	ug/l	610	1.0	2/9/2000	2/9/2000	AP
Acenaphthene	BDL	ug/l	610	1.0	2/9/2000	2/9/2000	AP
Fluorene	BDL	ug/l	610	1.0	2/9/2000	2/9/2000	AP
Phenanthrene	BDL	ug/l	610	1.0	2/9/2000	2/9/2000	AP
Anthracene	BDL	ug/l	610	1.0	2/9/2000	2/9/2000	AP
Fluorenthene	BDL	ug/l	610	1.0	2/9/2000	2/9/2000	AP
Pyrene	BDL	ug/l	610	1.0	2/9/2000	2/9/2000	AP
Benzo(a)anthracene	BDL	ug/l	610	1.0	2/9/2000	2/9/2000	AP
Chrysene	BDL	ug/l	610	1.0	2/9/2000	2/9/2000	AP
Benzo(b)fluoranthene	BDL	ug/l	610	1.0	2/9/2000	2/9/2000	AP
Benzo(k)fluoranthene	BDL	ug/l	610	1.0	2/9/2000	2/9/2000	AP
Benzo(k)pyrene	BDL	ug/l	610	1.0	2/9/2000	2/9/2000	AP
Dibenzo(a,h)anthracene	BDL	ug/l	610	1.0	2/9/2000	2/9/2000	AP
Indeno(1,2,3-cd)-pyrene	BDL	ug/l	610	1.0	2/9/2000	2/9/2000	AP
Benzo(g,h,i)perylene	BDL	ug/l	610	1.0	2/9/2000	2/9/2000	AP

Juan A. Gonzalez
QA/QC Manager

Clarke / Mooneyng, Walls 02-03-2000

Truck Washing Area (Current)

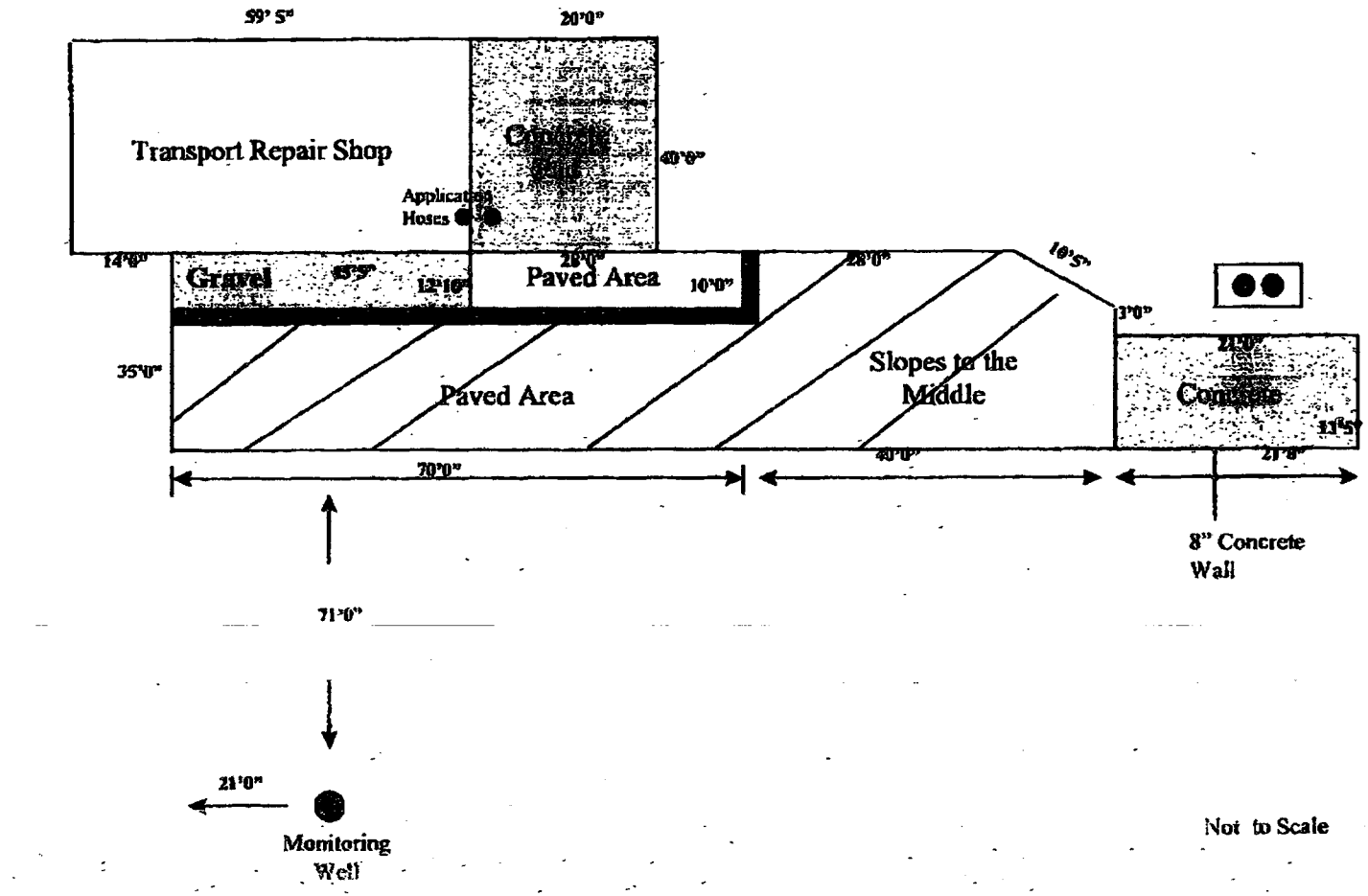

Truck Washing Area
Proposed Sampling and Containment Upgrade

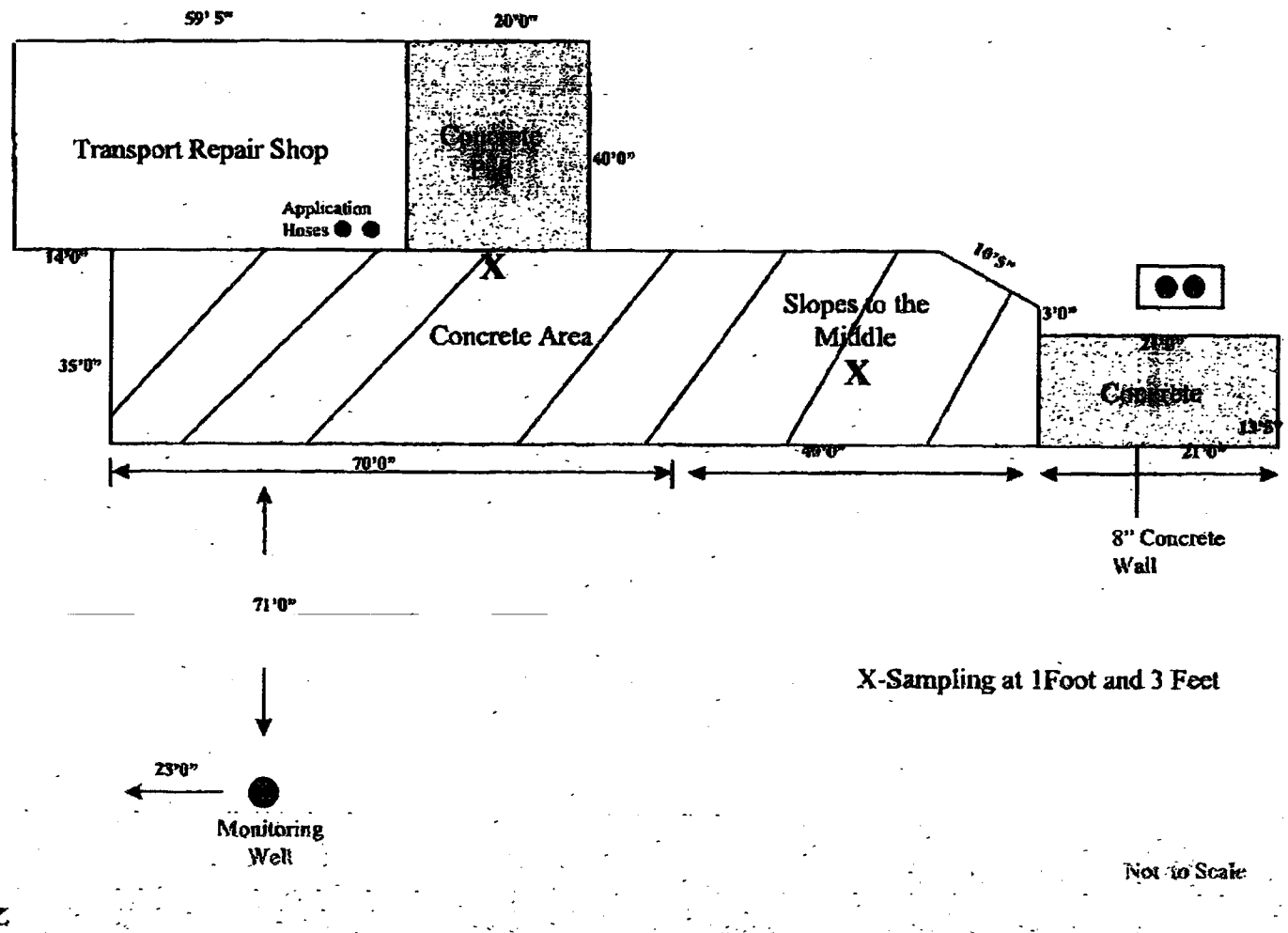

BLANK, RIGSBY & MEENAN, P.A.

ATTORNEYS AT LAW

Office Address:
204 SOUTH MONROE STREET
TALLAHASSEE, FLORIDA 32301
(850) 681-6710

Mailing Address:
POST OFFICE BOX 11068
TALLAHASSEE, FLORIDA 32302-3068
FACSIMILE (850) 681-6713
(850) 681-1003
E-Mail: Postmaster@BRMFirm.com

F. PHILIP BLANK*
H. RICHARD BISBEE
JOHN R. DUNPHY
THOMAS R. McSWAIN
TIMOTHY J. MEENAN
R. TERRY RIGSBY
GEOFFREY D. SMITH

LEGAL ASSISTANTS
JOHN A. DICKSON, J.D.
J. KEVIN KING, J.D.

*Florida Bar Certified in Health Law

April 20, 2000

VIA: Facsimile (561) 681-6600

Mr. Jeffrey A. Smith
Department of Environmental Protection
Southeast District
Post Office Box 15425
West Palm Beach, Florida 33416

RE: Rinker Materials

Dear Jeff:

This will provide you with an update on the status of the pending matters with regard to truck wash operations at the Rinker Materials Corporation facility in Miami. As a result of our meeting on January 11, 2000, DEP requested that soil samples be collected and analyzed for specified parameters. The locations for sampling and the list of parameters were confirmed in my letter to you dated February 4, 2000. The sampling has now been completed. As anticipated, the results do not indicate any contamination of soils in excess of the Department's guidance concentrations (now set forth in Chapter 62-777, F.A.C.). The lab results are enclosed for your review. Please let me know if you have any questions or concerns.

Sincerely,

Geoffrey D. Smith

GDS/meh
Enclosure
cc: Mike Vardeman
Don Emery

H:\ACTIVE CLIENT FILES\08200 Rinker\82.19 Truck Wash-RCRA Issue\smith-4-20-00-ltr.doc

Rinker Environmental Services

Materials Analysis Report

1200 N.W. 137th Avenue
Miami, FL 33182

Telephone (800) 226-7647
(305) 225-1423
Facsimile (305) 220-9875

REPORT DATE	4/10/2000	DATE SAMPLED	
SAMPLE SOURCE	TRUCK WASH AREA	DATE RECEIVED	4/7/2000
SAMPLE LOCATION	MIAMI ,FLORIDA	REFERENCE #	NEW LINE-A-1ft
COLLECTED BY	DON EMERY	R.E.S. NUMBER	13958
SAMPLE TYPE	SOIL	PAGE	Page 1 of 1

PARAMETER	RESULT	UNITS	METHOD	D. LIMITS	ANALYSIS DATE	ANAL. INITIAL
Arsenic	BDL	mg/kg	7060	0.5	4/7/2000	AP
Cadmium	0.06	mg/kg	7131	0.02	4/10/2000	AP
Chromium	7.9	mg/kg	7191	0.8	4/7/2000	AP
Lead	6.1	mg/kg	7421	0.1	4/7/2000	AP
Aluminum	0.273	%	X-RAY		4/7/2000	PEP
Calcium	29.3	%	X-RAY		4/7/2000	PEP
TRH	200	mg/kg	9073	1	4/7/2000	AP
pH	7.55		150.1		4/7/2000	AP

BDL = Below Detection Limits
* Compounds are Screened Only, with an estimated detection limit.
All analyses were performed using EPA, ASTM, USGS, or Standard Methods.
All analyses were performed within EPA holding times unless otherwise noted.
Analyses are reported in dry weight unless otherwise indicated by units.

QAP # 950491 DOH# E86536

Respectfully submitted,

Juan A. Gonzalez
QA/QC Manager

Questions

> Where were samples collected from?
> Why no GW samples?
> Using own lab not a conflict?

Rinker Environmental Services

1200 N.W. 137th Avenue
Miami, FL 33182

Telephone (800) 226-7847
(305) 225-1423
Facsimile (305) 220-9875

Materials Analysis Report

REPORT DATE	4/10/2000	DATE SAMPLED	
SAMPLE SOURCE	TRUCK WASH AREA	DATE RECEIVED	4/7/2000
SAMPLE LOCATION	MIAMI ,FLORIDA	REFERENCE #	NEW LINE-A-3ft
COLLECTED BY	DON EMERY	R.E.S. NUMBER	13959
SAMPLE TYPE	SOIL	PAGE	Page 1 of 1

PARAMETER	RESULT	UNITS	METHOD	D. LIMITS	ANALYSIS DATE	ANAL. INITIAL
Arsenic	BDL	mg/kg	7060	0.5	4/7/2000	AP
Cadmium	0.04	mg/kg	7131	0.02	4/10/2000	AP
Chromium	2.3	mg/kg	7191	0.8	4/7/2000	AP
Lead	3.2	mg/kg	7421	0.1	4/7/2000	AP
Aluminum	0.095	%	X-RAY		4/7/2000	PEP
Calcium	30.5	%	X-RAY		4/7/2000	PEP
TRH	300	mg/kg	9073	1	4/7/2000	AP
pH	7.93		150.1		4/7/2000	AP

BDL = Below Detection Limits
* Compounds are Screened Only, with an estimated detection limit.
All analyses were performed using EPA, ASTM, USGS; or Standard Methods.
All analyses were performed within EPA holding times unless otherwise noted.
Analyses are reported in dry weight unless otherwise indicated by units.

QAP # 950491 DOH# E86536

Respectfully submitted,

Juan A. Gonzalez
QA/QC Manager

RINKER Environmental Services, INC.
CHAIN OF CUSTODY RECORD

SOILS - 04 - 2000

Project Name or Number: TRUCK WASH AREA

Client Name: NEW LINE

Project Location: MIAMI, FL

No. of Samples 2 Page 1 of 1

Project No.:

Disposition: D - R

Date:

Site ID	Date	Time	Grab	Comp	Sample Description	Matrix	Container(s)	601 8010	602 8020	610 8100	TCLP Metals	TX (TRPH)	O&G Flash Pt.	pH	PA Cd, Co, Pb	AL Fe Co		
A-1ft	4/6/00	3:00			Soil	Soil						X		X	X	X		13958
A-3ft	4/6/00	3:40			↓	↓						X		X	X	X		13959

Sampled by (Signature)	Received by (Signature)	Date/Time	Received by (Signature)	Date/Time	Received by Lab (Signature)	Date/Time
Don McEnery	[illegible]	4/7/00				

Sampled by (Print)

Comments:

1200 N.W. 137th Avenue Miami, Florida 33265-0679 (305) 225-1423 FAX (305) 220-9875

Rinker Environmental Services

1200 N.W. 137th Avenue
Miami, FL 33182

Telephone (800) 226-7647
(305) 226-1423
Facsimile (305) 220-9875

Materials Analysis Report

REPORT DATE	4/12/2000	DATE SAMPLED	4/7/2000
SAMPLE SOURCE	4/7/2000	DATE RECEIVED	4/10/2000
SAMPLE LOCATION	TRUCK WASH AREA	REFERENCE #	NEW LINE
COLLECTED BY	DON EMERY	R.E.S. NUMBER	13965
SAMPLE TYPE	SOIL	PAGE	Page 1 of 2

PARAMETER	RESULT	UNITS	METHOD	D. LIMITS	ANALYSIS DATE	ANAL. INITIAL
Arsenic	BDL	mg/kg	7060	0.5	4/10/2000	A.P.
Cadmium	BDL	mg/kg	7131	0.02	4/10/2000	A.P.
Chromium	7.6	mg/kg	7191	0.8	4/10/2000	A.P.
Lead	2	mg/kg	7421	0.1	4/10/2000	A.P.
Aluminum	<0.003	%	X-RAY		4/11/2000	PEP
Calcium	34.2	%	X-RAY		4/11/2000	PEP
TRH	300	mg/kg	9073	1	4/10/2000	AP
pH	9.29		150.1		4/10/2000	AP

BDL = Below Detection Limits
* Compounds are Screened Only, with an estimated detection limit.
All analyses were performed using EPA, ASTM, USGS, or Standard Methods.
All analyses were performed within EPA holding times unless otherwise noted.
Analyses are reported in dry weight unless otherwise indicated by units.

QAP # 930491. DOH# E86536

Respectfully submitted,

Juan A. Gonzalez
QA/QC Manager

Rinker Environmental Services

1200 N.W. 137th Avenue
Miami, FL 33182

Telephone (800) 226-7847
(305) 225-1423
Facsimile (305) 220-9875

Materials Analysis Report

REPORT DATE	4/12/2000	DATE SAMPLED	4/7/2000
SAMPLE SOURCE	TRUCK WASH AREA	DATE RECEIVED	4/10/2000
SAMPLE LOCATION	MIAMI, FL	REFERENCE #	NEW LINE
COLLECTED BY	DON EMERY	R.E.S. NUMBER	13964
SAMPLE TYPE	SOIL	PAGE	Page 1 of 1

PARAMETER	RESULT	UNITS	METHOD	D. LIMITS	ANALYSIS DATE	ANAL. INITIAL
Arsenic	BDL	mg/kg	7060	0.5	4/10/2000	A.P.
Cadmium	0.074	mg/kg	7131	0.02	4/10/2000	A.P.
Chromium	5.6	mg/kg	7191	0.8	4/10/2000	A.P.
Lead	8.8	mg/kg	7421	0.1	4/10/2000	A.P.
Aluminum	0.17	%	X-RAY		4/12/2000	PEP
Calcium	34.06	%	X-RAY		4/12/2000	PEP
TRH	220	mg/kg	9073	1	4/10/2000	AP
pH	9.02		150.1		4/10/2000	AP

BDL = Below Detection Limits

* Compounds are Screened Only, with an estimated detection limit.

All analyses were performed using EPA, ASTM, USGS, or Standard Methods.

All analyses were performed within EPA holding times unless otherwise noted.

Analyses are reported in dry weight unless otherwise indicated by units.

QAP # 950491 DOH# E86636

Respectfully submitted,

Juan A. Gonzalez
QA/QC Manager

RINKER Environmental Services, INC.
CHAIN OF CUSTODY RECORD

Soils - 04 - 2000

APR 19 '00 01:07PM RINKER SUB MIAMI P.7

Project Name or Number	Client Name	Analysis	Project No.:
Truck Wash Area	New Line		
Project Location	**No. of Samples** 2 **Page** 1 **of** 1		**Disposition:** D R
Miami, FL			

Site ID	Date	Time	Grab	Comp	Sample Description	Matrix	Container(s)	601	602	610	8100	TCLP Metals	TX TRPH	O&G	Flash Pt.	Pb	As Ce Tr	Al Ca				Date:
B-1ft	4/7/00	2:50	G		Soil	Soil	1						X		X	X	X	X				13964
B-3ft	4/7/00	3:20	G		↓	↓	1						X		X	X	X	X				13965

Sampled by (Signature)	Received by (Signature)	Date/Time	Received by (Signature)	Date/Time	Received by Lab (Signature)	Date/Time
Ron McEnery						4/10/00 0900

Sampled by (Print)	Comments:

1200 N.W. 137th Avenue Miami, Florida 33265-0679 (305) 225-1423 FAX (305) 220-9875

BLANK, RIGSBY & MEENAN, P.A.

ATTORNEYS AT LAW

Office Address:
204 SOUTH MONROE STREET
TALLAHASSEE, FLORIDA 32301
(850) 681-6710

Mailing Address:
POST OFFICE BOX 11068
TALLAHASSEE, FLORIDA 32302-3068
FACSIMILE (850) 681-6713
(850) 681-1003
E-Mail: Postmaster@BRMFirm.com

F. PHILIP BLANK*
H. RICHARD BISBEE
JOHN R. DUNPHY
THOMAS R. McSWAIN
TIMOTHY J. MEENAN
R. TERRY RIGSBY
GEOFFREY D. SMITH

LEGAL ASSISTANTS
JOHN A. DICKSON, J.D.
J. KEVIN KING, J.D.

*Florida Bar Certified in Health Law

RECEIVED
APR 13 2000
DEPT OF ENV PROTECTION
WEST PALM BEACH

April 11, 2000

VIA: Facsimile (561) 681-6600

Mr. Jeffrey A. Smith
Department of Environmental Protection
Southeast District
Post Office Box 15425
West Palm Beach, Florida 33416

RE: Rinker Materials

Dear Jeff:

This will confirm our discussions regarding issues pertaining to truck wash operations at Rinker's Miami cement mill facility. Based upon the Department's concerns, Rinker ceased using the acid wash product. Rinker will be completing the soil testing you requested and will be completing the upgrade to the truck wash area. We will provide confirmation of the test results, and verification when the upgrade is complete. Please let me know if you have any further questions or concerns.

Sincerely,

Geoffrey D. Smith

GDS/meh

cc: Mike Vardeman
Don Emory

H:\ACTIVE CLIENT FILES\08200 Rinker\82.19 Truck Wash-RCRA Issue\smith-4-7-00-ltr.doc

BLANK, RIGSBY & MEENAN, P.A.

ATTORNEYS AT LAW

Office Address:
204 SOUTH MONROE STREET
TALLAHASSEE, FLORIDA 32301
(850) 681-6710

Mailing Address:
POST OFFICE BOX 11068
TALLAHASSEE, FLORIDA 32302-3068
FACSIMILE (850) 681-6713
(850) 681-1003
E-Mail: Postmaster@BRMFirm.com

F. PHILIP BLANK*
H. RICHARD BISBEE
JOHN R. DUNPHY
THOMAS R. McSWAIN
TIMOTHY J. MEENAN
R. TERRY RIGSBY
GEOFFREY D. SMITH

LEGAL ASSISTANT
JOHN A. DICKSON, J.D.
J. KEVIN KING, J.D.

Florida Bar Certified in Health Law

February 4, 2000

VIA: Facsimile (561) 681-6600

Jeffrey A. Smith
Department of Environmental Protection
Southeast District
Post Office Box 15425
West Palm Beach, Florida 33416

RE: Rinker Materials

Dear Jeff:

This will serve as a follow up to our meeting of January 11th regarding the issues and concerns raised during the Department's September 29, 1999 inspection of the Rinker Materials facility in Miami. During the meeting we confirmed that all of the Department's concerns arising from the site inspection have now been adequately addressed, with the exception of some additional documentation needed with regard to the truck washing operations. As discussed at that meeting, Rinker intends to implement maintenance and upgrading of the truck wash industrial waste water system by placing concrete over the entire truck wash area. A final drawing of the proposed upgrade is attached.

You also requested performance of confirmatory sampling to demonstrate no impacts from past truck wash operations. As discussed, Rinker will obtain soil samples from two locations within the truck was area as indicated on the attached drawing. The soils will be sampled for the following test parameters using the indicated test method:

Parameter	Test Method
Arsenic	SW 846 7060
Cadmium	SW 846 7031
Chromium	SW 846 7191
Lead	SW 846 7421
Calcium	SW 846 215.1
Aluminum	SW 846 202.1
TRPH	SW 846 FL-PRO
Ph	SW 846 150.1

The pH results will be evaluated to determine whether any soils exhibit a characteristic of corrosivity per 40 CFR Section 261.22 (pH of less than or equal to 2.0). Other test results will be compared to the industrial scenario guidance concentrations as set forth in Chapter 62-777, F.A.C. In the event that all results are within these guidance concentrations, no further action will be required of Rinker.

Rinker will notify you at least 24 hours prior to the scheduled sampling. Please contact Don Emery at (800) 226-7647 or (305) 229-2940 if you would like to arrange to be present during sample collection.

Thank you for your continued cooperation and assistance.

Sincerely,

Geoffrey D. Smith

GDS/meh

cc: Scott Benyon
Mike Vardeman
Don Emery

H:\ACTIVE CLIENT FILES\08200 Rinker\82.19 Truck Wash-RCRA Issue\smith1-24-00-ltr-revised.doc

Truck Washing Area
Proposed Sampling and Containment Upgrade

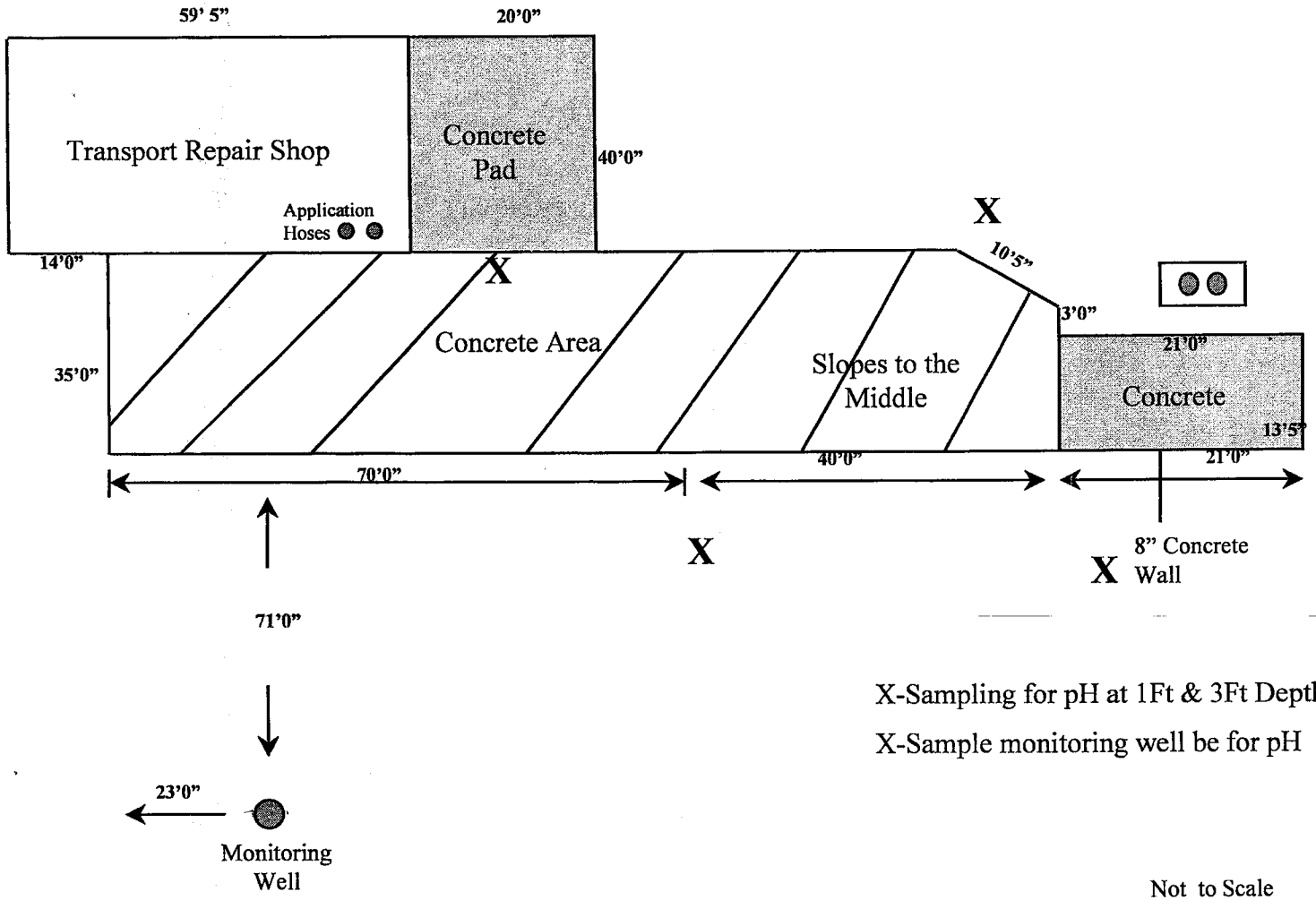

X-Sampling for pH at 1Ft & 3Ft Depths

X-Sample monitoring well be for pH

Not to Scale

8.0.19
Corresp.

STATE OF FLORIDA
DEPARTMENT OF ENVIRONMENTAL PROTECTION

ENFORCEMENT MEETING DOCUMENTATION

Attendees: See Meeting Attendance list

Location: SED DEP Office **Date:** January 11, 2000 **Time:** 10:00am

Subject: Rinker Materials Meeting

Meeting Requested By: DEP - HW Section

Meeting Objectives:

To discuss corrective actions ~~of~~ for pending violations.
****

Notes:

The main purpose of this meeting was to discuss the truckwash operation and to clarify Rinker's procedures for screening incoming soil for possible TCLP metals. Mr. Geoff Smith indicated that Rinker's new procedure was to have the generator run TCLP on any soils that have total metal concentrations (mg/kg) greater then 20x the TCLP standards. This was also stated in Rinker's October 19, 2000 letter to the Department. Mr. Jeff Smith clarified that the TCLP analysis was required pursuant to 40 CFR 262.11 and was separate from any Chapter 62-713, F.A.C requirements concerning the thermal treatment of soils. Rinker can use process knowledge to eliminate constituents from consideration.

At the present time Rinker is not using acid wash in their truckwash operation. Mr. Jeff Smith indicated to Rinker that they should not begin using the acid wash until all issues regarding integrity of the truckwash pad are resolved. The Department is concerned that continued use of the acid wash could contribute to possible discharges. They tried a 20:1 ratio with the product, but it still had a pH <2 and it wasn't effective. Rinker has also tried other products, but has not found anything effective. Rinker will continue to evaluate other products to eliminate the possible discharge of washwater with a pH <2. Rinker submitted a diagram of a proposal to expand the concrete pad to encompass the entire truckwash area. This proposal seemed to be an appropriate means to assist in preventing possible releases of hazardous constituents. Rinker submitted another diagram with a proposal to install two soil borings/monitoring wells to assess any possible releases to the soil or groundwater from the truckwashing operation. Mr. Jeff Smith indicated that Rinker needed to sample for all possible constituents that could reasonably be expected to have been released. This includes all constituents in the cement product

being washed off the truck, phosphorus from the acid used and possible petroleum constituents from the truck.
****

Follow-up Actions/Dates:

Rinker will submit a proposal on the sample locations and constituents to be analyzed to assess the soil and groundwater in the area of the truckwash. Rinker will continue to evaluate other possible products for the truckwash.

We briefly discussed the options if the soil and groundwater data indicated a discharge from the truckwash. RCRA Generator Closure or the new Remediation Order may be options to consider.

****

Prepared by:_____
Jeffrey A. Smith

DEPARTMENT OF ENVIRONMENTAL PROTECTION
FLORIDA

MEETING ATTENDANCE

DATE: 1/11/00 **PROGRAM:** HW
MEETING SUBJECT: Rinker

MEETING ROOM:	NO. OF PARTICIPANTS:	TELEPHONE:	VOICE POINT:

NAME	REPRESENTING	TELEPHONE #
Jeffrey Smith	FDEP	561/681-6670
Geoff Smith	Rinker	850-681-6710
Don M. Ewert	Rinker	305-225-1423
Jim Ayers	FDEP	561-681-6673
Michael Vardeman	Rinker	305-229-2955

mtattend 1/98

Truck Washing Area (Current)

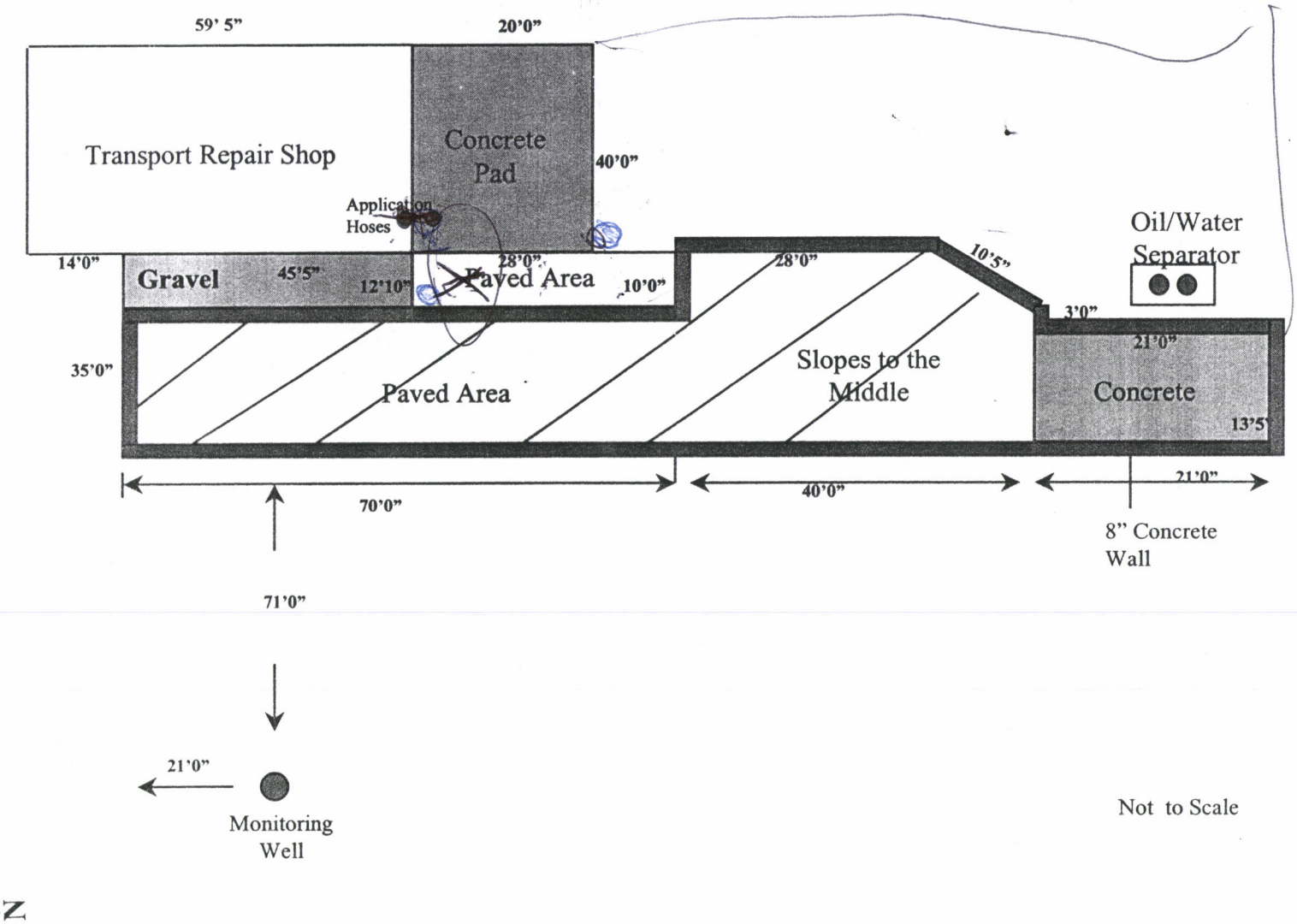

Truck Washing Area
Proposed Sampling and Containment Upgrade

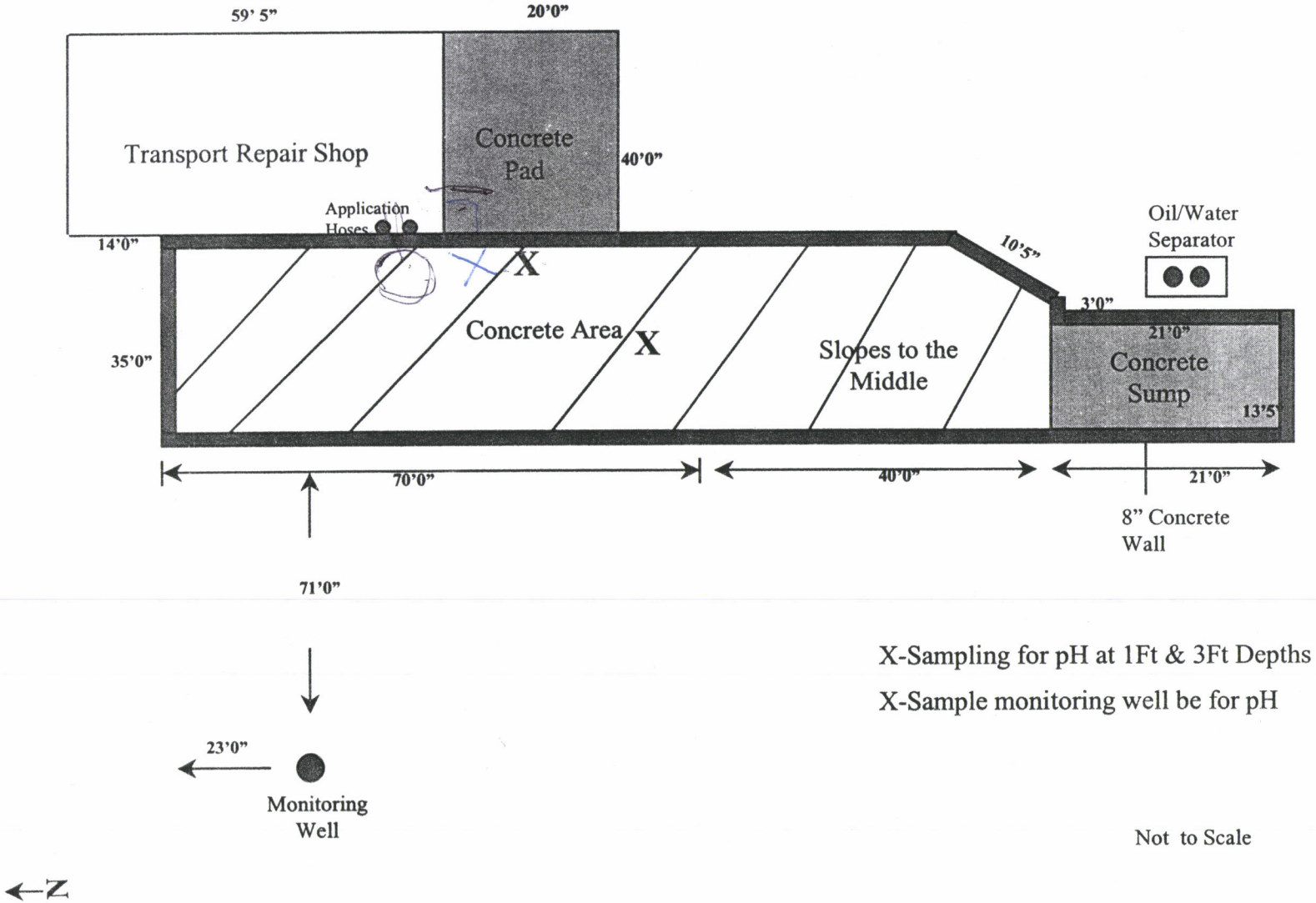

X-Sampling for pH at 1Ft & 3Ft Depths

X-Sample monitoring well be for pH

Not to Scale

BLANK, RIGSBY & MEENAN, P.A.

ATTORNEYS AT LAW

Office Address:
204 SOUTH MONROE STREET
TALLAHASSEE, FLORIDA 32301
(850) 681-6710

Mailing Address:
POST OFFICE BOX 11068
TALLAHASSEE, FLORIDA 32302-3068
FACSIMILE (850) 681-6713
(850) 681-1003
E-Mail: Postmaster@BRMFirm.com

F. PHILIP BLANK*
H. RICHARD BISBEE
JOHN R. DUNPHY
THOMAS R. McSWAIN
TIMOTHY J. MEENAN
R. TERRY RIGSBY
GEOFFREY D. SMITH

LEGAL ASSISTANT
JOHN A. DICKSON, J.D.
J. KEVIN KING, J.D.

*Florida Bar Certified in Health Law

RECEIVED
JAN - 7 2000
DEPT OF ENV PROTECTION
WEST PALM BEACH

January 5, 2000

VIA: Facsimile (561) 681-6600

Jeffrey A. Smith
Department of Environmental Protection
Southeast District
Post Office Box 15425
West Palm Beach, Florida 33416

RE: Rinker Materials

Dear Jeff:

This will confirm our meeting to discuss issues pertaining to your recent inspection of the truck wash area of Rinker Materials cement mill operations in Miami. Our meeting is scheduled for Tuesday, January 11th at 10:00 a.m. in your offices in West Palm Beach. We will be prepared to discuss and resolve all pending issues. We look forward to meeting with you.

Sincerely,

Geoffrey D. Smith

GDS/meh

cc: Mr. Don Emery

H:\GEOFF\RINKER\82.19\smith-1-4-00-ltr.doc

BLANK, RIGSBY & MEENAN, P.A.

ATTORNEYS AT LAW

Office Address:
204 SOUTH MONROE STREET
TALLAHASSEE, FLORIDA 32301
(850) 681-6710

Mailing Address:
POST OFFICE BOX 11068
TALLAHASSEE, FLORIDA 32302-3068
FACSIMILE (850) 681-6713
(850) 681-1003
E-Mail: Postmaster@BRMFirm.com

F. PHILIP BLANK*
H. RICHARD BISBEE
JOHN R. DUNPHY
THOMAS R. McSWAIN
TIMOTHY J. MEENAN
R. TERRY RIGSBY
GEOFFREY D. SMITH

LEGAL ASSISTANT
JOHN A. DICKSON, J.D.
J. KEVIN KING, J.D.

*Florida Bar Certified in Health Law

December 8, 1999

RECEIVED
DEC 13 1999
DEPT OF ENV PROTECTION
WEST PALM BEACH

VIA: FACSIMILE

Jeffrey A. Smith, Esquire
Department of Environmental Protection
Southeast District
Post Office Box 15425
West Palm Beach, Florida 33416

RE: Corrective Actions -- DEP Inspection of September 29, 1999

Dear Jeff:

This will follow up past correspondence and telephone conversations regarding the Department's inspection of the Rinker Materials Corporation cement mill facility in Dade County on September 29, 1999. In a letter dated November 3, 1999, the Department provided Rinker with preliminary findings and recommendations to improve facility operations. As noted in a letter dated from October 27, 1999 from Don Emery, Division Manager, Rinker has taken prompt actions to address the Department's concerns identified during the inspection. The following information is provided for your additional consideration in review of this matter.

Soil Acceptance Policy

Please be assured that Rinker's policy does not allow acceptance of any contaminated soils suspected of being characteristically hazardous. The generator of any soils shipped to Rinker must provide verification that the soils are non-hazardous based upon process knowledge and laboratory testing when appropriate. As you are aware, soils from petroleum contamination cleanup sites that fail TCLP (DO18-DO43) are not hazardous due to toxicity characteristic pursuant to the exemption for such materials in 40 CFR Section 261.4(b)(10). However, the RCRA exemption would not apply to soils contaminated with metals. In many instances, a site owner or cleanup contractor can make a process knowledge determination that soils from a petroleum tank cleanup site are not characteristically hazardous because they do not contain metals. Rule 62-770, F.A.C. does not require that soils at gasoline or kerosene product sites to be analyzed for metals prior to treatment or disposal.

As required by Chapter 62-775 (and recently adopted Chapter 62-713, F.A.C.), Rinker screens soils received at its treatment facility to ensure that only non-hazardous soils are received. For soils with approved Site Assessment Reports, pre-treatment sampling and analysis will no longer be required pursuant to Rule 62-713.510(4)(a), F.A.C. provided the generator verifies the soils are non-hazardous. For other soils, the sampling frequency identified in Chapter 62-713 will be used and a TCLP will be required when the total concentration for any metal contaminant is 20 times higher than the TCLP regulatory limit.

Please be assured that Rinker will continue to operate in compliance with all pre-treatment screening requirements of the Department's rules.

Truck Washing Waters

DEP also identified some concerns with regard to truck washing operations at Rinker's facility. The truck wash operations take place on a paved area with drainage to a sump in the center of the wash area. The waters in the sump then flow into an adjacent lined retention area where the water evaporates. There is no discharge to surface or ground waters. Rinker has historically used a product containing a phosphoric acid solution for truck washing operations. The cement and concrete product on the trucks is sprayed with the phosphoric acid solution. The acid solution is neutralized by the concrete and cement product and the wash waters have been ph tested and determined not to be characteristically hazardous for corrosivity. An industrial waste water permit is applicable to the truck wash operations.

During the Department's inspection, spillage and leakage of the phosphoric acid solution had formed a small puddle on the paved area adjacent to the truck work area. DEP sampled this small spill of unused product and determined it to be characteristically corrosive due to ph of less than 2.0.

To address the Department's concerns, Rinker is developing a Best Management Practice to ensure that future spillage and leaks of product do not occur. All operations will occur only within a paved impervious surface area. The spray wand will be placed into a holding drum when not directly in use to ensure that any leakage or spillage is collected in a container for reuse and recycling. All wash waters will be directed to the sump areas which will be periodically tested to ensure that the ph remains within acceptable limits. This wash-water collection system should qualify as an elementary neutralization unit which is not subject to RCRA Part 264 requirements, and is not counted as hazardous waste for purposes of determining generator status. See, 40 CFR 261.5(c)(2) and 40 CFR 264.1(g)(6), RCRA regulatory interpretation No. 175 (attached).

In regard to closure requirements, Rinker is developing a simple contamination assessment and decontamination plan for the truck wash area. Soils will be sampled and analyzed for ph. Rinker does not anticipate any impacts to soils due to neutralization of the acid solution from reaction with the existing soils. Likewise, Rinker will sample and analyze ground

water but does not anticipate any impact. Upon completion of the assessment and any decontamination, no further closure of the truck wash area should be necessary.

We trust that this additional information should be sufficient to alleviate any Department concerns. We will contact you shortly after the new year to schedule a meeting date to discuss finalization of the Best Management Practices and assessment and decontamination plan. Please let me know if you require any additional information.

Sincerely,

Geoffrey D. Smith

GDS/meh

Enclosures

cc: Mr. J. Scott Benyon
Mr. Michael Vardeman
Mr. Don Emery

H:\GEOFF\RINKER\82.19\smith-11-22-99-ltr.doc

Section 264.112(d) requires notification of partial closure for surface impoundments, waste piles, land treatment units, and landfills. This same section requires notification regarding treatment, tank storage, container storage, or incinerator facilities only in the case of final closure. Replacement of a storage tank should not constitute final closure per § 264.197, and partial closure is not applicable to a storage tank facility per § 264.112(d). While not specifically required, the owner/operator should decontaminate the removed equipment and notify the state or region of the change. However, equipment that is not decontaminated must be managed as a hazardous waste.

[July 1988; Regulatory Cross References: 264.112(d), 264.197]

RCRA-174 Wastewater Treatment Unit/Generator Accumulation Tank

A manufacturing facility generates a wastewater which is a listed hazardous waste. The wastewater is pumped to a tank for treatment where a wastewater treatment sludge is generated and subsequently sent off-site for disposal as a hazardous waste. The treatment effluent is discharged to a lake under a NPDES permit. When the facility operates in this manner, the tank meets the definition of a wastewater treatment unit in 40 *CFR* 260.10. However, regularly occurring batch processes produce a wastewater which cannot be treated to the standards specified in the facility's NPDES permit. When this occurs, the wastewater is removed from the tank and sent off-site for disposal. Is this tank classified as a wastewater treatment unit or a generator accumulation tank subject to the requirements of 40 *CFR* 262.34 and 40 *CFR* Part 265 Subpart J?

The tank would not be classified as a wastewater treatment unit under 40 *CFR* 260.10. The exemption from RCRA TSD Standards in 40 *CFR* Parts 264 and 265 for wastewater treatment units applies to any tank system that manages hazardous wastewater and is dedicated for use with an on-site wastewater treatment facility. However, if a tank, in addition to being used in conjunction with an on-site wastewater treatment facility, is used on a routine or occasional basis to store or treat a hazardous wastewater prior to shipment off-site for treatment, storage, or disposal, it is not covered by the exemption. If the facility stores the hazardous wastewater in the tank prior to off-site treatment or disposal for 90 days or less, it will be subject to the requirements of 40 *CFR* 262.34.

[July 1988; Regulatory Cross References: 260.10 "Wastewater treatment unit", 262.34, 264.1(g)(6), 265.1(c)(10)]

RCRA-175 Elementary Neutralization Units

A generator produces large volumes of corrosive waste. It is pumped directly to a tank, which is an elementary neutralization unit. However, this waste (corrosive only) remains in the tank for two months before it is actually neutralized. Is this waste counted for purposes of determining generator status? Is the corrosive waste that is stored in the neutralization unit prior to treatment included in the scope of the exemptions in §§ 264.1(g)(6), 265.1(c)(10) and 270.1(c)(2)(v)?

No. This type of waste is not counted for determining generator status. As stated in the March 24, 1986, *Federal Register* (50 *FR* 10146), wastes treated in elementary neutralization units are included in the general category of exempted or excluded wastes that would not be counted in determining generator status.

Also, this waste is not counted because it is not subject to substantive regulations in 40 *CFR* 262 and 263 as long as it remains in the neutralization unit (51 *FR* 10152).

[July 1988; Regulatory Cross References: 264.1(g)(6), 265.1(c)(10), 270.1(c)(2)(v), 270.13(j)]

RCRA-176 Hazardous Waste Tanks—Retrofitting Secondary Containment

An interim status facility owner or operator wants to retrofit his hazardous waste tank system in order to comply with the secondary containment requirements in 40 *CFR* § 265.193. Is this retrofitting activity considered a change during interim status and thus prohibited if the cost exceeds 50% of what a new facility would cost (under the 50% reconstruction limit in § 270.72)?

According to 40 *CFR* § 270.72(b)(1) (as amended in the March 7, 1989 *Federal Register*, 54 *FR* 9608) changes made solely for the purpose of complying with the requirements of § 265.193 for tanks and ancillary equipment are not subject to the reconstruction limit in § 270.72(b)(1).

[Ed Note: A March 7, 1989 final rule restores the exemption to the reconstruction limit when adding secondary containment to existing tanks. The exemption had inadvertently been omitted when the rule was revised on July 8, 1987.]

[October 1988; Regulatory Cross References: 265.193(a), 270.72(b)(1)]

RCRA-177 Financial Assurance Requirements for TSD Facilities

Three treatment, storage, and disposal (TSD) facilities are wholly owned subsidiaries of one company. The three facilities need financial coverage for nonsudden accidental occurrences: $3 million per occurrence and $6 million annual aggregate. Must the parent company provide the $3 million/$6 million for each facility (a total of $9 million/$18 million) or can all of the facilities be covered by the $3 million/$6 million?

P 109 458 603

US Postal Service

Receipt for Certified Mail

No Insurance Coverage Provided.

Do not use for International Mail *(See reverse)*

Sent to Alon Lemery	
Street & Number 1200 NW 137th Ave.	
Post Office, State, & ZIP Code Miami, FL 33182	
Postage	$ .33
Certified Fee	1.80
Special Delivery Fee	
Restricted Delivery Fee	
Return Receipt Showing to Whom & Date Delivered	1.25
Return Receipt Showing to Whom, Date, & Addressee's Address	
TOTAL Postage & Fees	$ 2.98
Postmark or Date 11/3/99 Hub Atlan	

CSR Rinker Materials
9/29 inspect.

PS Form 3800, April 1995

UNITED STATES POSTAL SERVICE

First-Class Mail
Postage & Fees Paid
USPS
Permit No. G-10

• Print your name, address, and ZIP Code in this box •

Ayers (Mat)

F.D.E.P., SOUTHEAST DISTRICT
P.O. BOX 15425
WEST PALM BEACH FL 33416

RECEIVED
NOV 15 1999
DEPT OF ENV PROTECTION
WEST PALM BEACH

Is your RETURN ADDRESS completed on the reverse side?

SENDER:

- Complete items 1 and/or 2 for additional services.
- Complete items 3, 4a, and 4b.
- Print your name and address on the reverse of this form so that we can return this card to you.
- Attach this form to the front of the mailpiece, or on the back if space does not permit.
- Write *"Return Receipt Requested"* on the mailpiece below the article number.
- The Return Receipt will show to whom the article was delivered and the date delivered.

I also wish to receive the following services (for an extra fee):

1. ☐ Addressee's Address
2. ☐ Restricted Delivery

Consult postmaster for fee.

3. Article Addressed to:
Mr. Alan Lenery
Division Mgr.
CSR Rinker Environmental Svcs.
1200 NW 137th Ave.
Miami, FL 33182

4a. Article Number
P 109 458 603

4b. Service Type
☐ Registered ☒ Certified
☐ Express Mail ☐ Insured
☐ Return Receipt for Merchandise ☐ COD

7. Date of Delivery

5. Received By: *(Print Name)*
[illegible]

8. Addressee's Address *(Only if requested and fee is paid)*

6.

PS F

Receipt

Thank you for using Return Receipt Service.

Department of Environmental Protection

Jeb Bush
Governor

Southeast District
P.O. Box 15425
West Palm Beach, Florida 33416

David B. Struhs
Secretary

NOV 3 - 1999

CERTIFIED MAIL
RETURN RECEIPT

Mr. Don Emery
Division Manager
CSR Rinker Environmental Services
1200 N.W. 137th Avenue
Miami, Florida 33182

RE: CSR Rinker Materials Corporation, 1200 N.W. 137th Avenue, Miami, Florida

Dear Mr. Emery:

The Department appreciates the documentation that was provided on October 27, 1999 in reference to the Department's September 29, 1999 inspection of the above referenced facility. The Department is in the process of reviewing the submitted documents.

During the September 29, 1999 inspection, records indicated that current CSR Rinker Materials Corporation policy may be to accept petroleum contaminated soils subject to Chapter 62-775, F.A.C. and/or Chapter 62-713, F.A.C. based solely on total metals analyses. Pursuant to Rule 62-775.400(5), F.A.C., any soils which exhibit a hazardous waste characteristic of toxicity, as established in Title 40 Code of Federal Regulations (CFR), Part 261, Subpart C, must be treated or disposed of at an approved hazardous waste treatment or disposal facility. In some cases soils that meet the total metals criteria in Rule 62-775.400(3), F.A.C. may have the potential to be characteristically hazardous.

Generators of solid wastes as defined in 40 CFR 261.2 must perform a hazardous waste determination on their wastes pursuant to 40 CFR 262.11. This determination includes, but is not limited to, performing a Toxicity Characteristic Leaching Procedure (TCLP) analysis as defined in 40 CFR 262.24. The Department has concerns that soils which are being accepted for thermal treatment by CSR Rinker Materials Corporation may actually be hazardous waste subject to Chapter 62-730, F.A.C. and 40 CFR 262-268 management standards. In the event CSR Rinker Materials Corporation accepts and thermally treats soils which exhibit a toxic characteristic, the facility could be subject to Chapter 62-730, F.A.C. and 40 CFR 264 operational and facility standards. As indicated in your October 27, 1999 submittal, CSR Rinker Materials Corporation will now require TCLP analysis on all materials where the total metals concentrations are 20 times the TCLP regulatory limit. The Department would like to encourage CSR Rinker Materials Corporation to modify their soils acceptance policy to ensure that no soils which exhibit a toxic characteristic are managed at the facility.

Also noted during the September 29, 1999 inspection were possible hazardous waste discharges from the truck wash operation. Wash waters with a pH of less than 2 were apparently being discharged from the truck wash operation. As defined in 40 CFR 261.22, any wash waters which have a pH less than 2 are considered to be characteristically hazardous. Discharges of a hazardous waste subjects the facility to Chapter 62-730, F.A.C. and 40 CFR 264 standards. As indicated the day of the inspection, the Department has requested CSR Rinker Materials Corporation to cease discharges of characteristically hazardous wash waters. As indicated in your October 27, 1999 submittal, the facility has suspended use of the corrosive product and is currently seeking alternatives. In order to address closure of the truck wash operation, CSR Rinker Materials Corporation should submit a Closure Plan in accordance with 40 CFR 264, Subpart G.

If you have any further questions concerning this matter please contact Mr. James Ayers at 561/681-6673. Thank you for your cooperation in this matter.

Sincerely,

Jeffrey A. Smith
Environmental Manager
Hazardous Waste Compliance/Enforcement Section

Cc: Roberto Abrahante, Miami-Dade DERM
West Palm Beach, DEP File

CSR Rinker

October 19, 1999

Jeffrey A. Smith
Department of Environmental Protection
400 N. Congress Avenue
West Palm Beach, FL 33416

RECEIVED
OCT 27 1999
DEPT OF ENV PROTECTION
WEST PALM BEACH

Re: Response to Inspection Exit Interview

Dear Mr. Smith:

Following are the answers to the questions to the above related document dated 9/29/99.

1.) Enclosed are the copies of the Safety Kleen manifests for the last three years. These manifests are coming from the transportation garage.
2.) Enclosed are the TCLP results for the Bottom Ash. This material is used as an aggregate in the production of cement.
3.) Enclosed is the first page of the updated contingency plan.
4.) The truck wash residue has not been reported as of today. This was due to the inclement weather. The water (pH = 6-7) flows to the lined containment.
5.) CSR Rinker understands it is our responsibility to properly manage the disposal of any waste materials left from a contractor on our site. Although there is a limited amount of this activity, CSR would like to obtain a copy of the DEP's contractor liability agreement.
6.) The truck wash operation has been reviewed with our corporate department. The use of the current product has been suspended. We are looking for alternatives that produce results as well as protect the environment and employee. Enclosed is a copy of the alternate product to Don Turner of our corporate department. The transportation manager is also going to upgrade the truck washing area. This has started with the removal of the storage container and will be continued with the review of the engineering as well as resurfacing of the contained area.
7.) Enclosed is the last copy of the laundry service for the shop rags. This is done weekly with the uniforms.
8.) CSR Rinker Environmental has implemented a policy on the metals analytical. If total metals exceed 20 times the TCLP limit, a TCLP must be run on the contaminated material.
9.) The Satellite containers in our laboratory were labeled as you requested the day you were at our facility (9/29/99).

CSR Rinker Materials Corporation, 1200 N.W. 137th Avenue, Miami, FL 33182, PO Box 650679, Miami, FL 33265-0679
Telephone (305) 221-7645 Facsimile (305) 223-5403

I hope this has cleared up any questions you may have had. If you have more questions or need anything clarified, please call me at (305)225-1423.

Sincerely,

Don M. Emery

cc: Mike Vardeman
Scott Benyon
Lee Maguire

ORIGINAL INVOICE

211-2349
06-0408
39-6090019

UMBER	LOCATION NUMBER	TAX STATUS / NUMBER	MANIFEST NUMBER	INVOICE NUMBER
-02-2828	000309702			M31317
LL TO NUMBER		SERVICE DATE 08-19-1999	INVOICE DATE 08-20-1999	PLEASE PAY INVOICE BY: 09-04-1999

SERVICE ADDRESS

RINKER- MIAMI TERMINAL TRA
1200 NW 137TH AVE
MIAMI FL 33182-1803

DPT	DESCRIPTION / PRODUCT OR SERVICE #	QUANTITY	UOM	UNIT COST	TAX	ITEM TOTAL
00	MDL 30 WITH 150 SOLVENT					
	000030150-030179994-0000000	1.0000		174.0000	11.31	185.31
	INVOICE TOTAL				$11.31	$185.31

FOR INFORMATION PLEASE CALL SK SERVICING LOCATION: 305 884-0123 MEDLEY, FL

In our continuing efforts to improve service to you, our valued customer, we will be making some changes to our invoice system this summer. You can expect to see a new and improved invoice format along with some changes to your account number and invoice number. None of the services we provide at your facilities will change, only the process to invoice for them. Once the changes are made, we will be happy to answer any questions you might have. As always, thanks for choosing Safety Kleen.

PLEASE DO NOT USE ANY STAPLES WITH REMITTANCE

RETURN THIS PORTION WITH PAYMENT TO: P.O. BOX 12349 COLUMBIA, SC 29211-2349

ACCOUNT NUMBER	INVOICE NUMBER	SERVICE DATE	INVOICE DATE	BILL TO NUMBER
3-097-02-2828-3	M31317	08-19-1999	08-20-1999	

M31317 30970228283001853100113 1

RINKER- MIAMI TERMINAL TRA
1200 NW 137TH AVE
MIAMI FL 33182-1803

AMOUNT DUE $185.31

One Brinckman Way
Elgin, Illinois 60123-7857
CUSTOMER NO.

WE CARE

DUNS NO. 05106-0408 FED. ID NO. 39-6090019

CUSTOMER

FOR SERVICE CALL	BRANCH MANAGER	DOC. EXP.	SCHEDULED SERVICE WEEK	SCHEDULED TERRITORY	REFERENCE NUMBER
305 884-0123	COMPANY RUN		99		M31317

CREDIT CODE	PREVIOUS BALANCE	BAL. OVER 60 DAYS

BUSINESS TYPE	CHAIN	OUTER COUNTY	SVC. P/C	PROD. P

LOCATION	TAX EXEMPTION NO.
309702	

CUSTOMER GENERATOR: 3-097-02

RINKER/BLANT
1200 NW 137 AV
MIAMI FL 33166

BILL TO

SERVICE DATE	SALES REP NO.	CUSTOMER P.O. NUMBER	CUSTOMER PHONE #	TAX CODE	HANDLING CODE	ASSOC. CODE	SERVICE TAX	C.O.M.S. TAX	PRODUCT TAX
8-19-99	3621								

	DEPT	SERVICE/ PRODUCT		REMARKS/ UNIT PRICE	QUAN.	CHARGE	SALES TAX	TOTAL CHARGE	WASTE MIN.	SOLVENT/DRUMS CLEAN	SPENT	# OF CONT.	SK DOT	CC	SERVICE TERM	CHANGE SERVICE TERM (WEEKS)	(INITIAL)	CHANGE SCH. DATE (YY WW)	INV. CODE	PROMO NO.	
1	00	30000			01	158 00	10 27	168 27	0.00			1	801		8						
2																					
3																					
4																					
5																					
6																					
7																					
8																					
9																					
10																					
11																					
12																					
		TOTAL-SERVICE/PRODUCTS						168 27													

WE CARE

CHECK APPROPRIATE BOXES →

	GOOD	POOR
MACHINE CONDITION & CLEANLINESS		
LAMP ASSEMBLY CONDITION		

	YES	NO
DECALS IN PLACE AND LEGIBLE		
FUSIBLE LINK INSTALLED		
EMERGENCY CLOSING OF LID UNOBSTRUCTED		

	YES	NO
MACHINE PROPERLY GROUNDED		
LOCAL PHONE NO. STICKER AFFIXED TO MACHINE		
SPENT SOLVENT MEETS ACCEPTANCE CRITERIA		

USEPA TRANSPORTER 1 ID NO.	USEPA TRANSPORTER 2 ID NO.	GENERATOR USEPA ID NO.	GENERATOR STATE ID NO.
	ILD984908202		

	11. US DOT DESCRIPTION (INCLUDING PROPER SHIPPING NAME, HAZARD CLASS, AND ID.)	12. CONTAINERS NO.	TYPE	13. TOTAL QUANTITY	14. UNIT WT/VOL	SK DOT NUMBER	5	1	6	3	0	5	5
A.	WASTE COMBUSTIBLE LIQUID, N.O.S. (PETROLEUM NAPHTHA) NA1993 PGIII(D001 D018,D039,D040)(ERG#128)6.7LBS/GAL					704							
B.	WASTE COMBUSTIBLE LIQUID,N.O.S. (PETROLEUM NAPHTHA) NA1993 PGIII (D001,D018,D039,D040)(ERG128)(6.7#/GL)	1	DM	16		801							
C.	WASTE COMPOUNDS,CLEANING LIQUID (MONOETHANOLAMINE)8 NA1760 PGIII(ERG154)(D006,D008,D027,D039,D040)(7.9#/GL)					1808							
D.													

I CERTIFY THAT MY TOTAL WASTE STREAMS ARE WITHIN ONE OF THE FOLLOWING CATEGORIES.

0 TO 220 LBS./MONTH — INITIALS

220 LBS. TO 2,200 LBS./MONTH — INITIALS

GREATER THAN 2,200 LBS./MONTH — INITIALS

DESIGNATED FACILITY NAME AND ADDRESS SAFETY-KLEEN SYSTEMS, INC.

USA EPA ID NO.

STATE ID NO.

CASH ☐ CHECK NUMBER

TOTAL RECEIVED

APPLY PAYMENT TO:
☐ TODAY'S SERVICE/SALE
☐ PREVIOUS BALANCE AS FOLLOWS

INVOICE # AMOUNT $

MANIFEST NO.

LDR MESSAGE

MANIFEST CODE SEQ # 10 D

I AGREE TO PAY THE ABOVE CHARGES AND TO BE BOUND BY THE TERMS AND CONDITIONS SET FORTH ABOVE AND ON THE REVERSE SIDE OF THIS DOCUMENT. PLEASE CHARGE MY ACCOUNT FOR THIS TRANSACTION UNLESS OTHERWISE INDICATED IN THE PAYMENT RECEIVED SECTION. THE INDIVIDUAL SIGNING THIS DOCUMENT IS DULY AUTHORIZED TO SIGN AND BIND CUSTOMER TO ITS TERMS.

"This is to certify that the above-named materials are properly classified, packaged, marked and labeled, and are in proper condition for transportation according to the applicable regulations of the Department of Transportation."

RAMIRO C. PIÑEIRO
Print Customer Name

By: _____
Customer's Authorized Representative

TOTAL CHARGE (FROM ABOVE)	168 27
WASTE MIN. (FROM ABOVE)	
TOTAL DUE	

DO NOT WRITE IN THE AREA BELOW

M31317
003621

SERVICE AND SALES ACKNOWLEDGEMENT

...EMENT CONTINUES ON THE REVERSE SIDE

One Brinckman Way
Elgin, Illinois 60123-7857

WE CARE

DUNS NO. 05106-0408 FED. ID NO. 39-

FOR SERVICE CALL	BRANCH MANAGER	DOC. EXP.	SCHEDULED SERVICE WEEK	SCHEDULED TERRITORY	NUMBER
305 884-0123	TIM SHOLL	04/17/99	99-07	17	137926

CUSTOMER NO. 3-097-02-2828

CREDIT CODE	PREVIOUS BALANCE	BAL. OVER 60 DAYS
C		

BUSINESS TYPE	CHAIN	OUTER COUNTY	SVC. P/C	PROD. P/C
04	NO	NO	496	006

LOCATION	TAX EXEMPTION NO.
309702	

GENERATOR

RINKER- MIAMI TERMINAL TRA
1200 N.W. 137TH AVENUE
MIAMI FL 33182

BILL TO

PLEASE REMIT
8755 N.W. 95TH ST.
MEDLEY, FL 33178

PAYMENT TERM
NET 30 DAYS

SERVICE DATE	SALES REP NO.	CUSTOMER P.O. NUMBER	CUSTOMER PHONE #	TAX CODE	HANDLING CODE	ASSOC. CODE	SERVICE TAX	C.O.M.S. TAX	PRODUCT TAX
4/99	3621		305-223-9200	LO-065-5159			.065	.065	.065

DEPT	SERVICE/ PRODUCT	SERIAL NUMBER	REMARKS/ UNIT PRICE	QUAN.	CHARGE	SALES TAX	TOTAL CHARGE	WASTE MIN.	SOLVENT/DRUMS CLEAN	SPENT	# OF CONT.	SK DOT	CC	SERVICE TERM	CHANGE SERVICE TERM (WEEKS)	(INITIAL)	CHANGE SCH. DATE (YY WW)	INV. CODE	PROMO NO.	RELEASE NO.	MSDS GIVEN
10	30150	30179994		1	174.00	11.31	185.31	0.00			1	717		8							
	TOTAL-SERVICE/PRODUCTS				174.00	11.31	185.31	0.00													

CHECK APPROPRIATE BOXES →

	GOOD	POOR
MACHINE CONDITION & CLEANLINESS	✓	
LAMP ASSEMBLY CONDITION	✓	

	YES	NO
DECALS IN PLACE AND LEGIBLE		
FUSIBLE LINK INSTALLED		
EMERGENCY CLOSING OF LID UNOBSTRUCTED		

	YES	NO
MACHINE PROPERLY GROUNDED	✓	
LOCAL PHONE NO. STICKER AFFIXED TO MACHINE	✓	
SPENT SOLVENT MEETS ACCEPTANCE CRITERIA	✓	

USEPA TRANSPORTER 1 ID NO.	USEPA TRANSPORTER 2 ID NO.	GENERATOR USEPA ID NO.	GENERATOR STATE ID NO.
LD984908202		FLD981758485	

1. US DOT DESCRIPTION (INCLUDING PROPER SHIPPING NAME, HAZARD CLASS, AND ID.)
ASTE COMBUSTIBLE LIQUID, N.O.S. (PETROLEUM NAPHTHA)NA1993
III (D039)(ERG#128) 6.7LBS/GAL

12. CONTAINERS NO.	TYPE	13. TOTAL QUANTITY	14. UNIT WT/VOL	SK DOT NUMBER
1	DM	16	G	717

5 66 30 55

I CERTIFY THAT MY TOTAL WASTE STREAMS ARE WITHIN ONE OF THE FOLLOWING CATEGORIES.
0 TO 220 LBS./MONTH — INITIALS
220 LBS. TO 2,200 LBS./MONTH — INITIALS
GREATER THAN 2,200 LBS./MONTH — INITIALS

USA EPA ID NO. FLD984171694
STATE ID NO.

DESIGNATED FACILITY NAME AND ADDRESS
8755 NORTHWEST 95TH ST
SAFETY-KLEEN SYSTEMS, INC.
MEDLEY, FL 33178

PAYMENT RECEIVED SECTION

CASH ☐	TOTAL RECEIVED	APPLY PAYMENT TO:
CHECK NUMBER		☐ TODAY'S SERVICE/SALE ☐ PREVIOUS BALANCE AS FOLLOWS

INVOICE #	AMOUNT $	INVOICE #	AMOUNT $
0105011600000068	0799		

CREDIT CARD NO. | AMEX VISA MC | EXP. DATE

MANIFEST NO.
XXXXX
LDR MESSAGE
LDR NOT REQ'D

MANIFEST CODE	SEQ #
DP	352

IN THE EVENT OF AN EMERGENCY CALL
1-800-468-1760 (24 hours)

I AGREE TO PAY THE ABOVE CHARGES AND TO BE BOUND BY THE TERMS AND CONDITIONS SET FORTH ABOVE AND ON THE REVERSE SIDE OF THIS DOCUMENT. PLEASE CHARGE MY ACCOUNT FOR THIS TRANSACTION UNLESS OTHERWISE INDICATED IN THE PAYMENT RECEIVED SECTION. THE INDIVIDUAL SIGNING THIS DOCUMENT IS DULY AUTHORIZED TO SIGN AND BIND CUSTOMER TO ITS TERMS.
"This is to certify that the above-named materials are properly classified, packaged, marked and labeled, and are in proper condition for transportation according to the applicable regulations of the Department of Transportation."

Print Customer Name: MENDEZ
By: Bill Mendez
Customer's Authorized Representative

THIS AGREEMENT CONTINUES ON THE REVERSE SIDE

TOTAL CHARGE (FROM ABOVE)	185.31
WASTE MIN. (FROM ABOVE)	
TOTAL DUE	

DO NOT WRITE IN THE AREA BELOW
137926
3-097-02-2828-3

SIGNING AMERICA

SERVICE AND SALES ACKNOWLEDGMENT

1999 09:51

safety-kleen

Elgin, Illinois 60123-7857

CUSTOMER NO.

3	T	0	9	7	-	0	2	-	2	8	2	8

CUSTOMER / GENERATOR

RINKER- MIAMI TERMINAL TRA
1200 N.W. 137TH AVENUE
MIAMI FL 33182

BILL TO

PAYMENT TERM NET 30 DAYS

PLEASE REMIT
8755 N.W. 95TH ST.
MEDLEY, FL 33178

FOR SERVICE CALL	BRANCH MANAGER	DOC. EXP.	SCHEDULED SERVICE WEEK	SCHEDULED TERRITORY	REFERENCE NUMBER
305 884-0123	TIM SHOLL	02/20/99	98-51	17	11082

CREDIT CODE	PREVIOUS BALANCE	BAL. OVER 60
C		

BUSINESS TYPE	CHAIN	OUTER COUNTY	SVC. P/C
09	NO	NO	491

LOCATION	TAX EXEMPTION
309702	

SERVICE DATE	SALES REP NO.	CUSTOMER P.O. NUMBER	CUSTOMER PHONE #	TAX CODE	HANDLING CODE	ASSOC. CODE	SERVICE TAX	C.O.M.S. TAX	PRODUCT T
12-18-98	7891		305-223-9200	10-065-5159			.065	.065	.065

	DEPT	SERVICE/ PRODUCT	SERIAL NUMBER	REMARKS/ UNIT PRICE	QUAN.	CHARGE	SALES TAX	TOTAL CHARGE	WASTE MIN.	SOLVENT/DRUMS CLEAN	SPENT	# OF CONT.	SK DOT	CC	SERVICE TERM	CHANGE SERVICE TERM (WEEKS)(INITIAL)	CHANGE SCH. DATE (YY WW)	INV. CODE	PROMO NO.	RELEASE NO.
1	10	30150	30179994		1	174.00	11.31	185.31	0.00			1	975		8					
2																				
3																				
6																				
7																				
8																				
9																				
10																				
11																				
12																				
TOTAL-SERVICE/PRODUCTS						174.00	11.31	185.31	0.00											

WE CARE

CHECK APPROPRIATE BOXES →

	GOOD	POOR		YES	NO		YES
MACHINE CONDITION & CLEANLINESS	☐	☐	DECALS IN PLACE AND LEGIBLE	☐	☐	MACHINE PROPERLY GROUNDED	☐
			FUSIBLE LINK INSTALLED	☐	☐	LOCAL PHONE NO. STICKER AFFIXED TO MACHINE	☐
LAMP ASSEMBLY CONDITION	☐	☐	EMERGENCY CLOSING OF LID UNOBSTRUCTED	☐	☐	SPENT SOLVENT MEETS ACCEPTANCE CRITERIA	☐

MANIFEST NO.	USEPA TRANSPORTER ID NO.	GENERATOR USEPA ID NO.	GENERATOR STATE ID NO.
XXXXX	ILD984908202	FLD981758485	

11. US DOT DESCRIPTION (INCLUDING PROPER SHIPPING NAME, HAZARD CLASS, AND ID.)

	12. CONTAINERS NO.	TYPE	13. TOTAL QUANTITY	14. UNIT WT/VOL	SK DOT NUMBER		
A. WASTE COMBUSTIBLE LIQUID, N.O.S. (PETROLEUM NAPHTHA) NA1993 PGIII (D039,D008,D018,D040)(ERG#128)6.7#/GAL	1	DM	1	6	975	5660065	
MRS. JENIFER							
C.							
D.							

I CERTIFY THAT MY TOTAL WASTE STREAMS ARE WITHIN ONE OF THE FOLLOWING CATEGORIES.

0 TO 220 LBS./MONTH — INITIALS

220 LBS. TO 2,200 LBS./MONTH — INITIALS

GREATER THAN 2,200 LBS./MONTH — INITIALS

DESIGNATED FACILITY NAME AND ADDRESS SAFETY-KLEEN SYSTEMS, INC.
755 NORTHWEST 95TH ST MEDLEY, FL 33178

USA EPA ID NO. FLD984671694

STATE ID NO.

$	CASH ☐ CHECK NUMBER	TOTAL RECEIVED	APPLY PAYMENT TO: ☐ TODAY'S SERVICE/SALE ☐ PREVIOUS BALANCE AS FOLLOWS

CE #	AMOUNT $	INVOICE #	AMOUNT $
60000068		0799	

AMEX VISA MC EXP. DATE

LDR MESSAGE: LDR NOT REQ'D

MANIFEST CODE	SEQ #
DP	361

IN THE EVENT OF AN EMERGENCY CALL 1-800-468-1760 (24 hours)

I AGREE TO PAY THE ABOVE CHARGES AND TO BE BOUND BY THE TERMS AND CONDITIONS SET FORTH ABOVE AND ON THE REVERSE SIDE OF THIS DOCUMENT. PLEASE CHARGE MY ACCOUNT FOR THIS TRANSACTION UNLESS OTHERWISE INDICATED IN THE PAYMENT RECEIVED SECTION. THE INDIVIDUAL SIGNING THIS DOCUMENT IS DULY AUTHORIZED TO SIGN AND BIND CUSTOMER TO ITS TERMS.

"This is to certify that the above-named materials are properly classified, packaged, marked and labeled, and are in proper condition for transportation according to the applicable regulations of the Department of Transportation."

X Bill Mendez
Print Customer Name

By: L Green
Customer's Authorized Representative

TOTAL CHARGE (FROM ABOVE)	
WASTE MIN. (FROM ABOVE)	
TOTAL DUE	185.31

DO NOT WRITE IN THE AREA BELOW

110828
T-097-02-2828-3

THIS AGREEMENT CONTINUES ON THE REVERSE SIDE

CUSTOMER

DUNS NO. 05106-0408 FED. ID NO. 39-6090019

One Brinckman Way
Elgin, Illinois 60123-7857

WE CARE

CUSTOMER NO. 3-097-02-2828

FOR SERVICE CALL	BRANCH MANAGER	DOC. EXP.	SCHEDULED SERVICE WEEK	SCHEDULED TERRITORY
305 884-0123	TIM SHOLL	12/26/98	98-43	67

CREDIT CODE	PREVIOUS BALANCE	BAL. OV
C		

BUSINESS TYPE	CHAIN	OUTER COUNTY	SVC. P/C	PR
07	NO	NO	496	01

LOCATION	TAX EXEMPTION NO.
309702	

SERVICE TAX	C.O.M.S. TAX	PRODUCT TAX
.065	.065	.065

BILL TO

PLEASE REMIT
8755 N.W. 95TH ST.
MEDLEY, FL 33178

PAYMENT TERM
NET 30 DAYS

RINKER- MIAMI TERMINAL TRA
1200 N.W. 137TH AVENUE
MIAMI FL 33182

CUSTOMER PHONE #	TAX CODE	HANDLING CODE	ASSOC. CODE
305-223-9200	10-065-5159		

SERVICE DATE	SALES REP NO.	CUSTOMER P.O. NUMBER
10-20-98	3621	

DEPT	SERVICE/ PRODUCT	SERIAL NUMBER	REMARKS/ UNIT PRICE	QUAN.	CHARGE	SALES TAX	TOTAL CHARGE	WASTE MIN.	SOLVENT/DRUMS CLEAN	SPENT	# OF CONT.	SK DOT	CC	SERVICE TERM	CHANGE SERVICE TERM (WEEKS)	(INITIAL)	CHANGE SCH. DATE (YY WW)	INV. CODE	PROMO NO.	RELEASE NO.	MSDS GIVEN
003	050	30179994		1	174.00	11.31	185.31	0.00			1	975		8							
					174.00	11.31	185.31	0.00													

TOTAL-SERVICE/PRODUCTS

CHECK APPROPRIATE BOXES →

	GOOD	POOR
MACHINE CONDITION & CLEANLINESS	✓	
LAMP ASSEMBLY CONDITION	✓	

	YES	NO
DECALS IN PLACE AND LEGIBLE	✓	
FUSIBLE LINK INSTALLED		
EMERGENCY CLOSING OF LID UNOBSTRUCTED		
MACHINE PROPERLY GROUNDED	✓	
LOCAL PHONE NO. STICKER AFFIXED TO MACHINE		
SPENT SOLVENT MEETS ACCEPTANCE CRITERIA		

MANIFEST NO.	USEPA TRANSPORTER ID NO.	GENERATOR USEPA ID NO.	GENERATOR STATE ID NO.
XXXXX	ILD984708202	FLD981758485	

	SK DOT DESCRIPTION (INCLUDING PROPER SHIPPING NAME, HAZARD CLASS, AND ID.)	12. CONTAINERS NO.	TYPE	13. TOTAL QUANTITY	14. UNIT WT/VOL	SK DOT NUMBER
A.	WASTE COMBUSTIBLE LIQUID, N.O.S. (PETROLEUM NAPHTHA) NA1993 PGIII (D039,D008,D018,D040)(ERG#128)6.7#/GAL	1	DM	16	G	975
B.						
C.						
D.						

5661055

I CERTIFY THAT MY TOTAL WASTE STREAMS ARE WITHIN ONE OF THE FOLLOWING CATEGORIES:

0 TO 220 LBS./MONTH — INITIALS

220 LBS. TO 2,200 LBS./MONTH — INITIALS

GREATER THAN 2,200 LBS./MONTH — INITIALS

USA EPA ID NO. FLD984172694

STATE ID NO.

DESIGNATED FACILITY NAME AND ADDRESS
SAFETY-KLEEN SYSTEMS, INC.
8755 NORTHWEST 95TH ST MEDLEY, FL 33178

PAYMENT RECEIVED SECTION

CASH ☐	TOTAL RECEIVED	APPLY PAYMENT TO:
CHECK NUMBER		☐ TODAY'S SERVICE/SALE ☐ PREVIOUS BALANCE AS FOLLOWS

INVOICE #	AMOUNT $	INVOICE #	AMOUNT $

PREVIOUS CREDIT CARD NO → 5405011600000068 0799

CREDIT CARD NO. | AMEX VISA MC | EXP. DATE

LDR MESSAGE
LDR NOT REQ'D

MANIFEST CODE	SEQ #
DP	360

IN THE EVENT OF AN EMERGENCY CALL

I AGREE TO PAY THE ABOVE CHARGES AND TO BE BOUND BY THE TERMS AND CONDITIONS SET FORTH ABOVE AND ON THE REVERSE SIDE OF THIS DOCUMENT. PLEASE CHARGE MY ACCOUNT FOR THIS TRANSACTION UNLESS OTHERWISE INDICATED IN THE PAYMENT RECEIVED SECTION. THE INDIVIDUAL SIGNING THIS DOCUMENT IS DULY AUTHORIZED TO SIGN AND BIND CUSTOMER TO ITS TERMS.

"This is to certify that the above-named materials are properly classified, packaged, marked and labeled, and are in proper condition for transportation according to the applicable regulations of the Department of Transportation."

Bill Hender

Print Customer Name

By: Customer's Authorized Representative

TOTAL CHARGE (FROM ABOVE)	
WASTE MIN. (FROM ABOVE)	
TOTAL DUE	185.31

DO NOT WRITE IN THE AREA BELOW

023442
3-097-02-2828-3

...ES ON THE REVERSE SIDE

...EDGMENT

One Brinckman Way
Elgin, Illinois 60123-7857
CUSTOMER NO.

safety-kleen.

WE CARE

DUNS NO. 05106-0408 FED. ID NO. 39-6090019

CUSTOMER

FOR SERVICE CALL	BRANCH MANAGER	DOC. EXP.	SCHEDULED SERVICE WEEK	SCHEDULED TERRITORY	REFERENCE NUMBER
305 894-0123	TIM SHOLL	10/31/98	98-35	17	737656

CREDIT CODE	PREVIOUS BALANCE	BAL. OVER 60 DAYS
C		

BUSINESS TYPE	CHAIN	OUTER COUNTY	SVC. P/C	PROD. P/C
09	NO	NO	491	001

LOCATION	TAX EXEMPTION NO.
309703	

CUSTOMER

3	-	0	9	7	-	0	2	-	2	8	2	8

GENERATOR

RINKER- MIAMI TERMINAL TRA
1200 N.W. 137TH AVENUE
MIAMI FL 33182

BILL TO

SAFETY KLEEN
8755 N.W. 95 ST.
MEDLEY, FL 33178

PAYMENT TERM
NET 30 DAYS

SERVICE DATE	SALES REP NO.	CUSTOMER P.O. NUMBER	CUSTOMER PHONE #	TAX CODE	HANDLING CODE		ASSOC. CODE	SERVICE TAX	C.O.M.S. TAX	PRODUCT TAX
9/26/98	3621		305-223-9200	10-065-5159				.065	.065	.065

	DEPT	SERVICE/ PRODUCT	SERIAL NUMBER	REMARKS/ UNIT PRICE	QUAN.	CHARGE	SALES TAX	TOTAL CHARGE	WASTE MIN.	SOLVENT/DRUMS CLEAN	SPENT	# OF CONT.	SK DOT	CC	SERVICE TERM	CHANGE SERVICE TERM (WEEKS)	(INITIAL)	CHANGE SCH. DATE (YY WW)	INV. CODE	PROMO NO.	RELEASE NO.	MSDS GIVE
1	70	70150	30179994		1	174.00	11.31	185.31	0.00			1	975		A							
2																						
3																						
4																						
5																						
6																						
7																						
8																						
9																						
10																						
11																						
12																						
		TOTAL-SERVICE/PRODUCTS				174.00	11.31	185.31	0.00													

WE CARE

CHECK APPROPRIATE BOXES →

	GOOD	POOR
MACHINE CONDITION & CLEANLINESS	✓	
LAMP ASSEMBLY CONDITION		

	YES	NO
DECALS IN PLACE AND LEGIBLE	✓	
FUSIBLE LINK INSTALLED	✓	
EMERGENCY CLOSING OF LID UNOBSTRUCTED	✓	
MACHINE PROPERLY GROUNDED	✓	
LOCAL PHONE NO. STICKER AFFIXED TO MACHINE	✓	
SPENT SOLVENT MEETS ACCEPTANCE CRITERIA	✓	

MANIFEST NO.	USEPA TRANSPORTER ID NO.	GENERATOR USEPA ID NO.	GENERATOR STATE ID NO.
XXXXX	ILD984908702	FLD981758485	

11. US DOT DESCRIPTION (INCLUDING PROPER SHIPPING NAME, HAZARD CLASS, AND ID.)

	12. CONTAINERS NO.	TYPE	13. TOTAL QUANTITY	14. UNIT WT/VOL	SK DOT NUMBER
A. WASTE COMBUSTIBLE LIQUID, N.O.S. (PETROLEUM NAPHTHA) NA1993 PG III (D039,D003,D018,D040)(ERG#128)6.7#/GAL	1	DM	16	G	975
B.					
C.					
D.					

5166055

I CERTIFY THAT MY TOTAL WASTE STREAMS ARE WITHIN ONE OF THE FOLLOWING CATEGORIES:

0 TO 220 LBS./MONTH — INITIALS

220 LBS. TO 2,200 LBS./MONTH — INITIALS

GREATER THAN 2,200 LBS./MONTH — INITIALS

DESIGNATED FACILITY NAME AND ADDRESS
8755 NORTHWEST 95TH ST SAFETY-KLEEN SYSTEMS, INC. MEDLEY, FL 33178

USA EPA ID NO. FLD984171694
STATE ID NO.

PAYMENT RECEIVED SECTION

CASH ☐
CHECK NUMBER

TOTAL RECEIVED

APPLY PAYMENT TO:
☐ TODAY'S SERVICE/SALE
☐ PREVIOUS BALANCE AS FOLLOWS

INVOICE #	AMOUNT $	INVOICE #	AMOUNT $

CREDIT CARD NO. 5405011600000068 0799
AMEX VISA MC
EXP. DATE 0799

LDR MESSAGE
LDR NOT REQ'D

MANIFEST CODE	SEQ #
DP	364

IN THE EVENT OF AN EMERGENCY CALL

I AGREE TO PAY THE ABOVE CHARGES AND TO BE BOUND BY THE TERMS AND CONDITIONS SET FORTH ABOVE AND ON THE REVERSE SIDE OF THIS DOCUMENT. PLEASE CHARGE MY ACCOUNT FOR THIS TRANSACTION UNLESS OTHERWISE INDICATED IN THE PAYMENT RECEIVED SECTION. THE INDIVIDUAL SIGNING THIS DOCUMENT IS DULY AUTHORIZED TO SIGN AND BIND CUSTOMER TO ITS TERMS.

"This is to certify that the above-named materials are properly classified, packaged, marked and labeled, and are in proper condition for transportation according to the applicable regulations of the Department of Transportation."

Print Customer Name: RAMIRO C. PINEIRO

By: _____
Customer's Authorized Representative

TOTAL CHARGE (FROM ABOVE)	185.31
WASTE MIN. (FROM ABOVE)	
TOTAL DUE	

DO NOT WRITE IN THE AREA BELOW

737656
3-097-02-2828-3

SERVICE AND SALES ACKNOWLEDGMENT

DUNS NO. 05106-0408 FED. ID NO. 39-6090019

CUSTOMER

safety-kleen.

One Brinckman Way
Elgin, Illinois 60123-7857

WE CARE

CUSTOMER NO. 3-097-02-2828

FOR SERVICE CALL	BRANCH MANAGER	DOC. EXP.	SCHEDULED SERVICE WEEK	SCHEDULED TERRITORY	REFERENCE NUMBER
305 884-0123	TIM SHOLL	09/05/98	98-27	17	925181

CREDIT CODE	PREVIOUS BALANCE	BAL. OVER 60 DAYS
C		

BUSINESS TYPE	CHAIN	OUTER COUNTY	SVC. P/C	PROD. P/C
09	NO	NO	391	001

LOCATION	TAX EXEMPTION NO.
309702	

GENERATOR

RINKER- MIAMI TERMINAL TRA
1200 N.W. 137TH AVENUE
MIAMI FL 33182

BILL TO

PAYMENT TERM
NET 30 DAYS

PLEASE REMIT
8755 N.W. 95TH ST.
MEDLEY, FL 33178

SERVICE DATE	SALES REP NO.	CUSTOMER P.O. NUMBER	CUSTOMER PHONE #	TAX CODE	HANDLING CODE	ASSOC. CODE	SERVICE TAX	C.O.M.S. TAX	PRODUCT TAX
7/10/98	4003		305-223-9200	10-065-5159			.065	.065	.065

	DEPT	SERVICE/ PRODUCT	SERIAL NUMBER	REMARKS/ UNIT PRICE	QUAN.	CHARGE	SALES TAX	TOTAL CHARGE	WASTE MIN.	SOLVENT/DRUMS CLEAN	SPENT	# OF CONT.	SK DOT	CC	SERVICE TERM	CHANGE SERVICE TERM (WEEKS)	(INITIAL)	CHANGE SCH. DATE (YY WW)	INV. CODE	PROMO NO.	RELEASE NO.	MSD GIVE
1	00	30150	30179994		1	165.75	10.77	176.52	0.00			1	975		8							
2																						
3																						
4																						
5																						
6																						
7																						
8																						
9																						
10																						
11																						
12																						
TOTAL-SERVICE/PRODUCTS						165.75	10.77	176.52	0.00													

WE CARE

CHECK APPROPRIATE BOXES →

	GOOD	POOR
MACHINE CONDITION & CLEANLINESS	✓	
LAMP ASSEMBLY CONDITION		

	YES	NO
DECALS IN PLACE AND LEGIBLE	✓	
FUSIBLE LINK INSTALLED		
EMERGENCY CLOSING OF LID UNOBSTRUCTED	✓	

	YES	NO
MACHINE PROPERLY GROUNDED	✓	
LOCAL PHONE NO. STICKER AFFIXED TO MACHINE		
SPENT SOLVENT MEETS ACCEPTANCE CRITERIA	✓	

MANIFEST NO.	USEPA TRANSPORTER ID NO.	GENERATOR USEPA ID NO.	GENERATOR STATE ID NO.
XXXXX	TLD984703202	FLD981758485	

11. US DOT DESCRIPTION (INCLUDING PROPER SHIPPING NAME, HAZARD CLASS, AND ID.)

	12. CONTAINERS NO.	TYPE	13. TOTAL QUANTITY	14. UNIT WT/VOL	SK DOT NUMBER	
A. WASTE COMBUSTIBLE LIQUID, N.O.S. (PETROLEUM NAPHTHA) NA1993 PG III (D039,D008,D018,D040)(ERG#128)6.7#/GAL	1	DM	16	G	975	5163055 1
B.						
C.						
D.						

I CERTIFY THAT MY TOTAL WASTE STREAMS ARE WITHIN ONE* OF THE FOLLOWING CATEGORIES.

0 TO 220 LBS./MONTH — INITIALS

220 LBS. TO 2,200 LBS./MONTH — INITIALS

GREATER THAN 2,200 LBS./MONTH — INITIALS

USA EPA ID NO. FLD984171694

STATE ID NO.

DESIGNATED FACILITY NAME AND ADDRESS SAFETY-KLEEN CORP.
8755 NORTHWEST 95TH ST MEDLEY, FL 33178

PAYMENT RECEIVED SECTION

CASH ☐ CHECK NUMBER	TOTAL RECEIVED	APPLY PAYMENT TO: ☐ TODAY'S SERVICE/SALE ☐ PREVIOUS BALANCE AS FOLLOWS

INVOICE #	AMOUNT $	INVOICE #	AMOUNT $
40501160000068	0799		

CREDIT CARD NO. AMEX VISA MC EXP. DATE

LDR MESSAGE
LDR NOT REQ'D

MANIFEST CODE	SEQ #
DP	386

IN THE EVENT OF AN EMERGENCY CALL 1-800-468-1760 (24 hours)

I AGREE TO PAY THE ABOVE CHARGES AND TO BE BOUND BY THE TERMS AND CONDITIONS SET FORTH ABOVE AND ON THE REVERSE SIDE OF THIS DOCUMENT. PLEASE CHARGE MY ACCOUNT FOR THIS TRANSACTION UNLESS OTHERWISE INDICATED IN THE PAYMENT RECEIVED SECTION. THE INDIVIDUAL SIGNING THIS DOCUMENT IS DULY AUTHORIZED TO SIGN AND BIND CUSTOMER TO ITS TERMS.

"This is to certify that the above-named materials are properly classified, packaged, marked and labeled, and are in proper condition for transportation according to the applicable regulations of the Department of Transportation."

Print Customer Name

By: Customer's Authorized Representative

TOTAL CHARGE (FROM ABOVE)	
WASTE MIN. (FROM ABOVE)	
TOTAL DUE	176.52

DO NOT WRITE IN THE AREA BELOW

925181
3-097-02-2828-3

THIS AGREEMENT CONTINUES ON THE REVERSE SIDE

WE CARE

DUNS NO. 05106-0408 FED. ID NO. 39-6090019

CUSTOMER

FOR SERVICE CALL	BRANCH MANAGER	DOC. EXP.	SCHEDULED SERVICE WEEK	SCHEDULED TERRITORY	REFERENCE NUMBER
305 884-0127	TIM SHOLL	07/11/98	98-19	17	138509

CREDIT CODE	PREVIOUS BALANCE	BAL. OVER 60 DAYS
C		

BUSINESS TYPE	CHAIN	OUTER COUNTY	SVC. P/C	PROD. P/C
09	NO	NO	791	001

LOCATION	TAX EXEMPTION NO.
309703	

CUSTOMER NO. 2 9 2 - 0 3 - 2 8 2 8

GENERATOR

RINKER- MIAMI TERMINAL TRA
1300 N.W. 137TH AVENUE
MIAMI FL 33182

BILL TO

SERVICE DATE	SALES REP NO.	CUSTOMER P.O. NUMBER	CUSTOMER PHONE #	TAX CODE	HANDLING CODE		ASSOC. CODE	SERVICE TAX	C.O.M.S. TAX	PRODUCT TAX
06/13/98	8984		305-623-7200	10-065-5159				.065	.065	.065

	DEPT	SERVICE/ PRODUCT	SERIAL NUMBER	REPAIRS/ UNIT PRICE	QUAN.	CHARGE	SALES TAX	TOTAL CHARGE	WASTE MIN.	SOLVENT/DRUMS CLEAN	SPENT	# OF CONT.	SK DOT	CC	SERVICE TERM	CHANGE SERVICE TERM (WEEKS)	(INITIAL)	CHANGE SCH. DATE (YY WW)	INV. CODE	PROMO NO.	RELEASE NO.	MSI GIV
1	0	30150	30179990		1	165.75	10.77	176.52	0.00			1	975		8							
2																						
3																						
4																						
5																						
6																						
7																						
8																						
9																						
10																						
11																						
12																						

TOTAL-SERVICE/PRODUCTS 165.75 10.77 176.52 0.00

CHECK APPROPRIATE BOXES →

	GOOD	POOR
MACHINE CONDITION & CLEANLINESS	✓	
LAMP ASSEMBLY CONDITION	✓	

	YES	NO
DECALS IN PLACE AND LEGIBLE	✓	
FUSIBLE LINK INSTALLED	✓	
EMERGENCY CLOSING OF LID UNOBSTRUCTED		

	YES	NO
MACHINE PROPERLY GROUNDED	✓	
LOCAL PHONE NO. STICKER AFFIXED TO MACHINE	✓	
SPENT SOLVENT MEETS ACCEPTANCE CRITERIA	✓	

MANIFEST NO.	USEPA TRANSPORTER ID NO.	GENERATOR USEPA ID NO.	GENERATOR STATE ID NO.
XXXXX	ILD984003352	FLD981758435	

11. US DOT DESCRIPTION (INCLUDING PROPER SHIPPING NAME, HAZARD CLASS, AND ID.)

	11. US DOT DESCRIPTION	12. CONTAINERS NO.	TYPE	13. TOTAL QUANTITY	14. UNIT WT/VOL	SK DOT NUMBER	
A.	WASTE COMBUSTIBLE LIQUID, N.O.S. (PETROLEUM NAPHTHA) NA1993 III (0075,0008,0218,0049)(ERG#128)6.7#/GAL	01	DM	017	C	975	1
B.							
C.							
D.							

I CERTIFY THAT MY TOTAL WASTE STREAMS ARE WITHIN ONE OF THE FOLLOWING CATEGORIES.

0 TO 220 LBS./MONTH — INITIALS

220 LBS. TO 2,200 LBS./MONTH — R.P. INITIALS

GREATER THAN 2,200 LBS./MONTH — INITIALS

DESIGNATED FACILITY NAME AND ADDRESS SAFETY-KLEEN CORP.
1755 NORTHWEST 95TH ST MEDLEY, FL 33178

USA EPA ID NO. FLD984172694

STATE ID NO.

PAYMENT RECEIVED SECTION

CASH ☐	TOTAL RECEIVED	APPLY PAYMENT TO:
CHECK NUMBER		☐ TODAY'S SERVICE/SALE ☐ PREVIOUS BALANCE AS FOLLOWS

INVOICE #	AMOUNT $	INVOICE #	AMOUNT $

PREVIOUS CREDIT CARD NO → 5405011600000068 0799

CREDIT CARD NO. | AMEX VISA MC | EXP. DATE

CUSTOMER REFERENCE

LDR MESSAGE
LDR NOT REQ'D

MANIFEST CODE	SEQ #
OP	155

IN THE EVENT OF AN EMERGENCY CALL

I AGREE TO PAY THE ABOVE CHARGES AND TO BE BOUND BY THE TERMS AND CONDITIONS SET FORTH ABOVE AND ON THE REVERSE SIDE OF THIS DOCUMENT. PLEASE CHARGE MY ACCOUNT FOR THIS TRANSACTION UNLESS OTHERWISE INDICATED IN THE PAYMENT RECEIVED SECTION. THE INDIVIDUAL SIGNING THIS DOCUMENT IS DULY AUTHORIZED TO SIGN AND BIND CUSTOMER TO ITS TERMS.

"This is to certify that the above-named materials are properly classified, packaged, marked and labeled, and are in proper condition for transportation according to the applicable regulations of the Department of Transportation."

Signature and Title

Print Customer Name

By: Customer's Authorized Representative

TOTAL CHARGE (FROM ABOVE)	
WASTE MIN. (FROM ABOVE)	
TOTAL DUE	176.52

DO NOT WRITE IN THE AREA BELOW

138509
7-797-02-2828-3

SERVICE AND SALES ACKNOWLEDGMENT

One Brinckman Way
Elgin, Illinois 60123-7857
CUSTOMER NO.

WE CARE

DUNS NO. 05106-0408 FED. ID NO. 39-6090019

CUSTOMER

FOR SERVICE CALL	BRANCH MANAGER	DOC. EXP.	SCHEDULED SERVICE WEEK	SCHED TERRIT
305 884-0123	TIM SHOLL	05/14/98	98-11	77

CREDIT CODE	PREVIOUS BALANCE
C	

BUSINESS TYPE	CHAIN	OUTER COUNTY
09	NO	NO

LOCATION	TAX E
309778	

GENERATOR: 0 0 9 7 - 0 2 - 2 8 2 8

RINKER- MIAMI TERMINAL TRA
1200 N.W. 137TH AVENUE
MIAMI, FL 33182

BILL TO

SERVICE DATE	SALES REP NO.	CUSTOMER P.O. NUMBER	CUSTOMER PHONE #	TAX CODE	HANDLING CODE		ASSOC. CODE	SERVICE TAX	C.O.M.S. TAX	PI
3-16-98	3621		305-223-7200	10-063-5139				.065	.065	

DEPT	SERVICE/ PRODUCT	SERIAL NUMBER	REMARKS	QUAN.	CHARGE	SALES TAX	TOTAL CHARGE	WASTE MIN.	SOLVENT/DRUMS CLEAN	SPENT	# OF CONT.	SK DOT	CC	SERVICE TERM	CHANGE SERVICE TERM (WEEKS)	(INITIAL)	CHANGE SCH. DATE (YY WW)	INV. CODE	PROMO NO.	
00	30150	20179994		1	165.75	10.77	176.52	0.00			1	972		A						
TOTAL-SERVICE/PRODUCTS					165.75	10.77	176.52	0.00												

CHECK APPROPRIATE BOXES →

	GOOD	POOR
MACHINE CONDITION & CLEANLINESS	✓	
LAMP ASSEMBLY CONDITION	✓	

	YES	NO
DECALS IN PLACE AND LEGIBLE	✓	
FUSIBLE LINK INSTALLED	✓	
EMERGENCY CLOSING OF LID UNOBSTRUCTED		

	YES	NO
MACHINE PROPERLY GROUNDED	✓	
LOCAL PHONE NO. STICKER AFFIXED TO MACHINE	✓	
SPENT SOLVENT MEETS ACCEPTANCE CRITERIA	✓	

MANIFEST NO.	USEPA TRANSPORTER ID NO.	GENERATOR USEPA ID NO.	GENERATOR STATE ID NO.
XXXXX	ILD984309223	FLD981758445	

11. US DOT DESCRIPTION (INCLUDING PROPER SHIPPING NAME, HAZARD CLASS, AND ID.)

WASTE COMBUSTIBLE LIQUID, N.O.S. (PETROLEUM NAPHTHA) NA1993 PGIII (D039,D008,D018,D040)(ERG#129)6.7#/GAL

12. CONTAINERS NO.	TYPE	13. TOTAL QUANTITY	14. UNIT WT/VOL	SK DOT NUMBER	5	6	7	55
1	DM	16	G	972				

I CERTIFY THAT MY TOTAL WASTE STREAMS ARE WITHIN ONE OF THE FOLLOWING CATEGORIES:

0 TO 220 LBS./MONTH — INITIALS

220 LBS. TO 2,200 LBS./MONTH — INITIALS

GREATER THAN 2,200 LBS./MONTH — INITIALS

DESIGNATED FACILITY NAME AND ADDRESS: SAFETY-KLEEN CORP.
8755 NORTHWEST 75TH ST MEDLEY, FL 33178

USA EPA ID NO. FLD984172674
STATE ID NO.

PAYMENT RECEIVED SECTION

CASH ☐	TOTAL RECEIVED	APPLY PAYMENT TO:
CHECK NUMBER		☐ TODAY'S SERVICE/SALE ☐ PREVIOUS BALANCE AS FOLLOWS

INVOICE #	AMOUNT $	INVOICE #	AMOUNT $

PREVIOUS CREDIT CARD NO → 5405011600000063 0797

CREDIT CARD NO. | AMEX VISA MC | EXP. DATE

CUSTOMER REFERENCE INFORMATION

LDR MESSAGE: LDR NOT REQ'D

MANIFEST CODE	SEQ #
OP	353

IN THE EVENT OF AN EMERGENCY CALL 1-800-468-1760 (24 hours)

I AGREE TO PAY THE ABOVE CHARGES AND TO BE BOUND BY THE TERMS AND CONDITIONS SET FORTH ABOVE AND ON THE REVERSE SIDE OF THIS DOCUMENT. PLEASE CHARGE MY ACCOUNT FOR THIS TRANSACTION UNLESS OTHERWISE INDICATED IN THE PAYMENT RECEIVED SECTION. THE INDIVIDUAL SIGNING THIS DOCUMENT IS DULY AUTHORIZED TO SIGN AND BIND CUSTOMER TO ITS TERMS.

"This is to certify that the above-named materials are properly classified, packaged, marked and labeled, and are in proper condition for transportation according to the applicable regulations of the Department of Transportation."

RAMIRO C. PIÑEIRO
Print Customer Name

By: _____
Customer's Authorized Representative

TOTAL CHARGE (FROM ABOVE)	
WASTE MIN. (FROM ABOVE)	
TOTAL DUE	176.52

DO NOT WRITE IN THE AREA BELOW

SERVICE AND SALES ACKNOWLEDGMENT
PART 1366 (Rev. 11/97)

One Brinckman Way
Elgin, Illinois 60123-7857
CUSTOMER NO.

WE CARE

DUNS NO. 05106-0408 FED. ID NO. 39-6090019

CUSTOMER

FOR SERVICE CALL	BRANCH MANAGER	DOC. EXP.	SCHEDULED SERVICE WEEK	SCHEDULED TERRITORY	REFERENCE NUMBER
305 884-0123	TIM SHOLL	03/21/98	98-03	17	132559

CREDIT CODE	PREVIOUS BALANCE	BAL. OVER 60 DAYS
C		

BUSINESS TYPE	CHAIN	OUTER COUNTY	SVC. P/C	PROD. P/C.
09	NO	NO	391	001

LOCATION	TAX EXEMPTION NO.
309702	

3 - 0 9 7 - 0 2 - 2 8 2 8

GENERATOR

RINKER- MIAMI TERMINAL TRA
1200 N.W. 137TH AVENUE
MIAMI FL 33182

BILL TO

SERVICE DATE	SALES REP NO.	CUSTOMER P.O. NUMBER	CUSTOMER PHONE #	TAX CODE	HANDLING CODE		ASSOC. CODE	SERVICE TAX	C.O.M.S. TAX	PRODUCT TAX
01/21/98	8484		305-223-9200	10-065-5159				.065	.065	.065

DEPT	SERVICE/ PRODUCT	SERIAL NUMBER	REMARKS	QUAN.	CHARGE	SALES TAX	TOTAL CHARGE	WASTE MIN.	SOLVENT/DRUMS CLEAN	SPENT	# OF CONT.	SK DOT	CC	SERVICE TERM	CHANGE SERVICE TERM (WEEKS)	(INITIAL)	CHANGE SCH. DATE (YY WW)	INV. CODE	PROMO NO.	RELEASE NO.	MSDS GIVEN
00	30150	30179994		1	165.75	10.77	176.52	0.00			1	975		8							☐
																					☐
																					☐
																					☐
																					☐
																					☐
																					☐
																					☐
																					☐
																					☐
																					☐
																					☐
																					☐
																					☐

PLEASE REMIT
8755 N.W. 95TH ST.
MEDLEY, FL 33178

PAYMENT TERM
NET 30 DAYS

TOTAL-SERVICE/PRODUCTS		165.75	10.77	176.52	0.00

CHECK APPROPRIATE BOXES →

	GOOD	POOR
MACHINE CONDITION & CLEANLINESS	☑	☐
LAMP ASSEMBLY CONDITION	☑	☐

	YES	NO
DECALS IN PLACE AND LEGIBLE	☑	☐
FUSIBLE LINK INSTALLED	☑	☐
EMERGENCY CLOSING OF LID UNOBSTRUCTED	☑	☐

	YES	NO
MACHINE PROPERLY GROUNDED	☑	☐
LOCAL PHONE NO. STICKER AFFIXED TO MACHINE	☑	☐
SPENT SOLVENT MEETS ACCEPTANCE CRITERIA	☑	☐

MANIFEST NO.	USEPA TRANSPORTER ID NO.	GENERATOR USEPA ID NO.	GENERATOR STATE ID NO.
XXXXX	ILD984908202	FLD981758495	

11. US DOT DESCRIPTION (INCLUDING PROPER SHIPPING NAME, HAZARD CLASS, AND ID.)

	12. CONTAINERS NO.	TYPE	13. TOTAL QUANTITY	14. UNIT WT/VOL	SK DOT NUMBER
WASTE COMBUSTIBLE LIQUID, N.O.S. (PETROLEUM NAPHTHA) NA1993 PG III (D039,D008,D018,D043)(ERG#128)6.7#/GAL	01	DM	017	G	975

5	6	7	8	9	5
			1		

I CERTIFY THAT MY TOTAL WASTE STREAMS ARE WITHIN ONE OF THE FOLLOWING CATEGORIES.

0 TO 220 LBS./MONTH — INITIALS

220 LBS. TO 2,200 LBS./MONTH — INITIALS

GREATER THAN 2,200 LBS./MONTH — INITIALS

DESIGNATED FACILITY NAME AND ADDRESS SAFETY-KLEEN CORP.
755 NORTHWEST 95TH ST MEDLEY, FL 33178

USA EPA ID NO. FLD984171694
STATE ID NO.

SERVICE AND SALES ACKNOWLEDGMENT
PART 1366 (Rev. 11/97)

CASH ☐	TOTAL RECEIVED	APPLY PAYMENT TO:
CHECK NUMBER	176 52	☐ TODAY'S SERVICE/SALE ☐ PREVIOUS BALANCE AS FOLLOWS

INVOICE #	AMOUNT $	INVOICE #	AMOUNT $
50116000000065	0797		

CARD NO. AMEX VISA MC EXP. DATE

LDR MESSAGE
LDR NOT REQ'D

MANIFEST CODE	SEQ #
DP	383

IN THE EVENT OF AN EMERGENCY CALL

I AGREE TO PAY THE ABOVE CHARGES AND TO BE BOUND BY THE TERMS AND CONDITIONS SET FORTH ABOVE AND ON THE REVERSE SIDE OF THIS DOCUMENT. PLEASE CHARGE MY ACCOUNT FOR THIS TRANSACTION UNLESS OTHERWISE INDICATED IN THE PAYMENT RECEIVED SECTION. THE INDIVIDUAL SIGNING THIS DOCUMENT IS DULY AUTHORIZED TO SIGN AND BIND CUSTOMER TO ITS TERMS.

"This is to certify that the above-named materials are properly classified, packaged, marked and labeled, and are in proper condition for transportation according to the applicable regulations of the Department of Transportation."

RAMIRO C. PIÑEIRO
Print Customer Name

By: _____
Customer's Authorized Representative

TOTAL CHARGE (FROM ABOVE)	
WASTE MIN. (FROM ABOVE)	
TOTAL DUE	176 52

DO NOT WRITE IN THE AREA BELOW

132559
3-097-02-2828-3

One Brickman Way
Elgin, Illinois 60123-7857
CUSTOMER NO.

WE CARE

DUNS NO. 05106-0408 FED. ID NO. 39-6090019

CUSTOMER

FOR SERVICE CALL	BRANCH MANAGER	DOC. EXP.	SCHEDULED SERVICE WEEK	SCHEDULED TERRITORY	REFERENCE NUMBER
305 684-0123	TIM SHOLL	01/24/98	97-4[illegible]	[illegible]	[illegible]

CREDIT CODE	PREVIOUS BALANCE	BAL. OVER 60 DAYS
C		

BUSINESS TYPE	CHAIN	OUTER COUNTY	SVC. P/C	PROD. P/C
[illegible]	NO	NO	311	[illegible]

LOCATION	TAX EXEMPTION NO.
7037[illegible]	

GENERATOR

3 - 0 7 7 - 0 2 - 2 8 2 8

RINKER- MIAMI TERMINAL TRA
1200 N.W. 137TH AVENUE
MIAMI FL 33182

BILL TO

SERVICE DATE	SALES REP NO.	CUSTOMER P.O. NUMBER	CUSTOMER PHONE #	TAX CODE	HANDLING CODE	ASSOC. CODE	SERVICE TAX	C.O.M.S. TAX	PRODUCT TAX
11/18/97	9555		305-221-[illegible]	1[illegible]-65-5169			.05	.53	.4[illegible]

DEPT	SERVICE/ PRODUCT	SERIAL NUMBER	REMARKS	QUAN.	CHARGE	SALES TAX	TOTAL CHARGE	WASTE MIN.	SOLVENT/DRUMS CLEAN	SPENT	# OF CONT.	SK DOT	CC	SERVICE TERM	CHANGE SERVICE TERM (WEEKS)	(INITIAL)	CHANGE SCH. DATE (YY WW)	INV. CODE	PROMO NO.	RELEASE NO.	MSDS GIVEN
00	30160	30179974		1	165.79	10.77	176.56	0.00			1	97		8							☐
																					☐
																					☐
																					☐
																					☐
																					☐
																					☐
																					☐
																					☐
																					☐
																					☐
																					☐
																					☐

PAYMENT TERM
NET 30 DAYS

PLEASE REMIT
8755 N.W. 95TH ST.
MEDLEY, FL 33178

WE CARE

TOTAL-SERVICE/PRODUCTS 165.79 10.77 176.56 0.00

CHECK APPROPRIATE BOXES →

	GOOD	POOR
MACHINE CONDITION & CLEANLINESS	☑	☐
LAMP ASSEMBLY CONDITION	☑	☐

	YES	NO
DECALS IN PLACE AND LEGIBLE	☐	☑
FUSIBLE LINK INSTALLED	☐	☑
EMERGENCY CLOSING OF LID UNOBSTRUCTED	☐	☑
MACHINE PROPERLY GROUNDED	☐	☑
LOCAL PHONE NO. STICKER AFFIXED TO MACHINE	☐	☑
SPENT SOLVENT MEETS ACCEPTANCE CRITERIA	☐	☑

MANIFEST NO.	USEPA TRANSPORTER ID NO.	GENERATOR USEPA ID NO.	GENERATOR STATE ID NO.
XXXXX	ILD984109202	FLD981758485	

11. US DOT DESCRIPTION (INCLUDING PROPER SHIPPING NAME, HAZARD CLASS, AND ID.)

WASTE COMBUSTIBLE LIQUID, N.O.S. (PETROLEUM NAPHTHA) NA1993
PGIII (D039,D008,D018,D040)(ERG#128)6.78/GAL

12. CONTAINERS NO.	TYPE	13. TOTAL QUANTITY	14. UNIT WT/VOL	SK DOT NUMBER	
1	DM	1	G	975	9660.55

I CERTIFY THAT MY TOTAL WASTE STREAMS ARE WITHIN ONE OF THE FOLLOWING CATEGORIES.

0 TO 220 LBS./MONTH — INITIALS

220 LBS. TO 2,200 LBS./MONTH — INITIALS

GREATER THAN 2,200 LBS./MONTH — INITIALS

DESIGNATED FACILITY NAME AND ADDRESS SAFETY-KLEEN CORP.
8755 NORTHWEST 95TH ST MEDLEY, FL 33178

USA EPA ID NO. FLD984172678
STATE ID NO.

SECTION RECEIPT

CASH ☐	TOTAL RECEIVED	APPLY PAYMENT TO:
CHECK NUMBER		☐ TODAY'S SERVICE/SALE ☐ PREVIOUS BALANCE AS FOLLOWS

INVOICE #	AMOUNT $	INVOICE #	AMOUNT $

40501160000006$ 0799

CREDIT CARD NO. 4000000068 AMEX VISA MC EXP. DATE 0799

LDR MESSAGE
LDR NOT REQ'D.

MANIFEST CODE	SEQ #
UP	463

IN THE EVENT OF AN EMERGENCY CALL
1-800-468-1760 (24 hours)

I AGREE TO PAY THE ABOVE CHARGES AND TO BE BOUND BY THE TERMS AND CONDITIONS SET FORTH ABOVE AND ON THE REVERSE SIDE OF THIS DOCUMENT. PLEASE CHARGE MY ACCOUNT FOR THIS TRANSACTION UNLESS OTHERWISE INDICATED IN THE PAYMENT RECEIVED SECTION. THE INDIVIDUAL SIGNING THIS DOCUMENT IS DULY AUTHORIZED TO SIGN AND BIND CUSTOMER TO ITS TERMS.

"This is to certify that the above-named materials are properly classified, packaged, marked and labeled, and are in proper condition for transportation according to the applicable regulations of the Department of Transportation."

Guillermo Mendez
Print Customer Name

By: [signature]
Customer's Authorized Representative

TOTAL CHARGE (FROM ABOVE)	
WASTE MIN. (FROM ABOVE)	
TOTAL DUE	

DO NOT WRITE IN THE AREA BELOW

THIS AGREEMENT CONTINUES ON THE REVERSE SIDE

SERVICE AND SALES ACKNOWLEDGMENT
PART 1366 (Rev. 8/97)

Road
/123-7857
STOMER NO.
- 0 9 7 - 0 2 - 2 8 2 8

WE CARE

DUNS NO. 05106-0408 FED. ID NO. 39-6090019

FOR SERVICE CALL	TRANSPORTER	DOC. EXP.	SCHEDULED SERVICE WEEK	SCHEDULED TERRITORY	REFERENCE NUMBER
305 884-0123	TIM SHOLL	10/04/97	97-32	17	634844

CREDIT CODE	PREV. BALANCE	BAL. OVER 60 DAYS
C		

BUSINESS TYPE	CHAIN	OUTER COUNTY	SVC. P/C	PROD. P/C
[illegible]	NO	NO	291	001

TAX EXEMPTION NUMBER

CUSTOMER

GENERATOR

RINKER- MIAMI TERMINAL TRA
1200 N.W. 137TH AVENUE
MIAMI FL 33182

BILL TO

SERVICE DATE	SALES REP NO.	CUSTOMER P.O. NUMBER	CUSTOMER PHONE #	TAX CODE	HANDLING CODE		ASSOC. CODE	SERVICE TAX	C.O.M.S. TAX	PRODUCT TAX
3/10/97	553		305-223-9200	10-065-5169				.065	.065	.06

DEPT	SERVICE/ PRODUCT	SERIAL NUMBER	REMARKS	QUAN.	CHARGE	SALES TAX	TOTAL CHARGE	WASTE MIN.	SOLVENT/DRUMS CLEAN	SPENT	# OF CONT.	SK DOT	CC	SERVICE TERM	CHANGE SERVICE TERM (WEEKS)(INITIAL)	CHANGE SCH. DATE (YY WW)	INV. CODE	PROMO NO.	RELEASE NO.	MSDS GIVEN
00	30150	30179994		1	157.75	10.25	168.00	0.00			1	725								

PAYMENT TERM
NET 30 DAYS

TOTAL-SERVICE/PRODUCTS		157.75	10.25	168.00	0.00

CHECK APPROPRIATE BOXES →

	GOOD	POOR
MACHINE CONDITION & CLEANLINESS	☐	☐
LAMP ASSEMBLY CONDITION	☐	☐

	YES	NO
DECALS IN PLACE AND LEGIBLE	☐	☐
FUSIBLE LINK INSTALLED	☐	☐
EMERGENCY CLOSING OF LID UNOBSTRUCTED	☐	☐
MACHINE PROPERLY GROUNDED	☐	☐
LOCAL PHONE NO. STICKER AFFIXED TO MACHINE	☐	☐
SPENT SOLVENT MEETS ACCEPTANCE CRITERIA	☐	☐

MANIFEST NO.	USEPA TRANSPORTER ID NO.	GENERATOR USEPA ID NO.	GENERATOR STATE ID NO.
XXXXX	ILD984708202	FLD981758485	

11. US DOT DESCRIPTION (INCLUDING PROPER SHIPPING NAME, HAZARD CLASS, AND ID.)
WASTE COMBUSTIBLE LIQUID, N.O.S. (PETROLEUM NAPHTHA) NA1993
PGIII (D039,D008,D018,D040)(ERG#128)6.7#/GAL

12. CONTAINERS NO.	TYPE	13. TOTAL QUANTITY	14. UNIT WT/VOL	SK DOT NUMBER
1	DM	16	G	725

I CERTIFY THAT MY TOTAL WASTE STREAMS ARE WITHIN ONE OF THE FOLLOWING CATEGORIES.
0 TO 220 LBS./MONTH — INITIALS
220 LBS. TO 2,200 LBS./MONTH — R.P. — INITIALS
GREATER THAN 2,200 LBS./MONTH — INITIALS

DESIGNATED FACILITY NAME AND ADDRESS
8755 NORTHWEST 95TH ST SAFETY-KLEEN CORP. MEDLEY, FL 33178

USA EPA ID NO. FLD984171679
STATE ID NO.

PAYMENT RECEIVED SECTION

CASH ☐
CHECK NUMBER
TOTAL RECEIVED
APPLY PAYMENT TO:
☐ TODAY'S SERVICE/SALE
☐ PREVIOUS BALANCE AS FOLLOWS

INVOICE #	AMOUNT $	INVOICE #	AMOUNT $

PREVIOUS CREDIT CARD NO. EXPIRED

CREDIT CARD NO. 5405011600000068
AMEX VISA MC
EXP. DATE 0799

CUSTOMER REFERENCE INFORMATION

LDR MESSAGE
LDR NOT REQ'D

MANIFEST CODE	SEQ #
DP	422

IN THE EVENT OF AN EMERGENCY CALL
1-800-468-1760 (24 hours)

I AGREE TO PAY THE ABOVE CHARGES AND TO BE BOUND BY THE TERMS AND CONDITIONS SET FORTH ABOVE AND ON THE REVERSE SIDE OF THIS DOCUMENT. PLEASE CHARGE MY ACCOUNT FOR THIS TRANSACTION UNLESS OTHERWISE INDICATED IN THE PAYMENT RECEIVED SECTION. THE INDIVIDUAL SIGNING THIS DOCUMENT IS DULY AUTHORIZED TO SIGN AND BIND CUSTOMER TO ITS TERMS.
"This is to certify that the above-named materials are properly classified, packaged, marked and labeled, and are in proper condition for transportation according to the applicable regulations of the Department of Transportation."

RAMIRO C. PINEIRO
Print Customer Name
By: [signature]
Customer's Authorized Representative

TOTAL CHARGE (FROM ABOVE)	
WASTE MIN. (FROM ABOVE)	
TOTAL DUE	168.00

634844

3-097-02-2828-2

THIS AGREEMENT CONTINUES ON THE REVERSE SIDE

SERVICE AND SALES ACKNOWLEDGMENT
PART 1366 (Rev. 5/97)

1000 North Randall Road
Elgin, Illinois 60123-7857

WE CARE

CUSTOMER ACCOUNT NO.

3	-	0	9	7	-	0	2	-	2	8	2	8

FOR SERVICE CALL	TRANSPORTER	DOC. EXP.	SCHEDULED SERVICE WEEK	SCHEDULED TERRITORY	REFERENCE NUMBER
305 884-0123	TIM SHOLL	08/09/97	97-24	17	209918

CREDIT CODE	PREV. BALANCE	BAL. OVER 60 DAYS
C		

BUSINESS TYPE	CHAIN	OUTER COUNTY	SVC. P/C	PROD. P/C
09	NO	NO	291	001

TAX EXEMPTION NUMBER

CUSTOMER

GENERATOR

RINKER- MIAMI TERMINAL TRA
1200 N.W. 137TH AVENUE
MIAMI FL 33182

BILL TO

SERVICE DATE	SALES REP NO.	CUSTOMER P.O. NUMBER	CUSTOMER PHONE #	TAX CODE	HANDLING CODE		ASSOC. CODE	SERVICE TAX	C.O.M.S. TAX	PRODUCT TAX
6-13-97	9553		305-223-9200	10-065-5159				.065	.065	.065

DEPT	SERVICE/ PRODUCT	SERIAL NUMBER	REMARKS	QUAN.	CHARGE	SALES TAX	TOTAL CHARGE	WASTE MIN.	SOLVENT/DRUMS CLEAN	SPENT	# OF CONT.	SK DOT	CO.	SERVICE TERM	CHANGE (VENDOR)	CHANGE SERV. TERM	CHG. DATE	CODE	INV.	PROMOTION NO.	RELEASE	NO.	MSDS GIVEN
00	30150	30179994		1	157.75	10.25	168.00	0.00			1	975											
TOTAL-SERVICE/PRODUCTS					157.75	10.25	168.00	0.00															

PAYMENT TERM
NET 30 DAYS

CHECK APPROPRIATE BOXES →

	GOOD	POOR
MACHINE CONDITION & CLEANLINESS	✓	
LAMP ASSEMBLY CONDITION		

	YES	NO
DECALS IN PLACE AND LEGIBLE	✓	
FUSIBLE LINK INSTALLED		
EMERGENCY CLOSING OF LID UNOBSTRUCTED		

	YES	NO
MACHINE PROPERLY GROUNDED		
LOCAL PHONE NO. STICKER AFFIXED TO MACHINE		
SPENT SOLVENT MEETS ACCEPTANCE CRITERIA	✓	

MANIFEST NO.	USEPA TRANSPORTER ID NO.	GENERATOR USEPA ID NO.	GENERATOR STATE ID NO.
XXXXX	ILD984908202	FLD981758485	

11. US DOT DESCRIPTION (INCLUDING PROPER SHIPPING NAME, HAZARD CLASS, AND ID.)
WASTE COMBUSTIBLE LIQUID, N.O.S. (PETROLEUM NAPHTHA) NA1993
PGIII (D039, D008, D018, D040)(ERG#128)6.7#/GAL

12. CONTAINERS NO.	TYPE	13. TOTAL QUANTITY	14. UNIT WT/VOL	SK DOT NUMBER
1	DM	10	G	975

I CERTIFY THAT MY TOTAL WASTE STREAMS ARE WITHIN ONE OF THE FOLLOWING CATEGORIES:
0 TO 220 LBS/MONTH INITIALS
220 LBS. TO 2,200 LBS/MONTH INITIALS
GREATER THAN 2,200 LBS/MONTH INITIALS

DESIGNATED FACILITY NAME AND ADDRESS SAFETY-KLEEN CORP.
8755 NORTHWEST 95TH ST MEDLEY, FL 33178

USA EPA ID NO. FLD 981 758 485
STATE ID NO.

RECEIPT SECTION

CASH ☐	TOTAL RECEIVED	APPLY PAYMENT TO:
CHECK NUMBER		☐ TODAY'S SERVICE/SALE ☐ PREVIOUS BALANCE AS FOLLOWS

INVOICE #	AMOUNT $	INVOICE #	AMOUNT $

5405011600000068 0797

CREDIT CARD NO. 1600000068 AMEX VISA MC EXP. DATE 07/97

LDR MESSAGE
LDR NOT REQ'D

MANIFEST CODE	SEQ #
DP	388

IN THE EVENT OF AN EMERGENCY CALL
1-800-468-1760 (24 hours)

I AGREE TO PAY THE ABOVE CHARGES AND TO BE BOUND BY THE TERMS AND CONDITIONS SET FORTH ABOVE AND ON THE REVERSE SIDE OF THIS DOCUMENT. PLEASE CHARGE MY ACCOUNT FOR THIS TRANSACTION UNLESS OTHERWISE INDICATED IN THE PAYMENT RECEIVED SECTION. THE INDIVIDUAL SIGNING THIS DOCUMENT IS DULY AUTHORIZED TO SIGN AND BIND CUSTOMER TO ITS TERMS.
"This is to certify that the above-named materials are properly classified, packaged, marked and labeled, and are in proper condition for transportation according to the applicable regulations of the Department of Transportation."

Guillermo A Mendez
Print Customer Name

By: [signature]
Customer's Authorized Representative

THIS AGREEMENT CONTINUES ON THE REVERSE SIDE

TOTAL CHARGE (FROM ABOVE)	
WASTE MIN. (FROM ABOVE)	
TOTAL DUE	168

209918

8-097-02-2828-3

SERVICE AND SALES ACKNOWLEDGMENT
PART 1066 (Rev. 2/97)

DUNS NO. 05106-0408 FED. ID NO. 39-6090019

FOR SERVICE CALL	TRANSPORTER	DOC. EXP.	SCHEDULED SERVICE WEEK	SCHEDULED TERRITORY	REFERENCE NUMBER
305 884-0123	TIM SHOLL	06/14/97	97-16	17	757318

CREDIT CODE	PREV. BALANCE	BAL. OVER 60 DAYS
C		

BUSINESS TYPE	CHAIN	OUTER COUNTY	SVC. P/C	PROD. P/C
09	NO	NO	291	001

TAX EXEMPTION NUMBER

CUSTOMER

9 7 - 0 2 - 2 8 2 8

TOR

NKER- MIAMI TERMINAL TRA
1200 N.W. 137TH AVENUE
MIAMI FL 33182

BILL TO

SERVICE DATE	SALES REP NO.	CUSTOMER P.O. NUMBER	CUSTOMER PHONE #	TAX CODE	HANDLING CODE		ASSOC. CODE	SERVICE TAX	C.O.M.S. TAX	PRODUCT TAX
4-17-97	9553		305-223-9200	10-065-5159				065	065	065

DEPT	SERVICE/ PRODUCT	SERIAL NUMBER	REMARKS	QUAN.	CHARGE	SALES TAX	TOTAL CHARGE	WASTE MIN.	SOLVENT/DRUMS CLEAN	SPENT	# OF CONT.	SK DOT	CC	SERVICE TERM	CHANGE SERVICE TERM (WEEKS)	(INITIAL)	CHANGE SCH. DATE (YY WW)	INV. CODE	PROMO NO.	RELEASE NO.	MSDS GIVEN
	003030030179994			1	~~143.25~~	~~9.31~~	~~152.56~~	~~0.00~~			1	10083		8							
	3150 30179994				157.58	10.24	167.82														
							167.82														
	TOTAL-SERVICE/PRODUCTS				143.25	9.31	152.56	0.00													

CHECK APPROPRIATE BOXES →

	GOOD	POOR		YES	NO		YES	NO
MACHINE CONDITION & CLEANLINESS	☐	☐	DECALS IN PLACE AND LEGIBLE	☐	☐	MACHINE PROPERLY GROUNDED	☐	☐
			FUSIBLE LINK INSTALLED	☐	☐	LOCAL PHONE NO. STICKER AFFIXED TO MACHINE	☐	☐
LAMP ASSEMBLY CONDITION	☐	☐	EMERGENCY CLOSING OF LID UNOBSTRUCTED	☐	☐	SPENT SOLVENT MEETS ACCEPTANCE CRITERIA	☐	☐

MANIFEST NO.	USEPA TRANSPORTER ID NO.	GENERATOR USEPA ID NO.	GENERATOR STATE ID NO.
XXXXX	ILD984908202	FLD981758485	

11. US DOT DESCRIPTION (INCLUDING PROPER SHIPPING NAME, HAZARD CLASS, AND ID.)

12. CONTAINERS NO.	TYPE	13. TOTAL QUANTITY	14. UNIT WT/VOL	SK DOT NUMBER
	DM		G	10083
		14	G	975

RQ WASTE COMBUSTIBLE LIQUID, N.O.S. (PETROLEUM NAPHTHA)
NA 1993 PGIII (D001) (D006, D008, D018, ~~D027, D039D040~~)(ERG#128)
WASTE COMBUSTIBLE LIQUID, N.O.S. (petroleum naphtha)
NA 1993 PG III (D001, D006, D039, D040) ERG#128

5163055

I CERTIFY THAT MY TOTAL WASTE STREAMS ARE WITHIN ONE OF THE FOLLOWING CATEGORIES:

0 TO 220 LBS./MONTH — INITIALS

220 LBS. TO 2,200 LBS./MONTH — INITIALS

GREATER THAN 2,200 LBS./MONTH — INITIALS

DESIGNATED FACILITY NAME AND ADDRESS SAFETY-KLEEN CORP.
8755 NORTHWEST 95TH ST MEDLEY, FL 33178

USA EPA ID NO. FLD984171694
STATE ID NO.

PAYMENT RECEIVED SECTION

CASH ☐	TOTAL RECEIVED	APPLY PAYMENT TO:
CHECK NUMBER		☐ TODAY'S SERVICE/SALE ☐ PREVIOUS BALANCE AS FOLLOWS

INVOICE #	AMOUNT $	INVOICE #	AMOUNT $

PREVIOUS CREDIT CARD NO. → 5405011600000068 0797

CREDIT CARD NO. 5405011600000068 AMEX VISA MC EXP. DATE 0797

CUSTOMER REFERENCE INFORMATION

LDR MESSAGE
LDR NOT REQ'D

MANIFEST CODE	SEQ #
DP	2 D

IN THE EVENT OF AN EMERGENCY CALL 1-800-468-1760 (24 hours)

I AGREE TO PAY THE ABOVE CHARGES AND TO BE BOUND BY THE TERMS AND CONDITIONS SET FORTH ABOVE AND ON THE REVERSE SIDE OF THIS DOCUMENT. PLEASE CHARGE MY ACCOUNT FOR THIS TRANSACTION UNLESS OTHERWISE INDICATED IN THE PAYMENT RECEIVED SECTION. THE INDIVIDUAL SIGNING THIS DOCUMENT IS DULY AUTHORIZED TO SIGN AND BIND CUSTOMER TO ITS TERMS.

"This is to certify that the above-named materials are properly classified, packaged, marked and labeled, and are in proper condition for transportation according to the applicable regulations of the Department of Transportation."

Guillermo A MENDEZ
Print Customer Name

By: "Bill"
Customer's Authorized Representative

TOTAL CHARGE (FROM ABOVE)	
WASTE MIN. (FROM ABOVE)	
TOTAL DUE	$167.82

757318 $168.00

3-097-02-2828-3

THIS AGREEMENT CONTINUES ON THE REVERSE SIDE

SERVICE AND SALES ACKNOWLEDGMENT

safety-kleen.
1000 North Randall Road
Elgin, Illinois 60123-7857

WE CARE

FOR SERVICE CALL 305 884-0123

TRANSPORTER TIM SHOLL

DOC EXP 04/19/97

SCHEDULED SERVICE WEEK	SCHEDULED TERRITORY
97-08	17

CREDIT CODE	PREV. BALANCE	BAL. OVE

BUSINESS TYPE	CHAIN	OUTER COUNTY	SVC. P/C	PRO
09	NO	NO	621	001

TAX EXEMPTION NUMBER

GENERATOR
3-097-02-2828-3
RINKER- MIAMI TERMINAL TRA
1200 N.W. 137TH AVENUE
MIAMI FL 33182

BILL TO

SERVICE DATE	SALES REP NO.	CUSTOMER P.O. NUMBER	CUSTOMER PHONE #	TAX CODE	HANDLING CODE		ASSOC. CODE	SERVICE TAX	C.O.M.S. TAX	PRODUCT TAX
2/20/97	0553		305-223-9200	10-065-5159				.065	.065	.065

DEPT	SERVICE/ PRODUCT	SERIAL NUMBER	REMARKS	QUAN.	CHARGE	SALES TAX	TOTAL CHARGE	WM DISCOUNT	SOLVENT CLEAN	SOLVENT SPENT	SOLVENT # OF CONT.	SOLVENT SK DOT	CC	SERVICE TERM	CHANGE SERVICE TERM (WEEKS)	CHANGE SERVICE TERM (INITIAL)	CHANGE SCH. DATE (YY WW)	INV. CODE	PROMO NO.	RELEASE NO.	MSDS GIVEN
00	303000	30179994		1	75.75	4.92	80.67	0.00			1	10083		8							☐
																					☐
																					☐
																					☐
																					☐
																				WE CARE	☐
																					☐
																					☐
																					☐
																					☐
																					☐
TOTAL-SERVICE/PRODUCTS					75.75	4.92	80.67	0.00													

CHECK APPROPRIATE BOXES →

	GOOD	POOR		YES	NO		YES	NO
MACHINE CONDITION & CLEANLINESS	☐	☐	DECALS IN PLACE AND LEGIBLE	☐	☐	MACHINE PROPERLY GROUNDED	☐	☐
LAMP ASSEMBLY CONDITION	☐	☐	FUSIBLE LINK INSTALLED	☐	☐	LOCAL PHONE NO. STICKER AFFIXED TO MACHINE	☐	☐
			EMERGENCY CLOSING OF LID UNOBSTRUCTED	☐	☐	SPENT SOLVENT MEETS ACCEPTANCE CRITERIA	☐	☐

MANIFEST NO.	USEPA TRANSPORTER ID NO.	GENERATOR USEPA ID NO.	GENERATOR STATE ID NO.
XXXXX	ILD984908202	FLD981758485	

11. US DOT DESCRIPTION (INCLUDING PROPER SHIPPING NAME, HAZARD CLASS, AND ID.)

RQ WASTE COMBUSTIBLE LIQUID,N.O.S. (PETROLEUM NAPHTHA)
NA1993 PGIII(D001) (D006,D008,D018,D027,D039D040)(ERG#128)

12. CONTAINERS NO.	TYPE	13. TOTAL QUANTITY	14. UNIT WT/VOL	SK DOT NUMBER
1	DM	16	G	10083

5163055

I CERTIFY THAT MY TOTAL WASTE STREAMS ARE WITHIN ONE OF THE FOLLOWING CATEGORIES.

0 TO 220 LBS./MONTH — INITIALS

220 LBS. TO 2,200 LBS./MONTH — INITIALS

GREATER THAN 2,200 LBS./MONTH — INITIALS

DESIGNATED FACILITY NAME AND ADDRESS
SAFETY-KLEEN CORP.
8755 NORTHWEST 95TH ST MEDLEY, FL 33178

USA EPA ID NO. FLD984171694
STATE ID NO.

PAYMENT RECEIVED SECTION

CASH ☐ TOTAL RECEIVED
CHECK NUMBER

APPLY PAYMENT TO:
☐ TODAY'S SERVICE/SALE
☐ PREVIOUS BALANCE AS FOLLOWS

INVOICE #	AMOUNT $	INVOICE #	AMOUNT $

PREVIOUS CREDIT CARD NO → 5405011600000068 0797

CREDIT CARD NO. 5405011600000068 AMEX VISA MC EXP. DATE 0797

CUSTOMER REFERENCE INFORMATION

LDR MESSAGE
LDR NOT REQ'D

MANIFEST CODE	SEQ #
DP	394

IN THE EVENT OF AN EMERGENCY CALL
1-800-468-1760 (24 hours)

I AGREE TO PAY THE ABOVE CHARGES AND TO BE BOUND BY THE TERMS AND CONDITIONS SET FORTH ABOVE AND ON THE REVERSE SIDE OF THIS DOCUMENT. PLEASE CHARGE MY ACCOUNT FOR THIS TRANSACTION UNLESS OTHERWISE INDICATED IN THE PAYMENT RECEIVED SECTION. THE INDIVIDUAL SIGNING THIS DOCUMENT IS DULY AUTHORIZED TO SIGN AND BIND CUSTOMER TO ITS TERMS.

"This is to certify that the above-named materials are properly classified, packaged, marked and labeled, and are in proper condition for transportation according to the applicable regulations of the Department of Transportation."

RAMIR. C. PINEIRO
Print Customer Name

By: Customer's Authorized Representative

TOTAL CHARGE (FROM ABOVE)	
WM DISCOUNT (FROM ABOVE)	
TOTAL DUE	80 67

111714

3-097-02-2828-3

THIS AGREEMENT CONTINUES ON THE REVERSE SIDE

SERVICE AND SALES ACKNOWLEDGMENT
PART 1366 (Rev. 6/96)

DUNS NO. 05106-0408 FED. ID NO. 39-6090019

safety-kleen

1000 North Randall Road
Elgin, Illinois 60123-7857

WE CARE

FOR SERVICE CALL 305 884-0123

TRANSPORTER TIM SHOLL

DOC EXP 02/22/97

SCHEDULED SERVICE WEEK	SCHEDULED TERRITORY	REFERENCE NUMBER
96-52	17	716637

CREDIT CODE	PREV. BALANCE	BAL. OVER 60 DAYS
C		

BUSINESS TYPE	CHAIN	OUTER COUNTY	SVC. P/C	PROD. P/C
09	NO	NO	621	001

TAX EXEMPTION NUMBER

CUSTOMER

GENERATOR
3-097-02-2828-3
RINKER- MIAMI TERMINAL TRA
1200 N.W. 137TH AVENUE
MIAMI FL 33182

BILL TO

SERVICE DATE	SALES REP NO.	CUSTOMER P.O. NUMBER	CUSTOMER PHONE #	TAX CODE	HANDLING CODE		ASSOC. CODE	SERVICE TAX	C.O.M.S. TAX	PRODUCT TAX
12/17/96	9553		305-223-9200	10-065-5159				.065	.065	.065

DEPT	SERVICE/ PRODUCT	SERIAL NUMBER	REMARKS	QUAN.	CHARGE	SALES TAX	TOTAL CHARGE	WM DISCOUNT	SOLVENT CLEAN	SOLVENT SPENT	SOLVENT # OF CONT.	SOLVENT SK DOT	CC	SERVICE TERM	CHANGE SERVICE TERM (WEEKS)	(INITIAL)	CHANGE SCH. DATE (YY WW)	INV. CODE	PROMO NO.	RELEASE NO.	MSDS GIVEN
1	00	30300	59179994		1	75.75	4.92	80.67	0.00			1	585		8						
2																					
3																					
4																					
5																					
6																					
7																					
8																					
9																					
10																					
11																					
12																					
	TOTAL-SERVICE/PRODUCTS				75.75	4.92	80.67	0.00													

WE CARE

CHECK APPROPRIATE BOXES →

	GOOD	POOR
MACHINE CONDITION & CLEANLINESS	✓	
LAMP ASSEMBLY CONDITION	✓	

	YES	NO
DECALS IN PLACE AND LEGIBLE	✓	
FUSIBLE LINK INSTALLED	✓	
EMERGENCY CLOSING OF LID UNOBSTRUCTED	✓	
MACHINE PROPERLY GROUNDED	✓	
LOCAL PHONE NO. STICKER AFFIXED TO MACHINE	✓	
SPENT SOLVENT MEETS ACCEPTANCE CRITERIA	✓	

MANIFEST NO.	USEPA TRANSPORTER ID NO.	GENERATOR USEPA ID NO.	GENERATOR STATE ID NO.
XXXXX	ILD984908202	FLD981758485	

11. US DOT DESCRIPTION (INCLUDING PROPER SHIPPING NAME, HAZARD CLASS, AND ID.)	12. CONTAINERS NO.	TYPE	13. TOTAL QUANTITY	14. UNIT WT/VOL	SK DOT NUMBER
A. RQ WASTE COMBUSTIBLE LIQUID, N.O.S. (PETROLEUM NAPHTHA) NA1993 PG III (D001) (D006, D008, D018, D035, D039 D040) (ERG#128)	1	DM		G	585
B. Waste Combustible Liquid, N.O.S (Petroleum Naphtha) NA1993 PG III (D039, D006, D018, D040) (ERG #128) 6.7#/gal	1	DM	14	G	975
C.					
D.					

5 16 30 55

I CERTIFY THAT MY TOTAL WASTE STREAMS ARE WITHIN ONE OF THE FOLLOWING CATEGORIES.

0 TO 220 LBS./MONTH — R.P. INITIALS

220 LBS. TO 2,200 LBS./MONTH — INITIALS

GREATER THAN 2,200 LBS./MONTH — INITIALS

DESIGNATED FACILITY NAME AND ADDRESS
SAFETY-KLEEN CORP.
8755 NORTHWEST 95TH ST MEDLEY, FL 33178

USA EPA ID NO. FLD984171694

STATE ID NO.

PAYMENT RECEIVED SECTION

CASH ☐
CHECK NUMBER

TOTAL RECEIVED

APPLY PAYMENT TO:
☐ TODAY'S SERVICE/SALE
☐ PREVIOUS BALANCE AS FOLLOWS

INVOICE #	AMOUNT $	INVOICE #	AMOUNT $

0000068 0797

AMEX VISA MC EXP. DATE

LDR MESSAGE
LDR NOT REQ'D

MANIFEST CODE	SEQ #
DP	410

IN THE EVENT OF AN EMERGENCY CALL
1-800-468-1760 (24 hours)

I AGREE TO PAY THE ABOVE CHARGES AND TO BE BOUND BY THE TERMS AND CONDITIONS SET FORTH ABOVE AND ON THE REVERSE SIDE OF THIS DOCUMENT. PLEASE CHARGE MY ACCOUNT FOR THIS TRANSACTION UNLESS OTHERWISE INDICATED IN THE PAYMENT RECEIVED SECTION. THE INDIVIDUAL SIGNING THIS DOCUMENT IS DULY AUTHORIZED TO SIGN AND BIND CUSTOMER TO ITS TERMS.

This is to certify that the above-named materials are properly classified, packaged, marked and labeled, and are in proper condition for transportation according to the applicable regulations of the Department of Transportation.

RAMIROCO PINEIRO
Print Customer Name

By: _____
Customer's Authorized Representative

TOTAL CHARGE (FROM ABOVE)	
WM DISCOUNT (FROM ABOVE)	
TOTAL DUE	80.67

USA 716637

USA 716637

THIS AGREEMENT CONTINUES ON THE REVERSE SIDE

SERVICE AND SALES ACKNOWLEDGMENT

CUSTOMER

1000 North Randall Road
Elgin, Illinois 60123-7857

WE CARE

FOR SERVICE CALL

DUNS NO. 05106-0408 FED. ID NO. 39-6090019

TRANSPORTER
305 884-0123 TIM SHELL

3-037-42-2828-3
KINKER- MIAMI TERMINAL TRA
1200 N.W. 137TH AVENUE
MIAMI FL 33182

BILL TO

DEPARTMENT	SCHEDULED SERVICE WEEK	SCHEDULED TERRITORY	REFERENCE NUMBER
	96-12	17	986108

CREDIT CODE	PREV. BALANCE	BAL. OVER 60 DAYS
C		

BUSINESS TYPE	CHAIN	OUTER COUNTY	SVC. P/C	PROD. P/C
09	NO	NO	621	001

TAX EXEMPTION NUMBER

SERVICE DATE	SALES REP NO.	CUSTOMER P.O. NUMBER	CUSTOMER PHONE #	TAX CODE	HANDLING CODE		ASSOC. CODE	SERVICE TAX	C.O.M.S. TAX	PRODUCT TAX
30-96	4267		305-223-9200	10-065-5159				.065	.065	.065

INVOICE SERIAL NUMBER	REMARKS	QUAN.	CHARGE	SALES TAX	TOTAL CHARGE	WM DISCOUNT	SOLVENT CLEAN	SOLVENT SPENT	SOLVENT # OF CONT.	SOLVENT SK DOT	CC	SERVICE TERM	CHANGE SERVICE TERM (WEEKS)	(INITIAL)	CHANGE SCH. DATE (YY WW)	INV. CODE	PROMO NO.	RELEASE NO.
33083143		1	282.00	18.33	300.33	45.05	17	19	1	975		16						
TOTAL-SERVICE/PRODUCTS			282.00	18.33	300.33	45.05												

CHECK APPROPRIATE BOXES →

	GOOD	POOR
MACHINE CONDITION & CLEANLINESS		
LAMP ASSEMBLY CONDITION		

	YES	NO
DECALS IN PLACE AND LEGIBLE		
FUSIBLE LINK INSTALLED		
EMERGENCY CLOSING OF LID UNOBSTRUCTED		

	YES	NO
MACHINE PROPERLY GROUNDED		
LOCAL PHONE NO. STICKER AFFIXED TO MACHINE		
SPENT SOLVENT MEETS ACCEPTANCE CRITERIA		

MANIFEST NO.	USEPA TRANSPORTER ID NO.	GENERATOR USEPA ID NO.	GENERATOR STATE ID NO.
XXXXX	ILD984968202	FLD981758485	

11. US DOT DESCRIPTION (INCLUDING PROPER SHIPPING NAME, HAZARD CLASS, AND ID.)
WASTE COMBUSTIBLE LIQUID, N.O.S. (PETROLEUM NAPHTHA)
NA1993 PGIII (D039,D008,D018,D040)(ERG#27)6.7#/GAL

12. CONTAINERS NO.	TYPE	13. TOTAL QUANTITY	14. UNIT WT/VOL	SK DOT NUMBER
1	DM	14	G	975

5 16 30 55

I CERTIFY THAT MY TOTAL WASTE STREAMS ARE WITHIN ONE OF THE FOLLOWING CATEGORIES.
0 TO 220 LBS./MONTH — INITIALS: IA
220 LBS. TO 2,200 LBS./MONTH — INITIALS
GREATER THAN 2,200 LBS./MONTH — INITIALS

DESIGNATED FACILITY NAME AND ADDRESS
SAFETY-KLEEN CORP.
8755 NORTHWEST 95TH ST MEDLEY, FL 33178

USA EPA ID NO. FLD984171694
STATE ID NO.

PAID RECEIPT SECTION

CASH ☐	TOTAL RECEIVED	APPLY PAYMENT TO:
CHECK NUMBER	300.33	☒ TODAY'S SERVICE/SALE ☐ PREVIOUS BALANCE AS FOLLOWS

INVOICE #	AMOUNT $	INVOICE #	AMOUNT $

5405011600000068 0797
CREDIT CARD NO. DAME
AMEX VISA MC
EXP. DATE

LDR MESSAGE
LDR NOT REQ'D

MANIFEST CODE	SEQ #
DP	308

IN THE EVENT OF AN EMERGENCY CALL 1-800-468-1760 (24 hours)

CHARGE MY ACCOUNT FOR THIS TRANSACTION UNLESS OTHERWISE INDICATED IN THE PAYMENT RECEIVED SECTION. THE RECLAMATION AGREEMENT, ADDITIONAL TERMS AND CONDITIONS, AND OTHER INFORMATION APPEARING ON THE REVERSE SIDE ARE MADE A PART HEREOF.
"This is to certify that the above-named materials are properly classified, described, packaged, marked, and labeled, and are in proper condition for the transportation according to the applicable regulations of the Department of Transportation."

Print Name ISAAC ROBINSON
X Isaac Robinson
GENERATOR/DESIGNATED REPRESENTATIVE SIGNATURE

TOTAL CHARGE (FROM ABOVE)	
WM DISC	
TOTAL DUE	~~300.33~~ $ 219.12

SEE REVERSE SIDE FOR IMPORTANT INFORMATION

(Rev. 12/95)

CUSTOMER

SERVICE AND SALES ACKNOWLEDGMENT

20-5033

safety-kleen corp.

BOX 1800
Elgin, IL 60121
DUNS No. 05106-0408
FED. ID NO. 39-6090019

DUPLICATE INVOICE

INVOICE NUMBER: 095406
INVOICE AMOUNT: .00
PAGE 1 OF 1

LOCATION #	ACCOUNT NUMBER	CUSTOMER ORDER NO	RELEASE NO	INVOICE NO
3-097-02	3-097-02-2828-3			095406

VENDOR #	TAX STATUS/NUMBER	SERVICE DATE	INVOICE DATE	PAY INVOICE BY
		9-06-96	9-06-96	9-16-96

BILL TO

RINKER- MIAMI TERMINAL TRA
1200 N.W. 137TH AVENUE
MIAMI, FL 33182

SERVICE ADDRESS

FOR INFORMATION PLEASE CALL SK SERVICING LOCATION: MEDLEY, FL (305)884-0123

CUSTOMER ITEM #	DESCRIPTION	INT WEEK	QUANTITY	UOM	UNIT COST	TAX	ITEM TOTAL
	MACH/SOLVENT SERVICE 30300-30179994	8	1	EA	75.75	4.92	80.67
09-06-96	PAYMENT						80.67-
	INVOICE TOTAL						.00

DUNS NO. 05106-0408 FED. ID NO. 39-6090019

North Randall Road
Elgin, Illinois 60123-7857

WE CARE

FOR SERVICE CALL 305 884-0123

TRANSPORTER TIM SHOLL

SCHEDULED SERVICE WEEK	SCHEDULED TERRITORY	REFERENCE NUMBER
96-44	17	346781

CREDIT CODE	PREV. BALANCE	BAL. OVER 60 DAYS
C		

BUSINESS TYPE	CHAIN	OUTER COUNTY	SVC. P/C	PROD. P/C
09	NO	NO	621	001

TAX EXEMPTION NUMBER

CUSTOMER

GENERATOR
3-097-02-2828-3
RINKER- MIAMI TERMINAL TRA
1200 N.W. 137TH AVENUE
MIAMI FL 33182

BILL TO

SERVICE DATE	SALES REP NO.	CUSTOMER P.O. NUMBER	CUSTOMER PHONE #	TAX CODE	HANDLING CODE	ASSOC. CODE	SERVICE TAX	C.O.M.S. TAX	PRODUCT TAX
10/31/96	9553		305-223-9200	10-065-5159			.065	.065	.065

DEPT	SERVICE/ PRODUCT	SERIAL NUMBER	REMARKS	QUAN.	CHARGE	SALES TAX	TOTAL CHARGE	WM DISCOUNT	SOLVENT CLEAN	SOLVENT SPENT	SOLVENT # OF CONT.	SOLVENT SK DOT	CC	SERVICE TERM	CHANGE SERVICE TERM (WEEKS)	(INITIAL)	CHANGE SCH. DATE (YY WW)	INV. CODE	PROMO NO.	RELEASE NO.	MSDS GIVEN
00	30300	30179994		1	75.75	4.92	80.67	0.00			1	585		8							
					30-70																
					16-5																
	TOTAL-SERVICE/PRODUCTS				75.75	4.92	80.67	0.00													

CHECK APPROPRIATE BOXES →

	GOOD	POOR
MACHINE CONDITION & CLEANLINESS		
LAMP ASSEMBLY CONDITION	✓	

	YES	NO
DECALS IN PLACE AND LEGIBLE	✓	
FUSIBLE LINK INSTALLED		
EMERGENCY CLOSING OF LID UNOBSTRUCTED	✓	

	YES	NO
MACHINE PROPERLY GROUNDED	✓	
LOCAL PHONE NO. STICKER AFFIXED TO MACHINE	✓	
SPENT SOLVENT MEETS ACCEPTANCE CRITERIA	✓	

MANIFEST NO.	USEPA TRANSPORTER ID NO.	GENERATOR USEPA ID NO.	GENERATOR STATE ID NO.
XXXXX	ILD984908202	FLD981758485	

11. US DOT DESCRIPTION (INCLUDING PROPER SHIPPING NAME, HAZARD CLASS, AND ID.)

	12. CONTAINERS NO.	TYPE	13. TOTAL QUANTITY	14. UNIT WT/VOL	SK DOT NUMBER
A. RQ WASTE COMBUSTIBLE LIQUID,N.O.S.,(PETROLEUM NAPHTHA) NA 1993 PGIII(D001) (D006,D008,D018,D035,D039D040)(ERG#128)	1	DM	15	G	585
B.					
C.					
D.					

516 3035

I CERTIFY THAT MY TOTAL WASTE STREAMS ARE WITHIN ONE OF THE FOLLOWING CATEGORIES.

0 TO 220 LBS./MONTH R.P. INITIALS

220 LBS. TO 2,200 LBS./MONTH INITIALS

GREATER THAN 2,200 LBS./MONTH INITIALS

USA EPA ID NO. FLD984171694

STATE ID NO.

DESIGNATED FACILITY NAME AND ADDRESS SAFETY-KLEEN CORP.
8755 NORTHWEST 95TH ST MEDLEY, FL 33178

PAYMENT RECEIVED SECTION

CASH ☐
CHECK NUMBER

TOTAL RECEIVED $80.67

APPLY PAYMENT TO:
☐ TODAY'S SERVICE/SALE
☐ PREVIOUS BALANCE AS FOLLOWS

INVOICE #	AMOUNT $	INVOICE #	AMOUNT $

PREVIOUS CREDIT CARD NO →

CREDIT CARD NO. 6445011160000068 AMEX VISA MC EXP. DATE 0799

LDR MESSAGE
LDR NOT REQ'D

MANIFEST CODE	SEQ #
DP	403

IN THE EVENT OF AN EMERGENCY CALL 1-800-468-1760 (24 hours)

I AGREE TO PAY THE ABOVE CHARGES AND TO BE BOUND BY THE TERMS AND CONDITIONS SET FORTH ABOVE AND ON THE REVERSE SIDE OF THIS DOCUMENT. PLEASE CHARGE MY ACCOUNT FOR THIS TRANSACTION UNLESS OTHERWISE INDICATED IN THE PAYMENT RECEIVED SECTION. THE INDIVIDUAL SIGNING THIS DOCUMENT IS DULY AUTHORIZED TO SIGN AND BIND CUSTOMER TO ITS TERMS.

"This is to certify that the above-named materials are properly classified, packaged, marked and labeled, and are in proper condition for transportation according to the applicable regulations of the Department of Transportation."

RAMIRO PINEIRO
Print Customer Name

By: Customer's Authorized Representative

TOTAL CHARGE (FROM ABOVE)	
WM DISCOUNT (FROM ABOVE)	
TOTAL DUE	80.67

USA 346781

USA 346781

SERVICE AND SALES ACKNOWLEDGMENT

THIS AGREEMENT CONTINUES ON THE REVERSE SIDE

dall Road
60123-7857

WE CARE

DUNS NO. 05106-0408 FED. ID NO. 39-6090019

MACHINE PLACEMENT FORM

P 72361

BRANCH 3-077-02

GENERATOR/LOCATION

R-MIAMI TERMINAL TRA

ON/ATTENTION LINE 200 NW 137 TH AVE

Y & STATE MIAMI FL

ZIP 33182-

TAX CODE

USA EPA ID NO.

STATE ID NO.

BILL TO (IF DIFFERENT FROM LOCATION)

NAME

DELIVERY ADDRESS

INFORMATION/ATTENTION LINE

CITY & STATE

ZIP -

TAX CODE

MANIFEST NUMBER

MACHINE PLACEMENT

DATE PLACED 7/5/96

SERVICE NO.	SERIAL NO.	INV. CODE	CHARGE	TAX	TOTAL	SERVICE TERM	MSDS GIVEN	NEXT SERVICE	PLCMT CODE SEE BELOW	FREE TRIAL	REMARKS
30200	301-79994		75.75	4.92	80.67	8	☐	96-36			
							☐		PLACE		
							☐				
							☐		CODE G		
							☐				
							☐				
TOTAL					80.67						

I hereby acknowledge placement of the machine(s) described herein and having read the directions for use on the reverse side. I further acknowledge reading and do accept the terms and conditions of this machine placement and solvent reclamation agreement as well as the additional Terms and Conditions appearing on the reverse side hereof, all of which are hereby incorporated into and made a part hereof.

GENERATOR / CUSTOMER'S SIGNATURE → X

REFUSED SERVICE EXPLAIN

PLACEMENT CODES
(1) NEW APPLICATION
(2) REPLACE DEFECTIVE MACHINE
(3) REPLACE COMPETITIVE MACHINE
(4) REPLACE HOME MADE VAT
(5) ADDITIONAL MACHINE

MACHINE CONFIRMATION

DATE OF CONFIRMATION	SALES REP. NO.	SALES SPECIALIST	BUSINESS TYPE	BLITZ CODE	P/W TAX %	C.O.M.S. TAX %	PROD. TAX %	CHAIN	SVC P/S	PROD P/S
7-5-96	4268		2828		6.5	6.5	6.5			

CUSTOMER'S P.O. NUMBER ☐ BLANKET ☐ TEMPORARY

SALES TAX EXEMPTION NO.

GENERATOR/CUSTOMER TELEPHONE NUMBER AREA CODE 305-223-9200

SPECIAL HANDLING

CREDIT CODE

WASTE INFORMATION SECTION

USEPA TRANSPORTER ID # CORPORATE ILD984908202

BRANCH

GENERATOR USEPA ID NO.

GENERATOR STATE ID NO.

11.US DOT DESCRIPTION (INCLUDING PROPER SHIPPING NAME, HAZARD CLASS, AND ID.)		12. CONTAINERS NO.	TYPE	13. TOTAL QUANTITY	14.UNIT WT/VOL	SK DOT NUMBER
Waste Combustible Liquid, N.O.S. (Petroleum Naphtha) NA1993 PGIII (D001, D006, D008, D018, D035, D039, D040) (ERG #27)	SSPW AND/OR 16 GAL. DRUMS					501
RQ Waste Combustible Liquid, N.O.S. (Petroleum Naphtha) NA1993 PGIII (D001, D006, D008, D018, D035, D039, D040) (ERG #27)	30 GAL. DRUMS	2		8		585
Waste Compounds, Cleaning Liquid, (Monoethanolamine) 8,NA1760 PGIII (D006, D008, D018, D021, D027, D035, D039, D040) (ERG #60)	PRODUCT NO. 699					566
Combustible Liquid, N.O.S. (Petroleum Naphtha) NA1993 PGIII (ERG #27) (NOT USEPA REGULATED)						557

I certify that my total waste streams are within one of the following categories:

0 TO 220 LBS./MONTH ____ INITIALS

220 LBS. TO 2,200 LBS./MONTH ____ INITIALS

GREATER THAN 2,200 LBS./MONTH ____ INITIALS

SPENT SOLVENT MEETS ACCEPTANCE CRITERIA ☐ ☐

DESIGNATED FACILITY NAME AND ADDRESS: SAFETY-KLEEN CORP.
8755 NW 95 ST MEDLEY FL 33178

USA EPA ID NO. FLD984171674

STATE ID NO.

PRODUCT SALES SECTION

PRODUCT NUMBER	DESCRIPTION	MSDS GIVEN	DEALER PRICE	UNIT OF MEASURE	QUANTITY DELIVERED	SALE AMOUNT	TAX	LINE TOTAL
		☐						
	WE CARE	☐						
		☐						
		☐						
					TOTAL PRODUCTS AMOUNTS			

PAYMENT RECEIVED SECTION

CASH ☐ CHECK NUMBER

TOTAL RECEIVED 80.67

APPLY PAYMENT TO:
☑ TODAYS SERVICE/SALE
☐ PREVIOUS BALANCE AS FOLLOWS

INV. # ____ AMOUNT $ 80.67

CHARGE MY ACCOUNT FOR THIS TRANSACTION UNLESS OTHERWISE INDICATED IN THE PAYMENT RECEIVED SECTION. THE RECLAMATION AGREEMENT, ADDITIONAL TERMS AND CONDITIONS, AND OTHER INFORMATION APPEARING ON THE REVERSE SIDE ARE MADE A PART HEREOF.

TOTAL MACHINE SERVICE AMOUNT (INCLUDING TAX)

TOTAL DUE 80.67

PREVIOUS CREDIT CARD NO.

CREDIT CARD NO. 7[illegible]

AMEX VISA MC EXP. DATE 07/97

"This is to certify that the above-named materials are properly classified, described, packaged, marked and labeled, and are in proper condition for transportation according to the applicable regulations of the Department of Transportation."

PRINT NAME X

GENERATOR/DESIGNATED REPRESENTATIVE SIGNATURE

CONSUMER REFERENCE

SEE REVERSE SIDE FOR IMPORTANT INFORMATION

CUSTOMER'S COPY

PART NO. 1323 (11/94)

1000 North Randall Road
Elgin, Illinois 60123-7857

WE CARE

FOR SERVICE CALL

DUNS NO. 05106-0408 FED. ID NO. 39-6090019

TRANSPORTER
305 884-0123 TIM SHOLL

SCHEDULED SERVICE WEEK	SCHEDULED TERRITORY	REFERENCE NUMBER
96-28	17	069738

CREDIT CODE	PREV. BALANCE	BAL. OVER 60 DAYS
C		

BUSINESS TYPE	CHAIN	OUTER COUNTY	SVC. P/C	PROD. P/C
09	NO	NO	621	001

TAX EXEMPTION NUMBER

CUSTOMER

GENERATOR
3-097-02-2828-3
RINKER- MIAMI TERMINAL TRA
1200 N.W. 137TH AVENUE
MIAMI FL 33182

BILL TO

SERVICE DATE	SALES REP NO.	CUSTOMER P.O. NUMBER	CUSTOMER PHONE #	TAX CODE	HANDLING CODE	ASSOC. CODE	SERVICE TAX	C.O.M.S. TAX	PRODUCT TAX
7-5-96	4268		305-223-9200	10-065-5159			.065	.065	.065

	DEPT	SERVICE/ PRODUCT	SERIAL NUMBER	REMARKS	QUAN.	CHARGE	SALES TAX	TOTAL CHARGE	WM DISCOUNT	SOLVENT CLEAN	SOLVENT SPENT	SOLVENT # OF CONT	SOLVENT SK DOT	CC	SERVICE TERM	CHANGE SERVICE TERM (WEEKS)	(INITIAL)	CHANGE SCH. DATE (YY WW)	INV. CODE	PROMO NO.	RELEASE NO.
1	00	331	50330801 43		1	205.75	13.37	219.12	32.87			1	975		16						
2																					
3																					
4																					
5																					
6																					
7																					
8																					
9																					
10																					
11																					
12																					

PULL CODE 4
PICKUP UNIT

TOTAL-SERVICE/PRODUCTS		205.75	13.37	219.12	32.87

CHECK APPROPRIATE BOXES →

	GOOD	POOR		YES	NO		YES	NO
MACHINE CONDITION & CLEANLINESS	☐	☐	DECALS IN PLACE AND LEGIBLE	☐	☐	MACHINE PROPERLY GROUNDED	☐	☐
LAMP ASSEMBLY CONDITION	☐	☐	FUSIBLE LINK INSTALLED	☐	☐	LOCAL PHONE NO. STICKER AFFIXED TO MACHINE	☐	☐
			EMERGENCY CLOSING OF LID UNOBSTRUCTED	☐	☐	SPENT SOLVENT MEETS ACCEPTANCE CRITERIA	☐	☐

MANIFEST NO.	USEPA TRANSPORTER ID NO.	GENERATOR USEPA ID NO.	GENERATOR STATE ID NO.
XXXXX	ILD984908202	FLD981758485	

11. US DOT DESCRIPTION (INCLUDING PROPER SHIPPING NAME, HAZARD CLASS, AND ID.)

		12. CONTAINERS NO.	TYPE	13. TOTAL QUANTITY	14. UNIT WT/VOL	SK DOT NUMBER
A.	WASTE COMBUSTIBLE LIQUID, N.O.S. (PETROLEUM NAPHTHA) NA1993 PGIII (D039,D008,D018,D040)(ERG#27)6.7#/GAL	1	DP	14	G	975
B.						
C.						
D.						

5 16 30 55

I CERTIFY THAT MY TOTAL WASTE STREAMS ARE WITHIN ONE OF THE FOLLOWING CATEGORIES.

0 TO 220 LBS./MONTH — INITIALS

220 LBS. TO 2,200 LBS./MONTH — INITIALS

GREATER THAN 2,200 LBS./MONTH — INITIALS

DESIGNATED FACILITY NAME AND ADDRESS
8755 NORTHWEST 95TH ST SAFETY-KLEEN CORP. MEDLEY, FL 33178

USA EPA ID NO. FLD984171694

STATE ID NO.

REC SECTION

CASH ☐ CHECK NUMBER

TOTAL RECEIVED

APPLY PAYMENT TO:
☐ TODAY'S SERVICE/SALE
☐ PREVIOUS BALANCE AS FOLLOWS

INVOICE # AMOUNT $ INVOICE # AMOUNT $

05011600 00068 0797

CARD NO. AMEX VISA MC EXP. DATE

LDR MESSAGE
LDR NOT REQ'D

MANIFEST CODE	SEQ #
DP	412

IN THE EVENT OF AN EMERGENCY CALL
1-800-468-1760 (24 hours)

I AGREE TO PAY THE ABOVE CHARGES AND TO BE BOUND BY THE TERMS AND CONDITIONS SET FORTH ABOVE AND ON THE REVERSE SIDE OF THIS DOCUMENT. PLEASE CHARGE MY ACCOUNT FOR THIS TRANSACTION UNLESS OTHERWISE INDICATED IN THE PAYMENT RECEIVED SECTION. THE INDIVIDUAL SIGNING THIS DOCUMENT IS DULY AUTHORIZED TO SIGN AND BIND CUSTOMER TO ITS TERMS.

R.C. PINEIRO
Print Customer Name

By: Customer's Authorized Representative

TOTAL CHARGE (FROM ABOVE)	
WM DISCOUNT (FROM ABOVE)	
TOTAL DUE	0

SERVICE AND SALES ACKNOWLEDGEMENT

THIS AGREEMENT CONTINUES ON THE REVERSE SIDE

Road
123-7857

FOR SERVICE CALL
TRANSPORTER
305 884-0123 TIM SHOLL
LDR NOT REQ'D 0-220

DUNS NO. 05106-0408 FED. ID NO. 39-6090019

SCHEDULED SERVICE WEEK	SCHEDULED SERVICE TERRITORY	REFERENCE NUMBER
95-48	17	697196
MANIFEST NUMBER	XXXXX	

97-02-2828-3
KER- MIAMI TERMINAL TRA
1200 N.W. 137TH AVENUE
MIAMI FL 33182

GENERATOR

BILL TO

SERVICE DATE	SALESMEN'S NO.	SALES TAX EXEMPTION NUMBER	HANDLING CODE	CREDIT CODE	SALES TAX CODE	PREVIOUS BALANCE	PORTION OVER 60 DAYS
01-28-95	7118			C	10-065-5159	79.22-	

BUSINESS TYPE	CHAIN	CUSTOMER P.O. NUMBER	GENERATOR'S/CUSTOMER PHONE #	O.C.	SVC P/S	PROD. P/S	SERVICE TAX	C.O.M.S. TAX	PRODUCT TAX
09	NO		305-223-9200	NO	481	007	.065	.065	.065

	SERVICE NO.	SERIAL NO.	SERVICE CHARGE	SALES TAX	TOTAL CHARGE	SOLVENT CLEAN	SOLVENT SPENT	SERVICE TERM	CHANGE SERVICE TERM (WEEKS)	(INITIAL)	CHANGE SCHEDULED DATE (YY WW)	INV. CODE	REMARKS
1	~~[illegible]~~		~~75.75~~	~~4.92~~	~~80.67~~			~~3~~					301
2													DCG
3													
4	330-80143		205.75	13.37	219.12			16			96-12		PCG
5													
6													
7													
8													
9													
0													
1													
2													
	TOTAL SERVICE SECTION		205.75	13.37	219.12								

MACHINE INSPECTION SECTION (PLEASE CHECK APPROPRIATE BOXES ON RIGHT) →

	GOOD	POOR		YES	NO		YES	NO
MACHINE CONDITION & CLEANLINESS	☐	☐	DECALS IN PLACE AND LEGIBLE	☐	☐	MACHINE PROPERLY GROUNDED	☐	☐
			FUSIBLE LINK INSTALLED	☐	☐	LOCAL PHONE NO. STICKER AFFIXED TO MACHINE	☐	☐
LAMP ASSEMBLY CONDITION	☐	☐	EMERGENCY CLOSING OF LID UNOBSTRUCTED	☐	☐	SPENT SOLVENT MEETS ACCEPTANCE CRITERIA	☐	☐

WASTE INFORMATION SECTION — USEPA TRANSPORTER ID NO. ILD984908202 — GENERATOR USEPA ID NO. FLD981758485 — GENERATOR STATE ID NO.

11. US DOT DESCRIPTION (INCLUDING PROPER SHIPPING NAME, HAZARD CLASS, AND ID.)	12. CONTAINERS NO.	TYPE	13. TOTAL QUANTITY	14. UNIT WT/VOL	SK DOT NUMBER	
RQ WASTE COMBUSTIBLE LIQUID,N.O.S. (PETROLEUM NAPHTHA) NA1993 PGIII(D001) (D006,D008,D018,D035,D039,D040)(ERG#27)	1	DM	12	G	585	5153 55

I CERTIFY THAT MY TOTAL WASTE STREAMS ARE WITHIN ONE OF THE FOLLOWING CATEGORIES.
0 TO 220 LBS./MONTH — INITIALS
220 LBS. TO 2,200 LBS./MONTH — INITIALS
GREATER THAN 2,200 LBS./MONTH — INITIALS

DESIGNATED FACILITY NAME AND ADDRESS
8755 NORTHWEST 95TH ST SAFETY-KLEEN CORP. MEDLEY, FL 33178
USA EPA ID NO. FLD984171694
STATE ID NO.

PRODUCT NUMBER	SK SURVEY NO.	DESCRIPTION	MSDS GIVEN	PRICE	U/M	QUANTITY DELIVERED	SALES AMOUNT	TAX	LINE TOTAL
			☐						
			☐						
			☐						
			☐						
			☐						
			☐						

PAYMENT RECEIVED SECTION
CASH ☐ TOTAL RECEIVED
CHECK NUMBER
APPLY PAYMENT TO:
☐ TODAY'S SERVICE/SALE
☐ PREVIOUS BALANCE AS FOLLOWS
INVOICE # AMOUNT $ INVOICE # AMOUNT $
PREVIOUS CREDIT CARD NO → 5405 0160 0000 0088 0797

TOTAL PRODUCTS AMOUNT

CHARGE MY ACCOUNT FOR THIS TRANSACTION UNLESS OTHERWISE INDICATED IN THE PAYMENT RECEIVED SECTION. THE RECLAMATION AGREEMENT, ADDITIONAL TERMS AND CONDITIONS, AND OTHER INFORMATION APPEARING ON THE REVERSE SIDE ARE MADE A PART HEREOF.

TOTAL SERVICE AMOUNT (FROM ABOVE)
TOTAL DUE 219.12

"This is to certify that the above-named materials are properly classified, described, packaged, marked and labeled, and are in proper condition for transportation according to the applicable regulations of the Department of Transportation."

CREDIT CARD NO. STANLE
AMEX VISA MC EXP. DATE

CONSUMER REFERENCE INFORMATION

Print Name Ramiro Pantoja X

CUSTOMER

SERVICE AND SALES ACKNOWLEDGEMENT

FORM NO. 700-08-12 (REV. 7/95)

123-7857

WE CARE

TRANSPORTER
305 884-0123 TIM SHOLL
-02-2828-3 LDR NOT REQ'D 0-220 DP

4A- MIAMI TERMINAL TRA
0 N.W. 137TH AVENUE
IAMI FL 33182

BILL TO

SCHEDULED SERVICE WEEK	SCHEDULED SERVICE TERRITORY	REFERENCE NUMBER
95-40	17	220962
MANIFEST NUMBER	XXXXX	

SERVICE DATE	SALESMEN'S NO.	SALES TAX EXEMPTION NUMBER	HANDLING CODE	CREDIT CODE	SALES TAX CODE	PREVIOUS BALANCE	PORTION OVER 60 DAYS
10-4-95	7118			C	10-065-5159	6.18	4.90

BUSINESS TYPE	CHAIN	CUSTOMER P.O. NUMBER	GENERATOR'S/CUSTOMER PHONE #	O.C.	SVC P/S	PROD. P/S	SERVICE TAX	C.O.M.S. TAX	PRODUCT TAX
09	NO		305-223-9200	NO	481	001	.065	.065	.065

	SERVICE NO.	SERIAL NO.	SERVICE CHARGE	SALES TAX	TOTAL CHARGE	SOLVENT CLEAN	SOLVENT SPENT	SERVICE TERM	CHANGE SERVICE TERM (WEEKS)	CHANGE SERVICE TERM (INITIAL)	CHANGE SCHEDULED DATE (YY WW)	INV. CODE	REMARKS
1	307-09703		75.75	4.92	80.67	XX	XX	8					307
2													
3													
4													
5													
6													
7													
8													
9													
10													
11													
12													
TOTAL SERVICE SECTION			75.75	4.92	80.67								

CUSTOMER

MACHINE INSPECTION SECTION (PLEASE CHECK APPROPRIATE BOXES ON RIGHT) →

	GOOD	POOR		YES	NO		YES	NO
MACHINE CONDITION & CLEANLINESS	☐	☐	DECALS IN PLACE AND LEGIBLE	☐	☐	MACHINE PROPERLY GROUNDED	☐	☐
LAMP ASSEMBLY CONDITION	☐	☐	FUSIBLE LINK INSTALLED	☐	☐	LOCAL PHONE NO. STICKER AFFIXED TO MACHINE	☐	☐
			EMERGENCY CLOSING OF LID UNOBSTRUCTED	☐	☐	SPENT SOLVENT MEETS ACCEPTANCE CRITERIA	☐	☐

WASTE INFORMATION SECTION — USEPA TRANSPORTER ID NO. ILD984908212 — GENERATOR USEPA ID NO. FLD981758485 — GENERATOR STATE ID NO.

	11. US DOT DESCRIPTION (INCLUDING PROPER SHIPPING NAME, HAZARD CLASS, AND ID.)	12. CONTAINERS NO.	TYPE	13. TOTAL QUANTITY	14. UNIT WT/VOL	SK DOT NUMBER
A.	RQ WASTE COMBUSTIBLE LIQUID, N.O.S. (PETROLEUM NAPHTHA) NA1993 PGIII(D001) (D006, D008, D018, D035, D039, D040) (ERG#27)	1	DM	15	G	5863
B.						
C.						
D.						

5163065

I CERTIFY THAT MY TOTAL WASTE STREAMS ARE WITHIN ONE OF THE FOLLOWING CATEGORIES.

0 TO 220 LBS./MONTH — INITIALS

220 LBS. TO 2,200 LBS./MONTH — INITIALS

GREATER THAN 2,200 LBS./MONTH — INITIALS

DESIGNATED FACILITY NAME AND ADDRESS: SAFETY-KLEEN CORP. 3755 NORTHWEST 95TH ST MEDLEY, FL 33178

USA EPA ID NO. FLD984171694

STATE ID NO.

PRODUCT NUMBER	SK SURVEY NO.	DESCRIPTION	MSDS GIVEN	PRICE	U/M	QUANTITY DELIVERED	SALES AMOUNT	TAX	LINE TOTAL
			☐						
			☐						
			☐						
			☐						
			☐						
			☐						

PAYMENT RECEIVED SECTION

CASH ☐ — TOTAL RECEIVED — APPLY PAYMENT TO:

CHECK NUMBER

☐ TODAY'S SERVICE/SALE

☐ PREVIOUS BALANCE AS FOLLOWS

INVOICE #	AMOUNT $	INVOICE #	AMOUNT $

PREVIOUS CREDIT CARD NO → 5405011600000068 0797

CREDIT CARD NO. — AMEX VISA MC — EXP. DATE

CONSUMER REFERENCE INFORMATION

TOTAL PRODUCTS AMOUNT

CHARGE MY ACCOUNT FOR THIS TRANSACTION UNLESS OTHERWISE INDICATED IN THE PAYMENT RECEIVED SECTION. THE RECLAMATION AGREEMENT, ADDITIONAL TERMS AND CONDITIONS, AND OTHER INFORMATION APPEARING ON THE REVERSE SIDE ARE MADE A PART HEREOF.

TOTAL SERVICE AMOUNT (FROM ABOVE)

TOTAL DUE

This is to certify that the above-named materials are properly classified, described, packaged, marked and labeled, and are in proper condition for transportation according to the applicable regulations of the Department of Transportation.

Print Name RAMIRO C PIÑEIRO X

GENERATOR/DESIGNATED REPRESENTATIVE SIGNATURE

SERVICE AND SALES ACKNOWLEDGEMENT

FORM NO. 700-08-12 (REV. 7/95)

IN THE EVENT OF AN EMERGENCY CALL 1-708-888-4660 (24 hours)

SEE REVERSE SIDE FOR IMPORTANT INFORMATION

DUNS NO. 05-708-0408 FED. ID NO. 59-6090019

SCHEDULED SERVICE WEEK	SCHEDULED SERVICE TERRITORY	REFERENCE NUMBER
95-24	17	626646

MANIFEST NUMBER: XXXXX

TRANSPORTER

305 884-0123 TIM SHOLL

2828-3 LDR NOT REQ'D 0-220 DP

MIAMI TERMINAL TRA

W. 137TH AVENUE

FL 33182

3-163-01-0226

RINKER MATERIALS CORP.

ACCTS. PAYABLE-ANNETTE

P.O. BOX 24635 82.72

WEST PALM BEACH, FL 33416

BILL TO

SERVICE DATE	SALESMEN'S NO.	SALES TAX EXEMPTION NUMBER	HANDLING CODE	CREDIT CODE	SALES TAX CODE	PREVIOUS BALANCE	PORTION OVER 60 DAYS
6-13-95	7118			D	10-065-5159	~~81.50~~	80.30

BUSINESS TYPE	CHAIN	CUSTOMER P.O. NUMBER	GENERATOR'S/CUSTOMER PHONE #	O.C.	SVC P/S	PROD. P/S	SERVICE TAX	C.O.M.S. TAX	PRODUCT TAX
09	NO		305-223-9200	NO	481	001	.065	.065	.065

	SERVICE NO. / SERIAL NO.	SERVICE CHARGE	SALES TAX	TOTAL CHARGE	SOLVENT CLEAN	SOLVENT SPENT	SERVICE TERM	CHANGE SERVICE TERM (WEEKS) (INITIAL)	CHANGE SCHEDULED DATE (YY WW)	INV. CODE	REMARKS 315
1	307-09703	75.75	4.92	80.67	XX	XX	8				
2											
3											
4											
5											
6											
7											
8											
9											
10											
11											
12											

PAST DUE
PLEASE REMIT
8755 N.W. 95th ST.
MEDLEY, FL 33178

TOTAL SERVICE SECTION	75.75	4.92	80.67

MACHINE INSPECTION SECTION (PLEASE CHECK APPROPRIATE BOXES ON RIGHT) →

	GOOD	POOR
MACHINE CONDITION & CLEANLINESS	☐	☐
LAMP ASSEMBLY CONDITION	☐	☐

	YES	NO
DECALS IN PLACE AND LEGIBLE	☐	☐
FUSIBLE LINK INSTALLED	☐	☐
EMERGENCY CLOSING OF LID UNOBSTRUCTED	☐	☐
MACHINE PROPERLY GROUNDED	☐	☐
LOCAL PHONE NO. STICKER AFFIXED TO MACHINE	☐	☐
SPENT SOLVENT MEETS ACCEPTANCE CRITERIA	☐	☐

WASTE INFORMATION SECTION — USEPA TRANSPORTER ID NO. ILD984908202 — GENERATOR USEPA ID NO. FLD981758485 — GENERATOR STATE ID NO.

	11. US DOT DESCRIPTION (INCLUDING PROPER SHIPPING NAME, HAZARD CLASS, AND ID.)	12. CONTAINERS NO.	TYPE	13. TOTAL QUANTITY	14. UNIT WT/VOL	SK DOT NUMBER	CONTAINER SIZE
A.	RQ WASTE COMBUSTIBLE LIQUID,N.O.S. (PETROLEUM NAPHTHA) NA1993 PGIII(D001) (D006,D008,D018,D035,D039,D040)(ERG#27)	0	DM	0	G	585	516305 5
B.							
C.							
D.							

I CERTIFY THAT MY TOTAL WASTE STREAMS ARE WITHIN ONE OF THE FOLLOWING CATEGORIES.

0 TO 220 LBS./MONTH — INITIALS

220 LBS. TO 2,200 LBS./MONTH — INITIALS

GREATER THAN 2,200 LBS./MONTH — INITIALS

DESIGNATED FACILITY NAME AND ADDRESS: SAFETY-KLEEN CORP. 8755 NORTHWEST 95TH ST MEDLEY, FL 33178

USA EPA ID NO. FLD984171694

STATE ID NO.

PRODUCT NUMBER	SK SURVEY NO.	DESCRIPTION	MSDS GIVEN	PRICE	U/M	QUANTITY DELIVERED	SALES AMOUNT	TAX	LINE TOTAL
			☐						
			☐						
			☐						
			☐						
			☐						
			☐						

PAYMENT RECEIVED SECTION

CASH ☐ CHECK NUMBER

TOTAL RECEIVED 80.67

APPLY PAYMENT TO: ☑ TODAY'S SERVICE/SALE ☐ PREVIOUS BALANCE AS FOLLOWS

INV. # _____ AMOUNT $ _____

PREVIOUS CREDIT CARD NO. 5405021600000068 0795

CREDIT CARD NO. 5405911000000006 EXP. DATE 0795 AMEX VISA MC

CONSUMER REFERENCE INFO (NUMERIC ONLY)

TOTAL PRODUCTS AMOUNT

CHARGE MY ACCOUNT FOR THIS TRANSACTION UNLESS OTHERWISE INDICATED IN THE PAYMENT RECEIVED SECTION. THE RECLAMATION AGREEMENT, ADDITIONAL TERMS AND CONDITIONS, AND OTHER INFORMATION APPEARING ON THE REVERSE SIDE ARE MADE A PART HEREOF.

TOTAL SERVICE AMOUNT (FROM ABOVE)

TOTAL DUE 80.67

"This is to certify that the above-named materials are properly classified, described, packaged, marked and labeled, and are in proper condition for transportation according to the applicable regulations of the Department of Transportation."

Print Name Ramiro C. Pinero X

GENERATOR/DESIGNATED REPRESENTATIVE SIGNATURE

IN THE EVENT OF AN EMERGENCY CALL 1-708-888-4660 (24 hours)

SEE REVERSE SIDE FOR IMPORTANT INFORMATION

SERVICE AND SALES AGREEMENT FOR CUSTOMER

FORM NO. 700-08-12 (REV. 1/95)

WE CARE

FOR SERVICE CALL 305 884-0123

TRANSPORTER TIM SCHOLL

LDR NOT REQ'D 0-220 DP

DUNS NO. 05106-0408 FED. ID NO. 39-6090019

SCHEDULED SERVICE WEEK	SCHEDULED SERVICE TERRITORY	INVOICE NUMBER
95-16	04	145021

MANIFEST NUMBER XXXXX

GENERATOR
-02-2828-3
R- MIAMI TERMINAL TRA
200 N.W. 137TH AVENUE
MIAMI FL 33182

BILL TO
3-163-01-0226
RINKER MATERIALS CORP.
ACCTS. PAYABLE-ANNETTE
P.O. BOX 24635
WEST PALM BEACH FL 33416

SERVICE DATE	SALESMEN'S NO.	SALES TAX EXEMPTION NUMBER	HANDLING CODE	CREDIT CODE	SALES TAX CODE	PREVIOUS BALANCE	PORTION OVER 60 DAYS
4-17-95	7116			D	10-065-5159	80.30	

BUSINESS TYPE	CHAIN	CUSTOMER P.O. NUMBER	GENERATOR'S/CUSTOMER PHONE #	O.C.	SVC P/S	PROD. P/S	SERVICE TAX	C.O.M.S. TAX	PRODUCT TAX
07	NO		305-223-9200	NO	581	001	.065	.065	.065

	SERVICE NO. / SERIAL NO.	SERVICE CHARGE	SALES TAX	TOTAL CHARGE	SOLVENT CLEAN	SOLVENT SPENT	SERVICE TERM	CHANGE SERVICE TERM (WEEKS)	(INITIAL)	CHANGE SCHEDULED DATE (YY WW)	INV. CODE	REMARKS
1	307-09703	~~94.75~~	~~5.14~~	~~100.91~~	XX	XX	8					156
2		75.75	4.92	80.67								
3												
4												
5												
6												
7												
8												
9												
10												
11												
12												
TOTAL SERVICE SECTION		75.75 ~~94.75~~	4.92 ~~5.14~~	80.67 ~~100.91~~								

MACHINE INSPECTION SECTION (PLEASE CHECK APPROPRIATE BOXES ON RIGHT) →

	GOOD	POOR		YES	NO		YES	NO
MACHINE CONDITION & CLEANLINESS	✓		DECALS IN PLACE AND LEGIBLE	✓		MACHINE PROPERLY GROUNDED		
LAMP ASSEMBLY CONDITION	✓		FUSIBLE LINK INSTALLED	✓		LOCAL PHONE NO. STICKER AFFIXED TO MACHINE		
			EMERGENCY CLOSING OF LID UNOBSTRUCTED	✓		SPENT SOLVENT MEETS ACCEPTANCE CRITERIA		

WASTE INFORMATION SECTION — USEPA TRANSPORTER ID NO. ILD984908202 — GENERATOR USEPA ID NO. FLD981758485 — GENERATOR STATE ID NO.

	11. US DOT DESCRIPTION (INCLUDING PROPER SHIPPING NAME, HAZARD CLASS, AND ID.)	12. CONTAINERS NO.	TYPE	13. TOTAL QUANTITY	14. UNIT WT/VOL	SK DOT NUMBER	CONTAINER SIZE
A.	RQ WASTE COMBUSTIBLE LIQUID,N.O.S. (PETROLEUM NAPHTHA) NA1993 PGIII(D001) (D006,D008,D018,D035,D039,D040)(ERG#27)	1	DM	13	G	585	5163055
B.							
C.							
D.							

I CERTIFY THAT MY TOTAL WASTE STREAMS ARE WITHIN ONE OF THE FOLLOWING CATEGORIES.

0 TO 220 LBS./MONTH — INITIALS

220 LBS. TO 2,200 LBS./MONTH — INITIALS

GREATER THAN 2,200 LBS./MONTH — INITIALS

DESIGNATED FACILITY NAME AND ADDRESS SAFETY-KLEEN CORP. 3755 NORTHWEST 95TH ST MEDLEY, FL 33178

USA EPA ID NO. FLD984171694

STATE ID NO.

PRODUCT SALES SECTION

PRODUCT NUMBER	SK SURVEY NO.	DESCRIPTION	MSDS GIVEN	PRICE	U/M	QUANTITY DELIVERED	SALES AMOUNT	TAX	LINE TOTAL
			☐						
			☐						
			☐						
			☐						
			☐						
			☐						

PAYMENT RECEIVED SECTION

CASH ☐ CHECK NUMBER — TOTAL RECEIVED — APPLY PAYMENT TO: ☐ TODAY'S SERVICE/SALE ☐ PREVIOUS BALANCE AS FOLLOWS

INV. # _____ AMOUNT $ _____

PREVIOUS CREDIT CARD NO.

CREDIT CARD NO. 5405 1160 0000 68 — AMEX VISA MC — EXP. DATE 07 95

CONSUMER REFERENCE INFO (NUMERIC ONLY)

TOTAL PRODUCTS AMOUNT

CHARGE MY ACCOUNT FOR THIS TRANSACTION UNLESS OTHERWISE INDICATED IN THE PAYMENT RECEIVED SECTION. THE RECLAMATION AGREEMENT, ADDITIONAL TERMS AND CONDITIONS, AND OTHER INFORMATION APPEARING ON THE REVERSE SIDE ARE MADE A PART HEREOF.

TOTAL SERVICE AMOUNT (FROM ABOVE)

TOTAL DUE 80.67

This is to certify that the above-named materials are properly classified, described, packaged, marked and labeled, and are in proper condition for transportation according to the applicable regulations of the Department of Transportation.

Print Name RAMIRO PINEIRO X _____ GENERATOR/DESIGNATED REPRESENTATIVE SIGNATURE

IN THE EVENT OF AN EMERGENCY CALL 1-708-888-4660 (24 hours)

SEE REVERSE SIDE FOR IMPORTANT INFORMATION

CUSTOMER

SERVICE AND SALES ACKNOWLEDGEMENT

FORM NO. 700-08-12 (REV. 11/95)

TRANSPORTER

305 884-0123 TIM SHOLL

28-3 LDR NOT REQ'D 0-220 DP

I TERMINAL TRA

37TH AVENUE

33182

BILL TO

SCHEDULED SERVICE WEEK	SCHEDULED SERVICE TERRITORY	REFERENCE NUMBER
95-32	17	97647D
MANIFEST NUMBER	XXXXX	

SALESMEN'S NO.	SALES TAX EXEMPTION NUMBER	HANDLING CODE	CREDIT CODE	SALES TAX CODE	PREVIOUS BALANCE	PORTION OVER 60 DAYS
7116			D	10-065-5159	83.94	82.72

CUSTOMER P.O. NUMBER	GENERATORS/CUSTOMER PHONE #	O.C.	SVC P/S	PROD. P/S	SERVICE TAX	C.O.M.S. TAX	PRODUCT TAX
NO	305-223-9200	NO	481	001	.065	.065	.065

VICE NO.	SERIAL NO.	SERVICE CHARGE	SALES TAX	TOTAL CHARGE	SOLVENT CLEAN	SOLVENT SPENT	SERVICE TERM	CHANGE SERVICE TERM (WEEKS)	(INITIAL)	CHANGE SCHEDULED DATE (YY WW)	INV. CODE	REMARKS
307-09763		75.75	4.92	80.67	XX	XX	8					319
												30.35
												INV 123738 2-27-95
												* COLLECT OR PULL *
												* COLLECT OR PULL *
												* COLLECT OR PULL *
												* COLLECT OR PULL *
												* COLLECT OR PULL *
TOTAL SERVICE SECTION		75.75	4.92	80.67								

MACHINE INSPECTION SECTION (PLEASE CHECK APPROPRIATE BOXES ON RIGHT) →

	GOOD	POOR		YES	NO		YES	NO
MACHINE CONDITION & CLEANLINESS	☐	☐	DECALS IN PLACE AND LEGIBLE	☐	☐	MACHINE PROPERLY GROUNDED	☐	☐
LAMP ASSEMBLY CONDITION	☐	☐	FUSIBLE LINK INSTALLED	☐	☐	LOCAL PHONE NO. STICKER APPLIED TO MACHINE	☐	☐
			EMERGENCY CLOSING OF LID UNOBSTRUCTED	☐	☐	SPENT SOLVENT MEETS ACCEPTANCE CRITERIA	☐	☐

WASTE INFORMATION SECTION — USEPA TRANSPORTER ID NO. ILD984908202 — GENERATOR USEPA ID NO. FLD981758485 — GENERATOR STATE ID NO.

11. US DOT DESCRIPTION (INCLUDING PROPER SHIPPING NAME, HAZARD CLASS, AND ID.)	12. CONTAINERS NO.	TYPE	13. TOTAL QUANTITY	14. UNIT WT/VOL	SK DOT NUMBER	CONTAINER SIZE
A. RQ WASTE COMBUSTIBLE LIQUID,N.O.S. (PETROLEUM NAPHTHA) NA1993 PGIII(D001) (D006,D008,D018,D035,D039,D040)(ERG#27)	6	DR	5	G	585	5163G55
B.						
C.						
D.						

I CERTIFY THAT MY TOTAL WASTE STREAMS ARE WITHIN ONE OF THE FOLLOWING CATEGORIES.

0 TO 220 LBS./MONTH — INITIALS

220 LBS. TO 2,200 LBS./MONTH — INITIALS

GREATER THAN 2,200 LBS./MONTH — INITIALS

DESIGNATED FACILITY NAME AND ADDRESS: SAFETY-KLEEN CORP. 8755 NORTHWEST 95TH ST HEDLEY, FL 33178

USA EPA ID NO. FLD984171694

STATE ID NO.

PRODUCT SALES SECTION

PRODUCT NUMBER	SK SURVEY NO.	DESCRIPTION	MSDS GIVEN	PRICE	UM	QUANTITY DELIVERED	SALES AMOUNT	TAX	LINE TOTAL
			☐						
			☐						
			☐						
			☐						
			☐						
			☐						

PAYMENT RECEIVED

CASH ☐ CHECK NUMBER

TOTAL RECEIVED 164.61

APPLY PAYMENT TO: ☑ TODAY'S SERVICE/SALE ☑ PREVIOUS BALANCE AS FOLLOWS

INV. # 123738 AMOUNT $ 83.94

PREVIOUS CREDIT CARD NO. EXPIRED

TOTAL PRODUCTS AMOUNT

CHARGE MY ACCOUNT FOR THIS TRANSACTION UNLESS OTHERWISE INDICATED IN THE PAYMENT RECEIVED SECTION. THE RECLAMATION AGREEMENT, ADDITIONAL TERMS AND CONDITIONS, AND OTHER INFORMATION APPEARING ON THE REVERSE SIDE ARE MADE A PART HEREOF.

TOTAL SERVICE AMOUNT (FROM ABOVE)

TOTAL DUE 80.67

"This is to certify that the above-named materials are properly classified, described, packaged, marked and labeled, and are in proper condition for transportation according to the applicable regulations of the Department of Transportation."

CREDIT CARD NO. 6501160000068 AMEX VISA MC EXP. DATE 0797

CUSTOMER REFERENCE (NUMERIC ONLY)

Print Name X RAMIRO C. PINEIRO

GENERATOR/DESIGNATED REPRESENTATIVE SIGNATURE

IN THE EVENT OF AN EMERGENCY CALL 1-708-886-4660 (24 hours)

SEE REVERSE SIDE FOR IMPORTANT INFORMATION

SERVICE AND SALES ACKNOWLEDGEMENT

FORM NO. 700-08-12 (REV. 1/95)

COMMERCIAL TESTING & ENGINEERING CO.
GENERAL OFFICES: 1919 SOUTH HIGHLAND AVE., SUITE 210-B, LOMBARD, ILLINOIS 60148 • TEL: 630-953-9300 FAX: 630-953-9306
SINCE 1908®
Member of the SGS Group (Société Générale de Surveillance)

PLEASE ADDRESS ALL CORRESPONDENCE TO:
216 OXMOOR CIRCLE
BIRMINGHAM, AL 35209
TEL: (205) 942-3120
FAX: (205) 942-0914

March 25, 1999

[redacted]

Sample identification by [redacted]

Kind of sample reported to us: Bottom Ash - Dragchain
Date: 2/26/99 Time: 1200

Sample taken at ------

Sample taken by [redacted]

Date sampled ------

Date received March 9, 1999

Analysis report no. 73-84426

TCLP Extract Elements

Arsenic, As	0.11
Barium, Ba	0.736
Cadmium, Cd	<0.005
Chromium, Cr	0.064
Lead, Pb	<0.05
Mercury, Hg	0.0003
Selenium, Se	0.06
Silver, Ag	<0.005

Procedure: TCLP per EPA Reference SW-846, Method 1311.

Results: TCLP results are reported in milligrams per liter, (mg/L), on an extract basis.

Respectfully submitted,
COMMERCIAL TESTING & ENGINEERING CO.

S E Clerkin
Birmingham Laboratory

MEMBER ACIL

Updated 10-26-99

CONTACT OFFICIALS

1. The On-Scene Process Foreman: one of the following
   Timothy Duffy
   Vernon Clark
   Jim Sujansky
   Joe Kronich
   Dave Durkin

   229-2920 or 229-3981

2. **Michael C. Gordon, Operations Manager (home phone 954-341-7731)***

3. James S. Jenkins III, Vice-President Cement Operations (home phone 954-472-0049)

4. Michael D. Vardeman, Environmental Manager (home phone 954-972-1634)

5. Don Emery, RES Manager (home phone 561-586-9287)

6. Joel Eite, Production Manager (cellular phone 305-773-0121)

*** Primary ERC**

Emergency Response Contractor

Primary -- Cliff Berry, Inc., Pt. Everglades 954-763-3390

Secondary -- Permafix, Ft. Lauderdale 954-583-3795

On site alarm, telephone, and radio systems will be used to alert plant personnel of fire, explosion, or spill. Additionally, the telephone system will be used to notify 911 which will alert fire, police as needed. Finally, the telephone system or portable phones will be used as necessary to notify agency personnel of the situation.

FCSI

FLORIDA CHEMICAL SUPPLY, INC.

6810 East Chelsea St. • Tampa, FL 33610

May 11, 1999

Mr. Don Turner
CSR Ringer Materials
1501 Belvedere Road
West Palm Beach, Florida 33406

Dear Mr. Turner:

Enclosed please find the materials pertaining to our product FCSI Eliminator. Also enclosed is the biodegradability study, which was done on the Glycolic Acid 70%. Glycolic acid is a product derived from sugar cane extraction.

FCSI Eliminator has a 3.5 pH in the concentrated product. At a dilution rate of 2-1 the pH is approximately 3.5 to 4.0. We will perform a water test to get an actual pH reading of the run-off water, which goes into the pond.

If you have any questions, please contact me.

Sincerely,

Marilyn Exum

MARILYN EXUM
President

ME/mjm
Encl.

Telephone: 813-988-4890 • Fax: 813-622-7167 • WATS: 800-940-2436

ARAMARK
Uniform Services

INVOICE

INQUIRIES (305)681-352

CUSTOMER 5903029
INVOICE 561-3622666
DATE 10/19/99
PAGE 1 of 1

Deliver To ➤ CSR-RINKER TRANSPORT
1200 N.W. 137 AVE.
MIAMI FL 33165
(305)221-7645

ROUTE	STOP	TERMS	GARMENT ID
33	10	2	6
A/R INV	**SERVICE DAY**		**PREVIOUS BALANCE**
7	...T...		6057

0 - 30 DAYS	31 - 60 DAYS	OVER 60 DAYS
6057	00	0

SERVICE	WEARER # L/R	ITEM DESCRIPTION / NAME	INVENTORY	DELIVERY QUANTITY	BILL QUANTITY	RATE	TOTAL CHARGE	ADDT'L AMOUNT	CREDIT AMOUNT
		Preferred Customer							
		PO # 009507 12/31/96							
LEAVE	A COPY	OF GRMT CK SHEET W/CUST							
CARDHOLDER		NAME LEE MAGUIRE							
M	# 5405	-0116-0000-0084 07/99							
WKLY	68	SVJANSKY JIM PANT 002	11		1	2865	286		
		SHRT 580	11		1	4815	481		
WKLY	85	WELLS MARK SHRT 580	11		1	4815	481		
WKLY		CABINET TWL FB XXXX	1		1*	00	00		
WKLY		MAT SLAT 3X4	8	4	4	230	920		
WKLY		MAT BLAK 3X10	2	1	1	468	468		
WKLY		MAT BLAK 3X4	4	2	2	230	460		
WKLY		MAT SLAT 3X10	2	1	1	468	468		
WKLY		SOAP TOP GRIT GAL	1	1	1	1248	1248		
WKLY		CONTINUOUS TWL WHIT LONG	6	3	3	186	558		
WKLY		SHOP/TWL COTTON REDD 18X18	100	98	98	052	510		
		INVENTORY MAINTENANCE			5	122	61		
		FL/COUNTY tax on 58.80 at 6.500%					382		

FOR OFFICE USE ONLY

THANK YOU
FOR LETTING US
SERVE YOU

BLINV02F (5/99)

APPROVED BY Sharon Croft

AMOUNT DUE ➤ 63.23

◄ **TOTAL ADJUSTMENT**

◄ **ADJUSTED AMOUNT DUE**

Visit us at: www.ARAMARK-Uniform.com

*Minimum bill quantity

CUSTOMER INVOICE

Payable To ➤ ARAMARK UNIFORM SERVICES, INC
160 ALI BABA AVE.
OPA LOCKA FL 33054

CUSTOMER NAME CSR-RINKER TRANSPORT
CUSTOMER / MASTER 5903029 / 5903000
INVOICE 10/19/99 561-3622666

AMOUNT ENCLOSED $_____

TERMS: NET 10 DAYS

FOR OFFICE USE ONLY	
CHECK NUMBER	NET AMOUNT
Ma 11	1 2 17

Department of Environmental Protection

Central District
3319 Maguire Boulevard, Suite 232
Orlando, Florida 32803-3767

Fax Cover Sheet

DATE: 10-21-99

Number of pages including cover sheet: 3

TO: JEFF SMITH

PHONE: FAX:

FROM: JOHN WHITE

PHONE: 407-893-3323 SC 325-3323 FAX: 407-893-3167 SC 342-3167

Message

Jeff

Attached is a copy of Rinker's Soil Thermal Treatment facility requirements they sent to one of the Central District's facilities.

If you notice on the bottom of the page, they are not requiring TCLP unless you exceed on of the metals limits that were in 62-775 (now 62-713).

If you read 62-775, they should be asking for TCLP and Totals.

All of this comes from one of our facilities that was told Rinker could take their separator sludge, even though it had TCLP Selenium at 1.2 ppm. If you looked at the total metal value for this waste it would be well below the 389 ppm where they would even begin to ask for TCLP.

The facility (Rinker) needs something....

I know you don't have time (or people) to look at them so you may want to send them a quick letter informing them RCRA still exists in Florida regardless of what the petroleum program would have them believe.

jw

ACCEPTANCE CRITERIA
TABLE II

BY VOLUME (CUBIC YARDS)	BY WEIGHT (TONS)	NUMBER OF COMPOSITES REQUIRED
Less than 100	Less than 140	1
100 - 500	140 - 700	3
500 -1000	700 - 1400	5
For each add'l 500	For each add'l 700	1

THE FOLLOWING LIMITS WILL APPLY BASED UPON STATE AND COUNTY REQUIREMENTS:

8010	1 ppm	
8020	1000 ppm	
TRPH	No Limit	
Total Organic Halides	1000 ppm	
Total Metals	Arsenic	10 ppm
	Barium	4940 ppm ✓
	Cadmium	37 ppm ✓
	Chromium	50 ppm
	Lead	108 ppm
	Mercury	23 ppm
	Selenium	389 ppm ← Totals ✓
	Silver	353 ppm ✓

IF ANY METAL EXCEEDS THE TOTAL AS PRESENTED ABOVE, TCLP MUST BE RAN TO CONFIRM NON-HAZARDOUS NATURE AND QUALIFY FOR POTENTIAL BLENDING.

NOTE: ANY SOIL WITH VOH, VOA OR TOTAL HALOGENS EXCEEDING 1000 PPM MUST BE SUBMITTED FOR DERM APPROVAL PRIOR TO ACCEPTANCE

✓ ← indicates that TCLP should be run well before reaching these limits.

1. Volatile organic aromatics;
2. Total recoverable petroleum hydrocarbons;
3. Polynuclear aromatic hydrocarbons; and
4. Total analyses for arsenic, cadmium, chromium, and lead.

(c) For non-petroleum contaminated soil, the same test parameters as are required in paragraph (b) of subsection (5) shall be included and all analyses shall be documented with the laboratory reports.

(d) Leachability impacts. In addition to the testing requirements above, post-treatment testing shall include an analysis of the potential leachability impacts from the treated soil and all analyses shall be documented with the laboratory reports. When evaluating leachability impacts from a treated soil, the concentrations of contaminants detected in the post-treatment analyses of the treated soil shall be compared to the corresponding soil cleanup target levels for leachability based on ground water and surface water criteria identified in Table II of Chapter 62-777, F.A.C. As an alternative, leachability of treated soil can also be evaluated using the Synthetic Precipitation Leaching Procedure (SPLP), EPA Method 1312, or the Toxicity Characteristic Leaching Procedure (TCLP), EPA Method 1311 for soil which was contaminated with used oil or similar petroleum products, and extracts generated by using these procedures shall be analyzed for the contaminants detected in the post-treatment analysis of the treated soil. Results of the analyses of the extracts shall be compared to the ground water and surface water criteria columns in Table I of Chapter 62-777, F.A.C.

(7) Polychlorinated biphenyls. Soil contaminated with used oil, used hydraulic oil, or used mineral oil may contain polychlorinated biphenyls (PCBs). Applicants should be aware that such contaminated soil may be regulated by the U.S. Environmental Protection Agency under 40 CFR Part 761. Such soil containing PCBs shall not be treated pursuant to this chapter at a soil treatment facility unless the following conditions are met:

(a) Soil contaminated with used oil, used hydraulic oil, or used mineral oil shall be analyzed for PCB concentrations. Soil PCB concentrations must be less than 50 ppm. Such soil shall not be blended, mixed or diluted to meet this specification.

(b) If the analytical results obtained pursuant to paragraph (a) above are equal to or greater than 2 ppm, a sample of the used oil, used hydraulic oil, or used mineral oil source must be shown to have a PCB concentration of less than 50 ppm. If a sample of the used oil, used hydraulic oil, or used mineral oil is not available, a previous record of laboratory data and analytical results may be utilized to show the PCB concentration in the used oil, used hydraulic oil, or used mineral oil. If, after a reasonable effort, a previous record of laboratory data and analytical results can not be located, and the basis for not being able to obtain this information is documented in writing and maintained with the facility's operational records, then the soil may be treated in accordance with paragraph (a) above.

(8) Additional metals leachability testing. If the total concentration of a metal in a soil sample, which has been analyzed according to the requirements of Rule 62-

713.510, F.A.C., exceeds its corresponding total metal concentration in Table B, then a TCLP test shall be required for the metal in that soil.
Specific Authority: 403.061, 403.704, F.S.
Law Implemented: 403.707, F.S.
History: New 8-5-99.

62-713.520 Evaluation and Use of Treated Soil.

(1) The permit application for a stationary soil treatment facility shall include a description of how the treated soils will be properly used or managed so they will not pose a significant threat to public health or the environment.

(2) Cleaned soil can be land applied or used without further restrictions, except that the cleaned soil shall not be deposited in surface waters or wetlands unless it can be demonstrated that the cleaned soil is not expected to cause surface water violations or to be toxic to aquatic life and does not contain other chemicals or materials which could cause nuisance odors if saturated. Cleaned soil is treated soil which meets all of the following criteria:

(a) The concentrations of all contaminants detected in the treated soil are at or below the corresponding concentrations for Residential Direct Exposure soil cleanup target levels contained in Table II of Chapter 62-777, F.A.C., or as provided in paragraph (2)(c) below;

(b) The concentrations of all contaminants detected in the treated soil are at or below the corresponding soil cleanup target levels for leachability identified in Table II of Chapter 62-777, F.A.C. The applicant may use leachability determinations based on SPLP test results, or on TCLP test results for soil which was contaminated with used oil or similar petroleum products, in lieu of some or all of the values in Table II, to demonstrate that the Department's ground water and surface water standards or criteria will not be violated; and

(c) For contaminants detected in the treated soil but not listed in Table II of Chapter 62-777, F.A.C., the soil cleanup target levels for those contaminants shall be decided on a case-by-case basis and shall be calculated using the following:

1. An excess lifetime cancer risk level less than or equal to 1.0×10^{-6};
2. A hazard index (sum of the hazard quotients) less than or equal to 1.0;
3. The equations provided in Figures 4, 5, 6, 7, and 8 of Chapter 62-777, F.A.C., as applicable; and
4. The best achievable detection limits for the chemicals of concern in the soil.

(3) When providing the demonstrations or calculations required in subsection (2) above, the applicant may use information contained in "Technical Report: Development of Soil Cleanup Target Levels (SCTLs) for Chapter 62-777, F.A.C., Final Report" dated May 26, 1999.

(4) Treated soil which does not meet the criteria for cleaned soil shall be managed in one of the following manners:

Table A. Minimum Number of Soil Samples Required

Amount of Soil by Volume, yd^3	Amount of Soil by Weight, tons	Number of Discrete Samples Required for Volatile Organics	Number of Composite Samples Required for non-Volatile Organics
<100	<140	1	1
100 to <500	140 to <700	3	3
500 to <1000	700 to <1400	5	5
For each additional 500 yd^3	For each additional 700 tons	1	1

Table B. Total Metals Analysis and TCLP Test Requirements

If	Exceeds	TCLP Test Criteria
Total Arsenic	100 mg/kg	5.0 mg/L
Total Barium	2000 mg/kg	100.0 mg/L
Total Cadmium	20 mg/kg	1.0 mg/L
Total Chromium	100 mg/kg	5.0 mg/L
Total Lead	100 mg/kg	5.0 mg/L
Total Mercury	4 mg/kg	0.2 mg/L
Total Selenium	20 mg/kg	1.0 mg/L
Total Silver	100 mg/kg	5.0 mg/L

Department of Environmental Protection

Jeb Bush
Governor

Southeast District
P.O. Box 15425
West Palm Beach, Florida 33416

David B. Struhs
Secretary

HAZARDOUS WASTE INSPECTION EXIT INTERVIEW

FACILITY: Rinker Materials DATE: 9/29/99 TIME: 2 30 pm

INTERVIEW PARTICIPANTS: Jeffrey Smith, Jim Ayers, Don Emery.

This exit interview is the Department's attempt to advise you early in the process of possible violations of Florida Administrative Code Chapter 17-730, which adopts 40 CFR Parts 260-266 by reference. It is possible that the list of violations noted (checked) is incomplete. After a complete internal file review by the Department an inspection report will be finalized. In most cases, the violations noted by the inspector will not change in the final report, therefore, you are advised to immediately begin correcting these deficiencies noted below.

Please also be aware that the Department has signed an enforcement agreement with the U.S. Environmental Protection Agency which calls for the assessment and collection of monetary penalties when violations, such as these, are noted. While your quick response in correcting the violations may not reduce the calculated penalties, continued non-compliance may result in greater penalty liability.

The following violations have been tentatively identified:

✓ 1. Hazardous Waste Determination [262.11]. Truckwash sediments
___ 2. Notification as a generator [262.12].
___ 3. Manifest Deficiencies [262 Subpart B].
✓ 4. Recordkeeping [test results, manifest, biennial report].
___ 5. Personnel Training [265.16; 262.34(d)].
✓ 6. Contingency Plan [265 Subpart D; 262.34(d)(5)]. needs update
✓ 7. Preparedness and prevention [265 Subpart C; 262.34(d)(4)]. Truckwash
✓ 8. Container Requirements [265 Subpart I; 262.34(d)(2)]. Label UO container + satellite containers in lab.
___ 9. Tank requirements [265 Subpart J].
___ 10. Exceeding accumulation storage time [262.34(a); 262.34(d)].
___ 11. Accumulation start date & labels on containers [262.34(a)(2)&(3)].
___ 12. Accumulating >1000 kg without meeting SQG standards [261.5].
___ 13. Not ensuring delivery of HW to a proper TSD facility [261.5].
___ 14. Notification as a TSD facility [264.11].
___ 15. Treatment, storage or disposal without a permit [F.A.C. 17-730].
___ 16. Ground water monitoring [265 Subpart F].
___ 17. Security Requirements [265.14].
___ 18. Storing HW less than 50 feet from the property line [265.176].
___ 19. "No Smoking" signs, ignitable/reactive requirements [265.17].
___ 20. Closure/Post-closure [265 Subpart G].
___ 21. Financial Responsibility [264 Subpart H].
___ 22. Failure to comply with the provisions of a Department Issued Permit or with the provisions of the Consent Order.
___ 23. Other ___

COMMENTS: Please provide the following w/i 10 days: #1) All Safety Kleen manifests for past 3 years, #2) Procedures & TCLP data on incoming ash, #3) update

OVER →

Don Emery 9/29/99
RECEIPT ACKNOWLEDGED BY

INVESTIGATOR

Printed on recycled paper.

contingency plan. #4) Profile on truckwash residue, #5) Advised of contractor generated waste, #6) Rinker needs to immediately modify truckwash operation not to release acidic wastes. Release may subject Rinker to 40 CFR 264.111 closure requirements. #7) Receipts for rag laundry service. #8) Rinker needs to revisit using total metals data w/o running TCLP for those soils that have the potential to fail TCLP. #9) Need to label satellite containers in lab.

Material Safety Data Sheet

Required under U.S.D.L. Safety and Health Regulations for Shipyard Employment (29 CFR 1915)

U.S. Department of Labor
Occupational Safety and Health Administration

OMB No. 1218-0074
Expiration Date: 05/31/88

Section I 24 hour toll free emergency phone #1 800 282-3171 Tampa Bay Regional Po:

Manufacturer's Name: Sani Kleen Chemicals, Inc.

Emergency Telephone Number: 305-691 3660

Address (Number, Street, City, State, and ZIP Code): 2990 N. W. 73rd St. Miami, Florida 33147

Chemical Name and Synonyms: Phosphoric Acid/Orthophosphoric Acid

Trade Name and Synonyms: DC 11 (DC 2)

Chemical Family: Inorganic Acid

Formula:

Section II - Hazardous Ingredients

Paints, Preservatives, and Solvents	%	TLV (Units)	Alloys and Metallic Coatings	%	TLV (Units)
Pigments		N/A	Base Metal		N/A
Catalyst		N/A	Alloys		N/A
Vehicle		N/A	Metallic Coatings		N/A
Solvents		N/A	Filler Metal Plus Coating or Core Flux		N/A
Additives		N/A	Others		N/A
Others		N/A			

Hazardous Mixtures of Other Liquids, Solids or Gases

	%	TLV (Units)
Phosphoric Acid		

RECEIVED
SEP 29 1999
DEPT. OF ENV. PROTECTION

Section III - Physical Data

Boiling Point (°F)	) 212°	Specific Gravity (H_2O=1)	) 1
Vapor Pressure (mm Hg.)	N/A	Percent Volatile by Volume (%)	N/A
Vapor Density (AIR=1)	) 1	Evaporation Rate WATER =1)	(1

Solubility in Water: very soluble

Appearance and Odor: green liquid with acidic odor

Section IV - Fire and Explosion Hazard Data

Flash Point (Method Used)	Flammable Limits	Lel	Uel
not combustible	N/A		

Extinguishing Media: any media suitable for extinguishing surrounding fire

Special Fire Fighting Procedures: wear self contained breathing apparatus

Unusual Fire and Explosion Hazards: not combustible.--under conditions of fire, toxic vapors may form

Form OSHA-20 (Rev. 3/84)

Section V - Health Hazard Data

Threshold Limit Value

not not established

Effects of Overexposure

concentrated solutions are irritating to skin, mucous membranes, eyes and upper respiratory tract; direct contact causes burns; oral ingestion may cause nausea diarrhea and shock

Emergency First Aid Procedures

flush skin and eyes with copious amounts of water for at least 15 minutes; for mist inhalation, remove patient to clean air; if ingested, dilute with larg quantities of water and milk. GET MEDICAL ATTENTION.

Section VI - Reactivity Data

Stability	Unstable		Conditions to Avoid high temperatures
	Stable	X	

corrosive

Incompatibility (Materials to Avoid)

strong caustics

Hazardous Decomposition Products

toxic fumes of oxides of phosphorous

Hazardous Polymerization	May Occur		Conditions to Avoid
	Will Not Occur	X	N/A

Section VII - Spill or Leak Procedures

Steps to be Taken in Case Material is Released or Spilled

contain spill - neutralize carefully with limestone or soda ash; avoid caustic soda; then absorb with clay, diatonaceous earth or other suitable materials; after material is removed rinse area with water.

Waste Disposal Method

dispose of neutralized and contaminated material in an approved disposal facility per local and federal regulations

Section VIII - Special Protection Information Use OSHA approved respirator for organic vapors and ac gases.

Respiratory Protection (Specify Type)

always use in well ventilated areas; out of doors recommended

Ventilation	Local Exhaust recommended	Special
	Mechanical (General)	Other

Protective Gloves PVC coated or Neoprene	Eye Protection Full face protector

Other Protective Equipment

eye bath, safety shower, rubber boots, protective water-proof clothing with hea covering

Section IX - Special Precautions

Precautions to be Taken in Handling and Storing

protect containers from physical damage and extreme heat

Other Precautions

Store in stainless steel or plastic drums. Although the information contained herein is offered in good faith, such information is expressly given without ar warranty or any guarantee of its accuracy or sufficiency and is taken at the user's sole risk. User is solely responsible for determining suitability of use in each situation.

CSR

Rinker

RINKER ENVIRONMENTAL SERVICES

ACCEPTANCE CRITERIA

CSR Rinker Materials, 1200 N.W. 137th Avenue, Miami, FL 33182, PO Box 650679, Miami, FL 33265-0679
Telephone (305) 221-7645 Facsimile (305) 223-5403

RINKER ENVIRONMENTAL SERVICES

ACCEPTANCE CRITERIA

ACCORDING TO CHAPTER 62-775 FAC "SOILS THERMAL TREATMENT FACILITIES" ALL SOILS MUST BE TESTED FOR THE FOLLOWING CRITERIA PRIOR TO ACCEPTACE FOR THERMAL TREATMENT:

SOILS / SLUDGES

1. VOH (Volatile Organic Halocarbons) - 8010
2. VOA (Volatile Organic Aromatics) - 8020
3. TRPH (Total Recoverable Petroleum Hydrocarbons) - 9073, FLPRO
4. Total Metals (Arsenic, Barium, Cadmium, Chromium, Lead, Mercury, Selenium, Silver)
5. Total Organic Halides - 9056, 9252, 9253
6. Soils contaminated with used oil, hydraulic oil or mineral oil must be analyzed for PCB by EPA methods 3550, 3665, 8080

ALL PRE-TREATMENT SOILS SAMPLING MUST COMPLY WITH 62-775 FAC. COMPOSITES SOILS SAMPLING FREQUENCY SHALL BE IN ACCORDANCE WITH TABLE II. EACH COMPOSITE SOIL SAMPLE SHALL CONSIST OF SOILS SAMPLES TAKEN FROM AT LEAST FOUR LOCATIONS. EACH SAMPLE SHALL BE COLLECTED FROM LOCATIONS EQUALLY DISTRIBUTED THROUGHOUT THE SOIL SURFACE AREA AND FROM A DEPTH OF AT LEAST SIX INCHES BELOW THE SURFACE.

ACCEPTANCE CRITERIA
TABLE II

BY VOLUME (CUBIC YARDS)	BY WEIGHT (TONS)	NUMBER OF COMPOSITES REQUIRED
Less than 100	Less than 140	1
100 - 500	140 - 700	3
500 -1000	700 - 1400	5
For each add'l 500	For each add'l 700	1

THE FOLLOWING LIMITS WILL APPLY BASED UPON STATE AND COUNTY REQUIREMENTS:

8010	1 ppm	
8020	1000 ppm	
TRPH	No Limit	
Total Organic Halides	1000 ppm	
Total Metals	Arsenic	10 ppm
	Barium	4940 ppm
	Cadmium	37 ppm
	Chromium	50 ppm
	Lead	108 ppm
	Mercury	23 ppm
	Selenium	389 ppm
	Silver	353 ppm

IF ANY METAL EXCEEDS THE TOTAL AS PRESENTED ABOVE, TCLP MUST BE RAN TO CONFIRM NON-HAZARDOUS NATURE AND QUALIFY FOR POTENTIAL BLENDING.

NOTE: ANY SOIL WITH VOH, VOA OR TOTAL HALOGENS EXCEEDING 1000 PPM MUST BE SUBMITTED FOR DERM APPROVAL PRIOR TO ACCEPTANCE

WASTE OILS / WASTE FUELS

1. 601
2. 602
3. Total (Arsenic, Cadmium, Chromium, Lead)
4. Total Halogens
5. Flash Point (oF)

THE FOLLOWING LIMITS WILL APPLY:

Arsenic	5.0 ppm
Cadmium	2.0 ppm
Chromium	10 ppm
Lead	100 ppm
Total Halogens	1000 ppm
Flash Point	100 oF minimum

NOTE: ALL PETROLEUM CONTAMINATED MATERIALS MUST NOT BE CLASSIFIED AS HAZARDOUS WASTE BASED UPON PREVAILING FEDERAL AND STATE REGULATIONS.

SAMPLING PROCEDURES MUST FOLLOW ACCEPTED QUALITY ASSURANCE PRACTICES.

RINKER ENVIRONMENTAL SERVICES RESERVES THE RIGHT TO REQUIRE ADDITIONAL ANALYSIS PRIOR TO ACCEPTANCE.

OILY WASTE WATERS

1. 601
2. 602
3. Total Metals (Arsenic, Barium, Cadmium, Chromium, Lead, Mercury, Selenium, Silver)
4. Total Chlorides (Bulk loads only - NOT drums)

NOTE: RINKER ENVIRONMENTAL SERVICES RESERVES THE RIGHT TO REQUIRE ADDITIONAL ANALYSIS PRIOR TO ACCEPTANCE.

RINKER ENVIRONMENTAL SERVICES

MATERIALS RECEIVING REQUIREMENTS

In an effort to facilitate a timely receiving and accountability for all non-hazardous petroleum contaminated materials, Rinker has implemented the following receiving requirements:

1. ALL DELIVERIES OF NON-HAZARDOUS PETROLEUM CONTAMINATED MATERIAL (BULK OR DRUMS) MUST BE ACCOMPANIED BY A COMPLETED NON-HAZARDOUS TRANSPORT MANIFEST AND RINKER APPROVAL LETTER.

2. ALL MANIFESTS MUST CONTAIN THE SITE NAME AND ADDRESS WHERE GENERATED (AS APPEARS ON THE APPROVAL LETTER) AND MUST CONTAIN THE TRANSPORT COMPANY NAME, ADDRESS AND TRUCK NUMBER.

3. SOILS MATERIALS RECEIVED BY RINKER ARE TO BE FREE OF ALL MATERIAL (PIPE, FITTINGS, CANS, REBAR, ETC.) ALL CONCRETE WITH REBAR, ALL VISQUEEN (WITHIN PRACTICAL LIMITS), RUBBER AND TRASH LIKE ITEMS. LOADS CONTAINING ANY OF THESE ITEMS WILL EITHER BE REFUSED AND RETURNED TO THE GENERATOR, OR RINKER WILL SORT AND DISPOSE OF AT AN ADDITIONAL RATE OF $5.00 PER TON.

4. TRUCKS WILL BE PERMITTED TO WEIGH IN MONDAY THROUGH FRIDAY FROM 7:30 AM TO 4:00 PM.

5. ALL TRANSPORTERS MUST FOLLOW SITE RULES WHILE DELIVERING ON RINKER PROPERTY.

NOTE: IF THE PAPERWORK DETAILED ABOVE DOES NOT ACCOMPANY EACH DELIVERY, RECEIVING OF THE MATERIAL BY RINKER WILL BE REFUSED.

FOR YOUR CONVENIENCE, RINKER DOES MAINTAIN A SUPPLY OF NON-HAZARDOUS TRANSPORT MANIFESTS THAT CAN BE PROVIDED AT NO COST TO YOU UPON REQUEST.

RINKER MATERIALS CORP.

MATERIALS SUBSTITUTION
Transportation & Receiving Manifest

DOCUMENT NO. _____

GENERATOR			TRANSPORTER			RECEIVING FACILITY		
COMPANY NAME			COMPANY NAME			COMPANY NAME RINKER MATERIALS CORPORATION		
ADDRESS			ADDRESS			ADDRESS 1200 N.W. 137TH AVENUE		
CITY	ST.	ZIP CODE	CITY	ST.	ZIP CODE	CITY MIAMI	ST. FL	ZIP CODE 33182
TELEPHONE			TELEPHONE			TELEPHONE 305-225-1423		
CONTACT:			CONTACT:			CONTACT:		
I.D. NO.:			I.D. NO.:			I.D. NO.: FLD981758485		
CUST. P.O.			M.S. NO.:					

INFORMATION					REMARKS
MATERIAL DESCRIPTION AND DOT SHIPPING NAME	CLASS	DOT UN# NA	QUANT-VOLUME	CONTAIN-ER	

SAMPLE

GENERATOR

This is to certify that the above named material is properly classified, described, packaged, marked and labeled and are in proper condition for transporting according to the applicable regulations of the U.S. Department of Transportation, Environmental Protection Agency and contains no toxic or hazardous substances that would cause any waste to be classified as a characteristic or listed hazardous waste.

AUTHORIZED SIGNATURE (press hard - 5 copies)

TITLE | DATE OF SHIPMENT

TRANSPORTER

This is to certify the acceptance of the above material in the amounts and descriptions given and in proper condition for transport to be delivered to the treatment facility.

AUTHORIZED SIGNATURE (press hard - 5 copies)

TITLE | DATE OF SHIPMENT

TREATMENT FACILITY

This is to certify the acceptance of the above named material in the amounts and descriptions given from the named transporter for treatment, storage, disposal or recycling.

AUTHORIZED SIGNATURE (press hard - 5 copies)

TITLE | DATE OF SHIPMENT

DISPATCH INFO:

DRIVER: Sched. Arrive

TRUCK: Sched. Arrive

GROSS TARE

NET

SPECIAL INST.

BILLING:

COMPANY NAME

ADDRESS

CITY | ST | ZIP CODE

TELEPHONE

DISCREPANCY INFO:

EMERGENCY AND SPILL ASSISTANCE Call:

WHITE - Generator (Last) GREEN - Receiving PINK - Generator (First)

Rinker

Rinker Materials Corporation
1200 N.W. 137th Avenue
Miami, FL 33182

P.O. Box 650679
Miami, FL 33265-0679

Facsimile (305) 223-5403
Telephone (305) 221-7645

Date:_____

SOILS APPROVAL

Dear_____,

Please be advised that your recent submission for Thermal Treatment of petroleum contaminated soils has been approved for receipt by Rinker Materials Substitution, Inc..

This approval applies to the following project:

Site:_____ Volume:_____

_____

_____

_____

To facilitate the accurate and efficient handling of this project, **ALL** manifests and related shipping papers **MUST** state the "Site" information as provided above.

All approved material **MUST BE SCHEDULED** for delivery to Rinker. Failure to schedule loads will result in rejection.

To prevent off-loading delays and/or refusal of materials, a copy of **THIS** approval letter **MUST** accompany **EACH** shipment directed to our facility.

Thank you for allowing Rinker Materials Substitution, Inc. to be of assistance to you. If you have any questions, please let us know.

Sincerely,

RINKER MATERIALS SUBSTITUTION, INC.

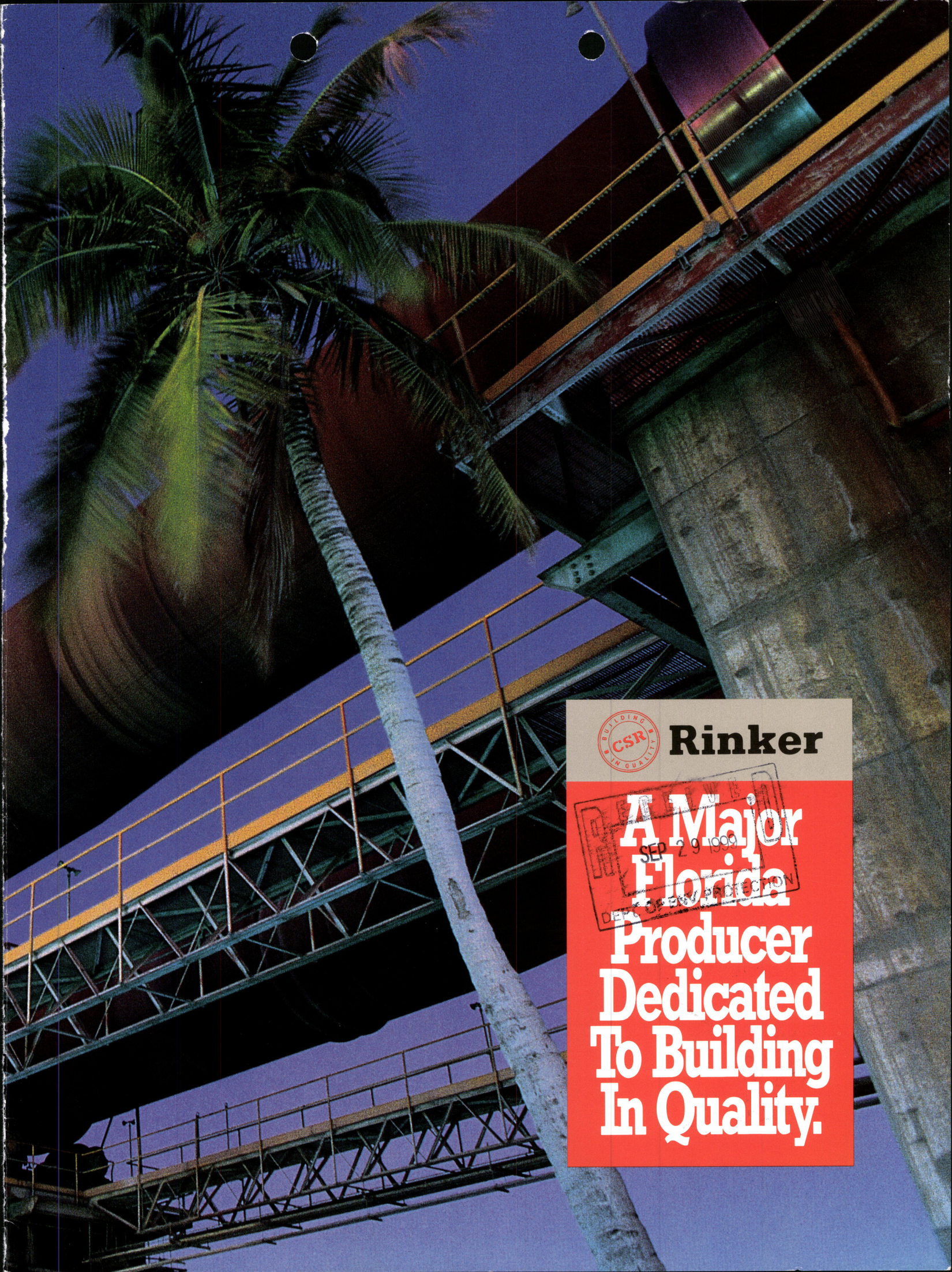

CSR BUILDING IN QUALITY

Rinker

A Major Florida Producer Dedicated To Building In Quality.

A Major Force In The Florida Construction Industry.

Our cement manufacturing plant started production in July 1958.

Purchased by Rinker Materials in 1976, the plant went through a 10-year expansion and modernization program to achieve the goal of optimizing efficiency and quality. An example is the process computer which automated the raw and finish mill systems.

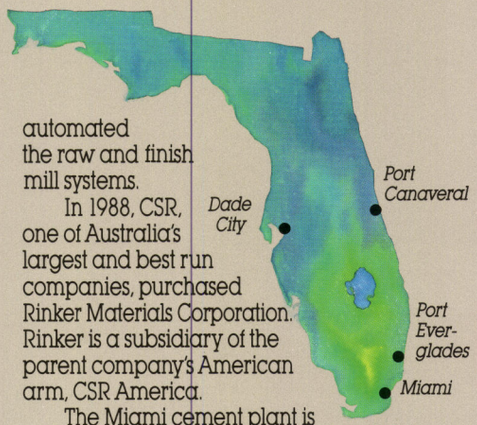

In 1988, CSR, one of Australia's largest and best run companies, purchased Rinker Materials Corporation. Rinker is a subsidiary of the parent company's American arm, CSR America.

The Miami cement plant is located on 3400 acres of land, 150 of which are used for cement operations. The land is rich in oolitic limestone which is the major ingredient in our cement manufacturing process. Additionally, the Cement Division has two import terminals and four transport terminals. The import terminals are located at Port Everglades (Fort Lauderdale) and Port Canaveral. This diversity affords Rinker the ability to provide timely service to our customers.

The Rinker Tradition Of Environmental Care.

The Rinker environmental ethic has been a force within the company for decades. You can see it at our plant and terminals.

For many years, we have recycled waste by-products at our manufacturing plant, while producing approximately 650,000 tons of cement each year.

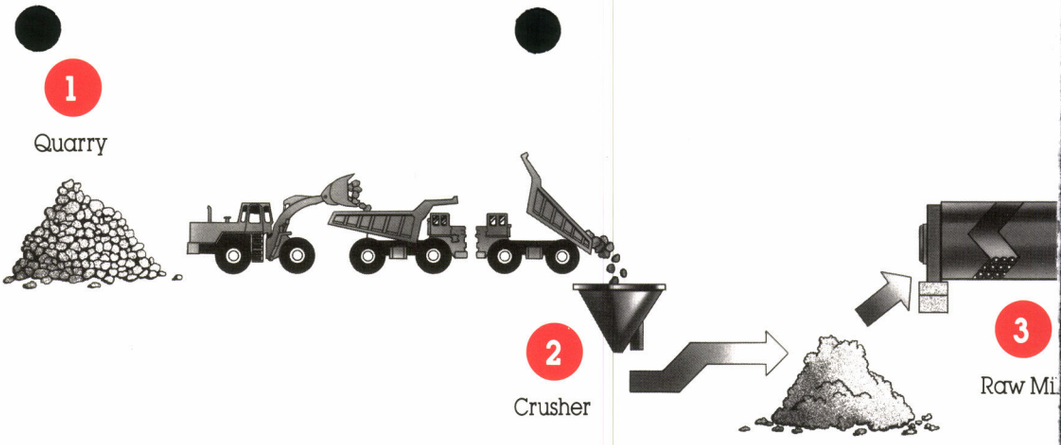

Rinker Manufacturing: From

Raw Materials.

Coral rock from our quarry.

The essential ingredients of portland cement are calcium, silicon, aluminum and iron. The major component, calcium carbonate, comes from the limestone we excavate from our quarry.

To achieve the ideal chemical composition, quantities of other materials are added to the rock. Examples of other materials utilized in this process are: bottom ash slag, flyash, bauxite, staurolite, and silica sand.

Excavating, Crushing And Storing Rock.

At our quarry, blasting shatters the rock. A large walking dragline with a 10-cubic-yard bucket digs the rock from beneath the water and piles it onto the bank. It is then loaded on haul trucks and conveyed to the jaw crusher, which breaks the rock into baseball-size fragments. A hammer mill crushes the fragments to gravel, leaving all pieces finer than ¾ inches in diameter. The material is then conveyed to our materials storage building, which measures 94 feet wide and 864 feet long.

The rock is crushed and conveyed to our cavernous materials storage building.

A walking dragline removes the quarry rock from below the water.

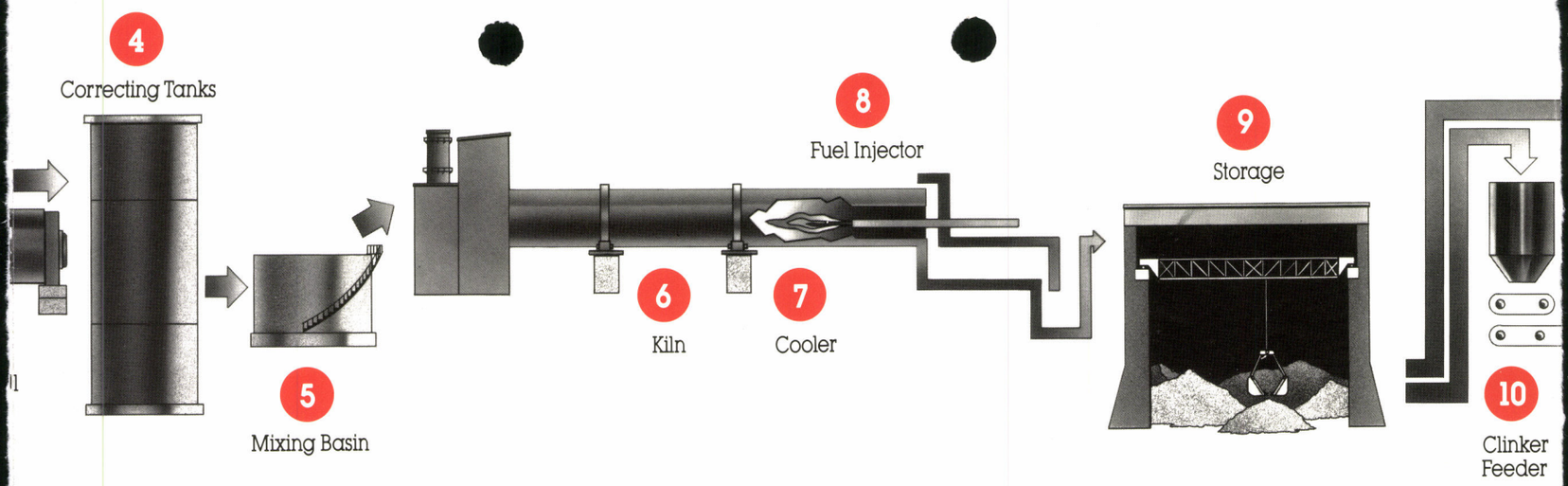

Solid Rock, Through Tremendous Heat, To A S

Raw Grinding.

Materials moved from storage by the traveling cranes into raw mill feed bins are delivered through computer controlled proportioning feeders to the grinding mills. There, water is added and the materials are ground by steel balls into a thick creamy liquid called slurry. The slurry is held in correcting tanks while laboratory testing determines the final adjustments necessary to assure a quality product.

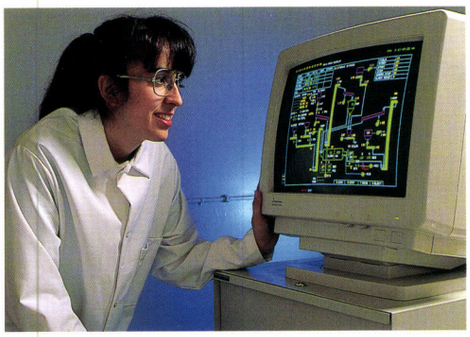

A process computer controls the raw and finish mill systems.

These tanks utilize high pressure air to agitate and homogenize the slurry. Adjustments in composition are then made by transferring measured quantities from two or more tanks into the mixing basin. The blended slurry is then ready to feed into the kiln.

Slurry is held in correcting tanks for adjustments in composition.

Heat Transforms The Slurry To Clinker.

The cement kiln has been called the world's largest piece of moving industrial equipment.

Rinker's kilns stretch side by side like giant tubes, 475 feet long and 12 feet in diameter. They rotate constantly at about 1½ revolutions per minute.

The internal temperatures are even more impressive than the size. Temperatures exceed 2800 degrees Fahrenheit. This is 20 percent hotter than a steel mill and 40 percent hotter than a power plant using fossil fuel.

Special refractory bricks line the inside of the steel tubes to protect them from the destructive temperatures.

The fuel that produces the heat (approximately 300 tons of coal per day) is injected at the discharge end of the kiln. A portion of this fuel can be replaced by used oils and even discarded vehicle tires. These recyclable materials provide an excellent fuel source while allowing us to dispose of environmental nuisances. We also can burn natural gas.

The slurry is fed into the cold end of each kiln by feeders synchronized with the kilns' rotation. As this rotation moves the slurry down the kiln, it enters the chain system. Long chains hanging like curtains transfer the heat from the air stream to the slurry. Prior to reaching the white heat of the burning zone, the dried material undergoes a chemical reaction. There the raw materials combine to form a completely new set of chemical compounds, hard nodules called clinker.

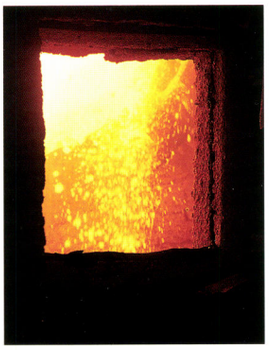

Under the intense heat of the kiln, the material undergoes a chemical reaction.

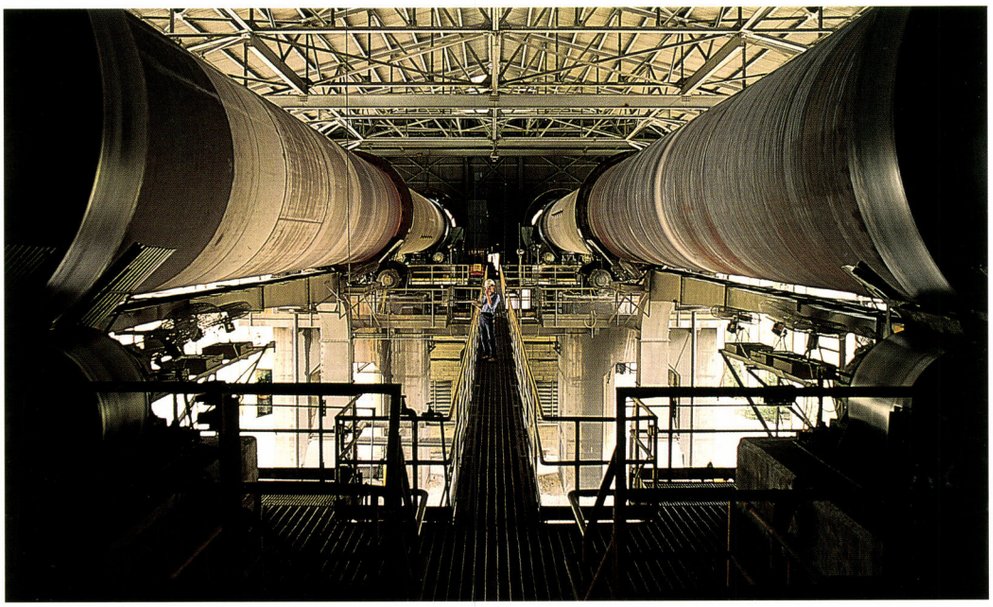

Each of the twin kilns produces 850 tons of clinker a day.

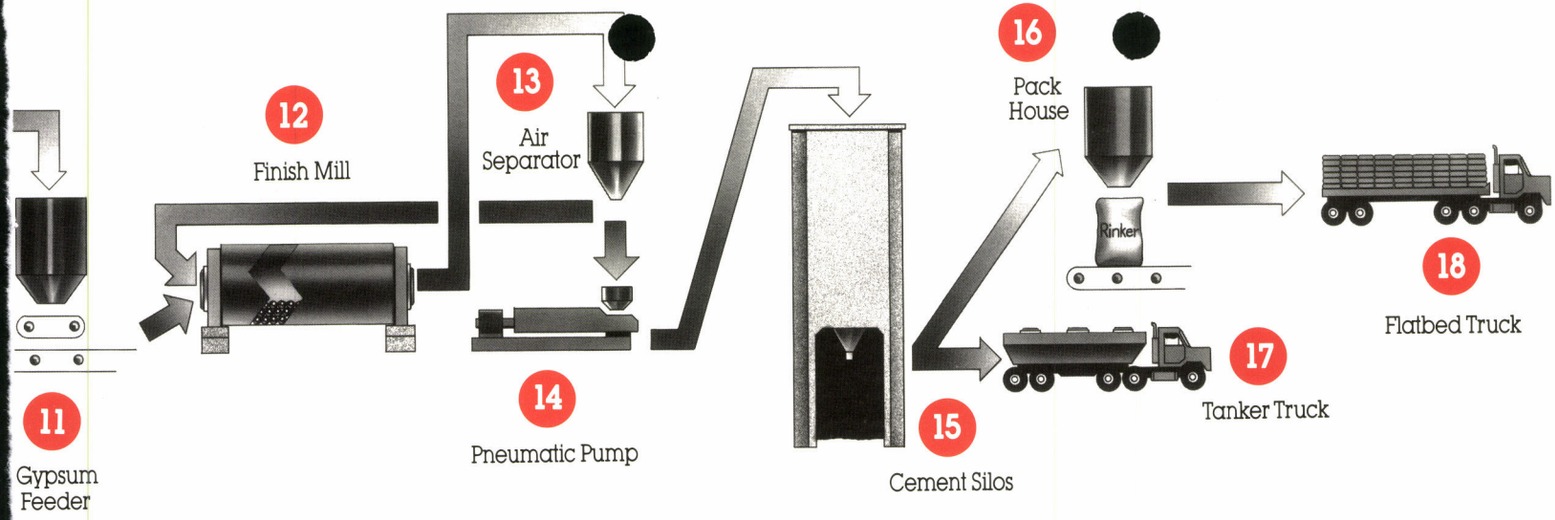

uper-Fine Powder Called Portland Cement.

Pollution control devices such as electrostatic precipitators and baghouses (giant filters) clean any gasses before they are released into the atmosphere.

Clinker Becomes Cement At The Finish Mills.

The grinding mills contain steel balls to pulverize the clinker to an extremely fine consistency. Small amounts of gypsum are added to control the rate at which the cement will set when mixed into concrete. An air separator removes any coarse cement particles and returns them to the mill for regrinding. This process results in the familiar gray powder that is portland cement.

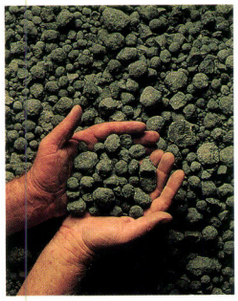

The newly-formed chemical compounds are called clinker.

Finer than face powder, portland cement is composed of micro-sized particles as small as 1/25,000 of an inch. The cement is so fine that it will pass through some membranes that can hold water.

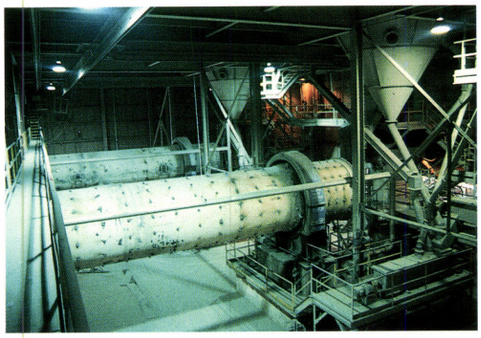

An air separator removes coarse particles, resulting in the powder known as portland cement.

We store the cement in our 30 concrete silos, each with a capacity of 2,500 tons.

Tank trucks are filled from our 30 storage silos, each with a capacity of 2,500 tons.

We Distribute Our Product.

At our Miami terminal we have systems for efficient shipment of either packaged or bulk cement.

For package loading, cement is pumped to the auxiliary storage bins at the packhouse. Packing machines automatically fill the bags and stack them on pallets to be loaded on flatbed trucks for delivery.

Bags of Rinker Portland Cement are ready to be loaded on flatbed trucks.

To load bulk cement, special tank trucks are filled on automated scales under the storage silos. Cement flows into the trailers through air slides and dust-free loading spouts.

A truck can be loaded, weighed, washed and ready for transportation in less than 10 minutes.

Quality Products From Rinker Materials.

Type I	Masonry
Type IP	Masonry High Strength
Type II	Stucco
Type III	Roof Tile
	White Portland
	White Masonry

A Company With A Mission.

At Rinker Materials Corporation, we are always aware that the portland cement we manufacture is a major element in modern construction and economic growth. Rinker is totally committed to setting the highest standards of quality.

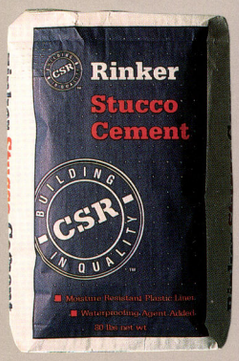

The use of cement is so varied and widespread that people often take it for granted. Yet, we see it as a miraculous construction material, providing a unique combination of valuable advantages. When mixed with sand and rock to form concrete, cement provides our customers with a product that is: **Strong.** Able to resist the forces of nature, including hurricanes. **Durable.** Rust, rot and termite proof. **A Fire Preventive.** An advantage in safety for people and property. **Versatile.** Able to be molded into nearly any shape or size, a major advantage in both engineering and design aesthetics. **Abundant.** Produced from natural materials that are in no danger of depletion, unlike lumber. **Economical.** Pound for pound the cheapest major building material.

Building In Quality – Our Full-Time Job.

We supply quality products and services to the construction industry in the southeastern United States. At Rinker Materials, our success must be based on the continuous improvement concept of "building in quality."

Our business is manufacturing and distributing cement, providing environmentally sound resource recovery services, and transporting cement and construction products.

We focus on satisfying our customers' requirements and developing new customers through our multipurpose cement manufacturing operations, strategically located terminals, and extensive transportation networks. We are committed to developing customer-driven products and services.

Our continuing success will be based on our total dedication to our customers, employees, suppliers, shareholders and our communities.

Our Laboratory Controls Quality At Every Step.

Tests conducted at every step of the manufacturing process, from raw materials to finished product, ensure our customers the highest quality cement.

Department of Environmental Protection

Lawton Chiles
Governor

Southeast District
P.O. Box 15425
West Palm Beach, Florida 33416

Virginia B. Wetherell
Secretary

JUN 29 1998

Mr. James S. Jenkins, III
Rinker Materials Corporation
P.O. Box 24635
West Palm Beach, FL 33416

Dear Mr. Jenkins,

The attached Soil Thermal Treatment Facility Inspection Report documents a routine inspection of your facility at 1200 NW 137th Avenue, Miami, FL, by the Department on June 10, 1998. During this inspection, as noted on the attached inspection report, a review of the quarterly groundwater monitoring results indicated elevated detection limits continue to be reported by your laboratory for some of the volatile organic parameters, such as Benzene. Please ensure detection limits reported in the future during laboratory analyses are comparable with groundwater standards and criteria and make certain your quality assurance approvals are up-to-date and current in accordance with Chapter 62-160, F.A.C. Thank you for your continued cooperation.

If you have any questions or need further information, please contact Lee Martin at 561-681-6676.

Sincerely,

Paul Alan Wierzbicki

Paul Alan Wierzbicki, P.G.
Waste Cleanup Supervisor

PAW/wlm

atch: STTF Inspection dated 6/10/98

cc: Paul Lasa, DERM, Miami
Tom Conrardy, DEP/BWC, Tallahassee
Zoe Kulakowski, DEP/BWC, Tallahassee
Jeff Smith, DEP/WPB
Dave Marple, Rinker Materials, Miami
West Palm Beach File

Department of Environmental Protection

Lawton Chiles
Governor

Southeast District
P.O. Box 15425
West Palm Beach, Florida 33416

Virginia B. Wetherell
Secretary

SOIL THERMAL TREATMENT FACILITY INSPECTION REPORT

1. **TYPE INSPECTION:** ____ COMPLAINT X ROUTINE ____ FOLLOW-UP ____ PERMITTING

2. **FACILITY NAME** Rinker Portland Cement Corp.

   DER/EPA ID FLD981758485 **GMS ID** _____

3. **ADDRESS** 1200 NW 137th Ave, Miami, Fl, 33182
   Mailing: P.O. Box 24635, West Palm Beach, Fl 33416-4635

COUNTY Dade **PHONE** 305- 221-7645 **DATE** 6/10/98 **TIME** 10:30AM

4. **TYPE OF FACILITY** Thermal Soil Treatment Facility

5. **DESCRIPTION OF OPERATION:**
Facility Operations include limerock mining and contaminated soil processing to produce cement.
Rinker uses kilns fired by coal, natural gas, or used oil in production.

6. **APPL. REGULATIONS:** _____ 62-2, F.A.C. X 62-775, F.A.C.

7. **RESPONSIBLE OFFICIAL:** (Name and Title)
James Jenkins, Vice President

8. **SURVEY PARTICIPANTS AND PRINCIPAL INSPECTOR:**
Lee Martin, Jorge Patino, Geetha Selvendran, FDEP
Dave Marple, Rinker Materials

9. **FACILITY LATITUDE** 25°46'57" conf. **LONGITUDE** 80°25'20" conf. 8/93

10. **TYPE OWNERSHIP:** FEDERAL STATE COUNTY MUNICIPAL PRIVATE

11. **NOTICE NO:** SO13-290034 **DATE ISSUED:** 6/28/96 **EXP. DATE:** 6/7/2001

Rev 8/18/94

A routine inspection was conducted at the Rinker Portland Cement Corporation's soil thermal treatment facility regulated pursuant to Chapter 62-775, Florida Administrative Code (FAC) and Chapter 62-701,FAC. This facility operates a rotary kiln and utilizes the petroleum contaminated soil and coal tar contaminated soil in the manufacture of cement.

BACKGROUND INFORMATION:

Rinker was issued a General Permit #SO13-290034 to operate a soil thermal treatment facility on June 28, 1996 which expires on June 7, 2001. The Rinker facility was operating as an existing facility as defined in 62-775.200, FAC prior to the effective date of this rule. Additionally, the facility treats coal tar contaminated soil under a Solid Waste Material Recovery Facility Permit #SO13-300512 issued June 4, 1997 which expires on June 4, 2002. A complete process description is provided in the Rinker permit application; however, the process was reviewed at the inspection as follows:

According to Dave Marple, prior to accepting any soil for thermal treatment pursuant to 62-775, FAC, Rinker requires a soil analysis profile. Based on this profile, and specific conditions from DEP and Metro Dade Department of Environmental Resources Management (DERM), soils are brought by truck to the soil storage facility. DERM has granted approval authority to Rinker, subject to specific conditions in their DERM solid waste permit. Rinker claims to accept no hazardous wastes as defined in 40 CFR Part 261.

Rinker has operated a materials substitution program since 1991. This program researches and evaluates different alternative materials for use as raw materials in the production of cement or for use as an alternative fuel source in the kilns. Two alternative materials currently in use include the substitution of fuel contaminated soils for clean silica sand and the substitution of "on-spec" waste oil for fuel oil in kiln burners. Other alternative material substitutions under discussion and/or evaluation for possible future use include: (1) substitution of oily waste water for part of the slurry makeup water, (2) burning tires for fuel, (3) replacing FP&L slag with other power plant ashes such as ash from MSW incinerators, (4) using spent petroleum catalyst as an aluminum source, (5) blending oily sludges with contaminated soils, and (6) using other petroleum contaminated material.

Rinker has received approval for burning old tires as a fuel and iron supplement. The tires are injected whole, two at a time, through a patented system during each rotation of the kiln. The point of injection is approximately midway along the kiln where the temperature is approximately 1800 ^{o} F. Additionally, the tires are packed with petroleum contaminated booms, diapers, absorbent material, jet fuel filters, etc.; however, operational problems with lowering of temperatures has suspended continuous burning but some batch burning is still performed.
Rinker has received a determination that the use of spent petroleum catalyst as an aluminum source is not regulated under 62-775, F.A.C.; however, the characteristics provided would make storage on the bare ground inappropriate. Several loads (10-12) of spent catalyst from a Hess operation in Puerto Rico were received in the past, but handling problems due to the extremely dusty nature of the material has delayed subsequent shipments while a pneumatic off-loading and handling system is being investigated.
Rinker has applied for and received a Solid Waste Material Recovery Facility Permit No. SO13-300512 which allows Rinker to accept and treat certain coal tar contaminated soils. Rinker accepted coal tar contaminated soils from mid June-mid August 1997 and revised the treated soil reporting form to reflect the coal tar parameters.
Rinker has applied for an alternative procedure to allow processing of certain petroleum related sludges/residues along with petroleum contaminated soil. This request is under review by the Bureau of Waste Cleanup.

The afterburner system for the petroleum contaminated soils is in operation, the soils process through a preliminary kiln (stone dryer) with afterburner first, then go through the cement kiln. Preliminary in house analysis of the soils, although not required, indicate the soils meet clean soil criteria before they are processed through the cement kiln.

SOIL STORAGE FACILITY:

Incoming soils to be thermally treated by Rinker arrive by independent contractors via truck to the soil storage facility. Rinker has changed their policy concerning drum handling due to the increase in drill cuttings received in drums and the subsequent bottle neck caused in the off loading area. The drums are placed in the Northwest corner of the facility and emptied as time permits and during this inspection all drums observed were located inside the building. Once emptied the drums are then rinsed at the drum washing area and crushed for salvage. The rinse water is contained and used on site in slurry production, the sediments are returned to the soil storage facility. The current facility located South of the railroad tracks became operational February 9, 1992 and consists of a 100' by 300' monolith concrete slab sealed to solid concrete walls on three sides with a concrete curb across the front. The facility has an open front to accommodate trucks and equipment, enclosed sides, and a roof. The floor slopes to the southeast corner where a sump is located to collect any contaminated water from wind blown rain seeping through the contaminated soils. The leachate collection tank has been relocated outside the Southeast corner of the facility. The tank is within a secondary containment structure and piping outside the facility is double-walled. An additional interior concrete curb sloping away from the Northeast front wall toward the interior of the facility had been installed. An additional stem wall has been constructed along the Northeast front wall and rain gutters have been redirected after investigation following the December 1996 inspection. This will continue to be checked in the future. The four groundwater wells off the corners of the facility have flush mounted manhole lids. The monitor well off the Northwest corner of the building was capped but not locked.

The metal and plastics removed from the soils are collected for transport to the County landfill, Rinker should maintain receipts for proper disposal. The larger concrete debris screened out initially are taken to the rock crusher to be pulverized separately and mixed back in with the contaminated soils at the soil storage facility. Spent oil filters are drummed at the soil storage facility and processed for recycling to Cliff Berry, Inc. A covered dumpster has been located in the Northeast corner of the soil storage building to allow collection of oily wastes/sludges which are mixed with the fuel oil and burned in the kiln.

RECORDKEEPING:

Rinker has received a Department alternative procedure approval (File No. AP-STTF001) for testing of contaminated soils. Rinker relies solely on the test results supplied by other labs; however, Rinker requires acknowledgment of a Department approved Quality Assurance plan from the labs supplying the data. Rinker performs spot checks of some samples. Rinker also performs groundwater analyses through their in-house laboratory, under a Department approved Quality Assurance Plan, for their Groundwater Monitoring Plan. A review of analytical data indicates elevated detection limits are being reported for some parameters, such as Benzene. Detection limits need to be revised to be comparable with applicable groundwater standards. A review of records for untreated soil for April 1998 indicated some batches of untreated soils were received which exceeded the clean soil criteria for metals; however, spot checks on some of these batches were made and blending records were provided as required by 62-775.400(4), FAC, which confirms blended soils comply with total metals standards. Rinker began treating low level PCB contaminated soils in April 1994 and developed a form to tracking the source, soil PCB content, quantity, PCB concentration, pounds PCB treated, and cumulative year to date PCB treated. Appropriate reporting forms for untreated PCB contaminated soils were submitted for this inspection period. Rinker began

treating coal tar contaminated soils in mid-June 1997 and developed a form to track the required analytical data for the treated soils. No treated soils analyzed for this quarter exceeded the VOA or TRPH criteria for clean soil in 62-775, FAC.

SUMMARY:

The soil storage facility provides for proper handling and storage of petroleum contaminated soils, low level PCB contaminated soils, and coal tar contaminated soils and allows Rinker to process contaminated soils in an environmentally sound manner. No other signs of discharge were noted and all facility personnel were very cooperative.

EXHIBIT E

Florida Department of Environmental Regulation

STATIONARY SOIL THERMAL TREATMENT FACILITY

INSPECTION REPORT

Name of Facility RINKER MATERIALS

Location 1200 NW 137th AVE, MIAMI, FL 33182

General Permit No. SO 13-290034 Date of Inspection 6/10/98

Contact Person DAVE MARPLE

Person Completing Report LEE MARTIN

Instructions: Complete the appropriate spaces for each item listed below. Use comments space to provide additional information for each item. Additional paper may be used if necessary.

Yes	No	SITE SURVEY	
✓		1.	Does information provided on general permit notice of intent form coincide with actual facility?
✓		2.	Is soil sampling procedure correct?
✓		3.	Are monitoring wells properly installed (proper number and location)?
*		4.	Are monitor wells being properly sampled and analysed for required parameters? DETECTION LIMITS ELEVATED
✓		5.	Is untreatd soil stockpiled separately from treated soil and properly identified?
✓		6.	Is untreated soil adequately covered by roofing?
✓		7.	Do floors for storage appear to be properly constructed and in good condition?
✓		8.	Are floors properly bermed to provide runoff control?
✓		9.	Is a leachate collection system provided?

Yes	No	REPORTING FORMS	
✓		10.	Are untreated soil reporting forms being properly completed? starting date 4/1/98 end date 4/30/98
✓		11.	Are treated soil reporting forms being properly completed? starting date 2/9/98 end date 5/3/98 using new form to include coal tar parameters

12. Indicate frequency clean soil criteria is being met?
   a. 100 % TRPH - 10 mg/kg, or
   b. — % TRPH - 50 mg/kg, PAH - 6 mg/kg, and VOH - 50 ug/kg

13. Indicate ranges and approximate median values of untreated soil analyses for the following parameters.
   a. TRPH 4 mg/kg to 211000 mg/kg, median 1900 mg/kg
   b. VOA BDL mg/kg to 18807 mg/kg, median 1 mg/kg
   c. Arsenic BDL mg/kg to 21.5 mg/kg
   d. Barium BDL mg/kg to 394 mg/kg
   e. Cadmium BDL mg/kg to 6.6 mg/kg
   f. Chromium BDL mg/kg to 96.6 mg/kg
   g. Lead BDL mg/kg to 1500 mg/kg
   h. Mercury BDL mg/kg to 3.2 mg/kg
   i. Selenium BDL mg/kg to 5.7 mg/kg
   j. Silver BDL mg/kg to 10.1 mg/kg

14. Indicate ranges and approximate median values of treated soil analyses for the following parameters.
   a. TRPH BDL mg/kg to BDL mg/kg, median — mg/kg
   b. VOA BDL mg/kg to BDL mg/kg, median — mg/kg
   c. Arsenic 2.1 mg/kg to 5.4 mg/kg
   d. Barium 159 mg/kg to 268 mg/kg
   e. Cadmium .03 mg/kg to .2 mg/kg
   f. Chromium 48.7 mg/kg to 141 mg/kg
   g. Lead 4.7 mg/kg to 20.7 mg/kg
   h. Mercury BDL mg/kg to BDL mg/kg
   i. Selenium BDL mg/kg to 5.5 mg/kg
   j. Silver BDL mg/kg to BDL mg/kg
   k. _____ _____ mg/kg to _____ mg/kg
   i. _____ _____ mg/kg to _____ mg/kg

Comments: * RINKER IS USING ON SITE LAB FOR GW ANALYSES BUT REPORTING ELEVATED DETECTION LIMITS FOR BENZENE. NEEDS TO ESTABLISH DETECTION LIMITS COMPARABLE WITH GW STANDARDS.

TCLP ANALYSES CONFIRMED FOR BATCHES 199800036 & 199800043 WITH ELEVATED LEAD RESULTS (1150 & 1500 mg/kg). BLENDED SOIL RECORDS INCLUDED.

William L. Martin
Signature

6/26/98
Date

Florida Department of Environmental Regulation
Soil Therm atment Facility
Treated So rting Form

Name of Facility: RINKER MATERIALS CORP
Air Permit No: A013-172154
Soil Treatment Permit No: SW-01117-91
Stationary:XXX or Mobile Facility:

Month ________ Year ________

1	2	3	4	5	6								7								8	9	10	11
Day of Month	Soil Batch ID#	Sample Number	Length of Run Hours	Amount Volume or Weight cy/tn	Analytical Results																			
					Total Metals								TCLP Metals								Totals			
					As	Ba	Cd	Cr	Pb	Hg	Se	Ag	As	Ba	Cd	Cr	Pb	Hg	Se	Ag	VOA	RPH	PAH	VOH
4/20 4/27		42	168		2.9	218	.04	79	8.1	BDL	.9	BDL	BDL	14.3	BDL	BDL	BDL	BDL	BDL	BDL	BDL	BDL		
					Be	CN	Phenols	Dibenzo Furan					Be	Benzene										TOH

1	2	3	4	5	6								7								8	9	10	11
Day of Month	Soil Batch ID#	Sample Number	Length of Run Hours	Amount Volume or Weight cy/tn	Analytical Results																			
					Total Metals								TCLP Metals								Totals			
					As	Ba	Cd	Cr	Pb	Hg	Se	Ag	As	Ba	Cd	Cr	Pb	Hg	Se	Ag	VOA	RPH	PAH	VOH
4/28 5/3		42	168		2.1	232	.03	78.3	7.4	BDL	.9	BDL	BDL	14.8	BDL	.2	BDL	BDL	BDL	BDL	BDL	BDL		
					Be	CN	Phenols	Dibenzo Furan					Be	Benzene										TOH

1	2	3	4	5	6								7								8	9	10	11
Day of Month	Soil Batch ID#	Sample Number	Length of Run Hours	Amount Volume or Weight cy/tn	Analytical Results																			
					Total Metals								TCLP Metals								Totals			
					As	Ba	Cd	Cr	Pb	Hg	Se	Ag	As	Ba	Cd	Cr	Pb	Hg	Se	Ag	VOA	RPH	PAH	VOH
					Be	CN	Phenols	Dibenzo Furan					Be	Benzene										TOH

1	2	3	4	5	6								7								8	9	10	11
Day of Month	Soil Batch ID#	Sample Number	Length of Run Hours	Amount Volume or Weight cy/tn	Analytical Results																			
					Total Metals								TCLP Metals								Totals			
					As	Ba	Cd	Cr	Pb	Hg	Se	Ag	As	Ba	Cd	Cr	Pb	Hg	Se	Ag	VOA	RPH	PAH	VOH
					Be	CN	Phenols	Dibenzo Furan					Be	Benzene										TOH

1	2	3	4	5	6								7								8	9	10	11
Day of Month	Soil Batch ID#	Sample Number	Length of Run Hours	Amount Volume or Weight cy/tn	Analytical Results																			
					Total Metals								TCLP Metals								Totals			
					As	Ba	Cd	Cr	Pb	Hg	Se	Ag	As	Ba	Cd	Cr	Pb	Hg	Se	Ag	VOA	RPH	PAH	VOH
					Be	CN	Phenols	Dibenzo Furan					Be	Benzene										TOH

DER Form 17-775.900(3)

Florida Department of Environmental Regulation
Soil Therm[illegible]atment Facility
Treated S[illegible]eporting Form

Name of Facility: RINKER MATERIALS CORP
Air Permit No: A013-172154
Soil Treatment Permit No: SW-01117-91
Stationary:XXX or Mobile Facility:

Month _____ Year _____

1 Day of Month	2 Soil Batch ID#	3 Sample Number	4 Length of Run Hours	5 Amount Volume or Weight cy/tn	6 Analytical Results: Total Metals As	Ba	Cd	Cr	Pb	Hg	Se	Ag	Be	CN	Phenols	Dibenzo Furan
3/17																
3/22		42	168		5.0	193	.04	94.6	9.16	BDL	1.2	BDL	2.15	BDL	BDL	BDL

7 TCLP Metals As	Ba	Cd	Cr	Pb	Hg	Se	Ag	Be	Benzene	8 Totals VOA	9 RPH	10 PAH	11 VOH	TOH
BDL	BDL	BDL	BDL	BDL	BDL	BDL	BDL	BDL	BDL	BDL	BDL	BDL	BDL	BDL

1 Day of Month	2 Soil Batch ID#	3 Sample Number	4 Length of Run Hours	5 Amount Volume or Weight cy/tn	6 Analytical Results: Total Metals As	Ba	Cd	Cr	Pb	Hg	Se	Ag	Be	CN	Phenols	Dibenzo Furan
3/23																
3/31		42	168		4.2	197	.09	90.5	9.11	BDL	.7	BDL	2.03	BDL	BDL	BDL

7 TCLP Metals As	Ba	Cd	Cr	Pb	Hg	Se	Ag	Be	Benzene	8 Totals VOA	9 RPH	10 PAH	11 VOH	TOH
BDL	BDL	BDL	BDL	BDL	BDL	BDL	BDL	BDL	BDL	BDL	BDL	BDL	BDL	BDL

1 Day of Month	2 Soil Batch ID#	3 Sample Number	4 Length of Run Hours	5 Amount Volume or Weight cy/tn	6 Analytical Results: Total Metals As	Ba	Cd	Cr	Pb	Hg	Se	Ag	Be	CN	Phenols	Dibenzo Furan
4/1																
4/5		42	168		3.3	188	.2	65.8	8.3	BDL	3.2	BDL				
Coal Tar Deplet																

7 TCLP Metals As	Ba	Cd	Cr	Pb	Hg	Se	Ag	Be	Benzene	8 Totals VOA	9 RPH	10 PAH	11 VOH	TOH
BDL	BDL	BDL	BDL	.07	BDL	BDL	BDL			BDL	BDL		BDL	

1 Day of Month	2 Soil Batch ID#	3 Sample Number	4 Length of Run Hours	5 Amount Volume or Weight cy/tn	6 Analytical Results: Total Metals As	Ba	Cd	Cr	Pb	Hg	Se	Ag	Be	CN	Phenols	Dibenzo Furan
4/[illegible]																
4/[illegible]		42	168		3.6	165	.06	59.6	15.8	BDL	5.5	BDL				
Coal Tar Deplet																

7 TCLP Metals As	Ba	Cd	Cr	Pb	Hg	Se	Ag	Be	Benzene	8 Totals VOA	9 RPH	10 PAH	11 VOH	TOH
BDL	BDL	BDL	BDL	BDL	BDL	BDL	BDL			BDL	BDL			

1 Day of Month	2 Soil Batch ID#	3 Sample Number	4 Length of Run Hours	5 Amount Volume or Weight cy/tn	6 Analytical Results: Total Metals As	Ba	Cd	Cr	Pb	Hg	Se	Ag	Be	CN	Phenols	Dibenzo Furan
4/13																
4/19		42	168		4.1	246	.05	70.2	4.7	BDL	1.8	BDL				

7 TCLP Metals As	Ba	Cd	Cr	Pb	Hg	Se	Ag	Be	Benzene	8 Totals VOA	9 RPH	10 PAH	11 VOH	TOH
BDL	BDL	BDL	BDL	BDL	BDL	BDL	BDL			BDL	BDL			

DER Form 17-775.900(3)

Florida Department of Environmental Regulation
Soil Therm[illegible]atment Facility
Treated So[illegible]eporting Form

Name of Facility: RINKER MATERIALS CORP
Air Permit No: A013-172154
Soil Treatment Permit No: SW-01117-91
Stationary:XXX or Mobile Facility:

Month _____ Year _____

1	2	3	4	5	6								7								8	9	10	11
Day of Month	Soil Batch ID#	Sample Number	Length of Run Hours	Amount Volume or Weight cy/tn	Analytical Results																			
					Total Metals								TCLP Metals								Totals			
					As	Ba	Cd	Cr	Pb	Hg	Se	Ag	As	Ba	Cd	Cr	Pb	Hg	Se	Ag	VOA	RPH	PAH	VOH
2/9 2/15		42	168		5.4	243	.07	75.7	14.1	BDL	.4	BDL	BDL	BDL	BDL	.2	BDL	BDL	BDL	BDL	BDL	BDL	BDL	BDL
					Be	CN	Phenols	Dibenzo Furan					Be	Benzene										TOH
					7.27	BDL	BDL	BDL					BDL	BDL										BDL

1	2	3	4	5	6								7								8	9	10	11
Day of Month	Soil Batch ID#	Sample Number	Length of Run Hours	Amount Volume or Weight cy/tn	Analytical Results																			
					Total Metals								TCLP Metals								Totals			
					As	Ba	Cd	Cr	Pb	Hg	Se	Ag	As	Ba	Cd	Cr	Pb	Hg	Se	Ag	VOA	RPH	PAH	VOH
2/16 2/22		42	168		3.8	169	.1	48.7	20.7	BDL	BDL	BDL	BDL	BDL	BDL	.2	BDL	BDL	BDL	BDL	BDL	BDL	BDL	BDL
					Be	CN	Phenols	Dibenzo Furan					Be	Benzene										TOH
					3.35	BDL	BDL	BDL					BDL	BDL										BDL

1	2	3	4	5	6								7								8	9	10	11
Day of Month	Soil Batch ID#	Sample Number	Length of Run Hours	Amount Volume or Weight cy/tn	Analytical Results																			
					Total Metals								TCLP Metals								Totals			
					As	Ba	Cd	Cr	Pb	Hg	Se	Ag	As	Ba	Cd	Cr	Pb	Hg	Se	Ag	VOA	RPH	PAH	VOH
2/23 3/1/99		42	168		3.2	172	.08	141	18.2	BDL	BDL	BDL	BDL	BDL	BDL	BDL	BDL	BDL	BDL	BDL	BDL	BDL	BDL	BDL
					Be	CN	Phenols	Dibenzo Furan					Be	Benzene										TOH
					3.72	BDL	BDL	BDL					BDL	BDL										BDL

1	2	3	4	5	6								7								8	9	10	11
Day of Month	Soil Batch ID#	Sample Number	Length of Run Hours	Amount Volume or Weight cy/tn	Analytical Results																			
					Total Metals								TCLP Metals								Totals			
					As	Ba	Cd	Cr	Pb	Hg	Se	Ag	As	Ba	Cd	Cr	Pb	Hg	Se	Ag	VOA	RPH	PAH	VOH
3/ 3/		42	168		4.4	159	.08	75.4	17.4	BDL	BDL	BDL	BDL	BDL	BDL	.2	BDL	BDL	BDL	BDL	BDL	BDL	BDL	BDL
					Be	CN	Phenols	Dibenzo Furan					Be	Benzene										TOH
					3.29	BDL	BDL	BDL					BDL	BDL										BDL

1	2	3	4	5	6								7								8	9	10	11
Day of Month	Soil Batch ID#	Sample Number	Length of Run Hours	Amount Volume or Weight cy/tn	Analytical Results																			
					Total Metals								TCLP Metals								Totals			
					As	Ba	Cd	Cr	Pb	Hg	Se	Ag	As	Ba	Cd	Cr	Pb	Hg	Se	Ag	VOA	RPH	PAH	VOH
3/9 3/15		42	168		3.4	172	.06	83.1	17.3	BDL	BDL	BDL	BDL	BDL	BDL	.3	BDL	BDL	BDL	BDL	BDL	BDL	BDL	BDL
					Be	CN	Phenols	Dibenzo Furan					Be	Benzene										TOH
					3.33	BDL	BDL	BDL					BDL	BDL										BDL

DER Form 17-775.900(3)

Department of Environmental Protection

Lawton Chiles
Governor

Southeast District
P.O. Box 15425
West Palm Beach, Florida 33416

Virginia B. Wetherell
Secretary

ENFORCEMENT TRACKING	
FINAL_____	
Initial	Date
	6/26/98
	6/26/98
	6/26/98
chgs made	6/26/98
	6/29/98

Mr. James S. Jenkins, III
Rinker Materials Corporation
P.O. Box 24635
West Palm Beach, FL 33416

Dear Mr. Jenkins,

The attached Soil Thermal Treatment Facility Inspection Report documents a routine inspection of your facility at 1200 NW 137th Avenue, Miami, FL, by the Department on June 10, 1998. During this inspection, as noted on the attached inspection report, a review of the quarterly groundwater monitoring results indicated elevated detection limits continue to be reported by your laboratory for some of the volatile organic parameters, such as Benzene. Please ensure detection limits reported in the future during laboratory analyses are comparable with groundwater standards and criteria. Thank you for your continued cooperation.

If you have any questions or need further information, please contact ~~Lee~~ Martin at 561-681-6676.

Sincerely,

Paul Alan Wierzbicki, P.G.
Waste Cleanup Supervisor

PAW/wlm

atch: STTF Inspection dated 6/10/98

cc: Paul Lasa, DERM, Miami
Tom Conrardy, DEP/BWC, Tallahassee
Jeff Smith, DEP/WPB
Dave Marple, Rinker Materials, Miami
West Palm Beach File

Rinker Materials
June 98 Inspection

VOA	TRPH	4/98 data	VOA		TRPH	
1	215					
12770	20200		Mean	1030.647	Mean	9842.235
1	5600		Standard Error	510.499	Standard Error	4214.306
1	1560		Median	1	Median	1900
1	97		Mode	1	Mode	125
836	41922		Standard Deviation	3645.692	Standard Deviation	30096.16
13736	1590		Sample Variance	13291070	Sample Variance	9.06E+08
1	27300		Kurtosis	15.31797	Kurtosis	41.86378
1	1900		Skewness	3.973661	Skewness	6.238625
1	3200		Range	18806	Range	210996
1	125		Minimum	1	Minimum	4
1	1144		Maximum	18807	Maximum	211000
1	380		Sum	52563	Sum	501954
1	172		Count	51	Count	51
1	11150		Confidence Level(95.	1000.558	Confidence Level(95.	8259.875
1	13000					
1	200					
1	6760					
4	4060					
1	35					
1	2850					
297	200					
134	94					
1	13400					
1	5460					
1	33400					
1	4100					
1	1750					
18807	195					
1	125					
1	637					
1	140					
1	561					
1	20000					
1	610					
1	8600					
1	14900					
1	211000					
84	6070					
1	106					
994	5000					
23	4690					
1	2618					
1182	4					
1	6700					
1	20					
1	1509					
528	23					
1	82					
1	14000					
3130	2500					

Florida Department of Environmental Regulation

Twin Towers Office Bldg. 2600 Blair Stone Road Tallahasse, Florida 32399-2400

Month April Year: 1998

Soil Thermal Treatment Facility
Untreated Soil Reporting Form

DER Form #	17-775.900(2)
	Soil Thermal Treatment Facility
Form Title	Untreated Soil Reporting Form
Effective Date:	
DER Application No.:	

Name of Facility: RINKER MATERIALS CORP.

Air Permit No.: A013-172154

Soil Treatment Permit No.: SW-01117-97

Stationary XXX or Mobile Facility: _____

	1	2	3	4	5								6	7	8	9
				Amount	Analytical Results											
			Sample	Vol. or	Metals								Totals			Indicate Other Analyses
	Date	Reporting ID#	Number	Wt. cy/tn	AS	BA	CD	CR	PB	HG	SE	AG	VOA	RPH	VOH	Attach Lab Results Only
	4/1/98	3002944 - 199800002	7.	1065.82	2.2	22.75	0.34	5.08	47.25	BDL.	BDL.	BDL.	BDL.	215.	BDL.	
	4/1/98	3025273 - 199800001	1.	169.02	BDL.	6.60	BDL.	6.50	28.0	BDL.	BDL.	BDL.	12770.	20200.	BDL.	
*	4/2/98	3002937 - 199800036	1.	87.69	5.8	10.15	1.8	18.0	1150.	BDL.	BDL.	BDL.	BDL.	5600.	BDL.	
*	4/2/98	3002937 - 199800043	1.	7.47	5.35	73.5	BDL.	54.	1500.	BDL.	BDL.	BDL.	BDL.	1560.	BDL.	
*	4/2/98	3002937 - 199800045	1.	54.26	0.6	5.8	.37	9.1	138.	BDL.	BDL.	0.6	BDL.	97.	BDL.	
	4/3/98	3003052 - 199800001	1.	24.36	2.0	23.5	4.32	12.9	33.5	BDL.	BDL.	BDL.	836.	41922.	BDL.	
	4/3/98	3026910 - 199800003	3.	597.54	BDL.	8.8	BDL.	1.84	1.02	BDL.	BDL.	0.03	13736.	1590.	BDL.	
	4/3/98	3027851 - 199800001	1.	.11	1.6	15.5	3.76	6.1	32.6	BDL.	BDL.	BDL.	BDL.	27300.	BDL.	
*	4/7/98	3002937 - 199800040	3.	443.11	3.9	11.	6.2	19.	760.	<0.4	<1.9	<4.4	BDL.	1900.	BDL.	
*	[illegible]/98	3002937 - 199800041	1.	28.10	4.1	11.5	1.0	6.95	160.	BDL.	BDL.	BDL.	BDL.	3200.	BDL.	
*	4/7/98	3002937 - 199800042	1.	37.11	0.7	3.0	0.31	6.9	116.	BDL.	BDL.	0.4	BDL.	125.	BDL.	
*	4/7/98	3002937 - 199800051	5.	25.60	1.4	4.6	0.07	3.6	391.	BDL.	BDL.	0.1	BDL.	1144.	BDL.	
* *	4/8/98	3002937 - 199800056	1.	39.04	17.	16.	1.5	11.	230.	BDL.	BDL.	BDL.	BDL.	380.	BDL.	
	4/9/98	3002855 - 199800006	1.	110.58	5.80	8.39	0.05	5.39	5.23	<0.001	0.35	<0.1	BDL.	172.	BDL.	
*	4/9/98	3002937 - 199800037	1.	135.81	BDL.	20.2	5.75	17.25	230.5	BDL.	BDL.	BDL.	BDL.	11150.	BDL.	
* *	4/9/98	3002937 - 199800038	1.	55.68	BDL.	11.95	4.0	35.	895.	BDL.	BDL.	BDL.	BDL.	13000.	0.01	
*	4/9/98	3002937 - 199800039	1.	70.77	21.5	17.	0.64	4.42	70.	BDL.	BDL.	BDL.	BDL.	200.	BDL.	
	4/9/98	3012169 - 199800002	1.	21.29	4.90	8.80	BDL.	7.30	18.0	BDL.	BDL.	BDL.	BDL.	6760.	BDL.	
	4/9/98	3026883 - 199800005	1.	87.90	BDL.	38.3	BDL.	13.	67.	BDL.	BDL.	1.60	4.27	4060.	BDL.	
	4/9/98	3026890 - 199800002	1.	2.99	BDL.	4.10	BDL.	3.60	BDL.	BDL.	BDL.	BDL.	BDL.	35.0	BDL.	
* *	4/10/98	3002937 - 199800044	1.	44.74	9.5	4.0	2.45	16.5	430.	BDL.	BDL.	BDL.	BDL.	2850.	BDL.	
	4/10/98	3026901 - 199800001	6.	463.79	0.48	53.43	BDL.	9.18	65.60	BDL.	0.75	BDL.	297.50	200.50	BDL.	
	4/13/98	3002855 - 199800007	1.	163.97	0.592	4.924	0.044	11.745	1.746	<0.001	0.3306	5.142	133.8	94.3	.027	
					2.5	73.5	6.2	54	1500	.4	1.9	5.1				

Florida Department of Environmental Regulation

Twin Towers Office Bldg. 2600 Blair Stone Road Tallahasse, Florida 32399-2400

Month April Year: 1998

Soil Thermal Treatment Facility
Untreated Soil Reporting Form

DER Form #	17-775.900(2)
	Soil Thermal Treatment Facility
Form Title	Untreated Soil Reporting Form
Effective Date:	
DER Application No.:	

Name of Facility: RINKER MATERIALS CORP.

Air Permit No.: A013-172154

Soil Treatment Permit No.: SW-01117-97

Stationary XXX or Mobile Facility: _____

1	2	3	4	5								6	7	8	9
			Amount	Analytical Results											
		Sample	Vol. or	Metals								Totals			Indicate Other Analyses
Date	Reporting ID#	Number	Wt. cy/tn	AS	BA	CD	CR	PB	HG	SE	AG	VOA	RPH	VOH	Attach Lab Results Only
4/13/98	3002894 - 199800023	1.	.26	BDL.	1.65	BDL.	1.65	BDL.	BDL.	5.70	BDL.	BDL.	13400.	BDL.	
* 4/13/98	3002894 - 199800025	1.	.52	BDL.	1.60	6.65	BDL.	324.	BDL.	BDL.	BDL.	BDL.	5460.	BDL.	
4/13/98	3002894 - 199800026	1.	.26	BDL.	19.5	2.03	5.73	84.7	BDL.	BDL.	BDL.	BDL.	33400.	BDL.	
4/14/98	3026931 - 199800001	1.	14.64	2.9	19.5	0.09	9.8	1.8	BDL.	BDL.	BDL.	BDL.	4100.	BDL.	
* 4/15/98	3002937 - 199800048	1.	35.72	2.1	5.7	1.0	10.95	590.	BDL.	BDL.	BDL.	BDL.	1750.	BDL.	
4/15/98	3002994 - 199800003	1.	.88	<1.2	32.5	<0.50	2.3	<12.	<0.21	<12.	<1.2	18807.	195.	BDL.	
4/15/98	3003039 - 199800003	1.	5.52	0.94	9.80	BDL.	7.10	17.	BDL.	BDL.	BDL.	BDL.	125.	BDL.	
* * 4/16/98	3002937 - 199800046	1.	41.19	2.8	6.3	1.68	16.5	330.	BDL.	BDL.	BDL.	BDL.	637.	BDL.	
* 4/17/98	3002937 - 199800047	1.	63.55	8.4	6.0	2.52	18.	440.	BDL.	BDL.	BDL.	BDL.	140.	BDL.	
[illegible]98	3002937 - 199800049	1.	127.78	6.6	9.0	0.05	2.3	19.5	BDL.	4.4	BDL.	BDL.	561.	BDL.	
4/20/98	3026959 - 199800002	1.	14.58	5.9	<6.6	0.61	3.7	5.6	<3.2	<1.4	<6.0	BDL.	20000.	BDL.	
4/21/98	3002855 - 199800008	3.	302.38	6.3	1.	BDL.	1.	3.	BDL.	BDL.	BDL.	BDL.	610.59	BDL.	
* 4/21/98	3002937 - 199800050	1.	29.20	BDL.	17.0	BDL.	6.2	160.	BDL.	BDL.	BDL.	BDL.	8600.	BDL.	
4/22/98	3026879 - 199800003	3.	139.37	1.83	74.73	0.35	12.43	15.50	BDL.	BDL.	BDL.	BDL.	14900.	BDL.	
* 4/23/98	3002894 - 199800024	1.	1.46	BDL.	BDL.	2.0	96.6	BDL.	BDL.	BDL.	BDL.	BDL.	211000.	BDL.	
4/23/98	3002928 - 199800003	1.	46.64	2.53	15.5	BDL.	5.86	33.1	BDL.	BDL.	BDL.	84.	6070.	BDL.	
4/23/98	3015487 - 199800001	5.	960.41	BDL.	1.13	BDL.	0.60	1.60	BDL.	BDL.	BDL.	BDL.	106.33	BDL.	
4/23/98	3028292 - 199800001	1.	55.15	BDL.	1.38	BDL.	3.98	1.50	.39	BDL.	.79	994.	5000.	BDL.	
* 4/24/98	1360COD - 199800001	1.	1.5	3.54	36.	2.02	53.2	55.3	BDL.	2.20	10.1	0.023	4690.	BDL.	
4/24/98	3002894 - 199800027	1.	7.85	4.1	394.	.53	19.	46.5	BDL.	BDL.	BDL.	BDL.	2618.	BDL.	
4/24/98	3017655 - 199800002	1.	2.25	BDL.	4.09	BDL.	1.05	4.94	BDL.	BDL.	BDL.	1182.	4.7	BDL.	
* 4/28/98	3002937 - 199800054	1.	30.77	6.4	62.	0.46	13.	390.	BDL.	BDL.	BDL.	BDL.	6700.	BDL.	
* 4/28/98	3002937 - 199800055	1.	21.22	20.	8.4	4.4	6.4	96.	BDL.	BDL.	BDL.	BDL.	20.	BDL.	
				20	394	6.6	96.6	590	3.2	5.1	10.1				

Florida Department of Environmental Regulation

Twin Towers Office Bldg. 2600 Blair Stone Road Tallahasse, Florida 32399-2400

Month April Year: 1998

Soil Thermal Treatment Facility
Untreated Soil Reporting Form

DER Form #	17-775.900(2)
	Soil Thermal Treatment Facility
Form Title	Untreated Soil Reporting Form
Effective Date:	
DER Application No.:	

Name of Facility: RINKER MATERIALS CORP.

Air Permit No.: A013-172154

Soil Treatment Permit No.: SW-01117-97

Stationary XXX or Mobile Facility: _____

1	2	3	4	5								6	7	8	9
			Amount	Analytical Results											
		Sample	Vol. or	Metals								Totals			Indicate Other Analyses
Date	Reporting ID#	Number	Wt. cy/tn	AS	BA	CD	CR	PB	HG	SE	AG	VOA	RPH	VOH	Attach Lab Results Only
4/29/98	3002894 - 199800028	1.	16.69	0.6	19.	0.80	8.7	6.7	BDL.	BDL.	0.8	BDL.	1509.	BDL.	
4/29/98	3003039 - 199800004	1.	7.65	.035	3.38	<0.01	.375	3.307	<0.001	.252	1.466	528.	23.8	BDL.	
* 4/30/98	3002937 - 199800052	1.	18.71	2.5	1.9	BDL.	4.1	210.	BDL.	BDL.	BDL.	BDL.	82.	BDL.	
* 4/30/98	3002937 - 199800053	1.	36.03	8.1	21.	3.1	8.5	300.	BDL.	BDL.	BDL.	BDL.	14000.	BDL.	
4/30/98	3006975 - 199800001	.	138.	BDL.	BDL.	BDL.	0.5	0.4	BDL.	BDL.	BDL.	3130.	2500.	BDL.	
				8.1	21	3.1	8.7	300	.001	.25	1.4				

* SEE ATTACHMENT "A"

* SEE ATTACHMENT "B"

Florida Department of Environmental Regulation
Soil Thermal Treatment Facility
Untreated Soil Reporting Form

Name of Facility: RINKER MATERIALS CORP
Air Permit No: A013-172154
Soil Treatment Permit No: SW-01117-91
Stationary:XXX or Mobile Facility:

ATTACHMENT "A"
Metals Blending Report

Month April **Year** 1998

1	2	3	4	5								6	7	8
Day of Month	Soil Batch ID#	Sample Number	Amount Volume or Weight cy/tn	Analytical Results										
				Metals								Totals		Source
				AS	BA	CD	CR	PB	HG	SE	AG	VOA	RPH	
2-Apr														
3002937-	199800036													
untreated	analysis													
blending	soil			5.8	10.15	1.8	18	1150	BDL	BDL	BDL	.....	.....	FPL AIRPORT
blending	soil			.....	.....	.....	.....	BDL	.....	.....	.....			Blended 11 - 1
				.....	.....	.....	.....	41.2	.....	.....	.....			
2-Apr														
3002937-	199800043													
untreated	analysis													
blending	soil			5.35	73.5	BDL	34	1500	BDL	BDL	BDL	.....	.....	FPL SWEETWATER
blending	soil			.....	.....	.....	.....	BDL	.....	.....	.....			Blended 14 - 1
				.....	.....	.....	.....	34.6	.....	.....	.....			
2-Apr														
3002937-	199800045													
untreated	analysis													
blending	soil			0.6	5.8	0.37	9.1	138	BDL	BDL	0.6	.....	.....	FPL LEJEUNE
blending	soil			.....	.....	.....	.....	BDL	.....	.....	.....			Blended 1 - 1
				.....	.....	.....	.....	34.1	.....	.....	.....			
7-Apr														
3002937-	199800040													
untreated	analysis													
blending	soil			3.9	11	6.2	19	760	<0.4	<1.9	<4.4	.....	.....	FPL GALLOWAY
blending	soil			.....	.....	.....	.....	BDL	.....	.....	.....			Blended 7 - 1
				.....	.....	.....	.....	34.6	.....	.....	.....			

Form: ATTACH_A

Florida Department of E. .onmental Reg..ation
Soil Thermal Treatment Facility
Untreated Soil Reporting Form

Name of Facility: RINKER MATERIALS CORP
Air Permit No: A013-172154
Soil Treatment Permit No: SW-01117-91
Stationary:XXX or Mobile Facility:

ATTACHMENT "A"
Metals Blending Report

Month April **Year** 1998

1	2	3	4	5								6	7	8
Day of Month	Soil Batch ID#	Sample Number	Amount Volume or Weight cy/tn	Analytical Results										
				Metals								Totals		Source
				AS	BA	CD	CR	PB	HG	SE	AG	VOA	RPH	
7-Apr														
3002937-	199800041													
untreated	analysis			4.1	11.5	1	6.95	160	BDL	BDL	BDL	.....	.....	FPL FRONTON
blending	soil			.....	.....	.....	.....	BDL	.....	.....	.....			Blended 1 - 1
blending	soil			.....	.....	.....	.....	39.3	.....	.....	.....			
7-Apr														
3002937-	199800042													
untreated	analysis			0.7	3	0.31	6.9	116	BDL	BDL	0.4	.....	.....	FPL FASHION
blending	soil			.....	.....	.....	.....	BDL	.....	.....	.....			Blended 1 - 1
blending	soil			.....	.....	.....	.....	39.3	.....	.....	.....			
7-Apr														
3002937-	199800051													
unt[illegible]d	analysis			1.4	4.6	0.07	3.6	391	BDL	BDL	0.1	.....	.....	FPL FT LAUDERDL
blending	soil			.....	.....	.....	.....	BDL	.....	.....	.....			Blended 4 - 1
blending	soil			.....	.....	.....	.....	39.3	.....	.....	.....			
8-Apr														
3002937-	199800056													
untreated	analysis			17	16	1.5	11	230	BDL	BDL	BDL	.....	.....	FPL MIRAMAR
blending	soil			BDL	.....	.....	.....	BDL	.....	.....	.....			Blended 2 - 1
blending	soil			1.5	.....	.....	.....	39.3	.....	.....	.....			

Form: ATTACH_A

Florida Department of E.. .onmental Regulation
Soil Thermal Treatment Facility
Untreated Soil Reporting Form

Name of Facility: RINKER MATERIALS CORP
Air Permit No: A013-172154
Soil Treatment Permit No: SW-01117-91
Stationary:XXX or Mobile Facility:

ATTACHMENT "A"
Metals Blending Report

Month April **Year** 1998

1	2	3	4	5								6	7	8
Day of Month	Soil Batch ID#	Sample Number	Amount Volume or Weight cy/tn	Analytical Results										Source
				Metals								Totals		
				AS	BA	CD	CR	PB	HG	SE	AG	VOA	RPH	
9-Apr														
3002937-	199800037													
untreated	analysis			BDL	20.2	5.75	17.25	230.5	BDL	BDL	BDL	.....	.....	FPL FLAGAMI
blending	soil			.....	.....	.....	.....	BDL	.....	.....	.....			Blended 2 - 1
blending	soil			.....	.....	.....	.....	25.6	.....	.....	.....			
9-Apr														
3002937-	199800038													
untreated	analysis			BDL	11.95	4	35	895	BDL	BDL	BDL			FPL MARKET SUB
blending	soil			.....	.....	.....	.....	BDL	.....	.....	.....			Blended 8 - 1
blending	soil			.....	.....	.....	.....	39.3	.....	.....	.....			
9-Apr														
3002937-	199800039													
untreated	analysis			21.5	17	0.64	4.42	70	BDL	BDL	BDL			FPL CLEWISTON
blending	soil			BDL	.....	.....	.....	.....	.....	.....	.....			Blended 2 - 1
blending	soil			0.5	.....	.....	.....	.....	.....	.....	.....			
10-Apr														
3002937-	199800044													
untreated	analysis			9.5	4	2.45	16.5	430	BDL	BDL	BDL			FPL BUENA VISTA
blending	soil			.....	.....	.....	.....	BDL	.....	.....	.....			Blended 4 - 1
blending	soil			.....	.....	.....	.....	31.7	.....	.....	.....			

Form: ATTACH_A

Florida Department of E onmental Re tion
Soil Thermal Treatment Facility
Untreated Soil Reporting Form

Name of Facility: RINKER MATERIALS CORP
Air Permit No: A013-172154
Soil Treatment Permit No: SW-01117-91
Stationary:XXX or Mobile Facility:

ATTACHMENT "A"
Metals Blending Report

Month April **Year** 1998

1	2	3	4	5								6	7	8
Day of Month	Soil Batch ID#	Sample Number	Amount Volume or Weight cy/tn	Analytical Results										
				Metals								Totals		Source
				AS	BA	CD	CR	PB	HG	SE	AG	VOA	RPH	
13-Apr														
3002894-	199800025													
untreated	analysis			BDL	1.6	6.65	BDL	324	BDL	BDL	BDL	.....	.....	FPL FT LAUD A/P
blending	soil			.....	.....	.....	.....	BDL	.....	.....	.....			Blended 3 - 1
blending	soil			.....	.....	.....	.....	39.3	.....	.....	.....			
15-Apr														
3002937-	199800048													
untreated	analysis			2.1	5.7	1	10.95	590	BDL	BDL	BDL	.....	.....	FPL ROSELAWN
blending	soil			.....	.....	.....	.....	BDL	.....	.....	.....			Blended 6 - 1
blending	soil			.....	.....	.....	.....	106	.....	.....	.....			
16-Apr														
302937-	199800046													
unt[illegible]d	analysis			2.8	6.3	1.68	16.5	330	BDL	BDL	BDL	.....	.....	FPL SUNILAND
blending	soil			.....	.....	.....	.....	BDL	.....	.....	.....			Blended 3 - 1
blending	soil			.....	.....	.....	.....	39.3	.....	.....	.....			
4/17/98														
3002937-	199800047													
untreated	analysis			8.4	6	2.52	18	440	BDL	BDL	BDL	.....	.....	FPL OLYMPIA
blending	soil			.....	.....	.....	.....	BDL	.....	.....	.....			Blended 4 - 1
blending	soil			.....	.....	.....	.....	67.3	.....	.....	.....			

Form: ATTACH_A

Florida Department of E onmental Re tion
Soil Thermal Treatment Facility
Untreated Soil Reporting Form

Name of Facility: RINKER MATERIALS CORP
Air Permit No: A013-172154
Soil Treatment Permit No: SW-01117-91
Stationary:XXX or Mobile Facility:

ATTACHMENT "A"
Metals Blending Report

Month April **Year** 1998

1	2	3	4	5								6	7	8
Day of Month	Soil Batch ID#	Sample Number	Amount Volume or Weight cy/tn	Analytical Results										
				Metals								Totals		Source
				AS	BA	CD	CR	PB	HG	SE	AG	VOA	RPH	
4/21/98														
3002937-	199800050													
untreated	analysis			BDL	17	BDL	6.2	160	BDL	BDL	BDL	.....	.....	FPL SIMPSON
blending	soil			.....	.....	.....	.....	BDL	.....	.....	.....			Blended 1 - 1
blending	soil			.....	.....	.....	.....	39.3	.....	.....	.....			
4/23/98														
3002894-	199800024													
untreated	analysis			BDL	BDL	2	96.6	BDL	BDL	BDL	BDL	.....	.....	SOUTH SIDE N ORA
blending	soil			.....	.....	.....	BDL	.....	.....	.....	.....			Blended 1 - 1
blending	soil			.....	.....	.....	13.7	.....	.....	.....	.....			
4/24/98														
1360COD														
unt[illegible]d	analysis			3.54	36	2.02	53.2	55.3	BDL	2.2	10.1	.....	.....	WM KROME
blending	soil			.....	.....	.....	BDL	.....	.....	.....	.....			Blended 1 - 1
blending	soil			.....	.....	.....	8.2	.....	.....	.....	.....			
4/28/98														
3002937-	199800054													
untreated	analysis			6.4	62	0.46	13	390	BDL	BDL	BDL	.....	.....	FPL NATOMA
blending	soil			.....	.....	.....	.....	BDL	.....	.....	.....			Blended 4 - 1
blending	soil			.....	.....	.....	.....	91.6	.....	.....	.....			

Form: ATTACH_A

Florida Department of E. onmental Re..ation
Soil Thermal Treatment Facility
Untreated Soil Reporting Form

Name of Facility: RINKER MATERIALS CORP
Air Permit No: A013-172154
Soil Treatment Permit No: SW-01117-91
Stationary:XXX or Mobile Facility:

ATTACHMENT "A"
Metals Blending Report

Month April **Year** 1998

1	2	3	4	5								6	7	8
Day of Month	Soil Batch ID#	Sample Number	Amount Volume or Weight cy/tn	Analytical Results										
				Metals								Totals		Source
				AS	BA	CD	CR	PB	HG	SE	AG	VOA	RPH	
28-Apr														
3002937-	199800055													
untreated	analysis			20	8.4	4.4	6.4	96	BDL	BDL	BDL	.....	.....	FPL HOMESTEAD
blending	soil			BDL	.....	.....	.....	.....	.....	.....	.....			Blended 2 - 1
blending	soil			1	.....	.....	.....	.....	.....	.....	.....			
30-Apr														
3002937-	199800052													
untreated	analysis			2.5	1.9	BDL	4.1	210	BDL	BDL	BDL	.....	.....	FPL MASTER SUB
blending	soil			.....	.....	.....	.....	BDL	.....	.....	.....			Blended 2 - 1
blending	soil			.....	.....	.....	.....	39.3	.....	.....	.....			
30-Apr														
3002937-	199800053													
unt[illegible]d	analysis			8.1	21	3.1	8.5	300	BDL	BDL	BDL	.....	.....	FPL LITTLE RIVER
blending	soil			.....	.....	.....	.....	BDL	.....	.....	.....			Blended 3 - 1
blending	soil			.....	.....	.....	.....	45.9	.....	.....	.....			
untreated	analysis													
blending	soil													
blending	soil													

Form: ATTACH_A

RINKER Environmental Services, INC.

COMPQAP #950491
HRS #E86536

Material Analysis Report

REPORT DATE 5/15/98
SAMPLE DATE 4/1/98
SAMPLE SOURCE FPL FRONTON
REFERENCE # 3002937-98041
R.E.S. NUMBER 9619/9620
SAMPLE TYPE SOIL

PARAMETER	RESULTS CONT.	RESULT CLEAN	RESULT BLEND	UNITS	METHOD	LIMITS DET.	LIMITS REG.	ANALYSIS DATE	ANALYST INITIAL
LEAD	524	BDL	39.3	mg/kg	7420	1	100	5/14/98	JSP

BLEND = 1 Contaminated With 2 CLEAN

BDL = Below detection limit

Juan Gonzalez
QA/QC Manager

RINKER Environmental Services, INC.

COMPQAP #950491
HRS #E86536

Material Analysis Report

REPORT DATE 5/15/98
SAMPLE DATE 4/2/98
SAMPLE SOURCE FPL AIRPORT
REFERENCE # 3002937-98036
R.E.S. NUMBER 9621/9622
SAMPLE TYPE SOIL

PARAMETER	RESULTS CONT.	RESULT CLEAN	RESULT BLEND	UNITS	METHOD	LIMITS DET.	LIMITS REG.	ANALYSIS DATE	ANALYST INITIAL
LEAD	48.2	BDL	41.2	mg/kg	7420	1	100	5/14/98	JSP

BLEND = 1 Contaminated With 10 CLEAN

BDL = Below detection limit

Juan Gonzalez
QA/QC Manager

RINKER Environmental Services, INC.

COMPQAP #950491
HRS #E86536

Material Analysis Report

REPORT DATE 5/15/98
SAMPLE DATE 4/2/98
SAMPLE SOURCE FPL SWEETWATER
REFERENCE # 3002937-98043
R.E.S. NUMBER 9623/9624
SAMPLE TYPE SOIL

PARAMETER	RESULTS CONT.	RESULT CLEAN	RESULT BLEND	UNITS	METHOD	LIMITS DET.	LIMITS REG.	ANALYSIS DATE	ANALYST INITIAL
LEAD	181	BDL	34.6	mg/kg	7420	1	100	5/14/98	JSP

BLEND = 1 Contaminated With 14 CLEAN

BDL = Below detection limit

Juan Gonzalez
QA/QC Manager

RINKER Environmental Services, INC.

COMPQAP #950491
HRS #E86536

Material Analysis Report

REPORT DATE 5/15/98
SAMPLE DATE 4/3/98
SAMPLE SOURCE FPL GALLOWAY
REFERENCE # 3002937-98040
R.E.S. NUMBER 9625/9626
SAMPLE TYPE SOIL

PARAMETER	RESULTS CONT.	RESULT CLEAN	RESULT BLEND	UNITS	METHOD	LIMITS DET.	LIMITS REG.	ANALYSIS DATE	ANALYST INITIAL
LEAD	37.6	BDL	34.6	mg/kg	7420	1	100	5/14/98	JSP

BLEND = 1 Contaminated With 7 CLEAN

BDL = Below detection limit

Juan Gonzalez
QA/QC Manager

RINKER Environmental Services, INC.

COMPQAP #950491
HRS #E86536

Material Analysis Report

REPORT DATE 5/15/98
SAMPLE DATE
SAMPLE SOURCE FPL CLEWISTON
REFERENCE # 3002937-98039
R.E.S. NUMBER 9627/9628
SAMPLE TYPE SOIL

PARAMETER	RESULTS CONT.	RESULT CLEAN	RESULT BLEND	UNITS	METHOD	LIMITS DET.	LIMITS REG.	ANALYSIS DATE	ANALYST INITIAL
.RSENIC	0.6	BDL	0.5	mg/kg	7061	1	10	5/14/98	PEP

BLEND = 1 Contaminated With 2 CLEAN

BDL = Below detection limit

Juan Gonzalez
QA/QC Manager

RINKER Environmental Services, INC.

COMPQAP #950491
HRS #E86536

Material Analysis Report

REPORT DATE 5/15/98
SAMPLE DATE 4/10/98
SAMPLE SOURCE FPL BUENA VISTA
REFERENCE # 3002937-98044
R.E.S. NUMBER 9629/9630
SAMPLE TYPE SOIL

PARAMETER	RESULTS CONT.	RESULT CLEAN	RESULT BLEND	UNITS	METHOD	LIMITS DET.	LIMITS REG.	ANALYSIS DATE	ANALYST INITIAL
LEAD	34.0	BDL	31.7	mg/kg	7420	1	100	5/14/98	JSP

BLEND = 1 Contaminated With 4 CLEAN

BDL = Below detection limit

Juan Gonzalez
QA/QC Manager

RINKER Environmental Services, INC.

COMPQAP #950491
HRS #E86536

Material Analysis Report

REPORT DATE 5/15/98
SAMPLE DATE 4/2/98
SAMPLE SOURCE FPL LEJEUNE
REFERENCE # 3002937-98045
R.E.S. NUMBER 9631/9632
SAMPLE TYPE SOIL

PARAMETER	RESULTS CONT.	RESULT CLEAN	RESULT BLEND	UNITS	METHOD	LIMITS DET.	LIMITS REG.	ANALYSIS DATE	ANALYST INITIAL
LEAD	370	BDL	34.1	mg/kg	7420	1	100	5/14/98	JSP

BLEND = 1 Contaminated With 1 CLEAN

BDL = Below detection limit

Juan Gonzalez
QA/QC Manager

RINKER Environmental Services, INC.

COMPQAP #950491
HRS #E86536

Material Analysis Report

REPORT DATE 5/15/98
SAMPLE DATE 4/17/98
SAMPLE SOURCE FPL OLYMPIA
REFERENCE # 3002937-98047
R.E.S. NUMBER 9745/9746
SAMPLE TYPE SOIL

PARAMETER	RESULTS CONT.	RESULT CLEAN	RESULT BLEND	UNITS	METHOD	LIMITS DET.	LIMITS REG.	ANALYSIS DATE	ANALYST INITIAL
LEAD	59.8	BDL	67.3	mg/kg	7420	1	100	5/14/98	JSP

BLEND = 1 Contaminated With 3 CLEAN

BDL = Below detection limit

Juan Gonzalez
QA/QC Manager

RINKER Environmental Services, INC.

COMPQAP #950491
HRS #E86536

Material Analysis Report

REPORT DATE 5/15/98
SAMPLE DATE 4/15/98
SAMPLE SOURCE FPL ROSELAWN
REFERENCE # 3002937-98048
R.E.S. NUMBER 9747/9748
SAMPLE TYPE SOIL

PARAMETER	RESULTS CONT.	RESULT CLEAN	RESULT BLEND	UNITS	METHOD	LIMITS DET.	LIMITS REG.	ANALYSIS DATE	ANALYST INITIAL
LEAD	46.2	BDL	106	mg/kg	7420	1	100	5/14/98	JSP

BLEND = 1 Contaminated With 5 CLEAN

BDL = Below detection limit

Juan Gonzalez
QA/QC Manager

RINKER Environmental Services, INC.

COMPQAP #950491

HRS #E86536

Material Analysis Report

REPORT DATE 5/15/98
SAMPLE DATE
SAMPLE SOURCE FPL HOMESTEAD
REFERENCE # 3002937-98055
R.E.S. NUMBER 9751/9752
SAMPLE TYPE SOIL

PARAMETER	RESULTS CONT.	RESULT CLEAN	RESULT BLEND	UNITS	METHOD	LIMITS DET.	LIMITS REG.	ANALYSIS DATE	ANALYST INITIAL
ARSENIC	<0.5	BDL	1.0	mg/kg	7061	1	10	5/14/98	PEP

BLEND = 1 Contaminated With 2 CLEAN

BDL = Below detection limit

Juan Gonzalez
QA/QC Manager

RINKER Environmental Services, INC.

COMPQAP #950491
HRS #E86536

Material Analysis Report

REPORT DATE 5/15/98
SAMPLE DATE 4/30/98
SAMPLE SOURCE FPL LITTLE RIVER
REFERENCE # 3002937-1998000053
R.E.S. NUMBER 9753/9754
SAMPLE TYPE SOIL

PARAMETER	RESULTS CONT.	RESULT CLEAN	RESULT BLEND	UNITS	METHOD	LIMITS DET.	LIMITS REG.	ANALYSIS DATE	ANALYST INITIAL
LEAD	52.1	BDL	45.9	mg/kg	7420	1	100	5/14/98	JSP

BLEND = 1 Contaminated With 3 CLEAN

BDL = Below detection limit

Juan Gonzalez
QA/QC Manager

RINKER Environmental Services, INC.

COMPQAP #950491
HRS #E86536

Material Analysis Report

REPORT DATE 5/15/98
SAMPLE DATE 4/28/98
SAMPLE SOURCE FPL NATOMA
REFERENCE # 3002937-98054
R.E.S. NUMBER 9757/9758
SAMPLE TYPE SOIL

PARAMETER	RESULTS CONT.	RESULT CLEAN	RESULT BLEND	UNITS	METHOD	LIMITS DET.	LIMITS REG.	ANALYSIS DATE	ANALYST INITIAL
LEAD	53.2	BDL	91.6	mg/kg	7420	1	100	5/14/98	JSP

BLEND = 1 Contaminated With 3 CLEAN

BDL = Below detection limit

Juan Gonzalez
QA/QC Manager

RINKER Environmental Services, INC.

COMPQAP #950491
HRS #E86536

Material Analysis Report

REPORT DATE 5/15/98
SAMPLE DATE 4/2/98
SAMPLE SOURCE FPL FLAGAMI
REFERENCE # 3002937-98037
R.E.S. NUMBER 9633/9634
SAMPLE TYPE SOIL

PARAMETER	RESULTS CONT.	RESULT CLEAN	RESULT BLEND	UNITS	METHOD	LIMITS DET.	LIMITS REG.	ANALYSIS DATE	ANALYST INITIAL
LEAD	255	BDL	25.6	mg/kg	7420	1	100	5/14/98	JSP

BLEND = 1 Contaminated With 1 CLEAN

BDL = Below detection limit

Juan Gonzalez
QA/QC Manager

RINKER Environmental Services, INC.

COMPQAP #950491
HRS #E86536

Material Analysis Report

REPORT DATE 5/15/98
SAMPLE DATE 4/23/98
SAMPLE SOURCE SOUTHSIDE DODGE
REFERENCE # 3002894-98024
R.E.S. NUMBER 9737/9738
SAMPLE TYPE SOIL

PARAMETER	RESULTS CONT.	RESULT CLEAN	RESULT BLEND	UNITS	METHOD	LIMITS DET.	LIMITS REG.	ANALYSIS DATE	ANALYST INITIAL
CHROMIUM	3.7	BDL	13.7	mg/kg	7190	1	50	5/14/98	JSP

BLEND = 1 Contaminated With 2 CLEAN

BDL = Below detection limit

Juan Gonzalez
QA/QC Manager

RINKER Environmental Services, INC.

COMPQAP #950491
HRS #E86536

Material Analysis Report

REPORT DATE 5/15/98
SAMPLE DATE 4/2/98
SAMPLE SOURCE FPL Market Sub
REFERENCE # 3002937-980
R.E.S. NUMBER 9621/9622
SAMPLE TYPE SOIL

PARAMETER	RESULTS CONT.	RESULT CLEAN	RESULT BLEND	UNITS	METHOD	LIMITS DET.	LIMITS REG.	ANALYSIS DATE	ANALYST INITIAL
LEAD	48.2	BDL	39.3	mg/kg	7420	1	100	5/14/98	JSP

BLEND = 1 Contaminated With 10 CLEAN

BDL = Below detection limit

Juan Gonzalez
QA/QC Manager

RINKER Environmental Services, INC.

COMPQAP #950491
HRS #E86536

Material Analysis Report

REPORT DATE 5/15/98
SAMPLE DATE
SAMPLE SOURCE FPL FASHION
REFERENCE # 3002937-98042
R.E.S. NUMBER 9635/9636
SAMPLE TYPE SOIL

PARAMETER	RESULTS CONT.	RESULT CLEAN	RESULT BLEND	UNITS	METHOD	LIMITS DET.	LIMITS REG.	ANALYSIS DATE	ANALYST INITIAL
LEAD	210	BDL	39.3	mg/kg	7420	1	100	5/14/98	JSP

BLEND = 1 Contaminated With 1 CLEAN

BDL = Below detection limit

Juan Gonzalez
QA/QC Manager

RINKER Environmental Services, INC.

COMPQAP #950491

HRS #E86536

Material Analysis Report

REPORT DATE 5/15/98
SAMPLE DATE
SAMPLE SOURCE FPL FT. LAUDERDALE
REFERENCE # 3002937-98051
R.E.S. NUMBER 9741/9742
SAMPLE TYPE SOIL

PARAMETER	RESULTS CONT.	RESULT CLEAN	RESULT BLEND	UNITS	METHOD	LIMITS DET.	LIMITS REG.	ANALYSIS DATE	ANALYST INITIAL
LEAD	51.8	BDL	39.3	mg/kg	7420	1	100	5/14/98	JSP

BLEND = 1 Contaminated With 3 CLEAN

BDL = Below detection limit

Juan Gonzalez
QA/QC Manager

RINKER Environmental Services, INC.

COMPQAP #950491
HRS #E86536

Material Analysis Report

REPORT DATE 5/15/98
SAMPLE DATE 4/8/98
SAMPLE SOURCE FPL MIRAMAR
REFERENCE # 3002937-98056
R.E.S. NUMBER 9739/9740
SAMPLE TYPE SOIL

PARAMETER	RESULTS CONT.	RESULT CLEAN	RESULT BLEND	UNITS	METHOD	LIMITS DET.	LIMITS REG.	ANALYSIS DATE	ANALYST INITIAL
ARSENIC	0.8	BDL	1.5	mg/kg	7061	1	10	5/14/98	PEP
LEAD	54	BDL	39.3	mg/kg	7420	1	100	5/14/98	JSP

BLEND = 1 Contaminated With 1 CLEAN (Arsenic)
BLEND = 1 Contaminated With 2 CLEAN (Lead)
BDL = Below detection limit

Juan Gonzalez
QA/QC Manager

RINKER Environmental Services, INC.

COMPQAP #950491
HRS #E86536

Material Analysis Report

REPORT DATE 5/15/98
SAMPLE DATE 4/13/98
SAMPLE SOURCE FPL FT. LAUDERDALE A/P
REFERENCE # 3002894-98025
R.E.S. NUMBER 9743/9744
SAMPLE TYPE SOIL

PARAMETER	RESULTS CONT.	RESULT CLEAN	RESULT BLEND	UNITS	METHOD	LIMITS DET.	LIMITS REG.	ANALYSIS DATE	ANALYST INITIAL
LEAD	48.2	BDL	39.3	mg/kg	7420	1	100	5/14/98	JSP

BLEND = 1 Contaminated With 3 CLEAN

BDL = Below detection limit

Juan Gonzalez
QA/QC Manager

RINKER Environmental Services, INC.

COMPQAP #950491

HRS #E86536

Material Analysis Report

REPORT DATE 5/15/98
SAMPLE DATE 4/16/98
SAMPLE SOURCE FPL SUNILAND
REFERENCE # 3002937-98046
R.E.S. NUMBER 9749/9750
SAMPLE TYPE SOIL

PARAMETER	RESULTS CONT.	RESULT CLEAN	RESULT BLEND	UNITS	METHOD	LIMITS DET.	LIMITS REG.	ANALYSIS DATE	ANALYST INITIAL
LEAD	46.7	BDL	39.3	mg/kg	7420	1	100	5/14/98	JSP

BLEND = 1 Contaminated With 3 CLEAN

BDL = Below detection limit

Juan Gonzalez
QA/QC Manager

RINKER Environmental Services, INC.

COMPQAP #950491
HRS #E86536

Material Analysis Report

REPORT DATE 5/15/98
SAMPLE DATE 4/21/98
SAMPLE SOURCE FPL SIMPSON
REFERENCE # 3002937-98050
R.E.S. NUMBER 9735/9736
SAMPLE TYPE SOIL

PARAMETER	RESULTS CONT.	RESULT CLEAN	RESULT BLEND	UNITS	METHOD	LIMITS DET.	LIMITS REG.	ANALYSIS DATE	ANALYST INITIAL
LEAD	116	BDL	39.3	mg/kg	7420	1	100	5/14/98	JSP

BLEND = 1 Contaminated With 1 CLEAN

BDL = Below detection limit

Juan Gonzalez
QA/QC Manager

RINKER Environmental Services, INC.

COMPQAP #950491
HRS #E86536

Material Analysis Report

REPORT DATE 5/15/98
SAMPLE DATE 4/30/98
SAMPLE SOURCE FPL MASTER SUB.
REFERENCE # 3002937-98052
R.E.S. NUMBER 9755/9756
SAMPLE TYPE SOIL

PARAMETER	RESULTS CONT.	RESULT CLEAN	RESULT BLEND	UNITS	METHOD	LIMITS DET.	LIMITS REG.	ANALYSIS DATE	ANALYST INITIAL
LEAD	77.0	BDL	39.3	mg/kg	7420	1	100	5/14/98	JSP

BLEND = 1 Contaminated With 2 CLEAN

BDL = Below detection limit

Juan Gonzalez
QA/QC Manager

RINKER Environmental Services, INC.

COMPQAP #950491
HRS #E86536

Material Analysis Report

REPORT DATE 5/18/98
SAMPLE DATE 4/24/98
SAMPLE SOURCE WM KROME
REFERENCE # 1360 C.O.D.
R.E.S. NUMBER 9814/9815
SAMPLE TYPE SOIL

PARAMETER	RESULTS CONT.	RESULT CLEAN	RESULT BLEND	UNITS	METHOD	LIMITS DET.	LIMITS REG.	ANALYSIS DATE	ANALYST INITIAL
CHROMIUM	16.5	BDL	8.2	mg/kg	7190	1	50	5/15/98	JSP

BLEND = 1 Contaminated With 1 CLEAN

BDL = Below detection limit

Juan Gonzalez
QA/QC Manager

Untreated Soil Reporting Form

Facility Rinker Materials Corp.
Air Permit No: A013-172154
Soil Treatment Permit No: SW-01117-91
Stationary xxx

Month APRIL Year 1998

ATTACHMENT "B"

Date	Batch No.	Source	Soil Content	Ton	PCB Oil Concentration	Lb. PCB per Batch	YTD Lbs. PCB
4/08/98	3002937-19800056	FPL MIRAMAR SUB	2 PPM	39.04	10.67 PPM	.1562 LBS	1.8431 LBS
4/09/98	3002937-199800038	FPL MARKET SUB	4.2 PPM	55.68	7.25 PPM	.4677 LBS	2.3108 LBS
4/28/98	3002937-199800044	FPL BUENA VISTA	.3 PPM	44.74	2.75 PPM	.0268 LBS	2.3376 LBS
4/16/98	3002937-	FPL SUNILAND SUB	.022 PPM	41.19	2.00 PPM	.0018 LBS	2.3394 LBS YTD 2.613 LBS
							YTD 2.3394 LBS

SAVANNAH LABORATORIES
& ENVIRONMENTAL SERVICES, INC.
414 SW 12th Avenue • Deerfield Beach, Florida 33442 • (954) 421-7400 • Fax (954) 421-2584

LOG NO: D7-52061A
Received: 26 SEP 97
Reported: 12 OCT 97

Ms. Cynthia Zinni
FPL, Central Lab
P.O. Box 078768
West Palm Beach, FL 33407-0768

Client PO. No.: #B96509-90008
Ref.# 199800043

Project: DWA#223514
Sampled By: Client
Code: 152171013
Page 4

REPORT OF RESULTS

LOG NO	SAMPLE DESCRIPTION , SOLID OR SEMISOLID SAMPLES
52061A-16	491119009 SWEETWATER
52061A-17	491659003 SUNNY ISLE
52061A-18	491743004 SUNNY ISLE
52061A-19	491345009 NORMANDY
52061A-20	491346005 NORMANDY

PARAMETER	52061A-16	52061A-17	52061A-18	52061A-19	52061A-20
Metals in TCLP (1311/3010/6010)					
Chromium (TCLP-6010)	~~0.13~~	---	---	---	---
Lead (TCLP-6010), mg/l	1.3	12	0.95	1.3	0.92
Date Analyzed	10.10.97	10.11.97	10.11.97	10.11.97	10.11.97
Method Number	EPA 6010	EPA 6010	EPA 6010	EPA 6010	EPA 6010

414 SW 12th Avenue • Deerfield Beach, Florida 33442 • (954) 421-7400 • Fax (954) 421-2584

LOG NO: D7-52061A
Received: 26 SEP 97

Ms. Cynthia Zinni
FPL, Central Lab
P.O. Box 078768
West Palm Beach, FL 33407-0768

Client PO. No.: #B96509-90008

Ref # 199800036

Project: DWA#223514
Sampled By: Client
Code: 212971012
Page 7

REPORT OF RESULTS

LOG NO	SAMPLE DESCRIPTION , SOLID OR SEMISOLID SAMPLES	
52061A-29	491992004	AIRPORT
52061A-30	1602001	HIALEAH
52061A-31	1617009	HIALEAH
52061A-32	1256006	GLADEVIEW
52061A-33	1321002	GLADEVIEW

PARAMETER	52061A-29	52061A-30	52061A-31	52061A-32	52061A-33
Metals in TCLP					
Arsenic (TCLP-6010), mg/l		<0.20	<0.20	<0.20	<0.20
Lead (TCLP-6010), mg/l	3.6	3.4	3.3	5.3	13
Date Analyzed	10.09.97	10.09.97	10.09.97	10.09.97	10.09.97
Method Number	EPA 6010	EPA 6010	EPA 6010	EPA 6010	EPA 6010