CITY OF JACKSONVILLE, FLORIDA

TRAIL RIDGE LANDFILL CONSTRUCTION

PHASES 6-14

CLASS I CELL EXPANSION

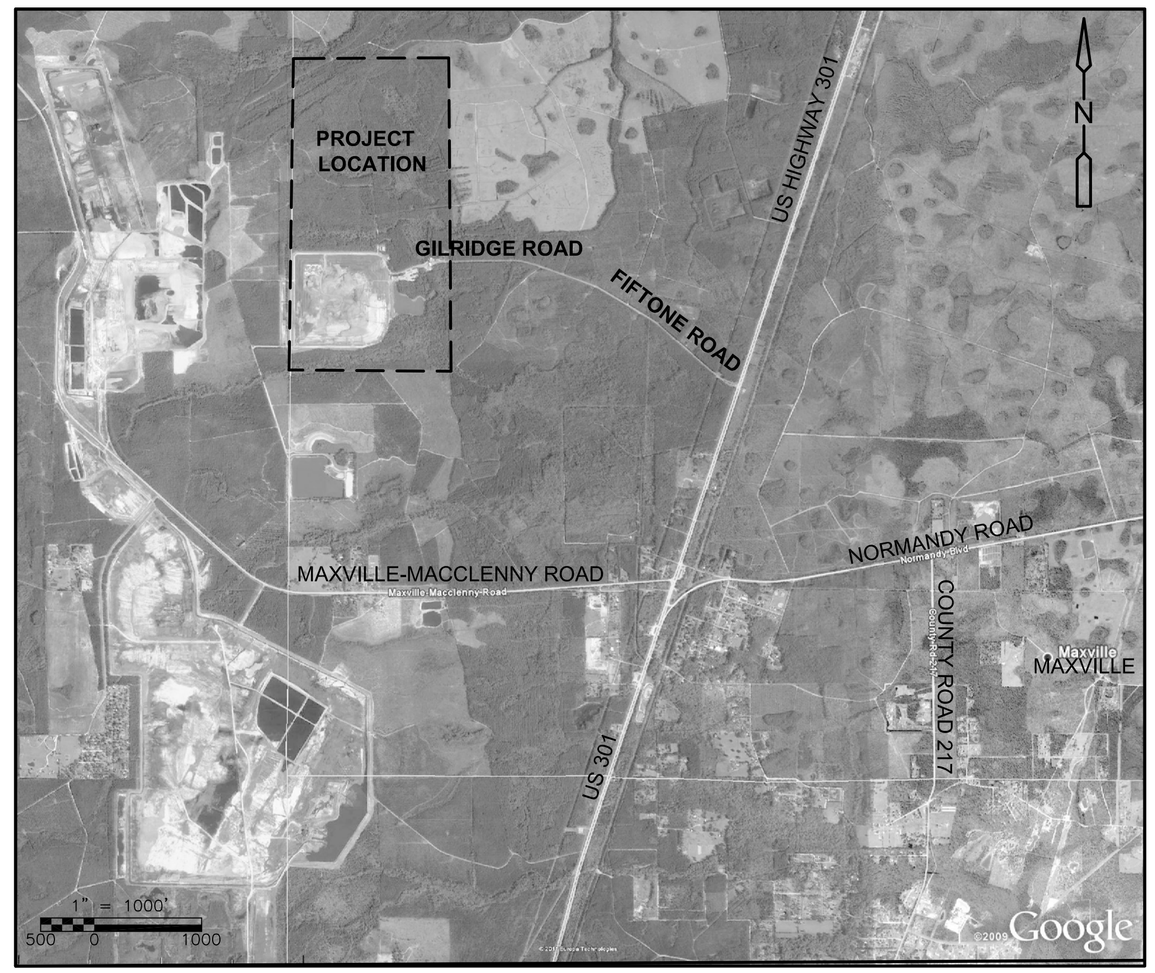

VICINITY MAP

NOTE:
THESE PLANS MAY HAVE BEEN CHANGED IN SIZE BY REPRODUCTION.
THIS MUST BE CONSIDERED WHEN OBTAINING SCALED DATA.

PREPARED BY

CDM Smith
8381 Dix Ellis Trail, Suite 400
Jacksonville, FL 32256
Tel: (904) 731-7109

CITY CONTRACT NO. 6354-13

PROJECT No. 9012-80695

MAYOR

ALVIN BROWN

DIRECTOR OF PUBLIC WORKS

JIM ROBINSON, P.E.

JULY 2013

PREPARED FOR

SOLID WASTE DIVISION
1031 SUPERIOR STREET
JACKSONVILLE, FL 32254

FOR PERMIT - NOT FOR CONSTRUCTION

GENERAL NOTES

1. ALL ELEVATIONS ARE REFERRED TO NATIONAL GEODETIC VERTICAL DATUM OF 1929.
2. LOCATIONS, ELEVATIONS, AND DIMENSIONS OF EXISTING UTILITIES, STRUCTURES, AND OTHER FEATURES ARE SHOWN ACCORDING TO THE BEST INFORMATION AVAILABLE AT THE TIME OF PREPARATION OF THESE PLANS, BUT DO NOT PURPORT TO BE ABSOLUTELY CORRECT. PRIOR TO CONSTRUCTION, THE CONTRACTOR SHALL VERIFY AND AGREE TO BE FULLY RESPONSIBLE FOR ANY AND ALL DAMAGES WHICH MIGHT BE OCCASIONED BY HIS FAILURE TO EXACTLY LOCATE AND PRESERVE ANY AND ALL EXISTING UTILITIES, STRUCTURES, AND OTHER FEATURES AFFECTING HIS WORK.
3. CONTRACTOR SHALL VERIFY ALL UTILITIES AND NOTIFY THE AFFECTED UTILITIES 72 HOURS PRIOR TO DIGGING IN ANY PORTION OF THE SITE.
4. THE CONTRACTOR SHALL REPLACE ANY MONUMENTS, FENCES, ETC. WITH THE SAME TYPE OF MATERIAL THAT WAS REMOVED DURING CONSTRUCTION. COST TO BE INCIDENTAL TO OTHER CONSTRUCTION AND NO EXTRA COMPENSATION SHALL BE ALLOWED.
5. TOPOGRAPHIC SURVEY WAS PERFORMED BY:
   ROBERT M. ANGUS ASSOCIATES
   14775 OLD ST AUGUSTINE ROAD
   JACKSONVILLE FLA. 32258
   904-642-8550
6. THE CONTRACTOR SHALL CONTACT THE ENGINEER'S OFFICE IMMEDIATELY UPON FINDING ANY CONFLICTS DURING CONSTRUCTION ON ANY IMPROVEMENTS SHOWN ON THE DRAWINGS.
7. EROSION CONTROL AND SEDIMENTATION CONTROL DEVICES SHALL BE IN PLACE PRIOR TO BEGINNING ANY DEMOLITION OR CONSTRUCTION. THEY SHALL BE INSTALLED TO THE LIMITS SHOWN IN THE DRAWING, AS REQUIRED IN THE SPECIFICATIONS AND IN ACCORDANCE WITH ALL REGULATORY AGENCY REQUIREMENTS (SEE EROSION CONTROL NOTES).
8. EXISTING DRAINAGE STRUCTURES WITHIN CONSTRUCTION LIMITS SHALL BE PRESERVED UNLESS OTHERWISE NOTED.
9. ALL HORIZONTAL CONTROL REFERS TO NORTHING AND EASTING UNLESS OTHERWISE NOTED ON PLANS.
10. NORTHINGS AND EASTINGS SHOWN ON PLANS ARE FROM CENTERLINE TO CENTERLINE OF STRUCTURE.
11. EXISTING UTILITIES AND FACILITIES SHOWN ON THE DRAWINGS WERE LOCATED FROM THE UTILITY OWNER'S RECORDS OF UNDERGROUND FACILITIES. GUARANTEE IS NOT MADE THAT ALL EXISTING FACILITIES ARE SHOWN NOR THAT THOSE FACILITIES SHOWN ARE ENTIRELY ACCURATE. THE CONTRACTOR SHALL BE RESPONSIBLE FOR THE COORDINATION WITH EXISTING UTILITIES.
12. THE CONTRACTOR SHALL, BY REPAIR OR REPLACEMENT, RETURN TO EQUAL OR BETTER CONDITION ALL PAVEMENT, SIDEWALK, LAWNS, UTILITIES AND OTHER ITEMS DAMAGED BY THIS CONSTRUCTION ACTIVITY.
13. DURING CONSTRUCTION OF THE PROPOSED IMPROVEMENTS, THE CONTRACTOR IS RESPONSIBLE FOR REMOVAL, PROTECTION, AND REPLACEMENT OF ITEMS ON PRIVATE PROPERTY AND PUBLIC RIGHTS OF WAY SUCH AS SPRINKLERS, FENCES, SOD, SHRUBS, TREES, SURVEYING MARKERS, ETC.
14. PRIOR TO EXCAVATING IN THE VICINITY OF A GAS LINE, THE CONTRACTOR SHALL NOTIFY THE GAS UTILITY OWNER IN ACCORDANCE WITH THE REQUIREMENTS OF FLORIDA STATUTES, PROTECTION OF UNDERGROUND PIPELINES F.S. 553.851, CH 17-143.
15. ALL CONSTRUCTION SHALL CONFORM TO CITY OF JACKSONVILLE STANDARDS AND SPECIFICATIONS AND TO THE FLORIDA DEPARTMENT OF TRANSPORTATION STANDARD SPECIFICATIONS FOR ROAD AND BRIDGE CONSTRUCTION, MOST RECENT EDITIONS.
16. THE CONTRACTOR SHALL BE RESPONSIBLE FOR THE LOCATION AND PROTECTION OF ALL UTILITIES THAT MAY EXIST, ABOVE OR BELOW GROUND.
17. ALL BRUSH, STRIPPINGS OR UNSUITABLE MATERIAL SHALL BE PROPERLY AND LEGALLY DISPOSED OF OFF-SITE AT THE CONTRACTOR'S EXPENSE.
18. A DEWATERING PERMIT MAY BE REQUIRED BY THE ST. JOHNS RIVER WATER MANAGEMENT DISTRICT PRIOR TO ANY PUMPING, ETC. AND SHALL BE OBTAINED BY THE CONTRACTOR. CONTRACTOR IS RESPONSIBLE FOR THE DESIGN, INSTALLATION, PERMIT AND OPERATION OF AN ADEQUATE DEWATERING SYSTEM TO DEWATER EXCAVATIONS FOR CONSTRUCTION. DEWATERING PLAN TO BE SUBMITTED TO ENGINEER FOR APPROVAL PRIOR TO ANY DEWATERING OR SUBMITTING APPLICATION FOR CONSUMPTIVE USE PERMIT.
19. MEASURES SHALL BE TAKEN BY THE CONTRACTOR TO ENSURE THAT ADEQUATE EROSION AND SEDIMENT CONTROL ARE MAINTAINED AT ALL TIMES DURING THE PROJECT (FOR EROSION CONTROL NOTES SEE SHEET G-2)
20. ALL PRIVATE AND PUBLIC PROPERTY AFFECTED BY THIS WORK SHALL BE RESTORED TO A CONDITION EQUAL TO OR BETTER THAN THE CONDITION EXISTING PRIOR TO COMMENCING CONSTRUCTION UNLESS SPECIFICALLY EXEMPTED BY THE PLANS. COSTS TO BE INCIDENTAL TO OTHER CONSTRUCTION AND NO EXTRA COMPENSATION TO BE ALLOWED.
21. INSTALLATION OF ALL STORM SEWERS, INLETS, MANHOLES, AND APPURTENANCES SHALL BE IN ACCORDANCE WITH THE REQUIREMENTS OF THE APPLICABLE SECTIONS OF THE CITY OF JACKSONVILLE STANDARD SPECIFICATIONS, OR AS INDICATED ON THE DRAWINGS.
22. THE LIMITS OF CONSTRUCTION SHOWN ON THE PLANS SHALL BE STRICTLY OBSERVED BY THE CONTRACTOR. ALL INGRESS, EGRESS AND TRAFFIC PATTERNS ON THE SITE SHALL BE WITHIN THE LIMITS OF CONSTRUCTION OR ON HAUL ROADS SHOWN ON THE DRAWINGS.
23. ALL REINFORCED CONCRETE PIPE (RCP) SHALL BE CLASS III OR STRONGER.
24. WATER AND SEWER CROSSING(S):
    A. WHERE WATER MAINS MUST PASS OVER STORM, SANITARY AND/OR EFFLUENT REUSE LINES AND A MINIMUM CLEARANCE OF 18" CANNOT BE MAINTAINED, THE WATER MAIN SHALL BE CONSTRUCTED OF MECHANICAL JOINT DUCTILE IRON PIPE 10' EQUIDISTANT EACH SIDE OF THE CROSSING AND PROVIDE A 6" MINIMUM CLEARANCE BETWEEN THE WATER MAIN AND THE OTHER UTILITY.
    B. A HORIZONTAL SEPARATION OF 10' MUST BE MAINTAINED BETWEEN POTABLE WATER LINES AND NON-POTABLE LINES. WHEN THIS IS NOT POSSIBLE, REPLACE PVC WITH MECHANICAL JOINT DUCTILE IRON PIPE AND LAY IN SEPARATE TRENCH. IN CASE OF RESTRICTED ACCESS REUSE WATER, A 5' MINIMUM HORIZONTAL SEPARATION IS ACCEPTABLE.
25. NO REPRESENTATION IS MADE REGARDING BALANCED EARTHWORK, ANY EXCESS MATERIAL, OR MATERIAL NOT SUITABLE FOR USE AS BACKFILL, OR AS INDICATED ON THE DRAWINGS SHALL BE REMOVED FROM THE SITE AND PROPERLY DISPOSED OF BY THE CONTRACTOR.
26. IN AREAS REQUIRING FILL MATERIAL, THE CONTRACTOR WILL STRIP OR OTHERWISE REMOVE ALL VEGETATION SUCH AS BRUSH, HEAVY SODS, HEAVY GROWTH OF GRASS, DECAYED VEGETABLE MATTER, RUBBISH AND ANY OTHER DELETERIOUS MATERIAL BEFORE EMBANKMENT IS STARTED. IMMEDIATELY PRIOR TO THE PLACING OF FILL MATERIALS, THE ENTIRE AREA UPON WHICH FILL IS TO BE PLACED, SHALL BE SCARIFIED.
27. ABSOLUTELY NO WORK WILL BE ALLOWED WITHIN ANY CONSERVATION AREA, BUFFER AREA, MITIGATION AREA, OR DESIGNATED WETLAND AREA UNLESS SO SPECIFICALLY DESCRIBED BY THE PLANS AND GRANTED BY REASON OF PERMIT FROM THE GOVERNMENTAL ENTITY HAVING JURISDICTION OVER SAID AREA.

GEOTECHNICAL RECOMMENDATIONS

1. OVER-EXCAVATION SHALL BE PERFORMED AS NECESSARY TO REMOVE ANY A-8 (AASHTO M-145) MUCK, PLASTIC MATERIALS, AND OTHER UNSUITABLE MATERIALS AS DIRECTED BY THE ENGINEER. BACKFILL WITH A-3 (AASHTO M-145) SAND. THE SOIL BELOW DRAINAGE STRUCTURES FOUNDATIONS SHALL BE COMPACTED IN ACCORDANCE WITH SECTION 455-31. TO ACHIEVE THE COMPACTION REQUIREMENTS; EXISTING SOILS NOT ALREADY OVER-EXCAVATED AND NOT MEETING COMPACTION REQUIREMENTS SHALL BE EXCAVATED 12 INCHES BELOW FOUNDATIONS AND BACKFILLED WITH A-3 SAND WHICH HAS A MOISTURE CONTENT AT OR BELOW OPTIMUM.
2. THE CONTRACTOR SHALL ANTICIPATE THAT DEWATERING WILL BE REQUIRED TO FACILITATE CONSTRUCTION. DEWATERING BY NORMAL PUMPING METHODS IS NOT ANTICIPATED TO BE ADEQUATE FOR PROPER PREPARATION/ COMPACTION OF THE FOUNDATION CONSTRUCTION SOILS. ALL FOUNDATIONS SHALL BE CONSTRUCTED IN THE DRY. THE CONTRACTOR SHALL USE EXTENSIVE WELL POINTS, SUMPS, HORIZONTAL WELLS AND/OR OTHER NECESSARY DEWATERING METHODS AS REQUIRED TO DEWATER FOUNDATION AND EXCAVATIONS IN ACCORDANCE WITH SECTION 455-28 AND 455-29.
3. CONTRACTOR SHALL REFER TO AND FOLLOW SITE GEOTECHNICAL EXPLORATION REPORT.

UTILITY OWNERS & CONTACTS

1. THE CONTRACTOR SHALL NOTIFY THE APPROPRIATE UTILITY COMPANY FORTY-EIGHT (48) HOURS IN ADVANCE OF ANY EXCAVATION INVOLVING ITS UTILITIES SO THAT A COMPANY REPRESENTATIVE CAN BE PRESENT. THE LOCATION OF THE UTILITIES SHOWN IN THE PLANS ARE APPROXIMATE ONLY. THE EXACT LOCATION SHALL BE DETERMINED BY THE CONTRACTOR DURING CONSTRUCTION.

   UTILITY OWNERS:

   JACKSONVILLE ELECTRIC AUTHORITY (JEA)
   WILLIAM (BILLY) STEWARD
   21 WEST CHURCH STREET T-4
   JACKSONVILLE, FL 32202-3139
   904-665-4712
   MOBILE 904-705-3162

   CITY OF JACKSONVILLE DEPT. OF PUBLIC WORKS
   DAVID D. HAHN, P.E.
   ED BALL BUILDING
   HOGAN STREET, 10TH FLOOR
   JACKSONVILLE, FL 32202
   904-630-4733

   BELL SOUTH
   JAMES NEAL
   301 WEST BAY ST. ROOM 11AA1
   JACKSONVILLE, FLORIDA 32202
   904-350-2255

   MEDIA ONE CABLE
   PAUL LARRABE
   904-448-3725

   TECO PEOPLE'S GAS
   JOHN R. CUNNINGHAM
   4040 PHILLIPS HIGHWAY
   JACKSONVILLE, FL. 32207
   904-739-1211

2. THE CONTRACTOR SHALL BE RESPONSIBLE TO VERIFY IF OTHER UTILITIES (NOT SHOWN IN THE PLANS) EXIST WITHIN THE AREA OF CONSTRUCTION. SHOULD THERE BE OTHER UTILITIES, THE CONTRACTOR SHALL NOTIFY THE APPROPRIATE UTILITY OWNERS TO RESOLVE UTILITY CONFLICTS AND UTILITY ADJUSTMENTS, AS REQUIRED. THE CONTRACTOR IS RESPONSIBLE FOR PROTECTION OF ALL UTILITIES TO REMAIN IN PLACE.
3. UTILITIES ARE TO BE ADJUSTED OR RELOCATED BY THE UTILITY COMPANIES UNLESS OTHERWISE NOTED.

CONSTRUCTION NOTES

1. CONTRACTOR SHALL SUBMIT A DETAILED WORK PLAN WITHIN 15 DAYS OF NOTICE TO PROCEED WHICH WILL INCLUDE THE DETAILS OF MEANS AND METHODS AND CONSTRUCTION SEQUENCE.
2. DUST CONTROL SHALL BE PROVIDED AT ALL TIMES AS NECESSARY.
3. CONTRACTOR SHALL BE RESPONSIBLE FOR OBTAINING DEWATERING PERMIT. DEWATERING PLAN TO BE SUBMITTED TO ENGINEER FOR APPROVAL PRIOR TO ANY DEWATERING OR SUBMITTING APPLICATION FOR CONSUMPTIVE USE PERMIT.

SEQUENCE OF CONSTRUCTION

1. EROSION CONTROL
2. CLEARING AND GRUBBING
3. WESTERN DITCH
4. POND & ACCESS ROAD
5. PHASE 6

NOTE: THIS SEQUENCE OF CONSTRUCTION IS NOT INTENDED TO SHOW ALL REQUIRED CONSTRUCTION. MANY ACTIVITIES MAY STILL BE REQUIRED THAT ARE NOT SPECIFICALLY IDENTIFIED.

CONTRACTOR MUST AT ALL TIMES MEET THE REQUIREMENTS SET FORTH IN THE FDEP PERMIT AS WELL AS ANY OTHER APPLICABLE LOCAL, STATE, OR FEDERAL REGULATORY REQUIREMENTS.

INDEX OF SHEETS

INDEX OF SHEETS

JOHN G. LADNER
P.E. NO. 037969

REV. NO.	DATE	DRWN	CHKD	REMARKS

DESIGNED BY: B. KADAMBALA
DRAWN BY: B. CHAPMAN
SHEET CHK'D BY: J. HOFFMAN
CROSS CHK'D BY: I. POLEMATIDIS
APPROVED BY: J. LADNER
DATE: JULY 2013

CDM Smith
8381 Dix Ellis Trail., Suite 400
Jacksonville, Fl 32256
Tel: (904) 731-7109
FL COA NO. ED-0000020

CITY OF JACKSONVILLE

TRAIL RIDGE LANDFILL PHASES 6-14
CLASS 1 CELL EXPANSION

GENERAL NOTES AND INDEX OF SHEETS

PROJECT NO. 9012-80695
FILE NAME: G001NOTE

SHEET NO.
G-1

FOR PERMIT- NOT FOR CONSTRUCTION

EROSION CONTROL

IT IS THE CONTRACTORS RESPONSIBILITY TO IMPLEMENT THE EROSION AND TURBIDITY CONTROLS AS SHOWN ON THE EROSION AND TURBIDITY CONTROL PLAN. IT IS ALSO THE CONTRACTORS RESPONSIBILITY TO ENSURE THESE CONTROLS ARE PROPERLY INSTALLED, MAINTAINED AND FUNCTIONING PROPERLY TO PREVENT TURBID OR POLLUTED WATER FROM LEAVING THE PROJECT SITE. THE CONTRACTOR WILL ADJUST THE EROSION AND TURBIDITY CONTROLS SHOWN ON THE EROSION AND TURBIDITY CONTROL PLAN AND ADD ADDITIONAL CONTROL MEASURES, AS REQUIRED,TO ENSURE THE SITE MEETS ALL FEDERAL, STATE AND LOCAL EROSION AND TURBIDITY CONTROL REQUIREMENTS. THE FOLLOWING BEST MANAGEMENT PRACTICES WILL BE IMPLEMENTED BY THE CONTRACTOR AS REQUIRED BY THE EROSION AND TURBIDITY CONTROL PLAN AND AS REQUIRED SITE BY THE REGULATORY AGENCIES.

1. SEDIMENT BASINS AND TRAPS, PERIMETER DITCHES, SEDIMENT BARRIERS AND OTHER MEASURES INTENDED TO TRAP SEDIMENT SHALL BE CONSTRUCTED AS A FIRST STEP BEFORE ANY LAND–DISTURBING TAKES PLACE TO MEET THE EROSION AND TURBIDITY REQUIREMENTS IMPOSED ON THE PROJECT.
2. ALL SEDIMENT CONTROL MEASURES ARE TO BE ADJUSTED TO MEET FIELD CONDITIONS AT THE TIME OF CONSTRUCTION AND BE CONSTRUCTED PRIOR TO ANY GRADING OR DISTURBANCE OF EXISTING SURFACE MATERIAL ON BALANCE OF SITE. PERIMETER SEDIMENT BARRIERS SHALL BE CONSTRUCTED TO PREVENT SEDIMENT OR TRASH FROM FLOWING OR FLOATING ON TO ADJACENT PROPERTIES.
3. DURING CONSTRUCTION OF THE PROJECT SOIL STOCK PILES SHALL BE STABILIZED OR PROTECTED WITH SEDIMENT TRAPPING MEASURES. THE CONTRACTOR IS RESPONSIBLE FOR THE TEMPORARY PROTECTIONS AND PERMANENT STABILIZATION OF ALL SOIL STOCKPILES ON SITE AS WELL AS SOIL INTENTIONALLY TRANSPORTED FROM THE PROJECT SITE.
4. AFTER ANY RAINFALL EVENT ≥ 0.5 INCHES SEDIMENT CONTROL STRUCTURES WILL BE INSPECTED FOR INTEGRITY. ANY DAMAGED DEVICES SHALL BE REPAIRED IMMEDIATELY.
5. CONCENTRATED RUNOFF SHALL NOT FLOW DOWN CUT OR FILL SLOPES UNLESS CONTAINED WITHIN AN ADEQUATE TEMPORARY OR PERMANENT CHANNEL, FLUME OR SLOPE DRAIN STRUCTURE.
6. WHENEVER WATER SEEPS FROM A SLOPE FACE ADEQUATE DRAINAGE OR OTHER PROTECTION SHALL BE PROVIDED.
7. SEDIMENT WILL BE PREVENTED FROM ENTERING ANY STORM DRAIN SYSTEM, DITCH, OR CHANNEL. ALL STORM SEWER INLETS THAT ARE MADE OPERABLE DURING CONSTRUCTION SHALL BE PROTECTED SO THAT SEDIMENT–LADEN WATER CANNOT ENTER THE CONVEYANCE SYSTEM WITHOUT FIRST BEING FILTERED OR OTHERWISE TREATED TO REMOVE SEDIMENT. GRATE INLETS AND CURB INLETS SHALL BE PROTECTED WITH GRATE INLET PROTECTION PCD–1000 AND CURB INLET PROTECTION PRODUCED BY SUNTREE ISLES, INC., OR APPROVED EQUAL.
8. BEFORE TEMPORARY OR NEWLY CONSTRUCTED STORMWATER CONVEYANCE CHANNELS ARE MADE OPERATIONAL ADEQUATE OUTLET PROTECTION AND ANY REQUIRED TEMPORARY OR PERMANENT CHANNEL LINING SHALL BE INSTALLED IN BOTH THE CONVEYANCE CHANNEL AND RECEIVING CHANNEL.
9. WHEN WORK IN A LIVE WATERCOURSE IS PERFORMED, PRECAUTIONS SHALL BE TAKEN TO MINIMIZE ENRICHMENT, CONTROL SEDIMENT TRANSPORT, AND STABILIZE THE WORK AREA TO THE GREATEST EXTENT POSSIBLE DURING CONSTRUCTION. NONERODIBLE MATERIAL SHALL BE USED FOR THE CONSTRUCTION OF CAUSEWAYS AND COFFERDAMS. EARTHEN FILL MAY BE USED FOR THESE STRUCTURES IF ARMORED BY NONERODIBLE COVER MATERIALS.
10. STOCKPILING MATERIAL: NO EXCAVATED MATERIAL SHALL BE STOCKPILED IN SUCH A MANNER AS TO DIRECT RUNOFF DIRECTLY OFF THE PROJECT SITE INTO ANY ADJACENT WATER BODY OR STORM WATER COLLECTION FACILITY.
11. EXPOSED AREA LIMITATION: THE SURFACE AREA OF OPEN, RAW ERODIBLE SOIL EXPOSED BY CLEARING AND GRUBBING OPERATIONS OR EXCAVATION AND FILLING OPERATIONS SHALL NOT EXCEED 1 ACRE. IF THE TOTAL AREA TO BE CLEARED IS EQUAL TO, OR EXCEEDS ONE (1) ACRE, THEN THE CONTRACTOR WILL BE RESPONSIBLE FOR PREPARING A STORMWATER POLLUTION PREVENTION PLAN (SWPPP) IN ACCORDANCE WITH EPA'S NPDES REGULATIONS. THE CONTRACTOR WILL BE RESPONSIBLE FOR SUBMITTING A NOTICE ON INTENT (NOI) TO EPA FORTY–EIGHT (48) HOURS PRIOR TO COMMENCING CONSTRUCTION.
12. A NPDES GENERAL PERMIT FOR STORMWATER DISCHARGES FROM CONSTRUCTION ACTIVITIES APPLIES TO THIS CONTRACT. IT IS THE CONTRACTOR'S RESPONSIBILITY TO SECURE THE NPDES PERMIT PRIOR TO COMMENCEMENT OF CONSTRUCTION.
13. THE CONTRACTOR SHALL BE RESPONSIBLE FOR IMPLEMENTING, MONITORING, AND MODIFYING THE NPDES PERMIT AND FOR THE SWPPP FOR CONSTRUCTION ACTIVITIES TO MEET CHANGING PROJECT SITE CONDITIONS. PAYMENT FOR ALL WORK AND MATERIALS NECESSARY FOR PREPARATION, MODIFICATION, SUBMITTAL OF THE NPDES AND/OR SWPPP FOR CONSTRUCTION ACTIVITIES AND FOR IMPLEMENTATION DURING CONSTRUCTION SHALL BE INCLUDED IN THE PERMIT CONFORMANCE AND EROSION CONTROL PAY ITEM (LUMP SUM). NO ADDITIONAL COMPENSATION SHALL BE ALLOWED.
14. WHEN ALL DISTURBED SOILS HAVE BEEN STABILIZED AND TEMPORARY EROSION AND SEDIMENT CONTROL MEASURES HAVE BEEN REMOVED, THIS CONSTITUTES THE ELIMINATION OF STORMWATER DISCHARGES ASSOCIATED WITH THE CONSTRUCTION ACTIVITIES. AT THIS TIME THE CONTRACTOR SHALL COMPLETE AND FILE A NOTICE OF TERMINATION (NOT) TO APPROPRIATE PERMITTING AGENCIES.
15. TEMPORARY SEEDING: AREAS OPENED BY CONSTRUCTION OPERATIONS AND THAT ARE NOT ANTICIPATED TO BE RE–EXCAVATED OR DRESSED AND RECEIVE FINAL GRASSING TREATMENT WITHIN 30 DAYS SHALL BE SEEDED WITH A QUICK GROWING GRASS SPECIES WHICH WILL PROVIDE AN EARLY COVER DURING THE SEASON IN WHICH IT IS PLANTED AND WILL NOT LATER COMPETE WITH THE PERMANENT GRASSING.
16. TEMPORARY GRASSING: THE SEEDED OR SEEDED AND MULCHED AREA(S) SHALL BE ROLLED AND WATERED OR HYDROMULCHED OR OTHER SUITABLE METHODS IF REQUIRED TO ASSURE OPTIMUM GROWING CONDITIONS FOR THE ESTABLISHMENT OF A GOOD GRASS COVER. TEMPORARY GRASSING SHALL BE THE SAME MIX & AMOUNT REQUIRED FOR PERMANENT GRASSING IN THE CONTRACT SPECIFICATIONS.
17. TEMPORARY REGRASSING : IF, AFTER 14 DAYS FROM SEEDING, THE TEMPORARY GRASSED AREAS HAVE NOT ATTAINED A MINIMUM OF 75 PERCENT GOOD GRASS COVER, THE AREA WILL BE REWORKED AND ADDITIONAL SEED APPLIED SUFFICIENT TO ESTABLISH THE DESIRED VEGETATIVE COVER AT NO ADDITIONAL COST TO OWNER.
18. MAINTENANCE: ALL FEATURES OF THE PROJECT DESIGNED AND CONSTRUCTED TO PREVENT EROSION AND SEDIMENT SHALL BE MAINTAINED DURING THE LIFE OF THE CONSTRUCTION SO AS TO FUNCTION AS THEY WERE ORIGINALLY DESIGNED AND CONSTRUCTED.
19. PERMANENT EROSION CONTROL: THE EROSION CONTROL FACILITIES OF THE PROJECT SHOULD BE INSTALLED AND MAINTAINED TO MINIMIZE THE IMPACT ON THE OFFSITE FACILITIES.
20. PERMANENT SEEDING: ALL AREAS WHICH HAVE BEEN DISTURBED BY CONSTRUCTION WILL, AS A MINIMUM, BE SEEDED. THE SEEDING MIX MUST PROVIDE BOTH LONG–TERM VEGETATION AND RAPID GROWTH SEASONAL VEGETATION. SLOPES STEEPER THAN 3:1 SHALL BE SODDED WITH STAKED SOD.
21. THE CONTRACTOR SHALL STAGE THE WORK SUCH THAT THE EXISTING STORMWATER CONVEYANCE IS ALWAYS MAINTAINED AND NO FLOODING IS ALLOWED DURING CONSTRUCTION. DEWATERING, TEMPORARY CHECK DAM, TEMPORARY DRAINAGE STRUCTURES, COFFER DAM, BY–PASS PUMPING AND/OR ANY OTHER MEANS AND METHODS REQUIRED FOR CONSTRUCTION IN THE PROJECT AREA SHALL BE INCLUDED IN THE COST OF PERMIT CONFORMANCE AND EROSION CONTROL – LUMP SUM (LS). NO ADDITIONAL COMPENSATION SHALL BE ALLOWED.

ABBREVIATIONS

ADJUSTABLE	ADJ	NOT TO SCALE	NTS
AHEAD OF STATION	AH	NUMBER	NO
ALUMINUM	AL, ALUM	ON CENTER	OC
ANGLE	<	OPPOSITE	OPP
BACK OF STATION	BK	OPTION	OPT
BALL VALVE	BAV	OPENING	OPNG
BASELINE OF SURVEY	℄	OR EQUAL	O/E
BELOW	BEL	PAVEMENT	PVMT, PAVT
BENCHMARK	BM	PERFORATED	PERF
BETWEEN	BTWN	POINT OF CURVATURE	POC
BITUMINOUS COATED CORRUGATED METAL PIPE	BCCMP	POINT OF TANGENCY	POT
BURIED TELEPHONE	BT	POINT	PT
CENTER LINE OF CONSTRUCTION	℄	POLYETHYLENE PIPE	PP
CENTER TO CENTER	CC	POLYVINYL CHLORIDE	PVC
CONCRETE	CONC	POUND(S)	LB(S)
CONCRETE BOX CULVERT	CBC	PLATE	PL
CONSTRUCT	CONST	PRECAST	PRCST
CORRUGATED METAL PIPE	CMP	PROFILE GRADE LINE	PGL
CENTER (ED)	CTR	PROPOSED DRAINAGE EASEMENT	PDE
CROSS SECTION	X–SEC	RADIUS	RAD, R
DEMOLITION	DEMO	REINFORCED CONCRETE PIPE	RCP
DIAMETER	DIA, DIAM	REQUIRED	REQ'D
DIAGONAL	DIAG	RESTRAINED JOINT	RJ
DIMENSION	DIM	RIGHT	RT, R
DOWNSTREAM	D/S	RIGHT OF WAY	R/W, ROW
DISCHARGE	DISCH	SANITARY SEWER	SAN, S
DITCH BOTTOM INLET	DBI	SECTION	SEC
DRAWING	DWG	SHEET	SH, SHT
DUCTILE IRON PIPE	DIP	SIDEWALK	SDWK, S/W
DUCTILE IRON	DI	SLIP–ON JOINT	SJ
EACH	EA	SQUARE FEET	SQ. FT., SF
ELEVATION	EL, ELEV	STAINLESS STEEL	SS
EDGE OF PAVEMENT	EOP, EP	STANDARD	ST'D
EXISTING	EXIST	STATION	STA
FIBERGLASS REINFORCED PIPE	FRP	STEEL	STL
FINISH	FIN	STEEL PIPE	SP
FLANGE	FLG	STORM SEWER	SS, STORM
FLARED END SECTION	FES	SYMMETRICAL	SYMM
FLOOR	FL	TANGENT TO CURVE	TC
FURNISHED BY OTHERS	FBO	TEMPORARY CONSTRUCTION EASEMENT	TCE
FEET/FOOT	FT	THICK	THK
GAS MAIN	GM	TIED JOINT	TJ
HEIGHT	HT	TOP OF CURB	TOC
HIGH POINT	HP	TYPICAL	TYP
INSTALL	INST	TEMPORARY	TEMP
LEFT	L, LT	UPSTREAM	U/S
LOW POINT	LP	UTILITY EASEMENT	UE
MATERIAL	MTL	VERIFIED VERTICAL ELEVATION AND HORIZONTAL LOCATION	Vvh, VVH
MANHOLE	MH	VERTICAL	VERT
MAXIMUM	MAX	VERTICAL CURVE	VC
MECHANICAL	MECH	WATER	WTR
METAL	MET	WATER LEVEL	WL
MINIMUM	MIN	WATER MAIN	WM
MITERED END SECTION	MES	WEATHERPROOF	WPF
MOUNTED	MTD	WEST	W
NOMINAL	NOM	WITH	W/
NOT IN CONTRACT	NIC		

LEGEND:

- PROPERTY LINE
- EXISTING RAILROAD TRACKS
- EXISTING SPOT ELEVATION (75)
- EXISTING FENCE
- PROPOSED CONTOUR (8)
- EXISTING CONTOUR (8)
- EASEMENT
- PROPOSED PIPE
- AREA TO BE CLEARED AND GRUBBED
- TO BE REMOVED
- PROPOSED FENCE
- PROPOSED FENCE TO BE INSTALLED BY OTHERS
- SILT FENCE
- TURBIDITY BARRIER
- HYDRAULIC BARRIER TRENCH TO BE RECONSTRUCTED
- PROPOSED HYDRAULIC BARRIER TRENCH
- CONE PENETRATION TEST
- PIEZOMETER
- WETLANDS

SECTION CUT SYMBOLS

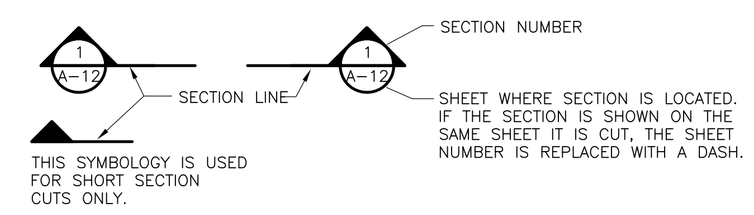

DETAIL CALL OUT SYMBOLS

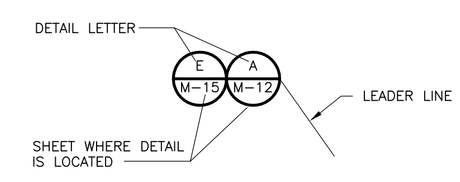

IF MULTIPLE DETAILS REFER TO THE SAME AREA OF THE DRAWING, THE BUBBLES ARE STACKED SIDE BY SIDE.

DRAWING, SECTION AND DETAIL TITLES

SUBTITLE OR DESCRIPTION

PLAN

1/4" = 1'–0"

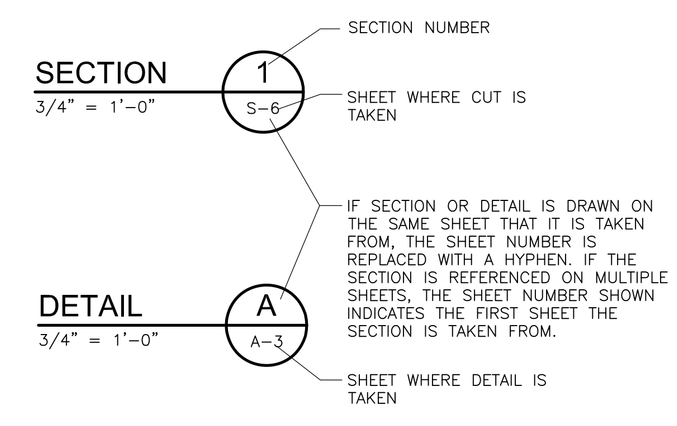

REV. NO.	DATE	DRWN	CHKD	REMARKS

DESIGNED BY: R. KADAMBALA
DRAWN BY: B. CHAPMAN
SHEET CHK'D BY: J. HOFFMAN
CROSS CHK'D BY: I. POLEMATIDIS
APPROVED BY: J. LADNER
DATE: JULY 2013

CDM Smith
8381 Dix Ellis Trail, Suite 400
Jacksonville, Fl 32256
Tel: (904) 731-7109
FL COA NO. ED-0000020

CITY OF JACKSONVILLE

TRAIL RIDGE LANDFILL PHASES 6-14
CLASS 1 CELL EXPANSION

SYMBOLS AND ABBREVIATIONS

PROJECT NO. 9012–80695
FILE NAME: G002SYMB
SHEET NO. G-2

FOR PERMIT- NOT FOR CONSTRUCTION

NOTES:

1) UNDERGROUND IMPROVEMENTS NOT LOCATED, EXCEPT AS EVIDENCED BY ABOVE GROUND FEATURES THEREOF.

2) DITCH LOCATIONS AWAY FROM MAIN NORTH/SOUTH TRAILROAD ARE INCOMPLETE AS THEY ARE BASED ON 200 (OR MORE) FOOT GRID. FURTHER TOPOGRAPHIC DATA IS NEEDED TO BETTER DEFINE THEIR LIMITS.

3) SOME TRAILROADS DEPICTED HEREON PER AERIAL MAPPING.

4) THE SOURCE BENCHMARK IS A CONCRETE MONUMENT WITH A U.S. COASTAL AND GEODETIC SURVEY DISK STAMPED "AJ-59", LOCATED ALONG U.S. HIGHWAY No. 301. THE BENCHMARK IS 800 FEET NORTHERLY OF THE INTERSECTION OF U.S HIGHWAY No. 301 (STATE ROAD No. 204) AND STATE ROAD No. 228. PID No. BD1401, ELEVATION IS 88.41 FEET (NATIONAL GEODETIC VERTICAL DATUM 1929).

SURVEY PERFORMED BY:

ROBERT M. ANGUS ASSOCIATES
14775 OLD ST. AUGUSTINE ROAD
JACKSONVILLE, FL 32258
904-642-8550

REV. NO.	DATE	DRWN	CHKD	REMARKS

DESIGNED BY:
DRAWN BY: B. CHAPMAN
SHEET CHK'D BY: J. HOFFMAN
CROSS CHK'D BY: I. POLEMATIDIS
APPROVED BY: J. LADNER
DATE: JULY 2013

CDM Smith
8381 Dix Ellis Trail., Suite 400
Jacksonville, Fl 32256
Tel: (904) 731-7109
FL COA NO. ED-0000020

CITY OF JACKSONVILLE

TRAIL RIDGE LANDFILL PHASES 6-14
CLASS 1 CELL EXPANSION

EXISTING SITE SURVEY

PROJECT NO. 9012-80695
FILE NAME: C001SGPL

SHEET NO.
C-1

FOR PERMIT- NOT FOR CONSTRUCTION

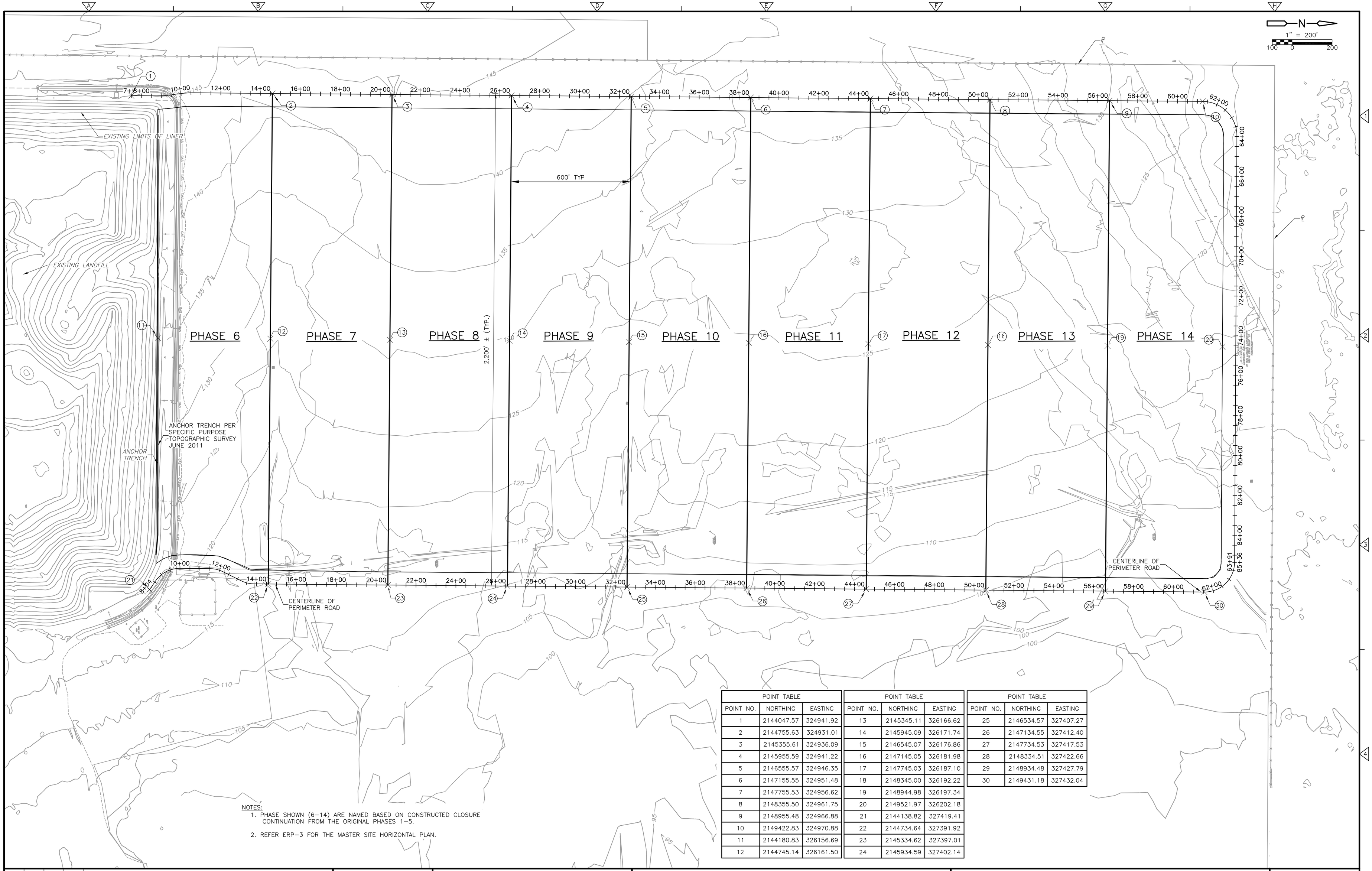

POINT TABLE		
POINT NO.	NORTHING	EASTING
1	2144047.57	324941.92
2	2144755.63	324931.01
3	2145355.61	324936.09
4	2145955.59	324941.22
5	2146555.57	324946.35
6	2147155.55	324951.48
7	2147755.53	324956.62
8	2148355.50	324961.75
9	2148955.48	324966.88
10	2149422.83	324970.88
11	2144180.83	326156.69
12	2144745.14	326161.50

POINT TABLE		
POINT NO.	NORTHING	EASTING
13	2145345.11	326166.62
14	2145945.09	326171.74
15	2146545.07	326176.86
16	2147145.05	326181.98
17	2147745.03	326187.10
18	2148345.00	326192.22
19	2148944.98	326197.34
20	2149521.97	326202.18
21	2144138.82	327419.41
22	2144734.64	327391.92
23	2145334.62	327397.01
24	2145934.59	327402.14

POINT TABLE		
POINT NO.	NORTHING	EASTING
25	2146534.57	327407.27
26	2147134.55	327412.40
27	2147734.53	327417.53
28	2148334.51	327422.66
29	2148934.48	327427.79
30	2149431.18	327432.04

NOTES:

1. PHASE SHOWN (6–14) ARE NAMED BASED ON CONSTRUCTED CLOSURE CONTINUATION FROM THE ORIGINAL PHASES 1–5.
2. REFER ERP–3 FOR THE MASTER SITE HORIZONTAL PLAN.

REV. NO.	DATE	DRWN	CHKD	REMARKS

DESIGNED BY: R. KADAMBALA
DRAWN BY: B. CHAPMAN
SHEET CHK'D BY: J. HOFFMAN
CROSS CHK'D BY: A. SALEH
APPROVED BY: J. LADNER
DATE: JULY 2013

CDM Smith
8381 Dix Ellis Trail., Suite 400
Jacksonville, Fl 32256
Tel: (904) 731-7109
FL COA NO. ED-0000020

CITY OF JACKSONVILLE

TRAIL RIDGE LANDFILL PHASES 6-14
CLASS 1 CELL EXPANSION

HORIZONTAL CONTROL
BUILDOUT LANDFILL PHASING PLAN

PROJECT NO. 9012–80695
FILE NAME: C002STPL
SHEET NO.
C-2

FOR PERMIT- NOT FOR CONSTRUCTION

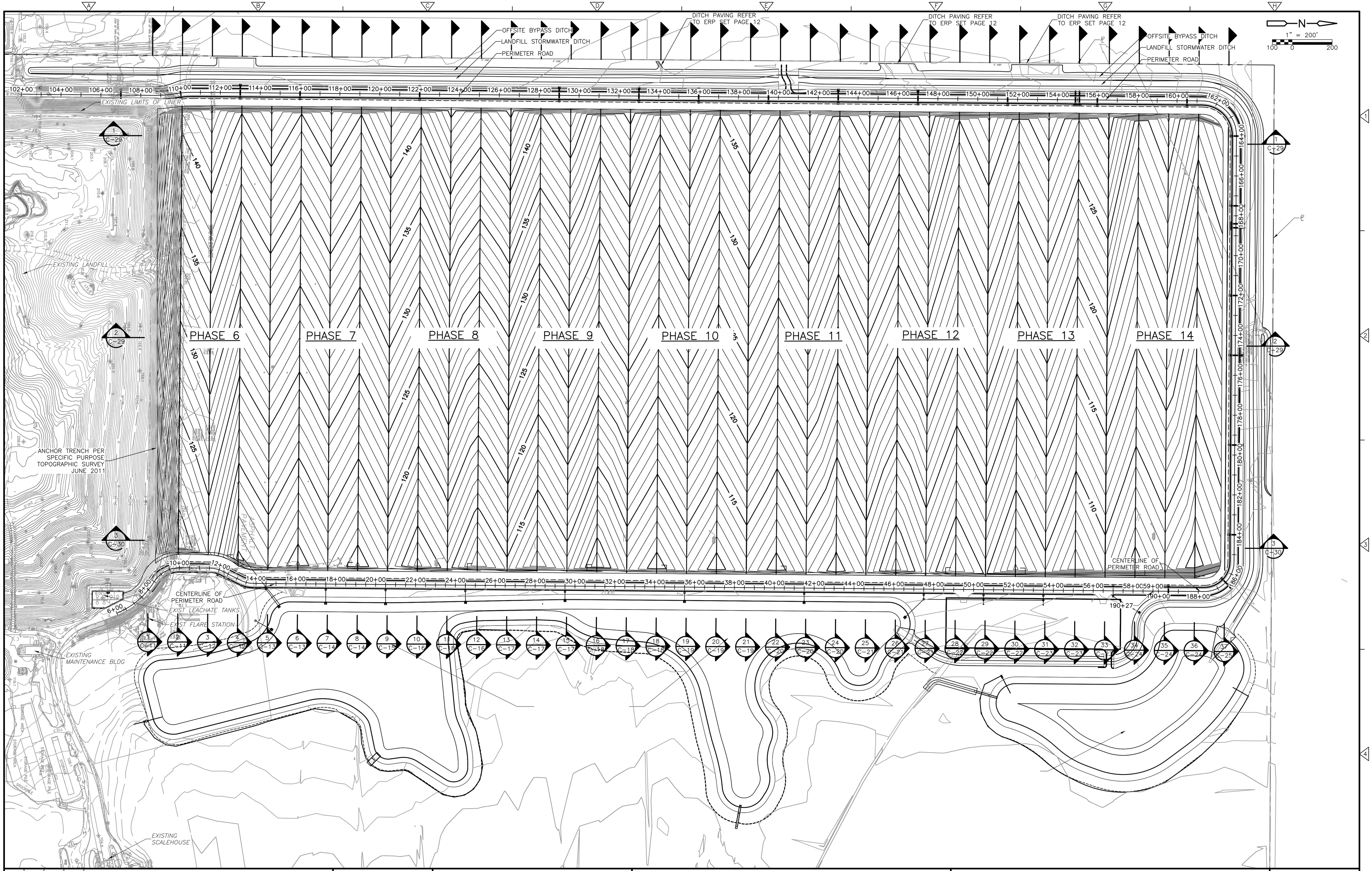

REV. NO.	DATE	DRWN	CHKD	REMARKS

DESIGNED BY: R. KADAMBALA
DRAWN BY: B. CHAPMAN
SHEET CHK'D BY: J. HOFFMAN
CROSS CHK'D BY: I. POLEMATIDIS
APPROVED BY: J. LADNER
DATE: JULY 2013

CDM Smith
8381 Dix Ellis Trail,, Suite 400
Jacksonville, Fl 32256
Tel: (904) 731-7109
FL COA NO. ED-0000020

CITY OF JACKSONVILLE

TRAIL RIDGE LANDFILL PHASES 6-14
CLASS 1 CELL EXPANSION

PROPOSED BUILDOUT TOP
OF SUBGRADE GRADING PLAN

PROJECT NO. 9012-80695
FILE NAME: C003STPL

SHEET NO.
C-3

FOR PERMIT- NOT FOR CONSTRUCTION

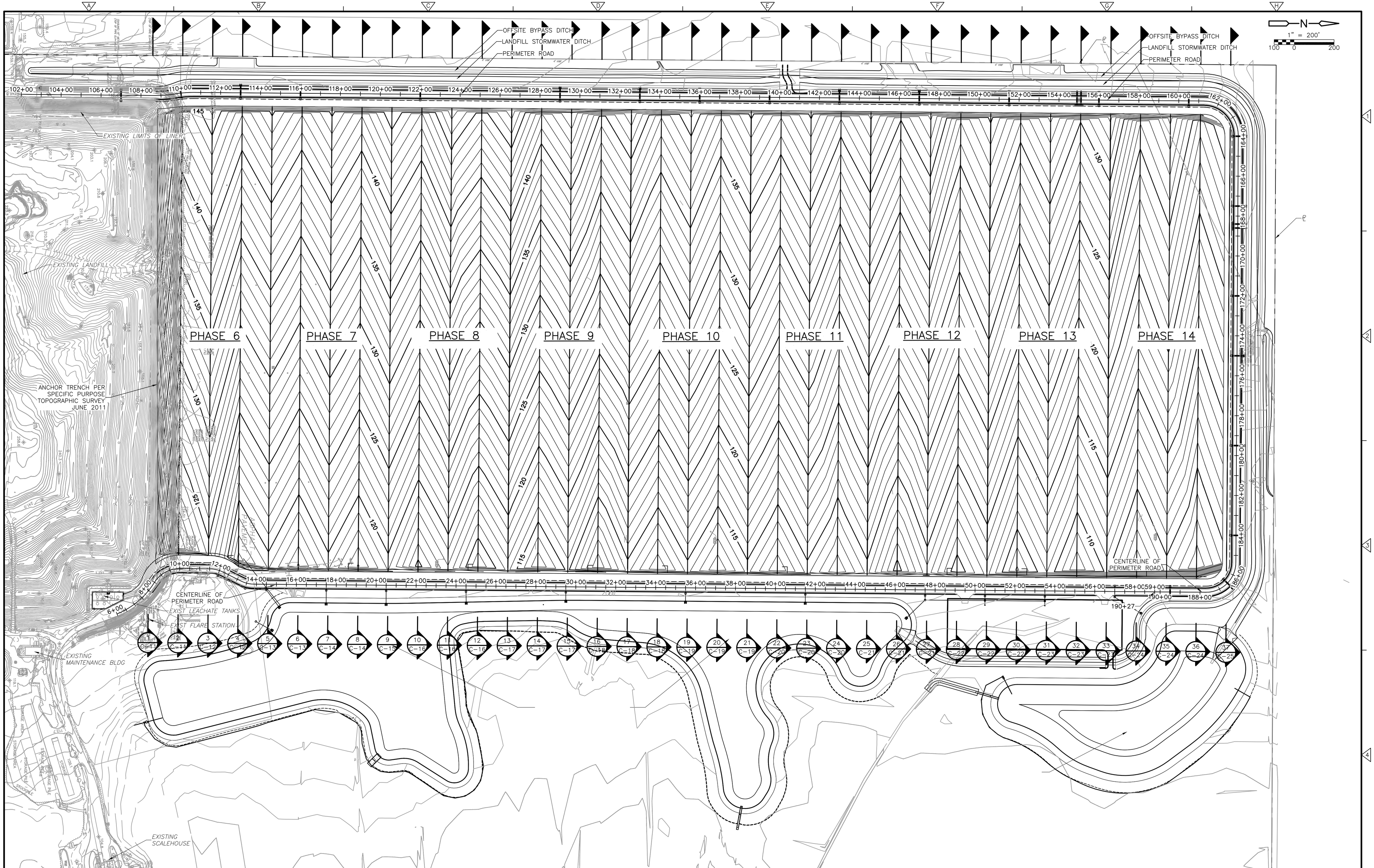

REV. NO.	DATE	DRWN	CHKD	REMARKS

DESIGNED BY: R. KADAMBALA
DRAWN BY: B. CHAPMAN
SHEET CHK'D BY: J. HOFFMAN
CROSS CHK'D BY: I. POLEMATIDIS
APPROVED BY: J. LADNER
DATE: JULY 2013

CDM Smith
8381 Dix Ellis Trail., Suite 400
Jacksonville, Fl 32256
Tel: (904) 731-7109
FL COA NO. ED-0000020

CITY OF JACKSONVILLE

TRAIL RIDGE LANDFILL PHASES 6-14
CLASS 1 CELL EXPANSION

BUILDOUT TOP
OF FINISH GRADING PLAN

PROJECT NO. 9012-80695
FILE NAME: C004STPL
SHEET NO.
C-4

FOR PERMIT- NOT FOR CONSTRUCTION

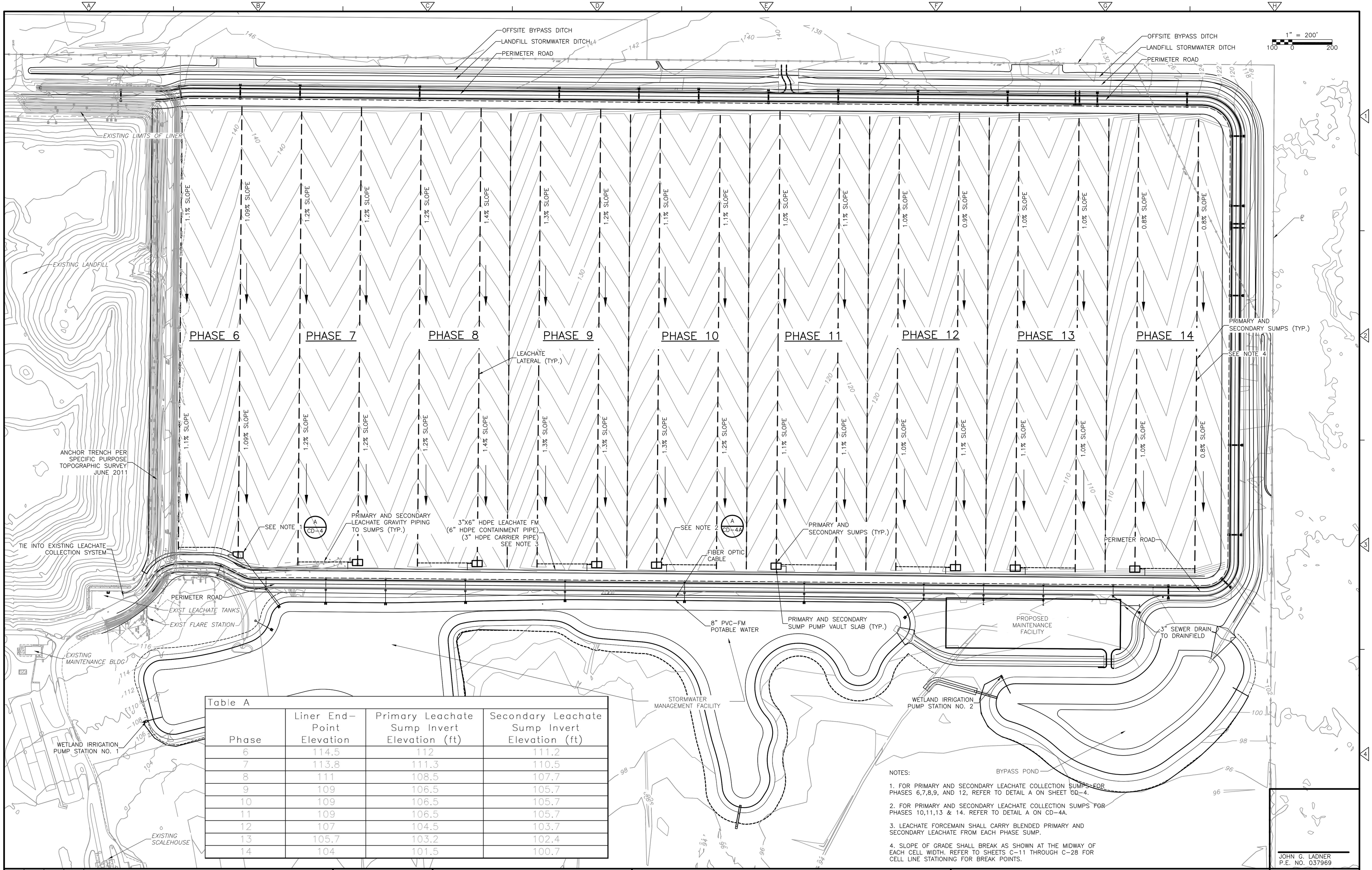

Table A

Phase	Liner End-Point Elevation	Primary Leachate Sump Invert Elevation (ft)	Secondary Leachate Sump Invert Elevation (ft)
6	114.5	112	111.2
7	113.8	111.3	110.5
8	111	108.5	107.7
9	109	106.5	105.7
10	109	106.5	105.7
11	109	106.5	105.7
12	107	104.5	103.7
13	105.7	103.2	102.4
14	104	101.5	100.7

NOTES:

1. FOR PRIMARY AND SECONDARY LEACHATE COLLECTION SUMPS FOR PHASES 6,7,8,9, AND 12, REFER TO DETAIL A ON SHEET CD-4.

2. FOR PRIMARY AND SECONDARY LEACHATE COLLECTION SUMPS FOR PHASES 10,11,13 & 14. REFER TO DETAIL A ON CD-4A.

3. LEACHATE FORCEMAIN SHALL CARRY BLENDED PRIMARY AND SECONDARY LEACHATE FROM EACH PHASE SUMP.

4. SLOPE OF GRADE SHALL BREAK AS SHOWN AT THE MIDWAY OF EACH CELL WIDTH. REFER TO SHEETS C-11 THROUGH C-28 FOR CELL LINE STATIONING FOR BREAK POINTS.

JOHN G. LADNER
P.E. NO. 037969

REV. NO.	DATE	DRWN	CHKD	REMARKS

DESIGNED BY: R. KADAMBALA
DRAWN BY: B. CHAPMAN
SHEET CHK'D BY: J. HOFFMAN
CROSS CHK'D BY: I. POLEMATIDIS
APPROVED BY: J. LADNER
DATE: JULY 2013

CDM Smith
8381 Dix Ellis Trail., Suite 400
Jacksonville, Fl 32256
Tel: (904) 731-7109
FL COA NO. ED-0000020

CITY OF JACKSONVILLE

TRAIL RIDGE LANDFILL PHASES 6-14
CLASS 1 CELL EXPANSION

BUILDOUT LEACHATE COLLECTION AND UTILITY PLAN

PROJECT NO. 9012-80695
FILE NAME: C005STPL

SHEET NO.
C-5

FOR PERMIT- NOT FOR CONSTRUCTION

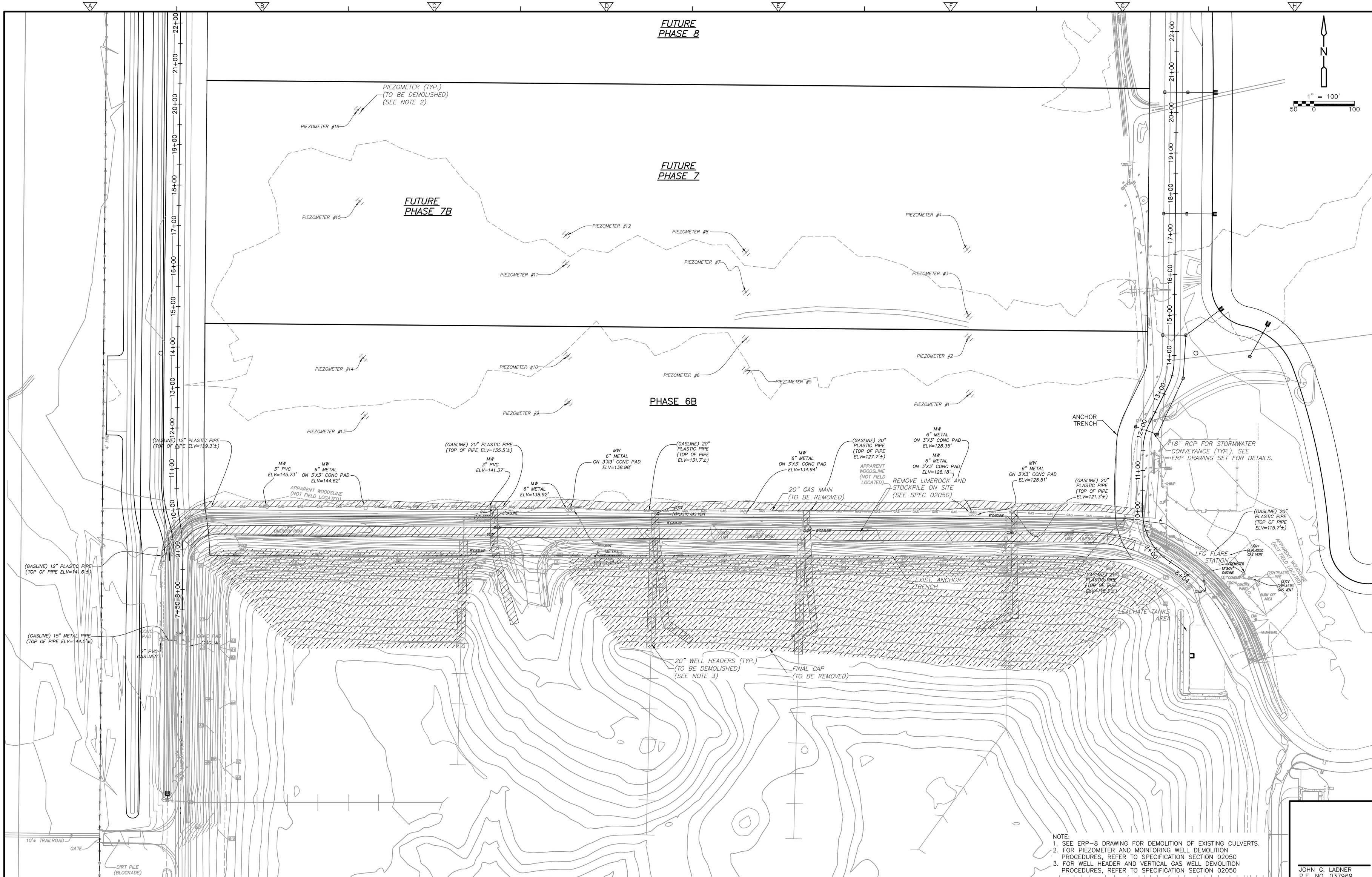

JOHN G. LADNER
P.E. NO. 037969

REV. NO.	DATE	DRWN	CHKD	REMARKS

DESIGNED BY: R. KADAMBALA
DRAWN BY: B. CHAPMAN
SHEET CHK'D BY: J. HOFFMAN
CROSS CHK'D BY: I. POLEMATIDIS
APPROVED BY: J. LADNER
DATE: JULY 2013

CDM Smith
8381 Dix Ellis Trail., Suite 400
Jacksonville, Fl 32256
Tel: (904) 731-7109
FL COA NO. ED-0000020

CITY OF JACKSONVILLE

TRAIL RIDGE LANDFILL PHASES 6-14
CLASS 1 CELL EXPANSION

REMOVAL AND ABANDONMENT
PLAN FOR PERMIT

PROJECT NO. 9012-80695
FILE NAME: C006STPL

SHEET NO.
C-6

FOR PERMIT- NOT FOR CONSTRUCTION

Table 1. Proposed Groundwater Monitoring Well Network Construction Summary

Shallow	CDM-7(S)	Background	Existing	Phases 11/12	2,147,741	324,800	2	19	14 to 19
	BMW-1(S)	Background	Proposed	Phases 6/7	2,144,747	324,786	2	15	10 to 15
	BMW-2(S)	Background	Proposed	Phases 8/9/10	2,146,247	324,786	2	19	14 to 19
	BMW-3(S)	Background	Proposed	Phases 13/14	2,149,241	324,800	2	16	11 to 16
	DMW-1(S)	Detection	Proposed	Phase 6	2,144,202	327,321	2	16	11 to 16
	DMW-2(S)	Detection	Proposed	Phase 6	2,144,702	327,367	2	16	11 to 16
	DMW-3(S)	Detection	Proposed	Phase 7	2,145,202	327,371	2	16	11 to 16
	DMW-4(S)	Detection	Proposed	Phase 8	2,145,702	327,375	2	16	11 to 16
	DMW-5(S)	Detection	Proposed	Phase 9	2,146,201	327,379	2	14	9 to 14
	DMW-6(S)	Detection	Proposed	Phase 10	2,146,702	327,383	2	14	9 to 14
	DMW-7(S)	Detection	Proposed	Phase 11	2,147,202	327,388	2	14	9 to 14
	DMW-8(S)	Detection	Proposed	Phase 11	2,147,701	327,392	2	10	5 to 10
	DMW-9(S)	Detection	Proposed	Phase 12	2,148,201	327,397	2	10	5 to 10
	DMW-10(S)	Detection	Proposed	Phase 13	2,148,701	327,401	2	10	5 to 10
	DMW-11(S)	Detection	Proposed	Phase 14	2,149,201	327,405	2	16	11 to 16
	DMW-12(S)	Detection	Proposed	Phase 14	2,149,559	327,056	2	16	11 to 16
	DMW-13(S)	Detection	Proposed	Phase 14	2,149,567	325,556	2	16	11 to 16
Deep	CDM-7(D)	Background	Existing	Phases 11/12	2,147,752	324,801	2	110	100 to 110
	BMW-1(D)	Background	Proposed	Phases 6/7	2,144,747	324,786	2	111	100 to 110
	BMW-2(D)	Background	Proposed	Phases 8/9/10	2,146,247	324,786	2	110	100 to 110
	BMW-3(D)	Background	Proposed	Phases 13/14	2,149,241	324,800	2	110	100 to 110
	DMW-1(D)	Detection	Proposed	Phase 6	2,144,202	327,321	2	100	95 to 100
	DMW-3(D)	Detection	Proposed	Phases 7/8	2,145,202	327,371	2	100	95 to 100
	DMW-5(D)	Detection	Proposed	Phase 9	2,146,201	327,379	2	100	95 to 100
	DMW-7(D)	Detection	Proposed	Phases 10/11	2,147,202	327,388	2	100	95 to 100
	DWM-9(D)	Detection	Proposed	Phases 12/13	2,148,201	327,397	2	100	95 to 100
	DMW-11(D)	Detection	Proposed	Phase 14	2,149,201	327,405	2	100	95 to 100

Notes:

[1] Florida State Plane Coordinate System East Zone (HARN 83)

[2] For proposed monitoring wells, the values are estimated. Actual well depth and screen interval will be determined a the time of well installation based upon a soil boring drilled at each location.

(S) - Shallow monitoring well

(D) - Deep monitoring well

Table 2. Summary of Existing Monitor Wells, Piezometers, and Staff Gauges to be Abandoned During Phase 6 and 7 Constructi

Surface Water	SG-1	Staff Gauge	CDM Smith	2,144,761	326,305	NA
	SG-R-3	Staff Gauge	CDM Smith	2,144,837	327,384	NA
	SG-R-6	Staff Gauge	CDM Smith	2,149,667	326,876	NA
Shallow Zone of Surficial Aquifer	B-9S	Monitor Well	Waste Management Inc.	2,145,687	324,786	-
	B-16S	Monitor Well	Waste Management Inc.	2,144,299	325,395	17.5
	B-17S	Monitor Well	Waste Management Inc.	2,144,295	325,906	16.1
	B-18S	Monitor Well	Waste Management Inc.	2,144,289	326,333	16.5
	B-19S	Monitor Well	Waste Management Inc.	2,144,284	326,888	18.0
	CDM-1P	Piezometer	CDM Smith	2,145,293	327,543	5
	CDM-1S	Monitor Well	CDM Smith	2,145,290	327,543	16
	CDM-2P	Piezometer	CDM Smith	2,146,776	327,479	5
	CDM-2S	Monitor Well	CDM Smith	2,146,773	327,482	14
	CDM-3S	Monitor Well	CDM Smith	2,149,375	327,594	16
	CDM-3P	Piezometer	CDM Smith	2,149,373	327,590	33
	CDM-5P	Piezometer	CDM Smith	2,144,775	324,814	8
	CDM-5S	Monitor Well	CDM Smith	2,144,770	324,815	15
	CDM-6S	Monitor Well	CDM Smith	2,145,669	324,818	29
	CDM-8S	Monitor Well	CDM Smith	2,149,206	325,024	16
	CDM-102S	Piezometer	CDM Smith	2,148,383	327,883	10
	CDM-104S	Piezometer	CDM Smith	2,147,135	328,520	15
	CDM-106S	Piezometer	CDM Smith	2,145,777	328,368	10
	P-1	Piezometer	CDM Smith	2,144,583	326,886	5
	P-2	Piezometer	CDM Smith	2,144,721	326,883	5
	P-3	Piezometer	CDM Smith	2,144,775	326,883	5
	P-4	Piezometer	CDM Smith	2,144,939	326,879	5
	P-5	Piezometer	CDM Smith	2,144,639	326,334	5
	P-6	Piezometer	CDM Smith	2,144,717	326,334	5
	P-7	Piezometer	CDM Smith	2,144,833	326,333	5
	P-8	Piezometer	CDM Smith	2,144,931	326,334	5
	P-9	Piezometer	CDM Smith	2,144,560	325,895	5
	P-10	Piezometer	CDM Smith	2,144,674	325,893	5
	P-11	Piezometer	CDM Smith	2,144,903	325,891	5
	P-12	Piezometer	CDM Smith	2,144,974	325,889	5
	P-13	Piezometer	CDM Smith	2,144,527	325,393	5
	P-14	Piezometer	CDM Smith	2,144,670	325,387	5
	P-15	Piezometer	CDM Smith	2,145,056	325,379	5
	P-16	Piezometer	CDM Smith	2,145,282	325,375	5
Intermediate Zone of Surficial Aquifer	B-9I	Monitor Well	Waste Management Inc.	2,145,692	324,784	-
	B-17I	Monitor Well	Waste Management Inc.	2,144,295	325,893	57.9
	B-19I	Monitor Well	Waste Management Inc.	2,144,284	326,893	56.5
	CDM-1I	Monitor Well	CDM Smith	2,145,286	327,545	60
	CDM-2I	Monitor Well	CDM Smith	2,146,769	327,485	57
	CDM-3I	Monitor Well	CDM Smith	2,149,373	327,590	59
	CDM-5I	Monitor Well	CDM Smith	2,144,765	324,816	60
	CDM-6I	Monitor Well	CDM Smith	2,145,674	324,817	66
	CDM-7I	Monitor Well	CDM Smith	2,147,747	324,800	65
	CDM-8I	Monitor Well	CDM Smith	2,149,208	325,028	60
	CDM-102I	Piezometer	CDM Smith	2,148,383	327,888	50
	CDM-104I	Piezometer	CDM Smith	2,147,140	328,519	40
	CDM-106I	Piezometer	CDM Smith	2,145,779	328,373	50
Deep Zone of Surficial Aquifer	B-17D	Monitor Well	Waste Management Inc.	2,144,295	325,899	124.8
	B-19D	Monitor Well	Waste Management Inc.	2,144,283	326,898	109.0
	CDM-1D	Monitor Well	CDM Smith	2,145,280	327,546	100
	CDM-2D	Monitor Well	CDM Smith	2,146,765	327,488	100
	CDM-5D	Monitor Well	CDM Smith	2,144,760	324,816	111
	CDM-6D	Monitor Well	CDM Smith	2,145,679	324,816	110

Notes:

[1] Florida State Plane Coordinate System East Zone (HARN 83)

(P) - Piezometer

(S) - Shallow Monitor Well

(I) - Intermediate Monitor Well

(D)- Deep Monitor Well

N

1" = 100'

50 0 100

JOHN G. LADNER
P.E. NO. 037969

REV. NO.	DATE	DRWN	CHKD	REMARKS

DESIGNED BY: R. KADAMBALA
DRAWN BY: B. CHAPMAN
SHEET CHK'D BY: J. HOFFMAN
CROSS CHK'D BY: I. POLEMATIDIS
APPROVED BY: J. LADNER
DATE: JULY 2013

CDM Smith
8381 Dix Ellis Trail., Suite 400
Jacksonville, Fl 32256
Tel: (904) 731-7109
FL COA NO. ED-0000020

CITY OF JACKSONVILLE

TRAIL RIDGE LANDFILL PHASES 6-14
CLASS 1 CELL EXPANSION

REMOVAL AND ABANDONMENT
PLAN FOR PERMIT

PROJECT NO. 9012-80695
FILE NAME: C006aSTPL

SHEET NO.
C-6A

FOR PERMIT- NOT FOR CONSTRUCTION

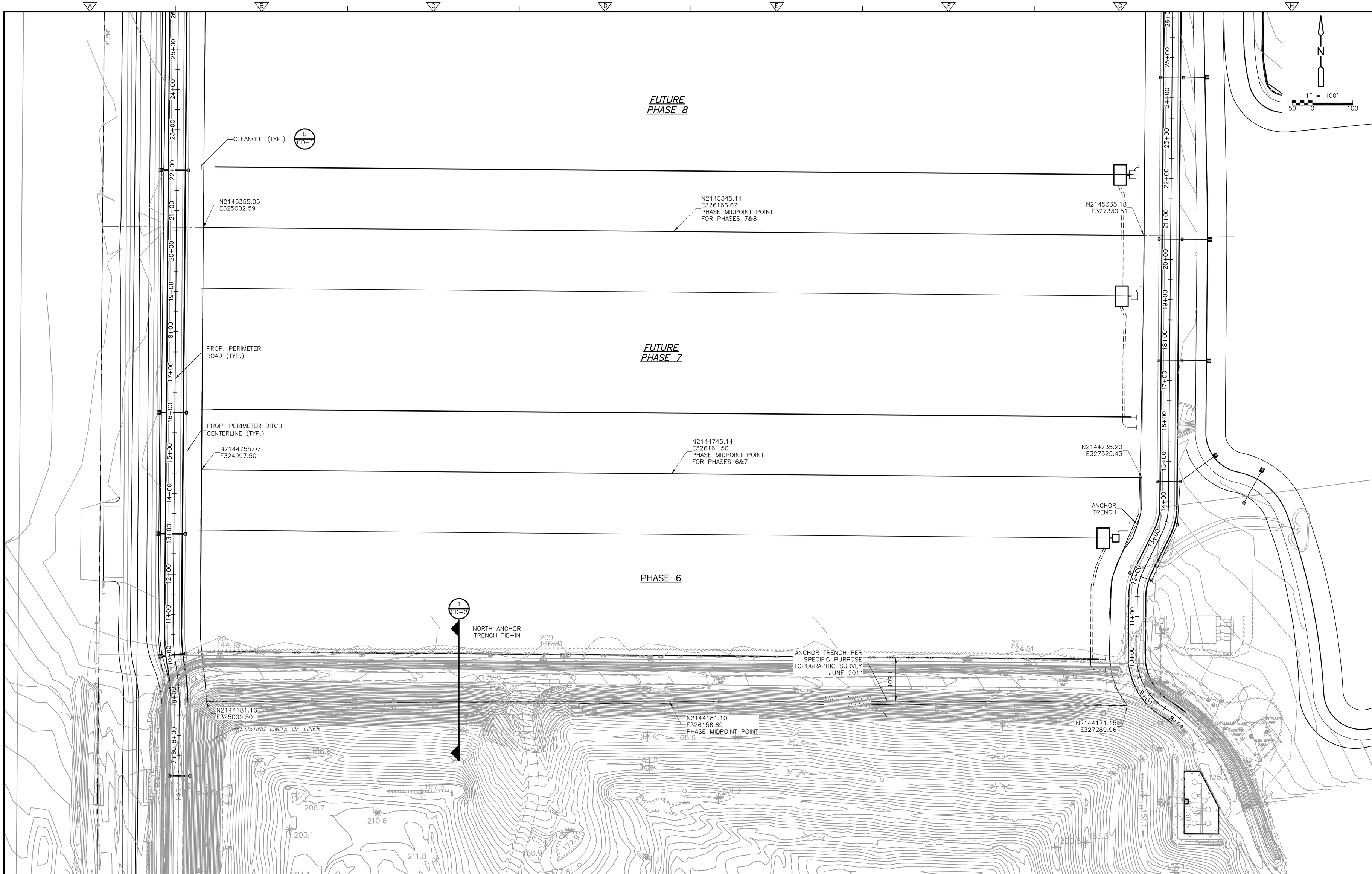

REV. NO.	DATE	DRWN	CHKD	REMARKS

DESIGNED BY: R. KADAMBALA
DRAWN BY: B. CHAPMAN
SHEET CHK'D BY: J. HOFFMAN
CROSS CHK'D BY: I. POLEMATIDIS
APPROVED BY: J. LADNER
DATE: JULY 2013

CDM Smith
8381 Dix Ellis Trail., Suite 400
Jacksonville, Fl 32256
Tel: (904) 731-7109
FL COA NO. ED-0000020

CITY OF JACKSONVILLE

TRAIL RIDGE LANDFILL PHASES 6-14
CLASS 1 CELL EXPANSION

HORIZONTAL CONTROL PLAN FOR PHASE 6

PROJECT NO. 9012-80695
FILE NAME: C007STPL

SHEET NO.
C-7

FOR PERMIT- NOT FOR CONSTRUCTION

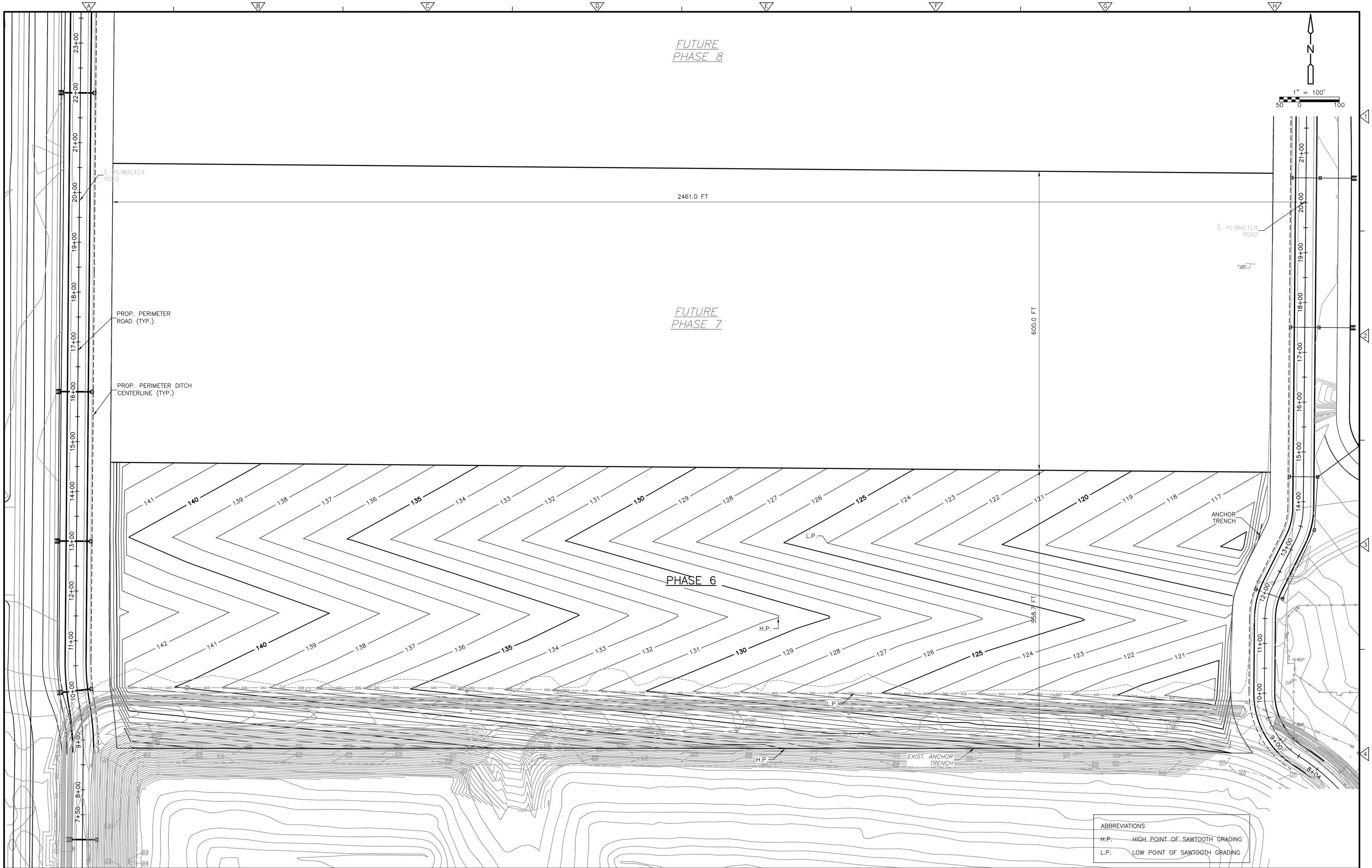

Xref's: [CDM_2436, EG_TR5 TOPO, 11-008-BASE, C_BASE, CE-TRAILRIDGE EXPANSION TOPO] Images: []
Last saved by: CHAPMANBS Time: 3/13/2012 1:20:25 PM
PLEASE UPDATE THE PROJECTWISE PATH (SELECT ATTRIBUTES IN PROJECTWISE AND CLICK CHECK BOX)

REV. NO.	DATE	DRWN	CHKD	REMARKS

DESIGNED BY: R. KADAMBALA
DRAWN BY: B. CHAPMAN
SHEET CHK'D BY: J. HOFFMAN
CROSS CHK'D BY: I. POLEMATIDIS
APPROVED BY: J. LADNER
DATE: JULY 2013

CDM Smith
8381 Dix Ellis Trail, Suite 400
Jacksonville, Fl 32256
Tel: (904) 731-7109
FL COA NO. ED-0000020

CITY OF JACKSONVILLE

TRAIL RIDGE LANDFILL PHASES 6-14
CLASS 1 CELL EXPANSION

PHASE 6 TOP OF SUBGRADE GRADING PLAN

PROJECT NO. 9012-80695
FILE NAME: C008STPL
SHEET NO.
C-8

FOR PERMIT- NOT FOR CONSTRUCTION

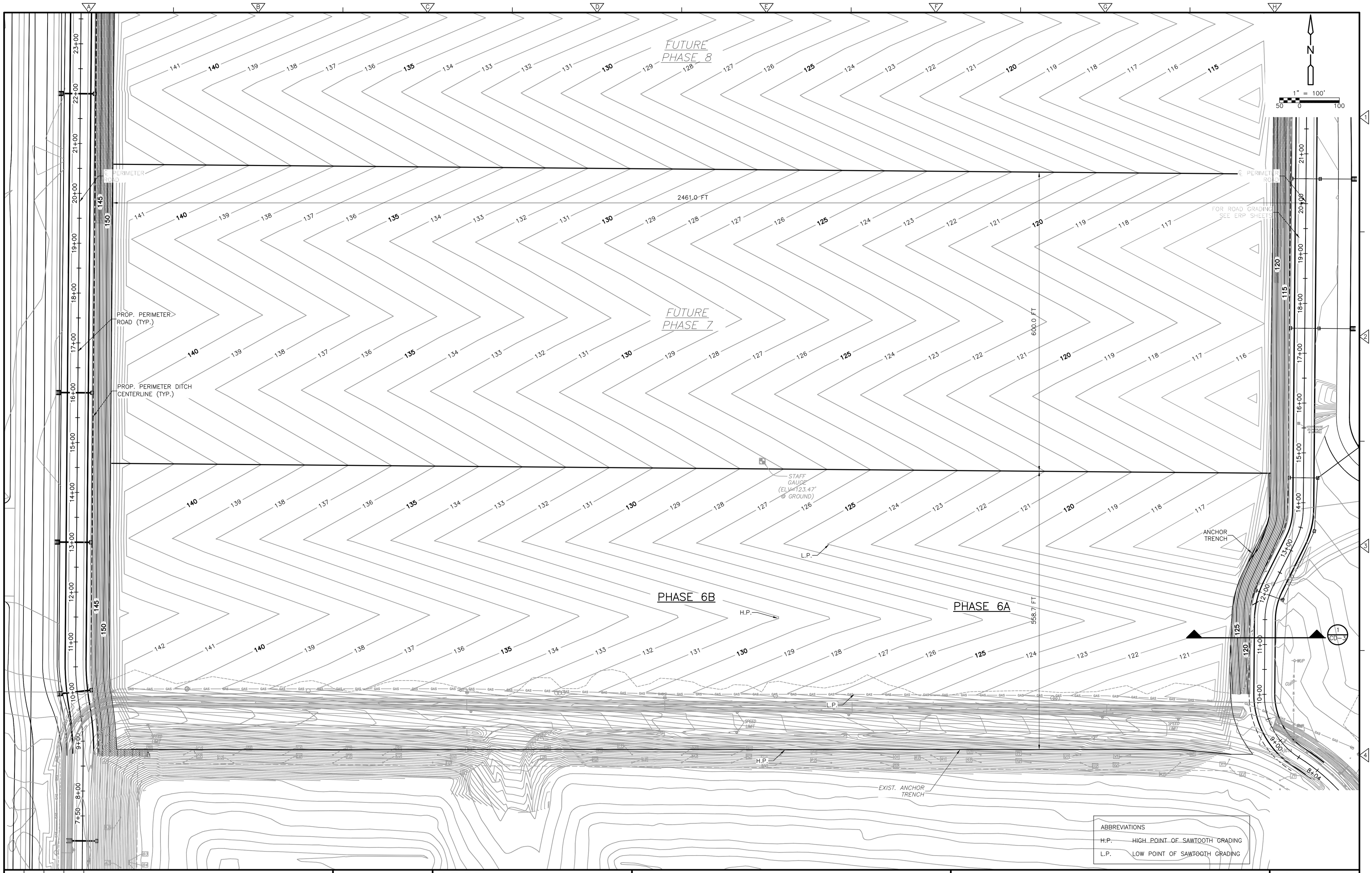

REV. NO.	DATE	DRWN	CHKD	REMARKS

DESIGNED BY: R. KADAMBALA
DRAWN BY: B. CHAPMAN
SHEET CHK'D BY: J. HOFFMAN
CROSS CHK'D BY: I. POLEMATIDIS
APPROVED BY: J. LADNER
DATE: JULY 2013

CDM Smith
8381 Dix Ellis Trail, Suite 400
Jacksonville, Fl 32256
Tel: (904) 731-7109
FL COA NO. ED-0000020

CITY OF JACKSONVILLE

TRAIL RIDGE LANDFILL PHASES 6-14
CLASS 1 CELL EXPANSION

PHASE 6 TOP OF FINISH GRADING PLAN

PROJECT NO. 9012-80695
FILE NAME: C009STPL
SHEET NO.
C-9

FOR PERMIT- NOT FOR CONSTRUCTION

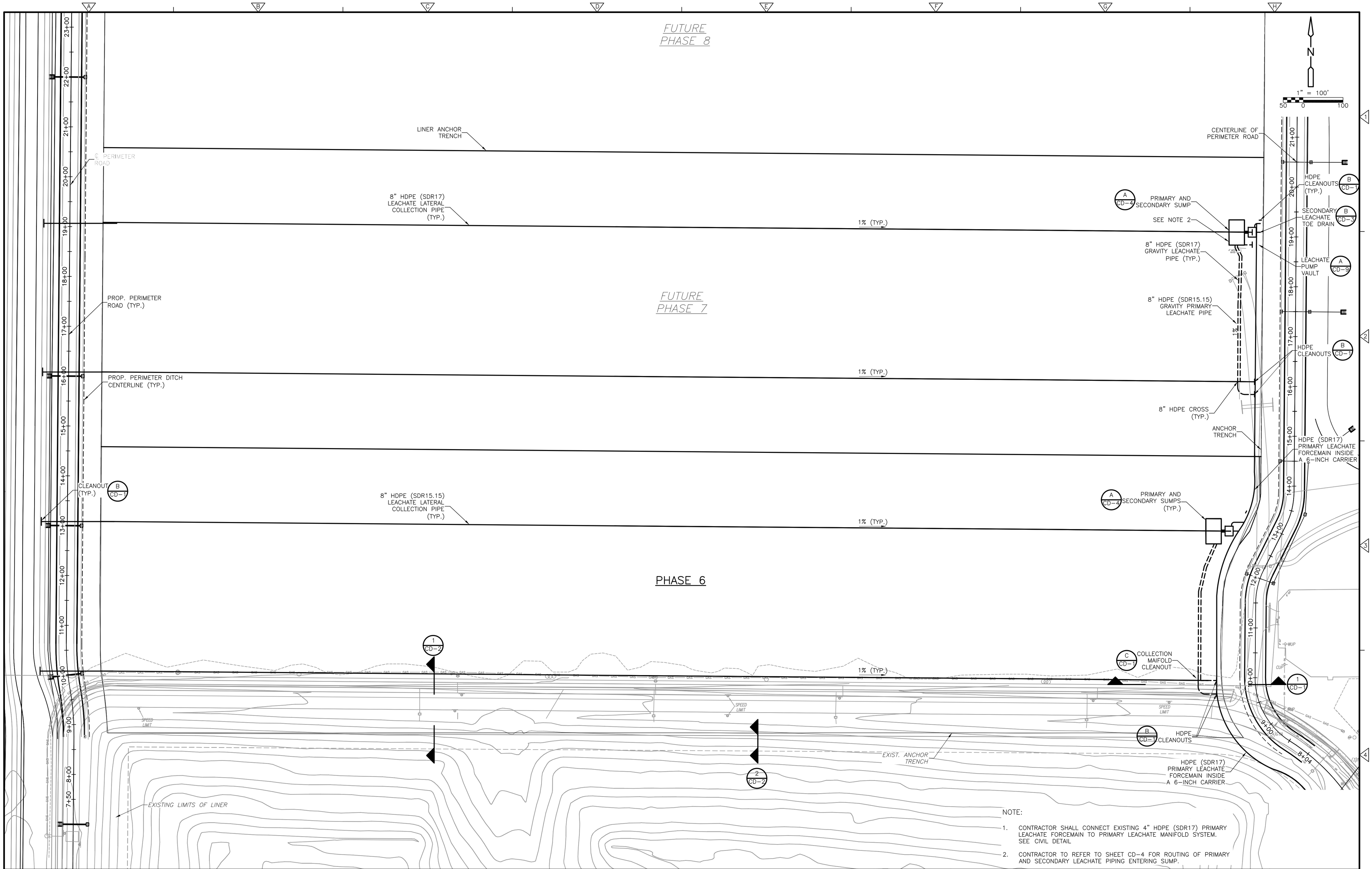

NOTE:

1. CONTRACTOR SHALL CONNECT EXISTING 4" HDPE (SDR17) PRIMARY LEACHATE FORCEMAIN TO PRIMARY LEACHATE MANIFOLD SYSTEM. SEE CIVIL DETAIL
2. CONTRACTOR TO REFER TO SHEET CD-4 FOR ROUTING OF PRIMARY AND SECONDARY LEACHATE PIPING ENTERING SUMP.

REV. NO.	DATE	DRWN	CHKD	REMARKS

DESIGNED BY: R. KADAMBALA
DRAWN BY: B. CHAPMAN
SHEET CHK'D BY: J. HOFFMAN
CROSS CHK'D BY: A. SALEH
APPROVED BY: J. LADNER
DATE: JULY 2013

CDM Smith
8381 Dix Ellis Trail, Suite 400
Jacksonville, Fl 32256
Tel: (904) 731-7109
FL COA NO. ED-0000020

CITY OF JACKSONVILLE

TRAIL RIDGE LANDFILL PHASES 6-14
CLASS 1 CELL EXPANSION

PHASE 6 LEACHATE COLLECTION PLAN

PROJECT NO. 9012-80695
FILE NAME: C010STPL

SHEET NO.
C-10

FOR PERMIT- NOT FOR CONSTRUCTION

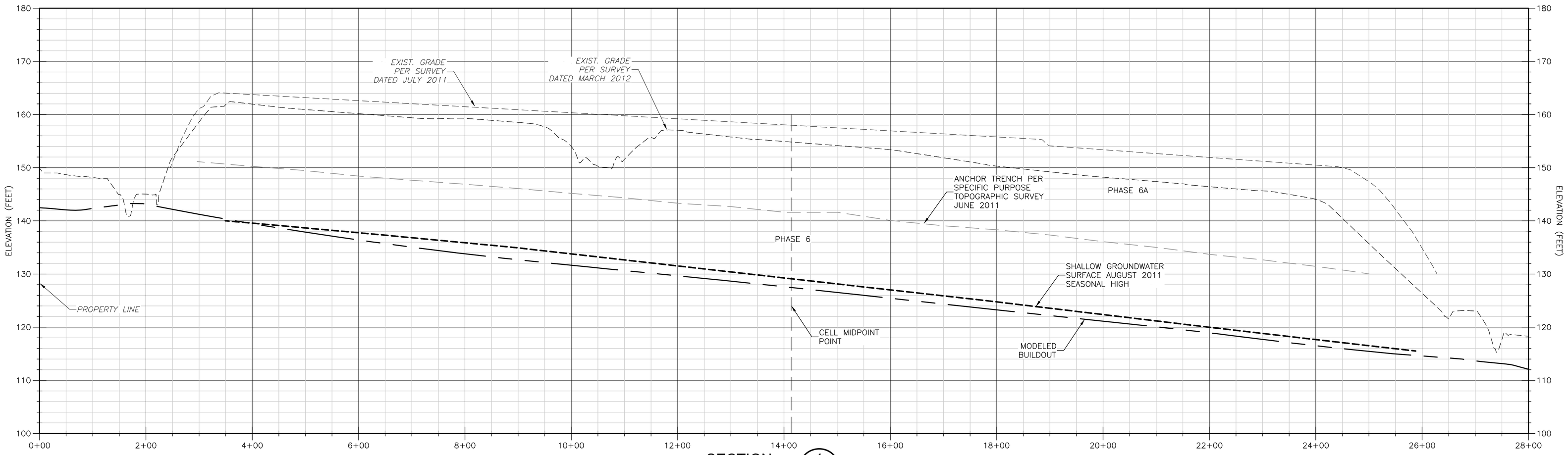

SECTION 1 (C-4)
1" = 100' HORIZ.
1" = 10' VERT.

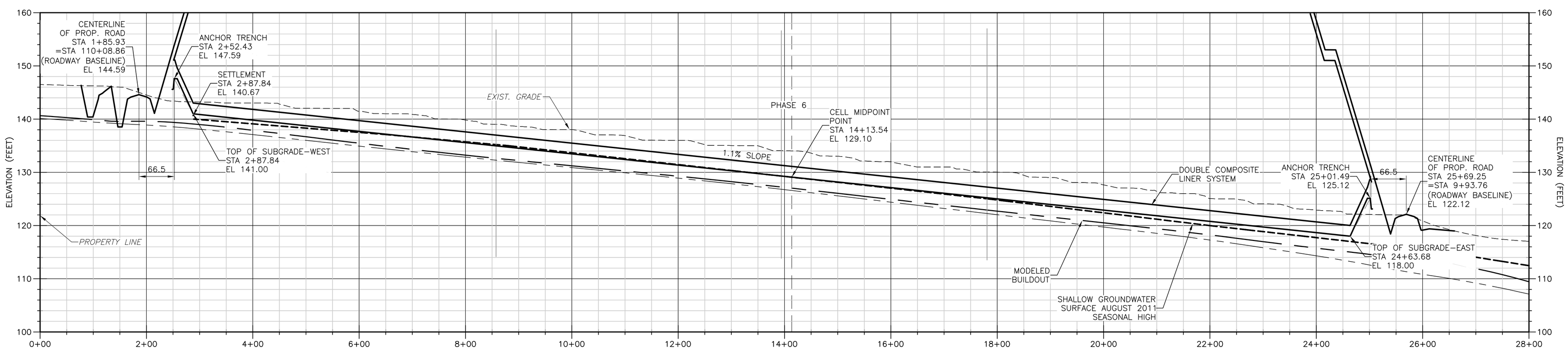

SECTION 2 (C-4)
1" = 100' HORIZ.
1" = 10' VERT.

LINER WEST TO LINER EAST IS 2178± FEET

LEGEND

- POST SETTLEMENT SLOPE
- MODELED BUILDOUT
- SHALLOW GROUNDWATER SURFACE ELEVATIONS
- PRE-LINER SEASONAL HIGH

NOTE:

1. STATIONING AS PER SHEET C-8
2. FOR LAYERING ON THE DOUBLE COMPOSITE LINER SYSTEM, SEE DETAIL A ON CD-1.

REV. NO.	DATE	DRWN	CHKD	REMARKS

DESIGNED BY: S. NEHRKE
DRAWN BY: C. SCOTT
SHEET CHK'D BY: J. HOFFMAN
CROSS CHK'D BY: J. LADNER
APPROVED BY: M. WHITE
DATE: JULY 2013

CDM Smith
8381 Dix Ellis Trail., Suite 400
Jacksonville, Fl 32256
Tel: (904) 731-7109
FL COA NO. ED-0000020

CITY OF JACKSONVILLE

TRAIL RIDGE LANDFILL PHASES 6-14
CLASS 1 CELL EXPANSION

SECTIONS - PHASES 6 & 7

PROJECT NO. 9012-80695
FILE NAME: C011SCTN.DWG
SHEET NO.
C-11

FOR PERMIT- NOT FOR CONSTRUCTION

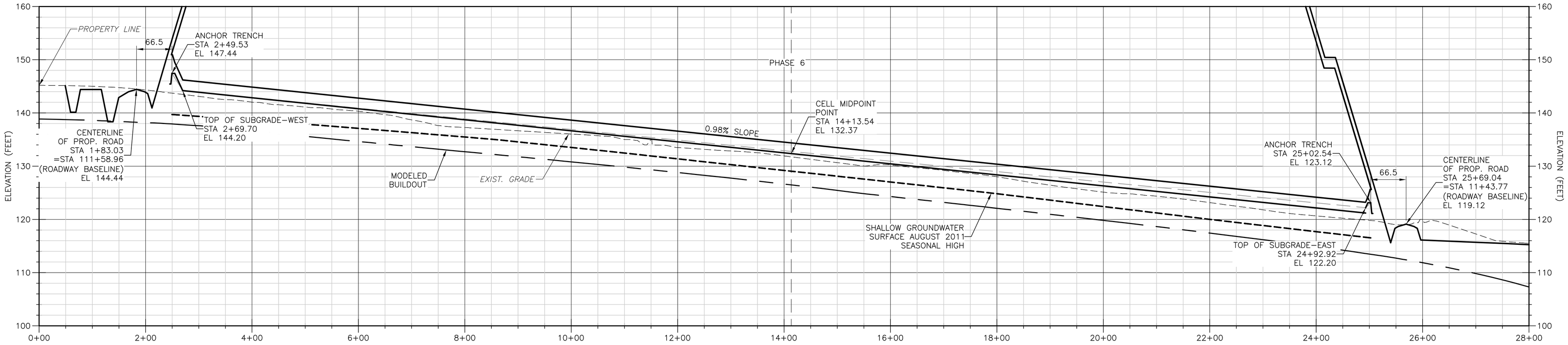

SECTION 3 / C-4

1" = 100' HORIZ.
1" = 10' VERT.

LINER WEST TO LINER EAST IS 2223± FEET

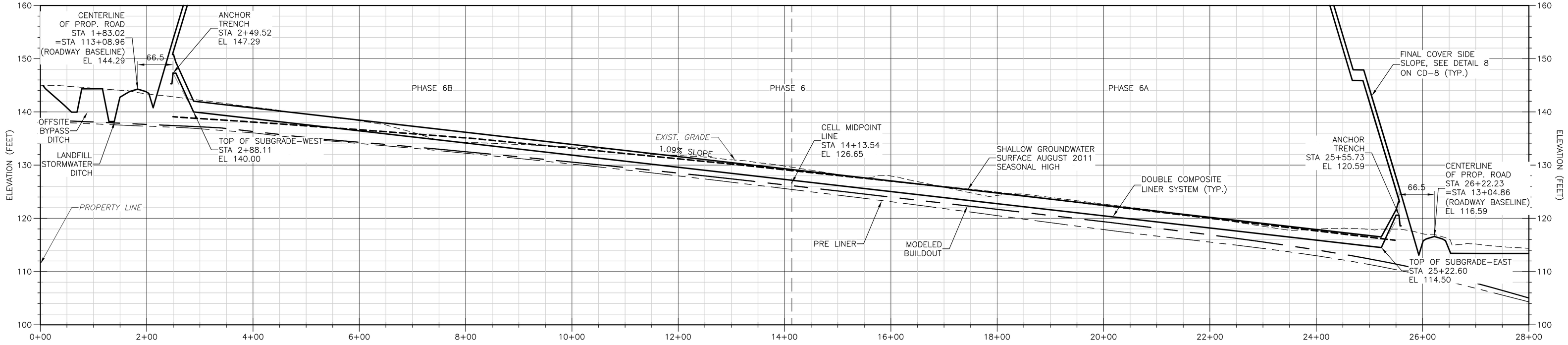

SECTION 4 / C-4

1" = 100' HORIZ.
1" = 10' VERT.

LINER WEST TO LINER EAST IS 2234± FEET

LEGEND

- POST SETTLEMENT SLOPE
- MODELED BUILDOUT
- SHALLOW GROUNDWATER SURFACE ELEVATIONS
- PRE-LINER SEASONAL HIGH

NOTE:

1. STATIONING AS PER SHEET C-8
2. FOR LAYERING ON THE DOUBLE COMPOSITE LINER SYSTEM, SEE DETAIL A ON CD-1.

REV. NO.	DATE	DRWN	CHKD	REMARKS

DESIGNED BY: S. NEHRKE
DRAWN BY: C. SCOTT
SHEET CHK'D BY: J. HOFFMAN
CROSS CHK'D BY: J. LADNER
APPROVED BY: M. WHITE
DATE: JULY 2013

CDM Smith
8381 Dix Ellis Trail, Suite 400
Jacksonville, Fl 32256
Tel: (904) 731-7109
FL COA NO. ED-0000020

CITY OF JACKSONVILLE

TRAIL RIDGE LANDFILL PHASES 6-14
CLASS 1 CELL EXPANSION

SECTIONS - PHASES 6 & 7

PROJECT NO. 9012-80695
FILE NAME: C012SCTN.DWG
SHEET NO.
C-12

FOR PERMIT- NOT FOR CONSTRUCTION

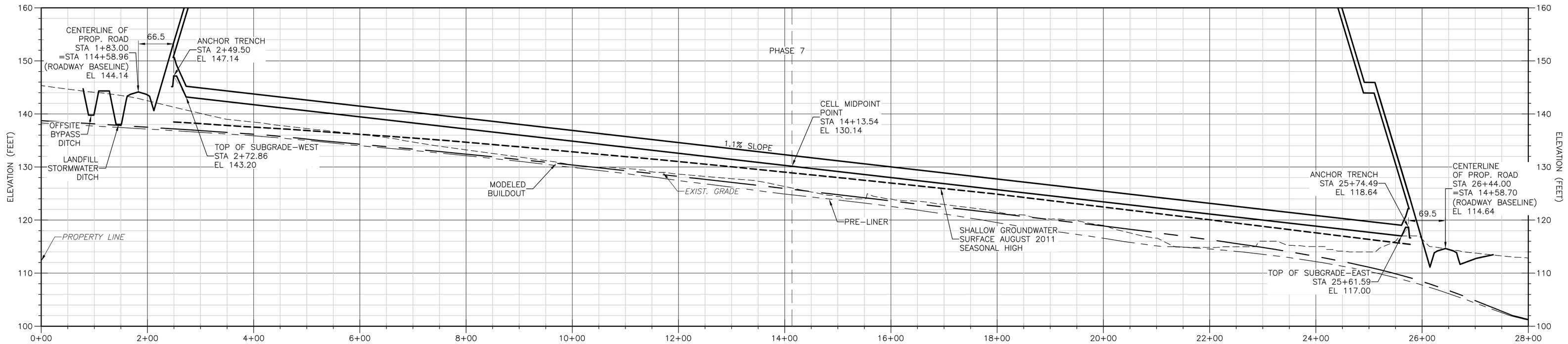

SECTION 5 / C-4

1" = 100' HORIZ.
1" = 10' VERT.

LINER WEST TO LINER EAST IS 2289± FEET

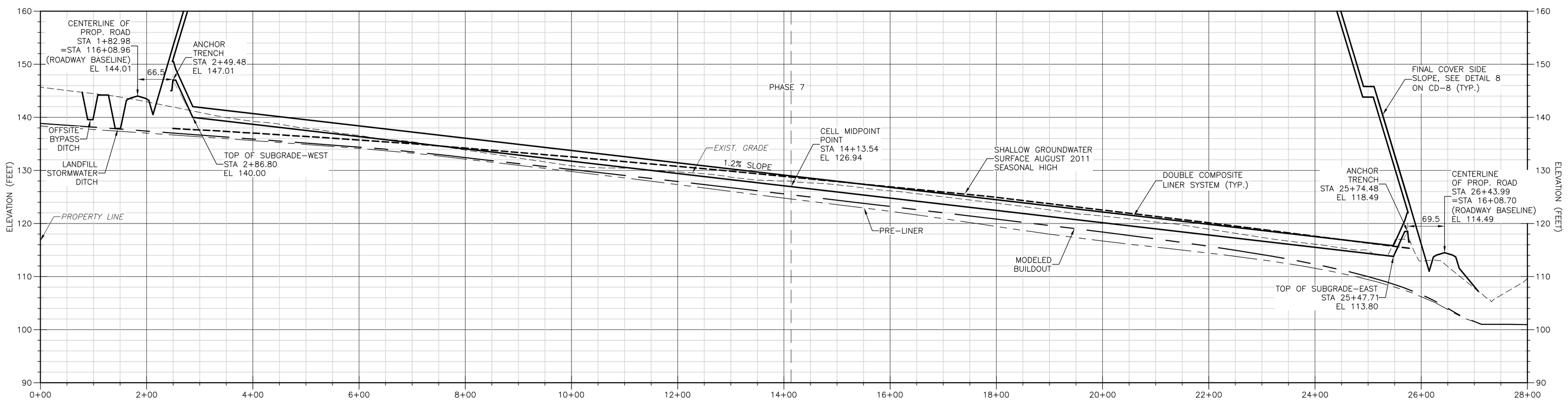

SECTION 6 / C-4

1" = 100' HORIZ.
1" = 10' VERT.

LINER WEST TO LINER EAST IS 2260± FEET

LEGEND

- POST SETTLEMENT SLOPE
- MODELED BUILDOUT
- SHALLOW GROUNDWATER SURFACE ELEVATIONS
- PRE-LINER SEASONAL HIGH

NOTE:

1. STATIONING AS PER SHEET C-8
2. FOR LAYERING ON THE DOUBLE COMPOSITE LINER SYSTEM, SEE DETAIL A ON CD-1.

REV. NO.	DATE	DRWN	CHKD	REMARKS

DESIGNED BY: S. NEHRKE
DRAWN BY: C. SCOTT
SHEET CHK'D BY: J. HOFFMAN
CROSS CHK'D BY: J. LADNER
APPROVED BY: M. WHITE
DATE: JULY 2013

CDM Smith
8381 Dix Ellis Trail, Suite 400
Jacksonville, Fl 32256
Tel: (904) 731-7109
FL COA NO. ED-0000020

CITY OF JACKSONVILLE

TRAIL RIDGE LANDFILL PHASES 6-14
CLASS 1 CELL EXPANSION

SECTIONS - PHASES 6 & 7

PROJECT NO. 9012-80695
FILE NAME: C013SCTN.DWG

SHEET NO.
C-13

FOR PERMIT- NOT FOR CONSTRUCTION

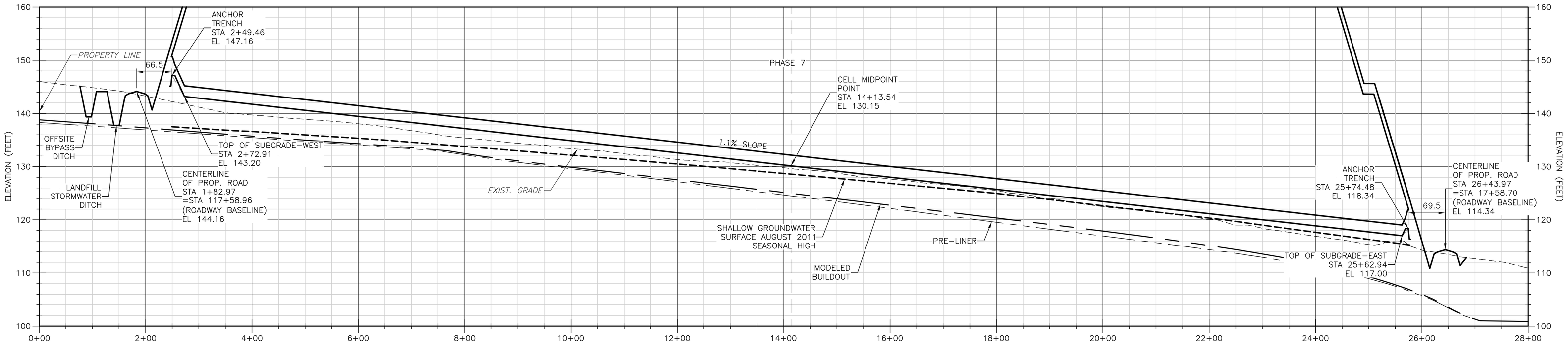

SECTION 7 / C-4

1" = 100' HORIZ.
1" = 10' VERT.

LINER WEST TO LINER EAST IS 2290± FEET

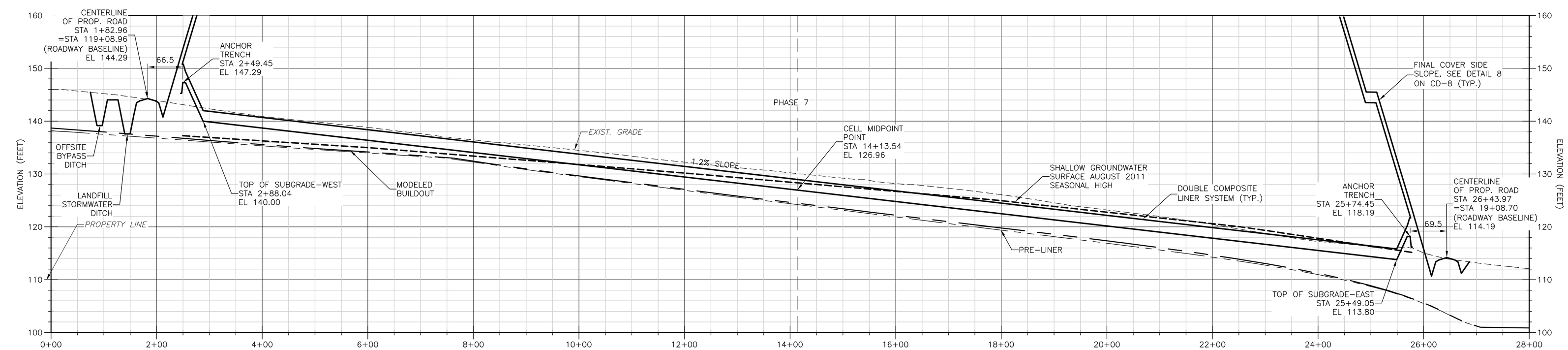

SECTION 8 / C-4

1" = 100' HORIZ.
1" = 10' VERT.

LINER WEST TO LINER EAST IS 2261± FEET

LEGEND

- POST SETTLEMENT SLOPE
- MODELED BUILDOUT
- SHALLOW GROUNDWATER SURFACE ELEVATIONS
- PRE-LINER SEASONAL HIGH

NOTE:

1. STATIONING AS PER SHEET C-8
2. FOR LAYERING ON THE DOUBLE COMPOSITE LINER SYSTEM, SEE DETAIL A ON CD-1.

REV. NO.	DATE	DRWN	CHKD	REMARKS

DESIGNED BY: S. NEHRKE
DRAWN BY: C. SCOTT
SHEET CHK'D BY: J. HOFFMAN
CROSS CHK'D BY: J. LADNER
APPROVED BY: M. WHITE
DATE: JULY 2013

CDM Smith
8381 Dix Ellis Trail., Suite 400
Jacksonville, Fl 32256
Tel: (904) 731-7109
FL COA NO. ED-0000020

CITY OF JACKSONVILLE

TRAIL RIDGE LANDFILL PHASES 6-14
CLASS 1 CELL EXPANSION

SECTIONS - PHASES 6 & 7

PROJECT NO. 9012-80695
FILE NAME: C014SCTN.DWG

SHEET NO.
C-14

FOR PERMIT- NOT FOR CONSTRUCTION

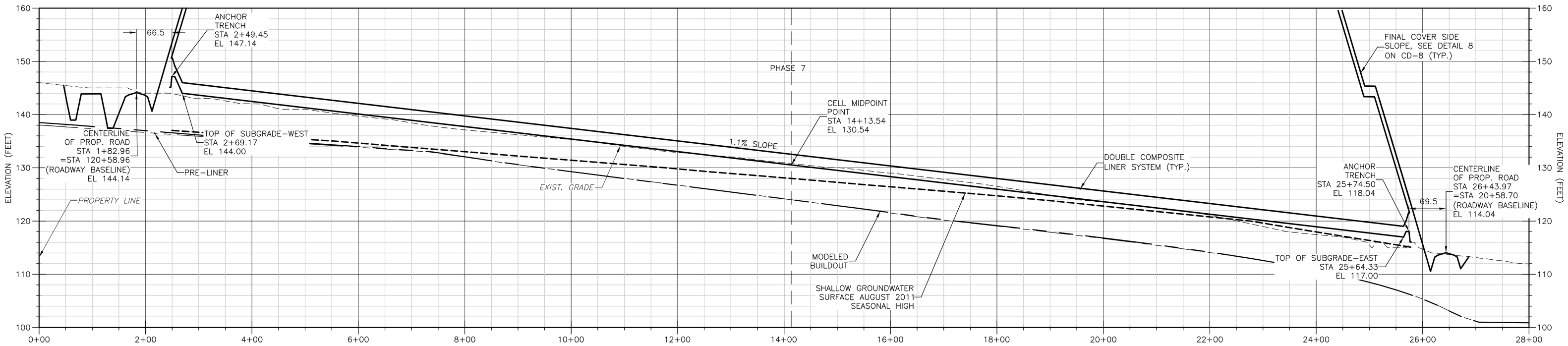

SECTION 9 / C-4

1" = 100' HORIZ.
1" = 10' VERT.

LINER WEST TO LINER EAST IS 2295± FEET

NOTE:

1. STATIONING AS PER SHEET C-8
2. FOR LAYERING ON THE DOUBLE COMPOSITE LINER SYSTEM, SEE DETAIL A ON CD-1.

LEGEND

- POST SETTLEMENT SLOPE
- MODELED BUILDOUT
- SHALLOW GROUNDWATER SURFACE ELEVATIONS
- PRE-LINER SEASONAL HIGH

REV. NO.	DATE	DRWN	CHKD	REMARKS

DESIGNED BY: R. KADAMBALA
DRAWN BY: B. CHAPMAN
SHEET CHK'D BY: J. HOFFMAN
CROSS CHK'D BY: Y. POLEMATIDIS
APPROVED BY: M. WHITE
DATE: JULY 2013

CDM Smith
8381 Dix Ellis Trail., Suite 400
Jacksonville, Fl 32256
Tel: (904) 731-7109
FL COA NO. ED-0000020

CITY OF JACKSONVILLE

TRAIL RIDGE LANDFILL PHASES 6-14
CLASS 1 CELL EXPANSION

SECTIONS - PHASES 7 & 8

PROJECT NO. 9012-80695
FILE NAME: C015SCTN.DWG
SHEET NO. C-15

FOR PERMIT- NOT FOR CONSTRUCTION

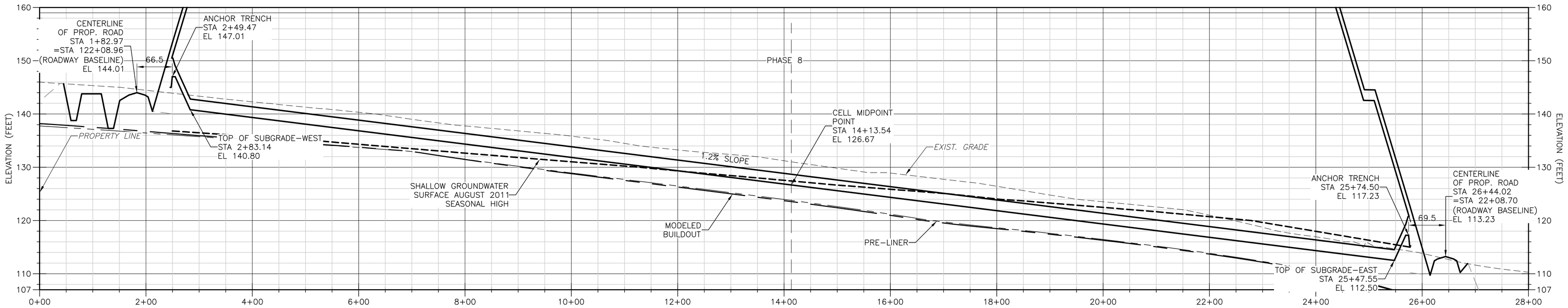

SECTION 10 / C-4
1" = 100' HORIZ.
1" = 10' VERT.
LINER WEST TO LINER EAST IS 2291± FEET

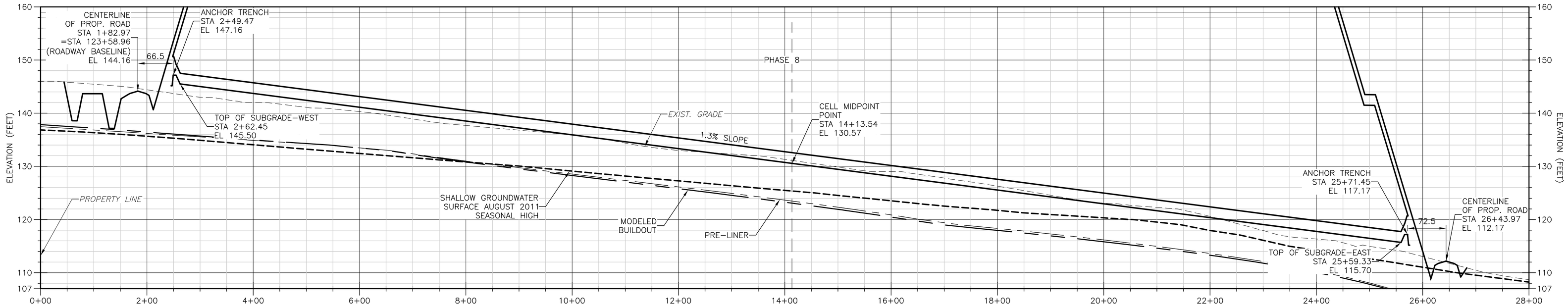

SECTION 11 / C-4
1" = 100' HORIZ.
1" = 10' VERT.
LINER WEST TO LINER EAST IS 2322± FEET

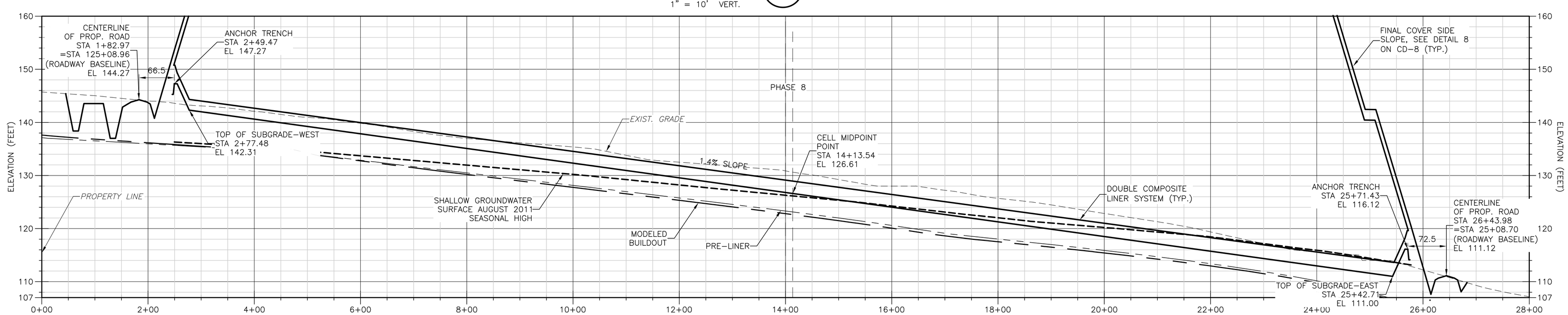

SECTION 12 / C-4
1" = 100' HORIZ.
1" = 10' VERT.
LINER WEST TO LINER EAST IS 2293± FEET

NOTE:

1. STATIONING AS PER SHEET C-8
2. FOR LAYERING ON THE DOUBLE COMPOSITE LINER SYSTEM, SEE DETAIL A ON CD-1.

LEGEND

- POST SETTLEMENT SLOPE
- MODELED BUILDOUT
- SHALLOW GROUNDWATER SURFACE ELEVATIONS
- PRE-LINER SEASONAL HIGH

REV. NO.	DATE	DRWN	CHKD	REMARKS

DESIGNED BY: R. KADAMBALA
DRAWN BY: B. CHAPMAN
SHEET CHK'D BY: J. HOFFMAN
CROSS CHK'D BY: I. POLEMATIDIS
APPROVED BY: J. LADNER
DATE: JULY 2013

CDM Smith
8381 Dix Ellis Trail., Suite 400
Jacksonville, Fl 32256
Tel: (904) 731-7109
FL COA NO. ED-0000020

CITY OF JACKSONVILLE

TRAIL RIDGE LANDFILL PHASES 6-14
CLASS 1 CELL EXPANSION

SECTIONS - PHASE 8

PROJECT NO. 9012-80695
FILE NAME: C016SCTN.DWG
SHEET NO.
C-16

FOR PERMIT- NOT FOR CONSTRUCTION

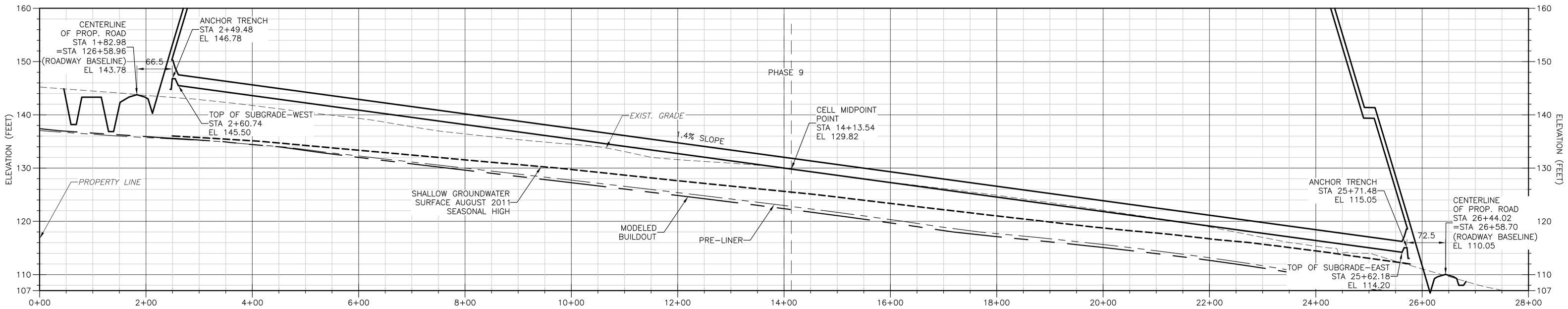

SECTION 13 (C-4)
1" = 100' HORIZ.
1" = 10' VERT.
LINER WEST TO LINER EAST IS 2311± FEET

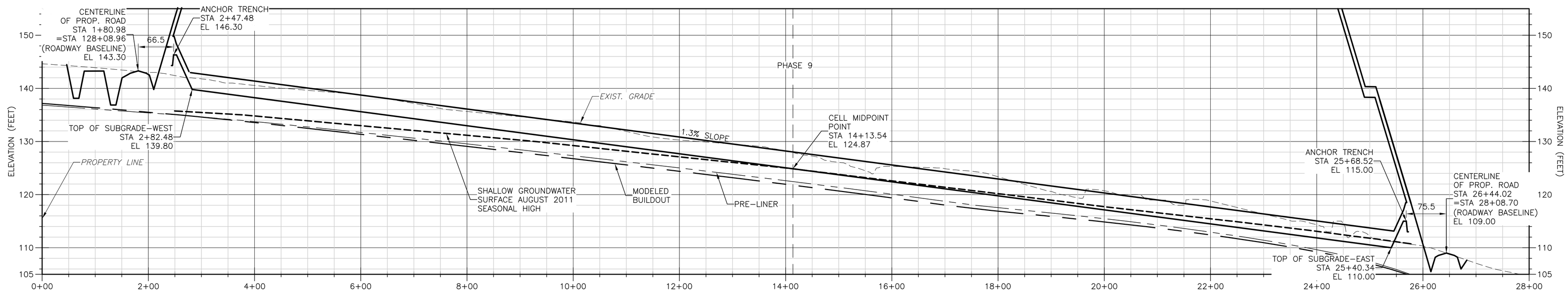

SECTION 14 (C-4)
1" = 100' HORIZ.
1" = 10' VERT.
LINER WEST TO LINER EAST IS 2261± FEET

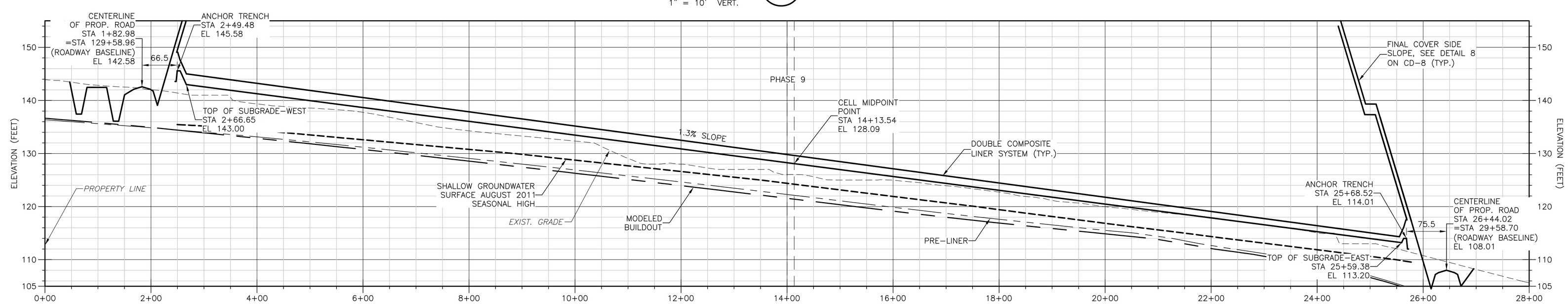

SECTION 15 (C-4)
1" = 100' HORIZ.
1" = 10' VERT.
LINER WEST TO LINER EAST IS 2296± FEET

NOTE:

1. STATIONING AS PER SHEET C-8
2. FOR LAYERING ON THE DOUBLE COMPOSITE LINER SYSTEM, SEE DETAIL A ON CD-1.

LEGEND

- POST SETTLEMENT SLOPE
- MODELED BUILDOUT
- SHALLOW GROUNDWATER SURFACE ELEVATIONS
- PRE-LINER SEASONAL HIGH

REV. NO.	DATE	DRWN	CHKD	REMARKS

DESIGNED BY: R. KADAMBALA
DRAWN BY: B. CHAPMAN
SHEET CHK'D BY: J. HOFFMAN
CROSS CHK'D BY: I. POLEMATIDIS
APPROVED BY: J. LADNER
DATE: JULY 2013

CDM Smith
8381 Dix Ellis Trail, Suite 400
Jacksonville, Fl 32256
Tel: (904) 731-7109
FL COA NO. ED-0000020

CITY OF JACKSONVILLE

TRAIL RIDGE LANDFILL PHASES 6-14
CLASS 1 CELL EXPANSION

SECTIONS - PHASE 9

PROJECT NO. 9012-80695
FILE NAME: C017SCTN.DWG
SHEET NO.
C-17

FOR PERMIT- NOT FOR CONSTRUCTION

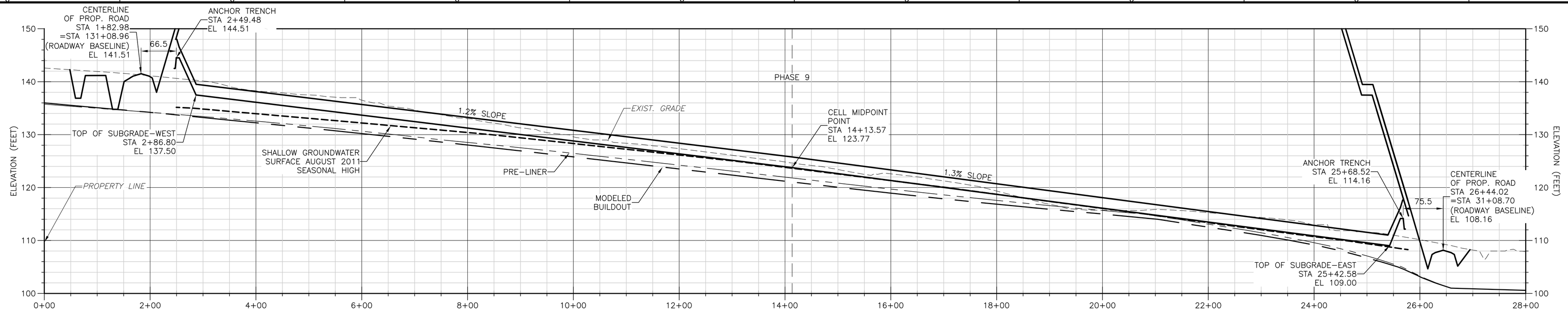

SECTION 16 / C-4

1" = 100' HORIZ.
1" = 10' VERT.

LINER WEST TO LINER EAST IS 2256± FEET

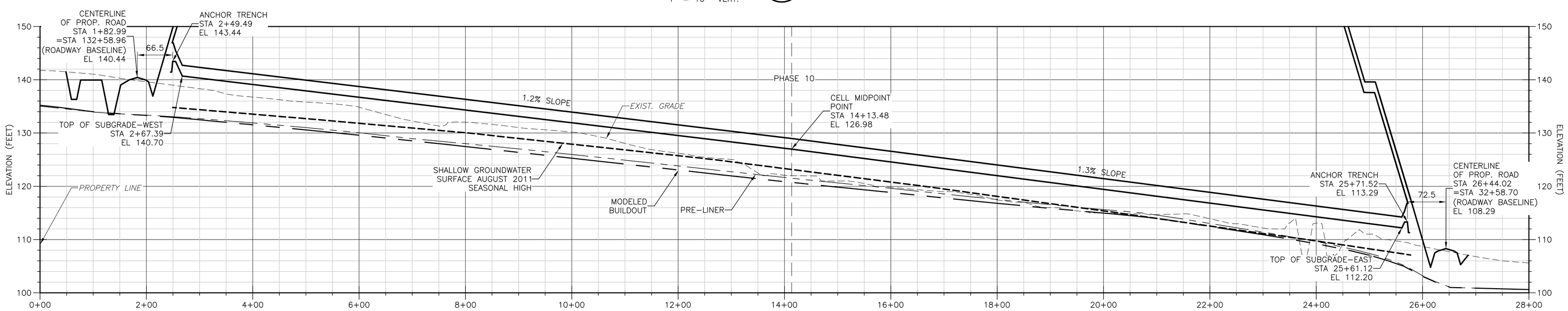

SECTION 17 / C-4

1" = 100' HORIZ.
1" = 10' VERT.

LINER WEST TO LINER EAST IS 2297± FEET

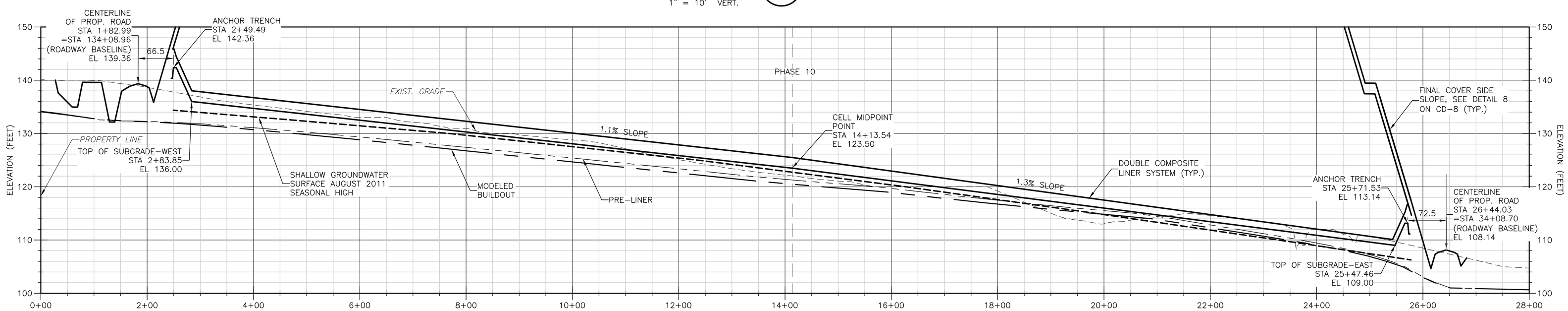

SECTION 18 / C-4

1" = 100' HORIZ.
1" = 10' VERT.

LINER WEST TO LINER EAST IS 2266± FEET

NOTE:

1. STATIONING AS PER SHEET C-8
2. FOR LAYERING ON THE DOUBLE COMPOSITE LINER SYSTEM, SEE DETAIL A ON CD-1.

LEGEND

- POST SETTLEMENT SLOPE
- MODELED BUILDOUT
- SHALLOW GROUNDWATER SURFACE ELEVATIONS
- PRE-LINER SEASONAL HIGH

REV. NO.	DATE	DRWN	CHKD	REMARKS

DESIGNED BY: R. KADAMBALA
DRAWN BY: B. CHAPMAN
SHEET CHK'D BY: J. HOFFMAN
CROSS CHK'D BY: I. POLEMATIDIS
APPROVED BY: J. LADNER
DATE: JULY 2013

CDM Smith
8381 Dix Ellis Trail, Suite 400
Jacksonville, Fl 32256
Tel: (904) 731-7109
FL COA NO. ED-0000020

CITY OF JACKSONVILLE

TRAIL RIDGE LANDFILL PHASES 6-14
CLASS 1 CELL EXPANSION

SECTIONS - PHASES 9 & 10

PROJECT NO. 9012-80695
FILE NAME: C018SCTN.DWG
SHEET NO.
C-18

FOR PERMIT- NOT FOR CONSTRUCTION

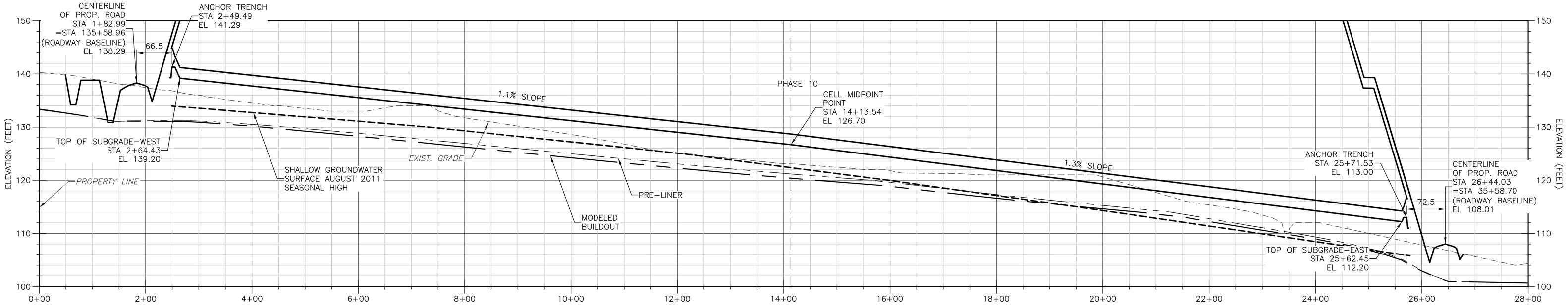

SECTION 19 (C-4)
1" = 10' VERT.
1" = 100' HORIZ.
LINER WEST TO LINER EAST IS 2301± FEET

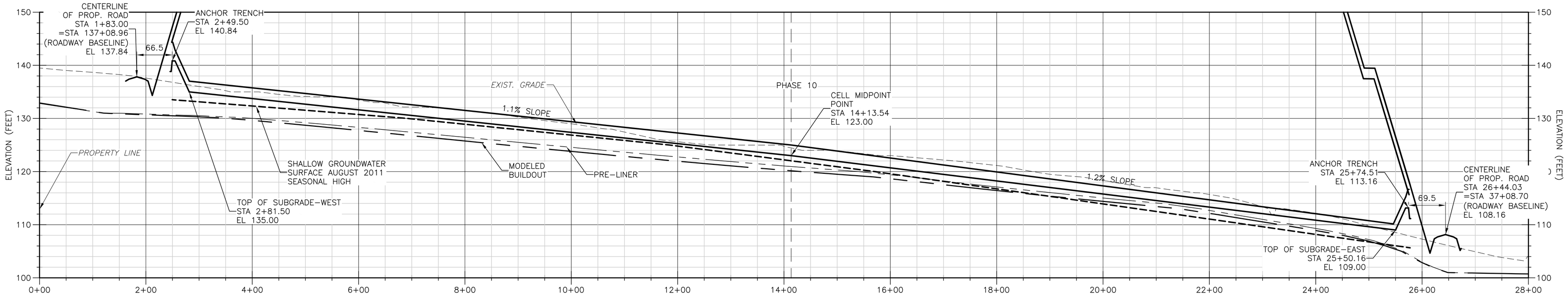

SECTION 20 (C-4)
1" = 10' VERT.
1" = 100' HORIZ.
LINER WEST TO LINER EAST IS 2269± FEET

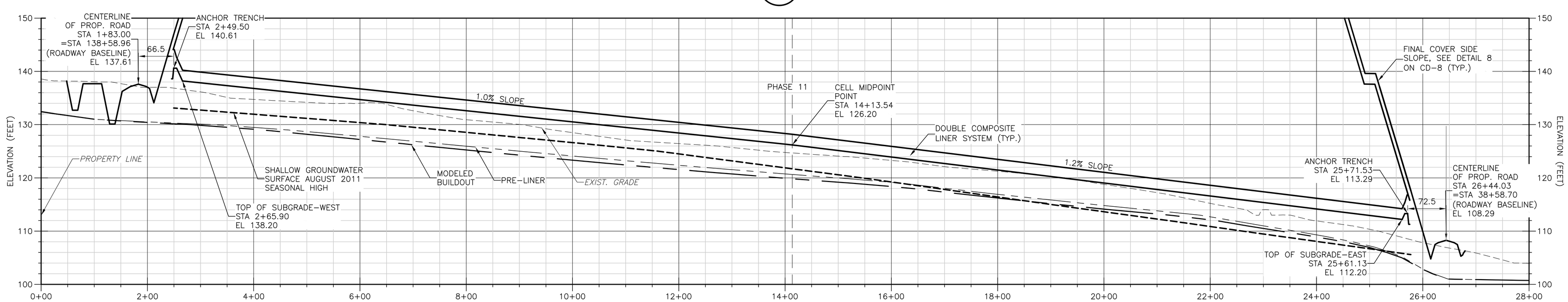

SECTION 21 (C-4)
1" = 100' HORIZ.
1" = 10' VERT.
LINER WEST TO LINER EAST IS 2298± FEET

NOTE:

1. STATIONING AS PER SHEET C-8
2. FOR LAYERING ON THE DOUBLE COMPOSITE LINER SYSTEM, SEE DETAIL A ON CD-1.

LEGEND

- POST SETTLEMENT SLOPE
- MODELED BUILDOUT
- SHALLOW GROUNDWATER SURFACE ELEVATIONS
- PRE-LINER SEASONAL HIGH

REV. NO.	DATE	DRWN	CHKD	REMARKS

DESIGNED BY: R. KADAMBALA
DRAWN BY: B. CHAPMAN
SHEET CHK'D BY: J. HOFFMAN
CROSS CHK'D BY: I. POLEMATIDIS
APPROVED BY: J. LADNER
DATE: JULY 2013

CDM Smith
8381 Dix Ellis Trail, Suite 400
Jacksonville, Fl 32256
Tel: (904) 731-7109
FL COA NO. ED-0000020

CITY OF JACKSONVILLE

TRAIL RIDGE LANDFILL PHASES 6-14
CLASS 1 CELL EXPANSION

SECTIONS - PHASES 10 & 11

PROJECT NO. 9012-80695
FILE NAME: C019SCTN.DWG
SHEET NO.
C-19

FOR PERMIT- NOT FOR CONSTRUCTION

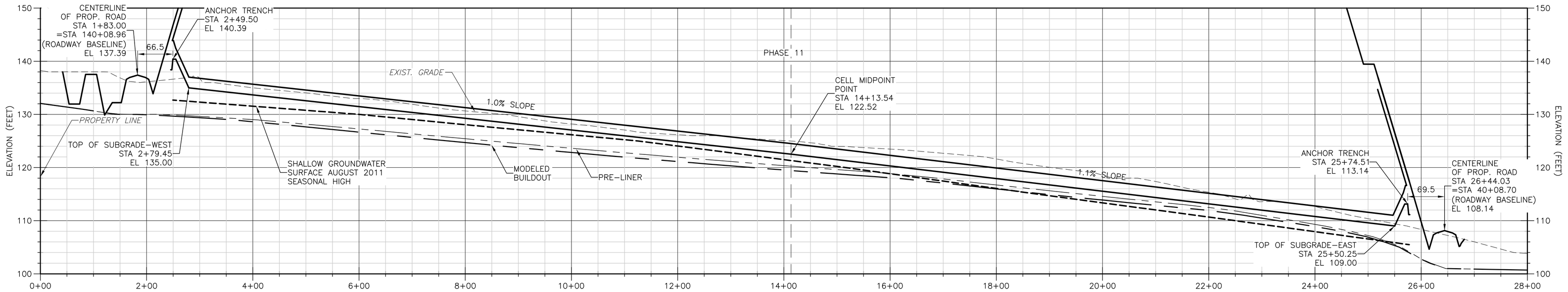

SECTION 22 C-4
1" = 100' HORIZ.
1" = 10' VERT.
LINER WEST TO LINER EAST IS 2271± FEET

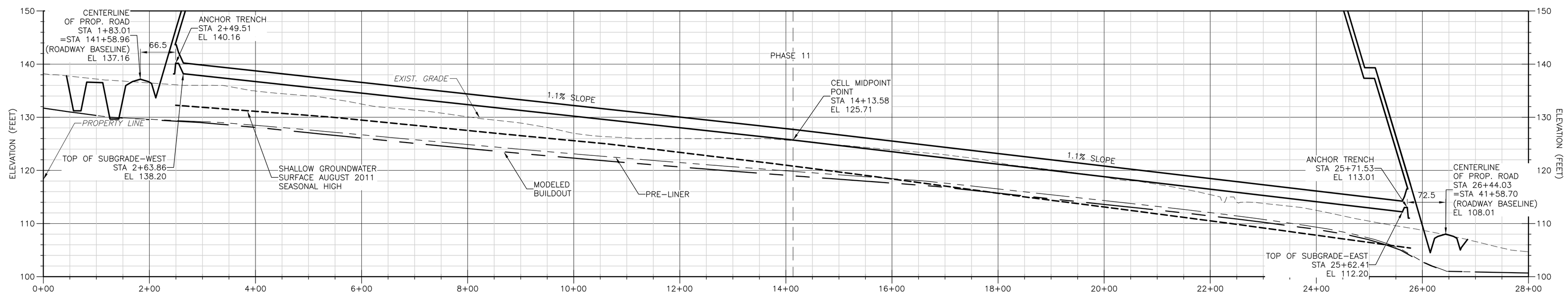

SECTION 23 C-4
1" = 100' HORIZ.
1" = 10' VERT.
LINER WEST TO LINER EAST IS 2302± FEET

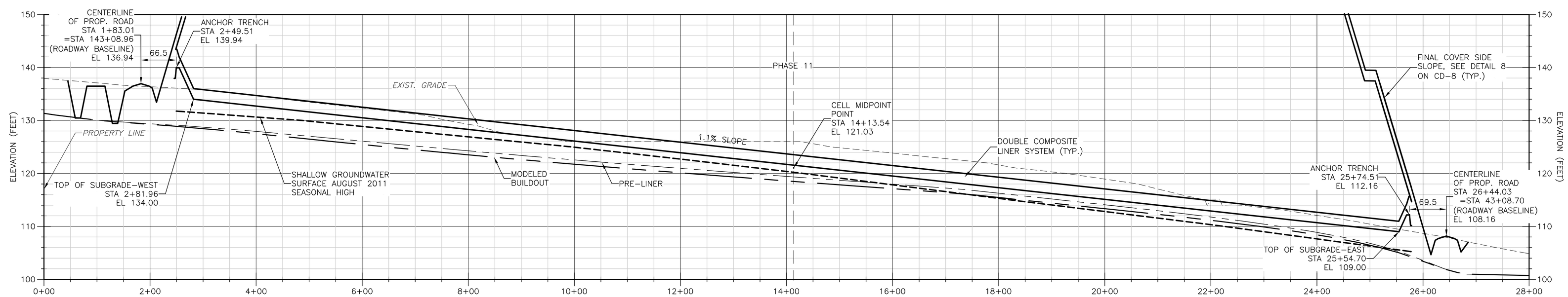

SECTION 24 C-4
1" = 100' HORIZ.
1" = 10' VERT.
LINER WEST TO LINER EAST IS 2268± FEET

LEGEND

- POST SETTLEMENT SLOPE
- MODELED BUILDOUT
- SHALLOW GROUNDWATER SURFACE ELEVATIONS
- PRE-LINER SEASONAL HIGH

REV. NO.	DATE	DRWN	CHKD	REMARKS

DESIGNED BY: R. KADAMBALA
DRAWN BY: B. CHAPMAN
SHEET CHK'D BY: J. HOFFMAN
CROSS CHK'D BY: I. POLEMATIDIS
APPROVED BY: J. LADNER
DATE: JULY 2013

CDM Smith
8381 Dix Ellis Trail., Suite 400
Jacksonville, Fl 32256
Tel: (904) 731-7109
FL COA NO. ED-0000020

CITY OF JACKSONVILLE

TRAIL RIDGE LANDFILL PHASES 6-14
CLASS 1 CELL EXPANSION

SECTIONS - PHASE 11

PROJECT NO. 9012-80695
FILE NAME: C020SCTN.DWG
SHEET NO.
C-20

FOR PERMIT- NOT FOR CONSTRUCTION

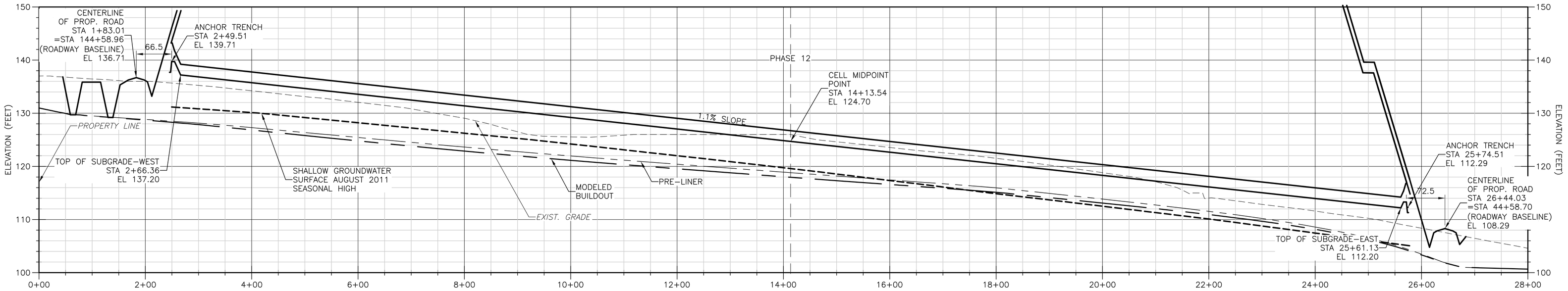

SECTION 25 / C-4
1" = 100' HORIZ.
1" = 10' VERT.
LINER WEST TO LINER EAST IS 2298± FEET

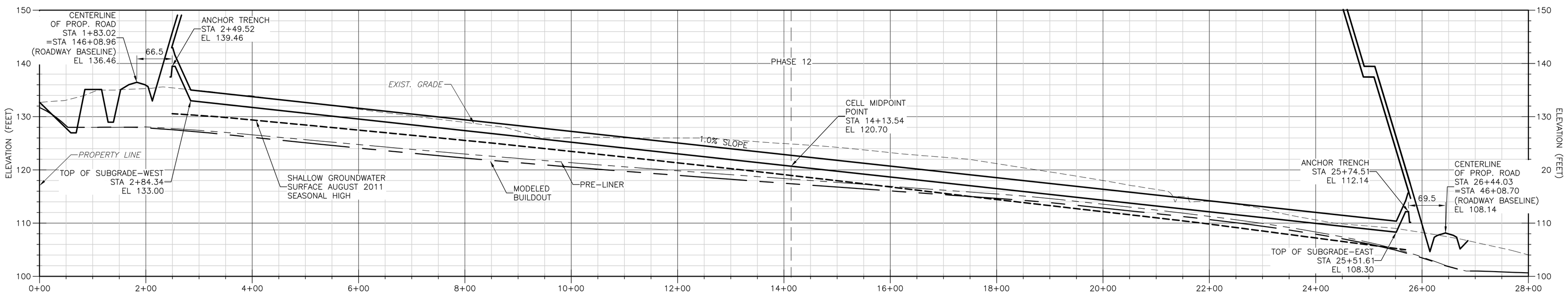

SECTION 26 / C-4
1" = 100' HORIZ.
1" = 10' VERT.
LINER WEST TO LINER EAST IS 2263± FEET

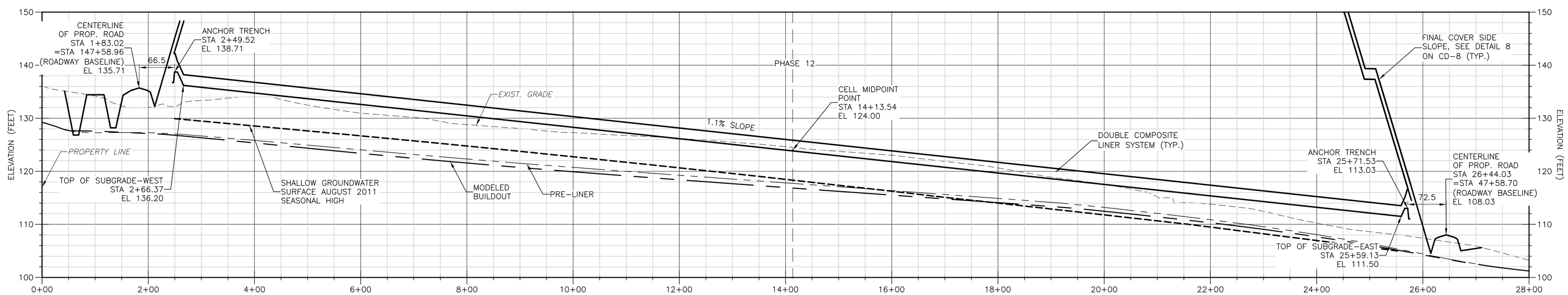

SECTION 27 / C-4
1" = 100' HORIZ.
1" = 10' VERT.
LINER WEST TO LINER EAST IS 2296± FEET

LEGEND

- POST SETTLEMENT SLOPE
- MODELED BUILDOUT
- SHALLOW GROUNDWATER SURFACE ELEVATIONS
- PRE-LINER SEASONAL HIGH

REV. NO.	DATE	DRWN	CHKD	REMARKS

DESIGNED BY: R. KADAMBALA
DRAWN BY: B. CHAPMAN
SHEET CHK'D BY: J. HOFFMAN
CROSS CHK'D BY: I. POLEMATIDIS
APPROVED BY: J. LADNER
DATE: JULY 2013

CDM Smith
8381 Dix Ellis Trail, Suite 400
Jacksonville, Fl 32256
Tel: (904) 731-7109
FL COA NO. ED-0000020

CITY OF JACKSONVILLE

TRAIL RIDGE LANDFILL PHASES 6-14
CLASS 1 CELL EXPANSION

SECTIONS - PHASE 12

PROJECT NO. 9012-80695
FILE NAME: C021SCTN.DWG
SHEET NO.
C-21

FOR PERMIT- NOT FOR CONSTRUCTION

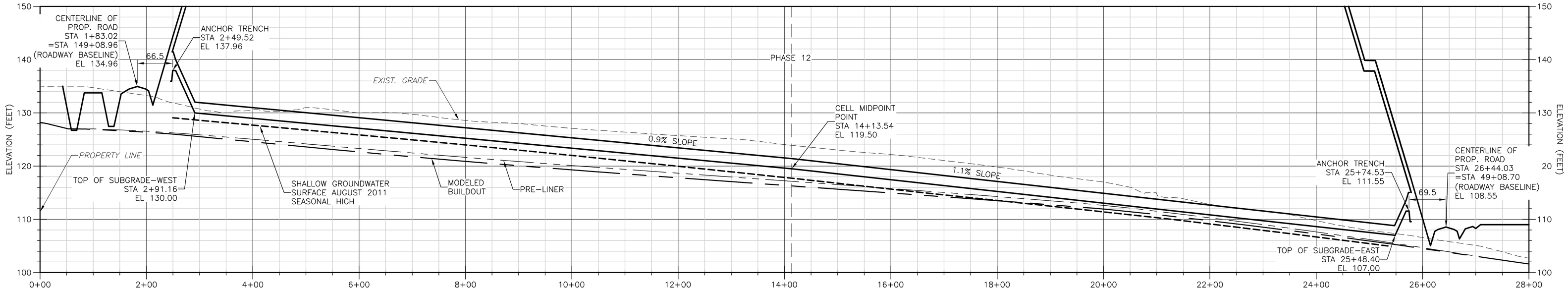

SECTION 28 (C-4)
1" = 100' HORIZ.
1" = 10' VERT.
LINER WEST TO LINER EAST IS 2256± FEET

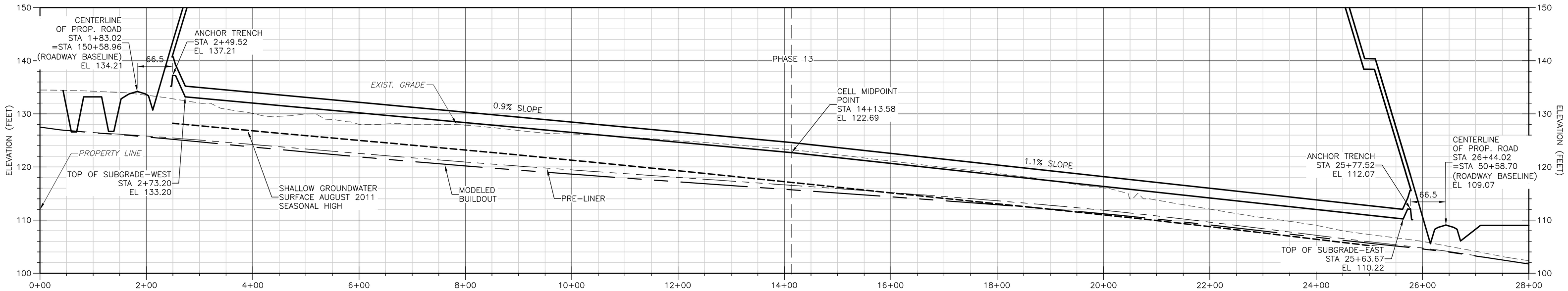

SECTION 29 (C-4)
1" = 100' HORIZ.
1" = 10' VERT.
LINER WEST TO LINER EAST IS 2286± FEET

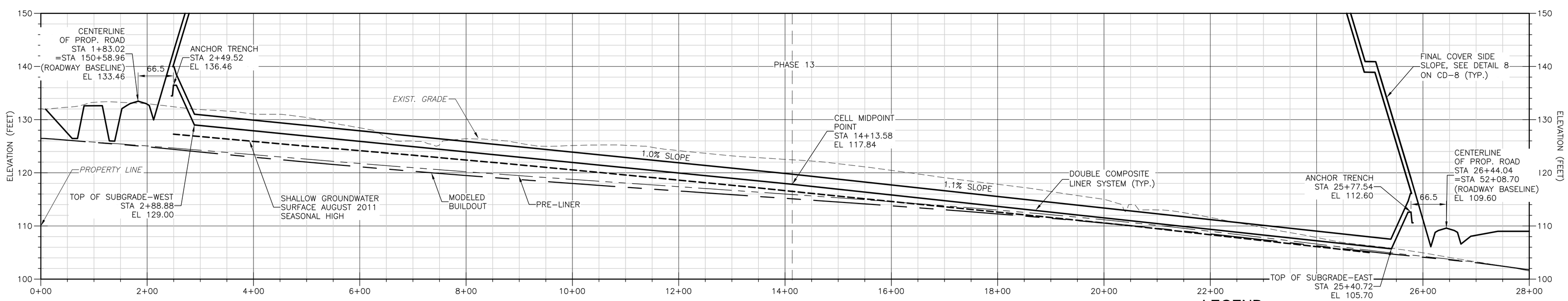

SECTION 30 (C-4)
1" = 100' HORIZ.
1" = 10' VERT.
LINER WEST TO LINER EAST IS 2247± FEET

NOTE:

1. STATIONING AS PER SHEET C-8
2. FOR LAYERING ON THE DOUBLE COMPOSITE LINER SYSTEM, SEE DETAIL A ON CD-1.

LEGEND

- POST SETTLEMENT SLOPE
- MODELED BUILDOUT
- SHALLOW GROUNDWATER SURFACE ELEVATIONS
- PRE-LINER SEASONAL HIGH

REV. NO.	DATE	DRWN	CHKD	REMARKS

DESIGNED BY: R. KADAMBALA
DRAWN BY: B. CHAPMAN
SHEET CHK'D BY: J. HOFFMAN
CROSS CHK'D BY: I. POLEMATIDIS
APPROVED BY: J. LADNER
DATE: JULY 2013

CDM Smith
8381 Dix Ellis Trail, Suite 400
Jacksonville, Fl 32256
Tel: (904) 731-7109
FL COA NO. ED-0000020

CITY OF JACKSONVILLE

TRAIL RIDGE LANDFILL PHASES 6-14
CLASS 1 CELL EXPANSION

SECTIONS - PHASES 12 & 13

PROJECT NO. 9012-80695
FILE NAME: C022SCTN.DWG
SHEET NO.
C-22

FOR PERMIT- NOT FOR CONSTRUCTION

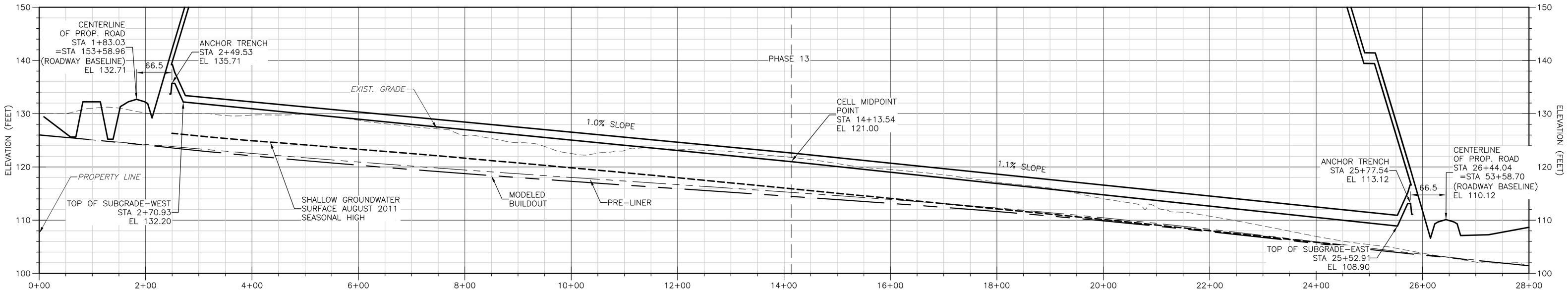

SECTION 31 / C-4
1" = 100' HORIZ.
1" = 10' VERT.
LINER WEST TO LINER EAST IS 2277± FEET

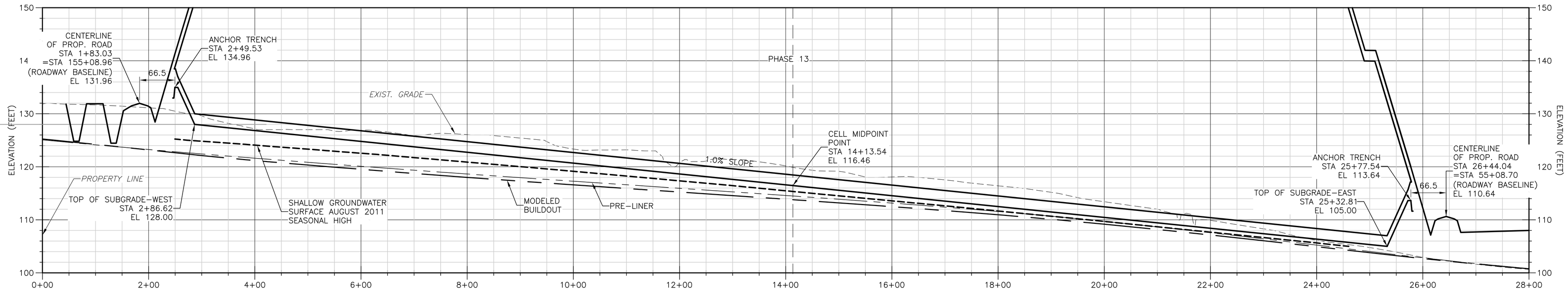

SECTION 32 / C-4
1" = 100' HORIZ.
1" = 10' VERT.
LINER WEST TO LINER EAST IS 2242± FEET

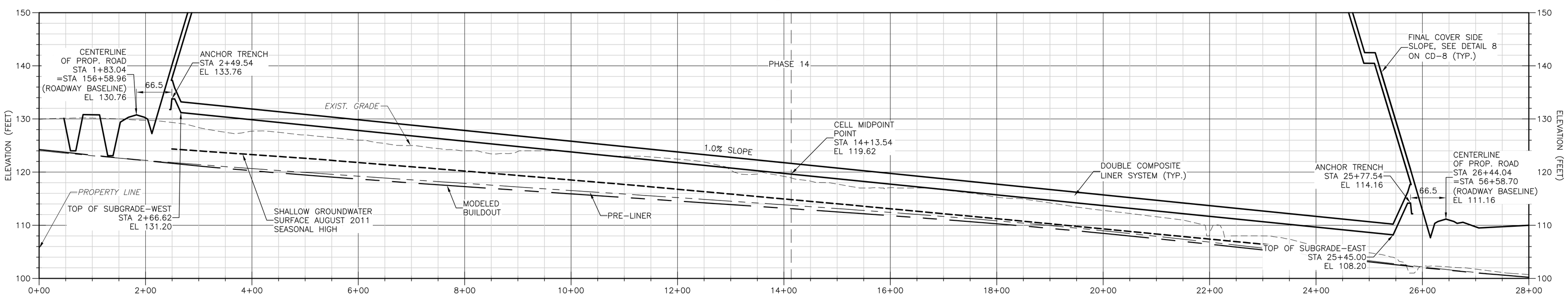

SECTION 33 / C-4
1" = 100' HORIZ.
1" = 10' VERT.
LINER WEST TO LINER EAST IS 2273± FEET

NOTE:

1. STATIONING AS PER SHEET C-8
2. FOR LAYERING ON THE DOUBLE COMPOSITE LINER SYSTEM, SEE DETAIL A ON CD-1.

LEGEND

- POST SETTLEMENT SLOPE
- MODELED BUILDOUT
- SHALLOW GROUNDWATER SURFACE ELEVATIONS
- PRE-LINER SEASONAL HIGH

REV. NO.	DATE	DRWN	CHKD	REMARKS

DESIGNED BY: R. KADAMBALA
DRAWN BY: B. CHAPMAN
SHEET CHK'D BY: J. HOFFMAN
CROSS CHK'D BY: I. POLEMATIDIS
APPROVED BY: J. LADNER
DATE: JULY 2013

CDM Smith
8381 Dix Ellis Trail., Suite 400
Jacksonville, Fl 32256
Tel: (904) 731-7109
FL COA NO. ED-0000020

CITY OF JACKSONVILLE

TRAIL RIDGE LANDFILL PHASES 6-14
CLASS 1 CELL EXPANSION

SECTIONS - PHASES 13 & 14

PROJECT NO. 9012-80695
FILE NAME: C023SCTN.DWG
SHEET NO. C-23

FOR PERMIT- NOT FOR CONSTRUCTION

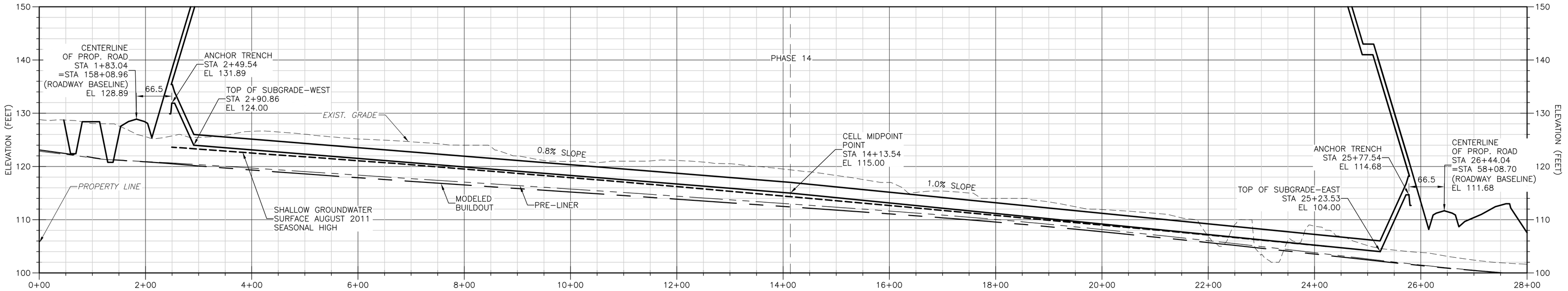

SECTION 34 (C-4)
1" = 100' HORIZ.
1" = 10' VERT.
LINER WEST TO LINER EAST IS 2233± FEET

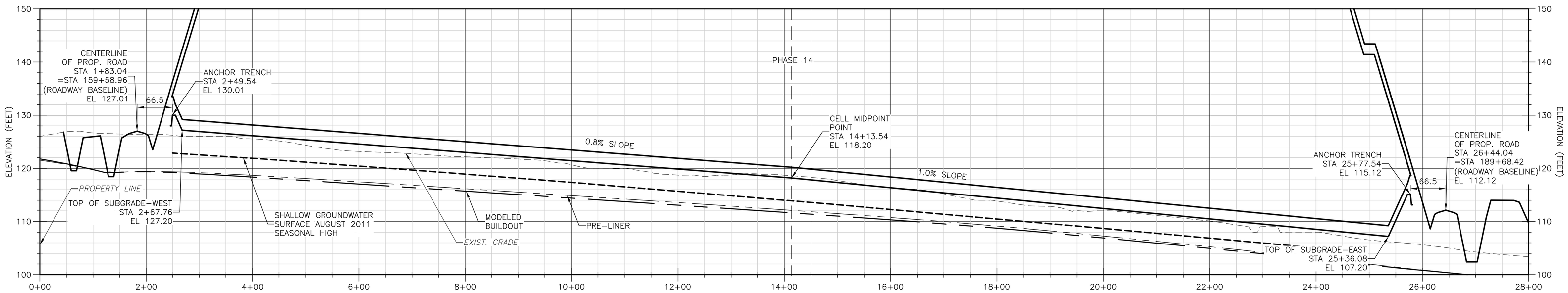

SECTION 35 (C-4)
1" = 100' HORIZ.
1" = 10' VERT.
LINER WEST TO LINER EAST IS 2268± FEET

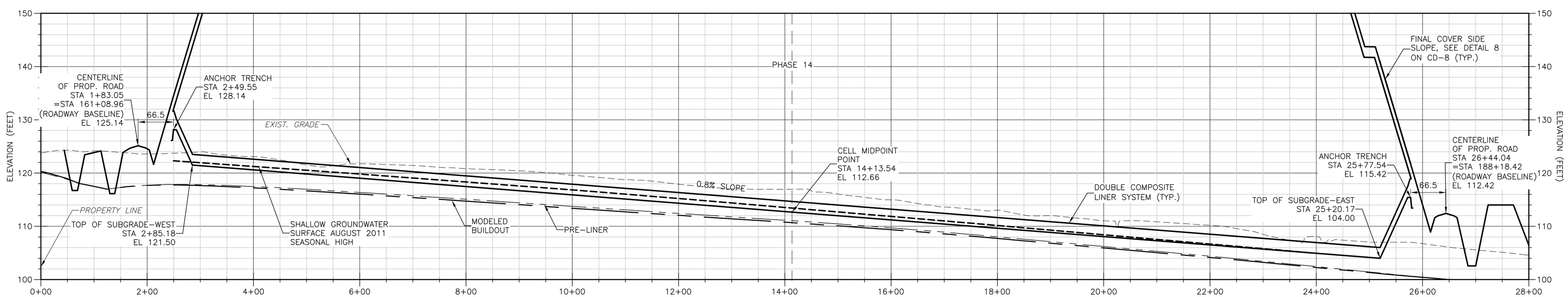

SECTION 36 (C-4)
1" = 100' HORIZ.
1" = 10' VERT.
LINER WEST TO LINER EAST IS 2235± FEET

NOTE:

1. STATIONING AS PER SHEET C-8
2. FOR LAYERING ON THE DOUBLE COMPOSITE LINER SYSTEM, SEE DETAIL A ON CD-1.

LEGEND

- POST SETTLEMENT SLOPE
- MODELED BUILDOUT
- SHALLOW GROUNDWATER SURFACE ELEVATIONS
- PRE-LINER SEASONAL HIGH

REV. NO.	DATE	DRWN	CHKD	REMARKS

DESIGNED BY: R. KADAMBALA
DRAWN BY: B. CHAPMAN
SHEET CHK'D BY: J. HOFFMAN
CROSS CHK'D BY: I. POLEMATIDIS
APPROVED BY: J. LADNER
DATE: JULY 2013

CDM Smith
8381 Dix Ellis Trail., Suite 400
Jacksonville, Fl 32256
Tel: (904) 731-7109
FL COA NO. ED-0000020

CITY OF JACKSONVILLE

TRAIL RIDGE LANDFILL PHASES 6-14
CLASS 1 CELL EXPANSION

SECTIONS - PHASE 14

PROJECT NO. 9012-80695
FILE NAME: C024SCTN.DWG
SHEET NO.
C-24

FOR PERMIT- NOT FOR CONSTRUCTION

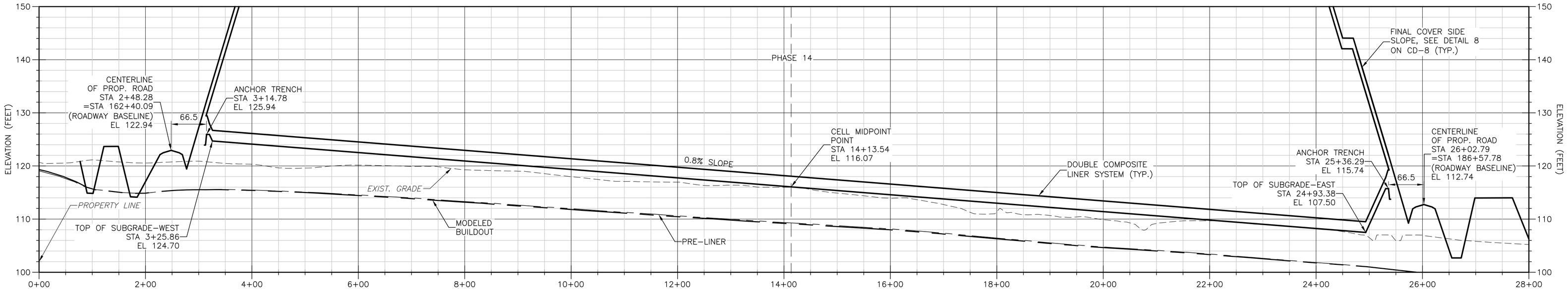

SECTION 37 / C-4

1" = 100' HORIZ.
1" = 10' VERT.

LINER WEST TO LINER EAST IS 2168± FEET

NOTE:

1. STATIONING AS PER SHEET C-8
2. FOR LAYERING ON THE DOUBLE COMPOSITE LINER SYSTEM, SEE DETAIL A ON CD-1.

LEGEND

- POST SETTLEMENT SLOPE
- MODELED BUILDOUT
- SHALLOW GROUNDWATER SURFACE ELEVATIONS
- PRE-LINER SEASONAL HIGH

REV. NO.	DATE	DRWN	CHKD	REMARKS

DESIGNED BY: R. KADAMBALA
DRAWN BY: B. CHAPMAN
SHEET CHK'D BY: J. HOFFMAN
CROSS CHK'D BY: I. POLEMATIDIS
APPROVED BY: J. LADNER
DATE: JULY 2013

CDM Smith
8381 Dix Ellis Trail., Suite 400
Jacksonville, Fl 32256
Tel: (904) 731-7109
FL COA NO. ED-0000020

CITY OF JACKSONVILLE

TRAIL RIDGE LANDFILL PHASES 6-14
CLASS 1 CELL EXPANSION

SECTIONS - PHASE 14

PROJECT NO. 9012-80695
FILE NAME: C025SCTN.DWG
SHEET NO.
C-25

FOR PERMIT- NOT FOR CONSTRUCTION

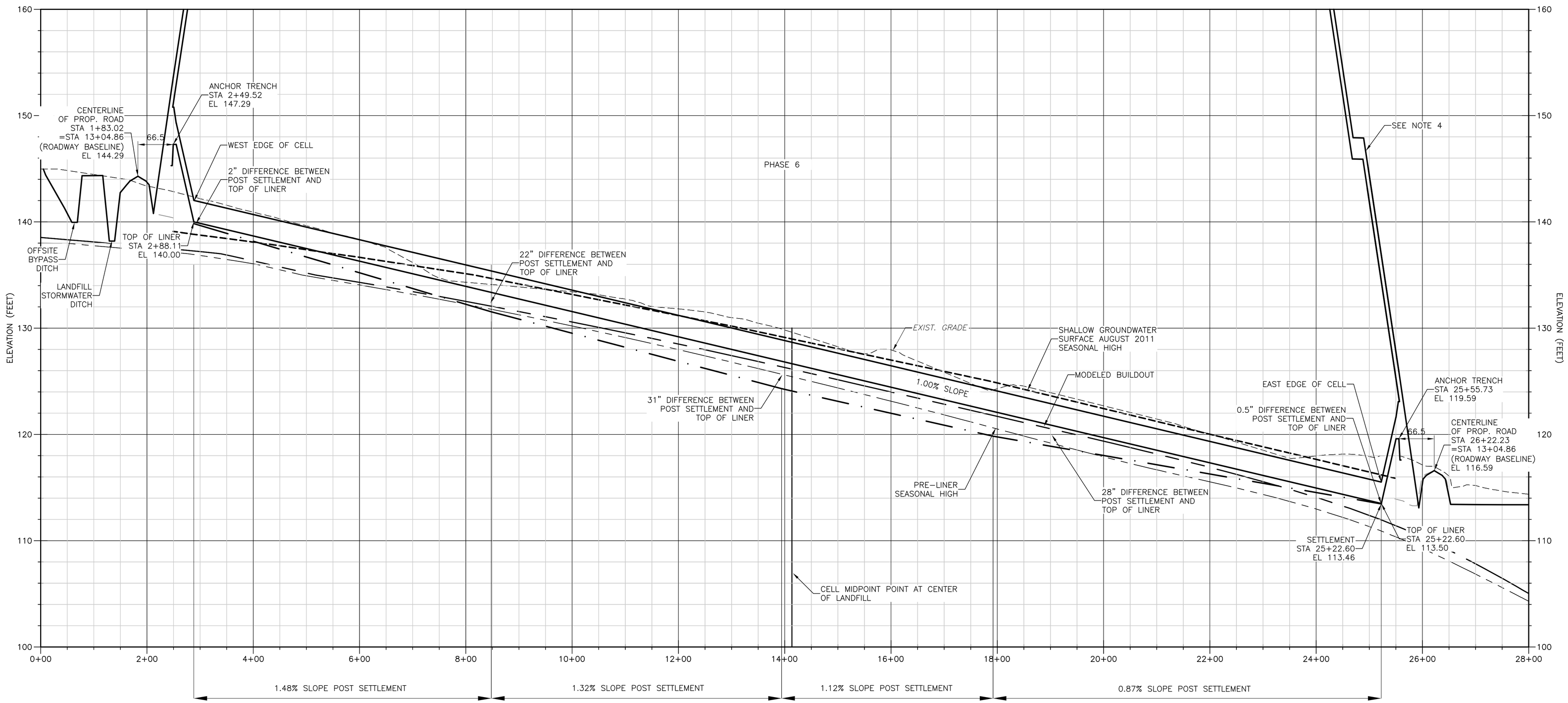

SECTION 4 / C-4

1" = 100' HORIZ.
1" = 5' VERT.

LINER WEST TO LINER EAST IS 2178± FEET

NOTE:

1. SHALLOW GROUNDWATER SURFACE AUGUST 2011 DENOTE SHALLOW MONITOR WELLS AND PIEZOMETER READINGS IN AUGUST 2011. THESE LEVELS REPRESENT THE 2011 SEASONAL HIGH
2. MODELED BUILDOUT ELEVATIONS REPRESENT THE MODELED SHALLOW GROUNDWATER ELEVATIONS WITH THE STORMWATER SYSTEM IN PLACE AND THE ENTIRE FOOTPRINT LINED. THIS IS A LONG TERM SCENARIO
3. PRE-LINER SEASONAL HIGH ELEVATIONS REPRESENT THE MODELED SHALLOW GROUNDWATER ELEVATIONS WITH A PORTION OF THE STORMWATER SYSTEM BUILT BUT NO LINER INSTALLED. THESE ARE THE EXPECTED GROUNDWATER LEVELS AT THE TIME OF INSTALLATION.
4. FOR THE FINAL COVER ON ALL SIDE SLOPES, REFER TO DETAIL A ON SHEET CD-8.

LEGEND

- POST SETTLEMENT SLOPE
- MODELED BUILDOUT
- PRE-LINER SEASONAL HIGH
- SHALLOW GROUNDWATER SURFACE ELEVATIONS

REV. NO.	DATE	DRWN	CHKD	REMARKS

DESIGNED BY: R. KADAMBALA
DRAWN BY: B. CHAPMAN
SHEET CHK'D BY: J. HOFFMAN
CROSS CHK'D BY: I. POLEMATIDIS
APPROVED BY: J. LADNER
DATE: JULY 2013

CDM Smith
8381 Dix Ellis Trail, Suite 400
Jacksonville, Fl 32256
Tel: (904) 731-7109
FL COA NO. ED-0000020

CITY OF JACKSONVILLE

TRAIL RIDGE LANDFILL PHASES 6-14
CLASS 1 CELL EXPANSION

POST SETTLEMENT GRADES
SECTION 4

PROJECT NO. 9012-80695
FILE NAME: C028PSGR
SHEET NO. C-28

FOR PERMIT- NOT FOR CONSTRUCTION

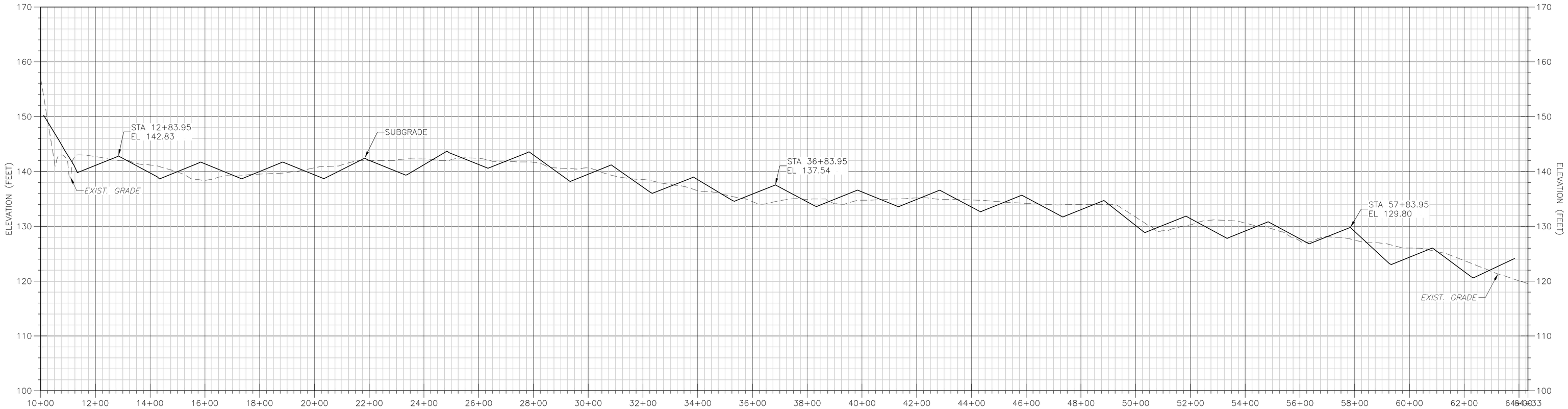

SECTION 1

HORZ. 1"=200'
VERT. 1"=10'

C-3

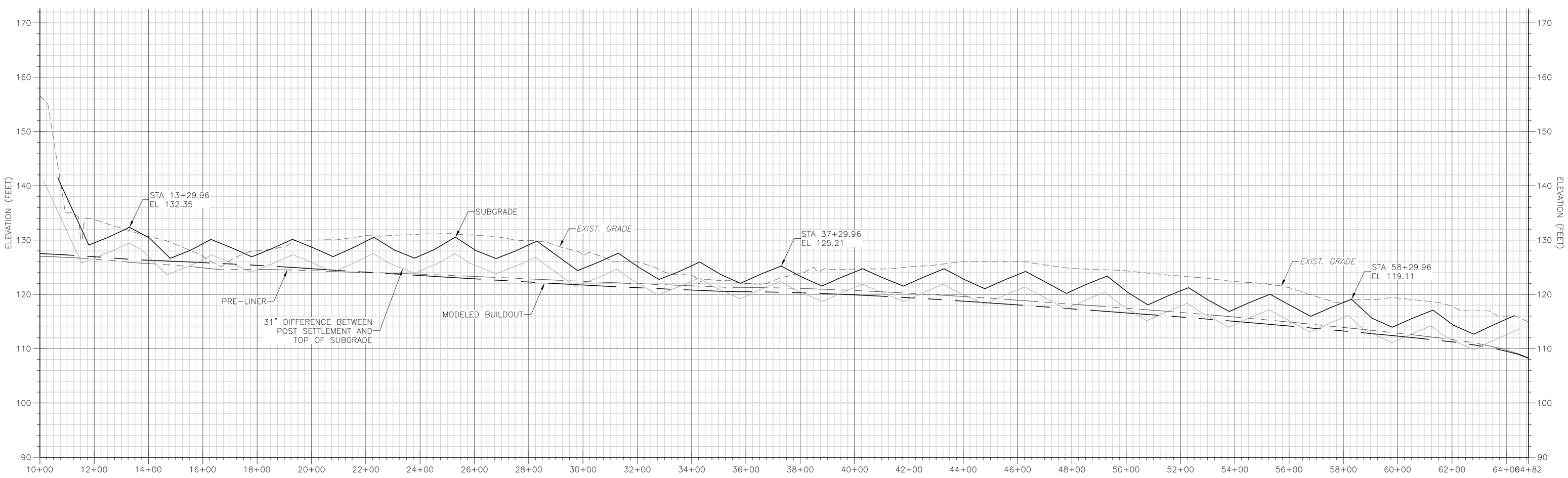

SECTION 2

HORZ. 1"=200'
VERT. 1"=10'

C-3

REV. NO.	DATE	DRWN	CHKD	REMARKS

DESIGNED BY: R. KADAMBALA
DRAWN BY: B. CHAPMAN
SHEET CHK'D BY: J. HOFFMAN
CROSS CHK'D BY: I. POLEMATIDIS
APPROVED BY: J. LADNER
DATE: JULY 2013

CDM Smith
8381 Dix Ellis Trail., Suite 400
Jacksonville, Fl 32256
Tel: (904) 731-7109
FL COA NO. ED-0000020

CITY OF JACKSONVILLE

TRAIL RIDGE LANDFILL PHASES 6-14
CLASS 1 CELL EXPANSION

PROPOSED BUILDOUT
NORTH / SOUTH SECTIONS

PROJECT NO. 9012-80695
FILE NAME: C029PBSC

SHEET NO.
C-29

FOR PERMIT- NOT FOR CONSTRUCTION

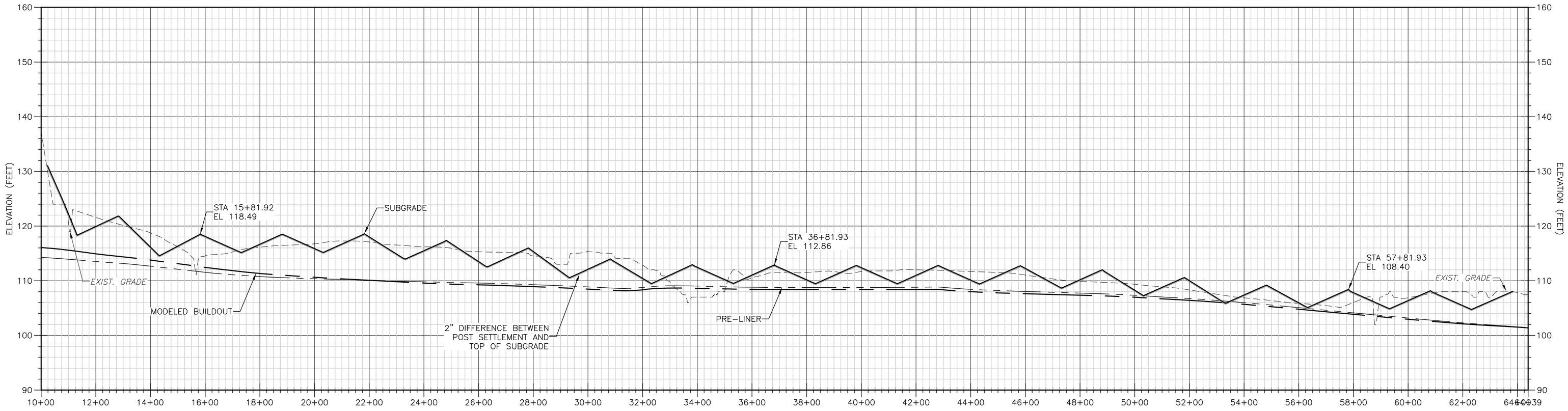

SECTION 3 / C-3

HORZ. 1"=200'
VERT. 1"=10'

REV. NO.	DATE	DRWN	CHKD	REMARKS

DESIGNED BY: R. KADAMBALA
DRAWN BY: B. CHAPMAN
SHEET CHK'D BY: J. HOFFMAN
CROSS CHK'D BY: I. POLEMATIDIS
APPROVED BY: J. LADNER
DATE: JULY 2013

CDM Smith
8381 Dix Ellis Trail., Suite 400
Jacksonville, Fl 32256
Tel: (904) 731-7109
FL COA NO. ED-0000020

CITY OF JACKSONVILLE

TRAIL RIDGE LANDFILL PHASES 6-14
CLASS 1 CELL EXPANSION

PROPOSED BUILDOUT
NORTH / SOUTH SECTIONS

PROJECT NO. 9012-80695
FILE NAME: C030PBSC
SHEET NO.
C-30

FOR PERMIT- NOT FOR CONSTRUCTION

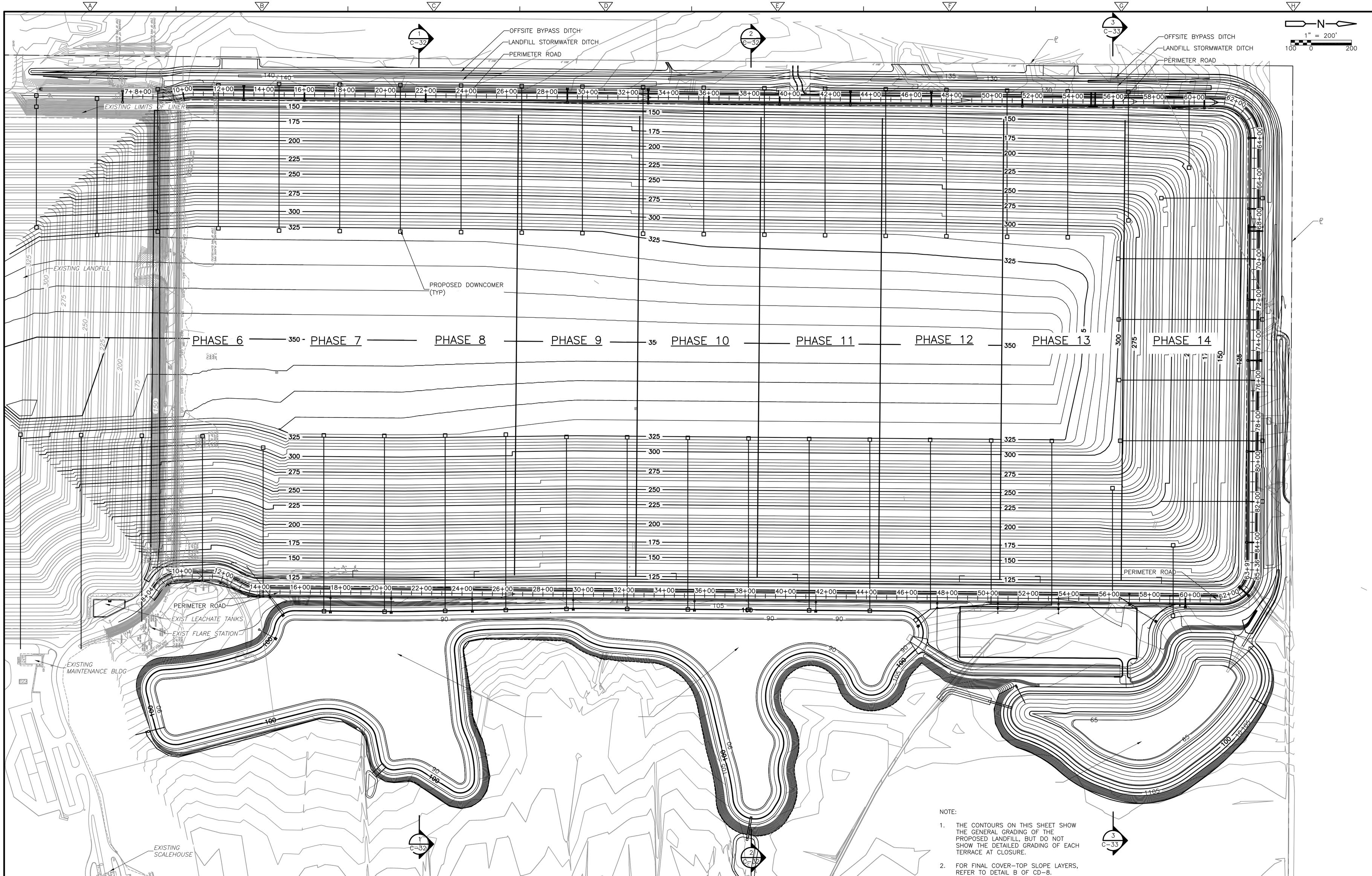

NOTE:

1. THE CONTOURS ON THIS SHEET SHOW THE GENERAL GRADING OF THE PROPOSED LANDFILL, BUT DO NOT SHOW THE DETAILED GRADING OF EACH TERRACE AT CLOSURE.
2. FOR FINAL COVER-TOP SLOPE LAYERS, REFER TO DETAIL B OF CD-8.

REV. NO.	DATE	DRWN	CHKD	REMARKS

DESIGNED BY: R. KADAMBALA
DRAWN BY: B. CHAPMAN
SHEET CHK'D BY: J. HOFFMAN
CROSS CHK'D BY: A. SALEH
APPROVED BY: J. LADNER
DATE: JULY 2013

CDM Smith
8381 Dix Ellis Trail., Suite 400
Jacksonville, Fl 32256
Tel: (904) 731-7109
FL COA NO. ED-0000020

CITY OF JACKSONVILLE

TRAIL RIDGE LANDFILL PHASES 6-14
CLASS 1 CELL EXPANSION

PROPOSED SITE GRADING
BUILDOUT CLOSURE PLAN

PROJECT NO. 9012-80695
FILE NAME: C031STPL

SHEET NO.
C-31

FOR PERMIT- NOT FOR CONSTRUCTION

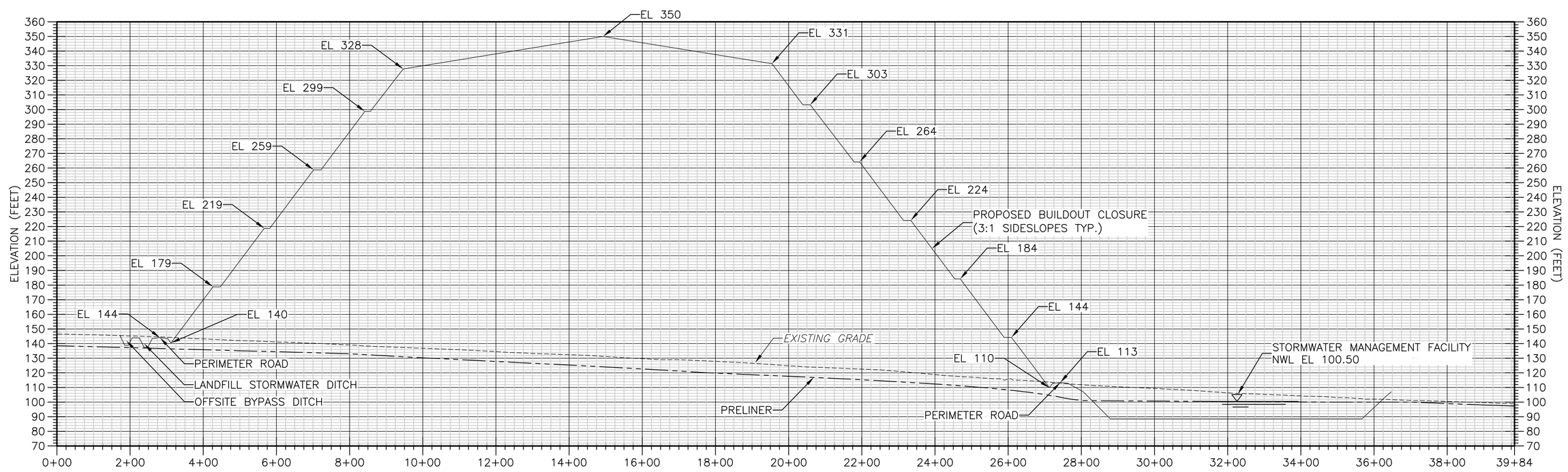

SECTION 1 (C-31)

HORZ. 1"=200'
VERT. 1"=50'

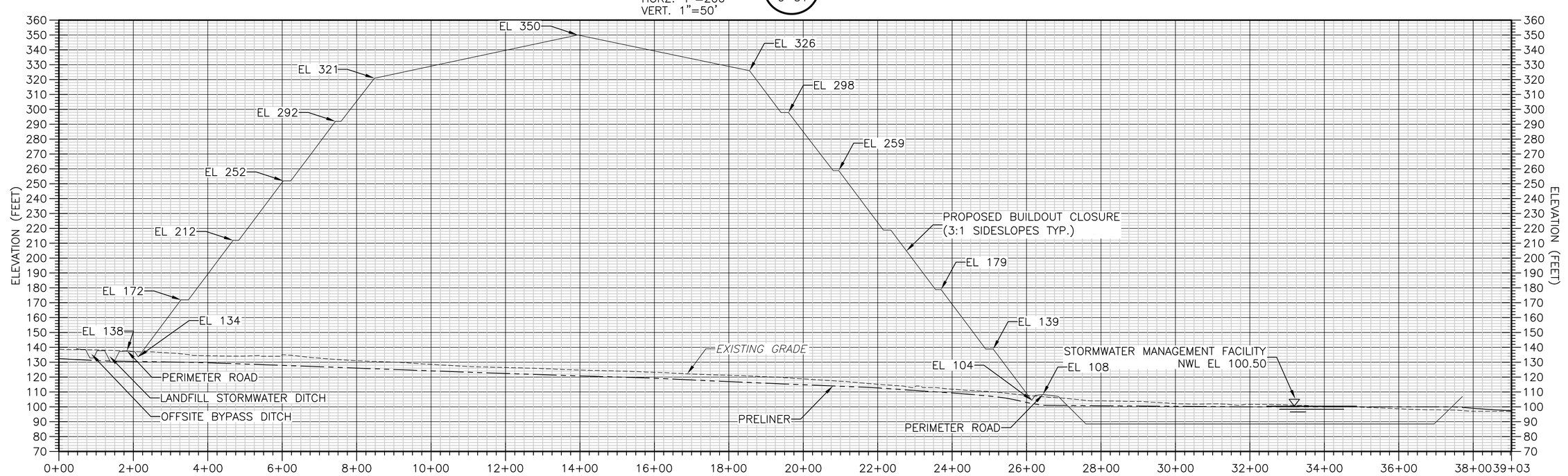

SECTION 2 (C-31)

HORZ. 1"=200'
VERT. 1"=50'

BYPASS POND	
TOP OF BANK	105.0
100 YR 24 HR	103.52
25 YR 24 HR	102.33

SWM POND	
TOP OF BANK	107.0
100 YR 24 HR	105.95
25 YR 24 HR	104.86

REV. NO.	DATE	DRWN	CHKD	REMARKS

DESIGNED BY: R. KADAMBALA
DRAWN BY: B. CHAPMAN
SHEET CHK'D BY: J. HOFFMAN
CROSS CHK'D BY: A. MULLA SALEH
APPROVED BY: J. LADNER
DATE: JULY 2013

CDM Smith
8381 Dix Ellis Trail., Suite 400
Jacksonville, Fl 32256
Tel: (904) 731-7109
FL COA NO. ED-0000020

CITY OF JACKSONVILLE

TRAIL RIDGE LANDFILL PHASES 6-14
CLASS 1 CELL EXPANSION

PROPOSED BUILDOUT CLOSURE
SECTIONS

PROJECT NO. 9012-80695
FILE NAME: C032PBSC

SHEET NO.
C-32

FOR PERMIT- NOT FOR CONSTRUCTION

BYPASS POND	
TOP OF BANK	105.0
100 YR 24 HR	103.52
25 YR 24 HR	102.33

SWM POND	
TOP OF BANK	107.0
100 YR 24 HR	105.95
25 YR 24 HR	104.86

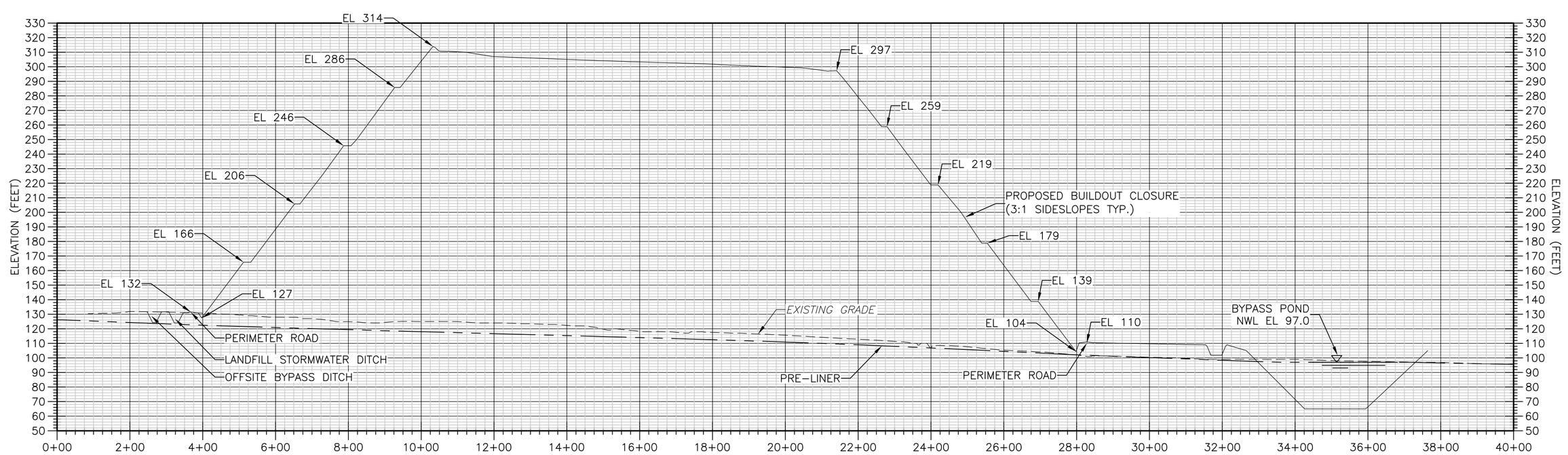

SECTION 3 / C-31

HORZ. 1"=200'
VERT. 1"=50'

REV. NO.	DATE	DRWN	CHKD	REMARKS

DESIGNED BY: R. KADAMBALA
DRAWN BY: B. CHAPMAN
SHEET CHK'D BY: J. HOFFMAN
CROSS CHK'D BY: A. SALEH
APPROVED BY: J. LADNER
DATE: JULY 2013

CDM Smith
8381 Dix Ellis Trail., Suite 400
Jacksonville, Fl 32256
Tel: (904) 731-7109
FL COA NO. ED-0000020

CITY OF JACKSONVILLE

TRAIL RIDGE LANDFILL PHASES 6-14
CLASS 1 CELL EXPANSION

PROPOSED BUILDOUT CLOSURE
SECTIONS

PROJECT NO. 9012-80695
FILE NAME: C033PBSC

SHEET NO.
C-33

FOR PERMIT- NOT FOR CONSTRUCTION

NOTES:

1. FOR DEMOLITION OF EXISTING GAS MANAGEMENT SYSTEM, REFER TO SHEET C-6.
2. NOTE THAT EXISTING 20 INCH GAS MAIN LOCATED UNDER EXISTING ROAD IN PHASE 1 SHALL BE ENCASED IN CORRUGATED PIPE AND ABLE TO WITHSTAND THE DYNAMIC SOIL LOADING BASED ON AASHTO H-20 LOADING OF 16,000 LBS.
3. ALL HORIZONTAL COLLECTOR AND VERTICAL WELLS SHALL HAVE A CONDENSATE FM AND AIRLINE ASSOCIATED, SIMILAR TO THE EXISTING GAS MANAGEMENT SYSTEM.
4. FIRST ROW OF HORIZONTAL GAS COLLECTOR SHALL BE PUT INTO PLACE AFTER 40FT OF WASTE. SECOND ROW OF HORIZONTAL COLLECTOR SHALL BE PLACED AFTER ANOTHER 50FT OF WASTE AND SHALL BE STAGGERED IN ARRANGEMENT FROM FIRST LAYER VERTICAL WELLS WILL PROCEED BEYOND THAT LEVEL AND BE AT A MINIMUM OF 60-80FT FROM THE BASE STARTING AT THE SIDE SLOPE.
5. GAS MANAGEMENT SHOWN DEPICTS DIFFERENT STAGES UNDER THE FILL SEQUENCE. EAST SIDE OF PHASE 7 IS SHOWN TO HAVE LESS THAN 40 FEET OF WASTE AND THEREFOR HAS NOT REACHED THE LEVEL NECESSARY TO ADD THE FIRST LAYER HORIZONTAL COLLECTORS.

KEY

NEW HORIZONTAL COLLECTOR

NEW GAS HEADER

NEW VERTICAL WELL

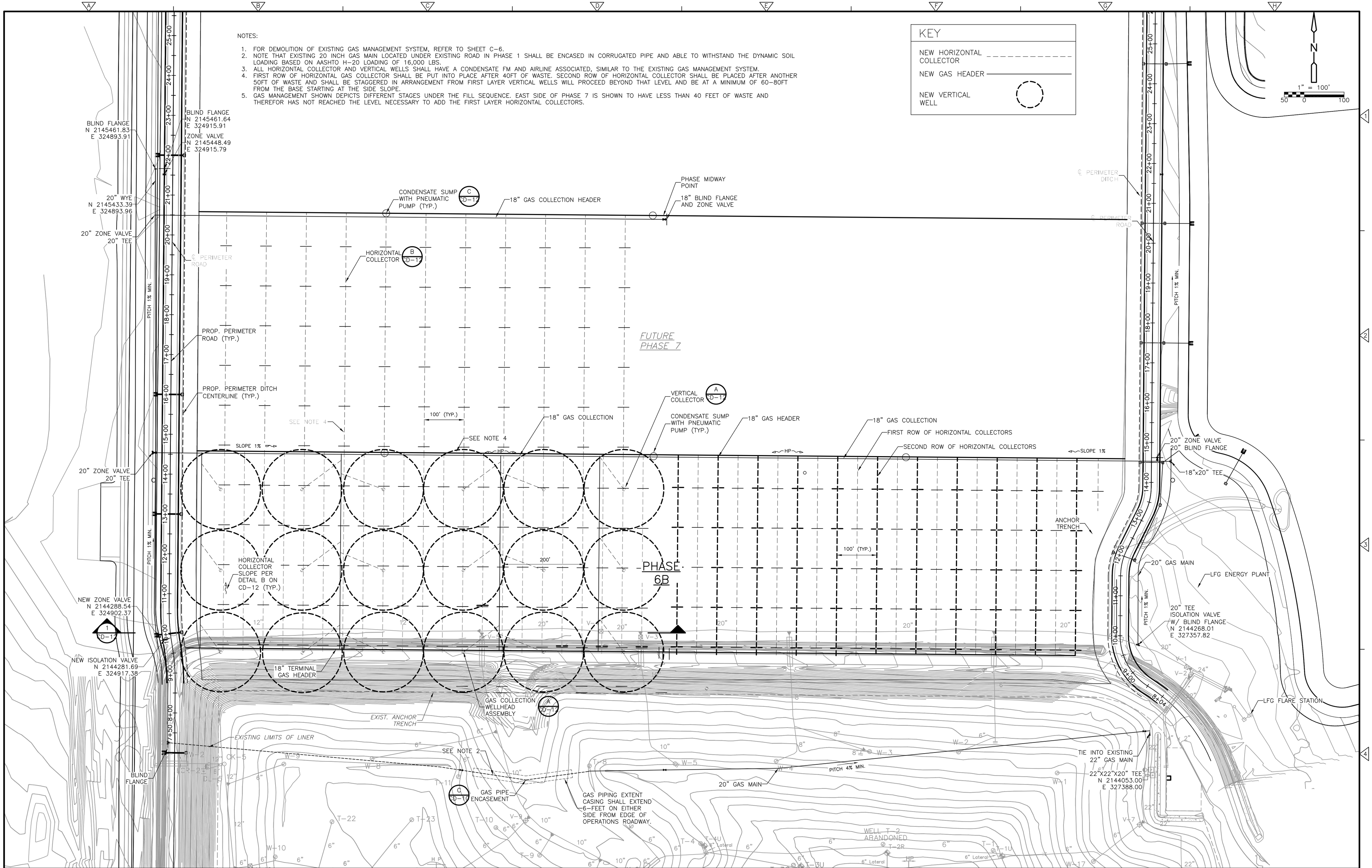

REV. NO.	DATE	DRWN	CHKD	REMARKS

DESIGNED BY: R. KADAMBALA
DRAWN BY: B. CHAPMAN
SHEET CHK'D BY: J. HOFFMAN
CROSS CHK'D BY: A. SALEH
APPROVED BY: J. LADNER
DATE: JULY 2013

CDM Smith
8381 Dix Ellis Trail, Suite 400
Jacksonville, Fl 32256
Tel: (904) 731-7109
FL COA NO. ED-0000020

CITY OF JACKSONVILLE

TRAIL RIDGE LANDFILL PHASES 6-14
CLASS 1 CELL EXPANSION

GAS MANAGEMENT SYSTEM

PROJECT NO. 9012-80695
FILE NAME: C034STPL

SHEET NO.
C-34

FOR PERMIT- NOT FOR CONSTRUCTION

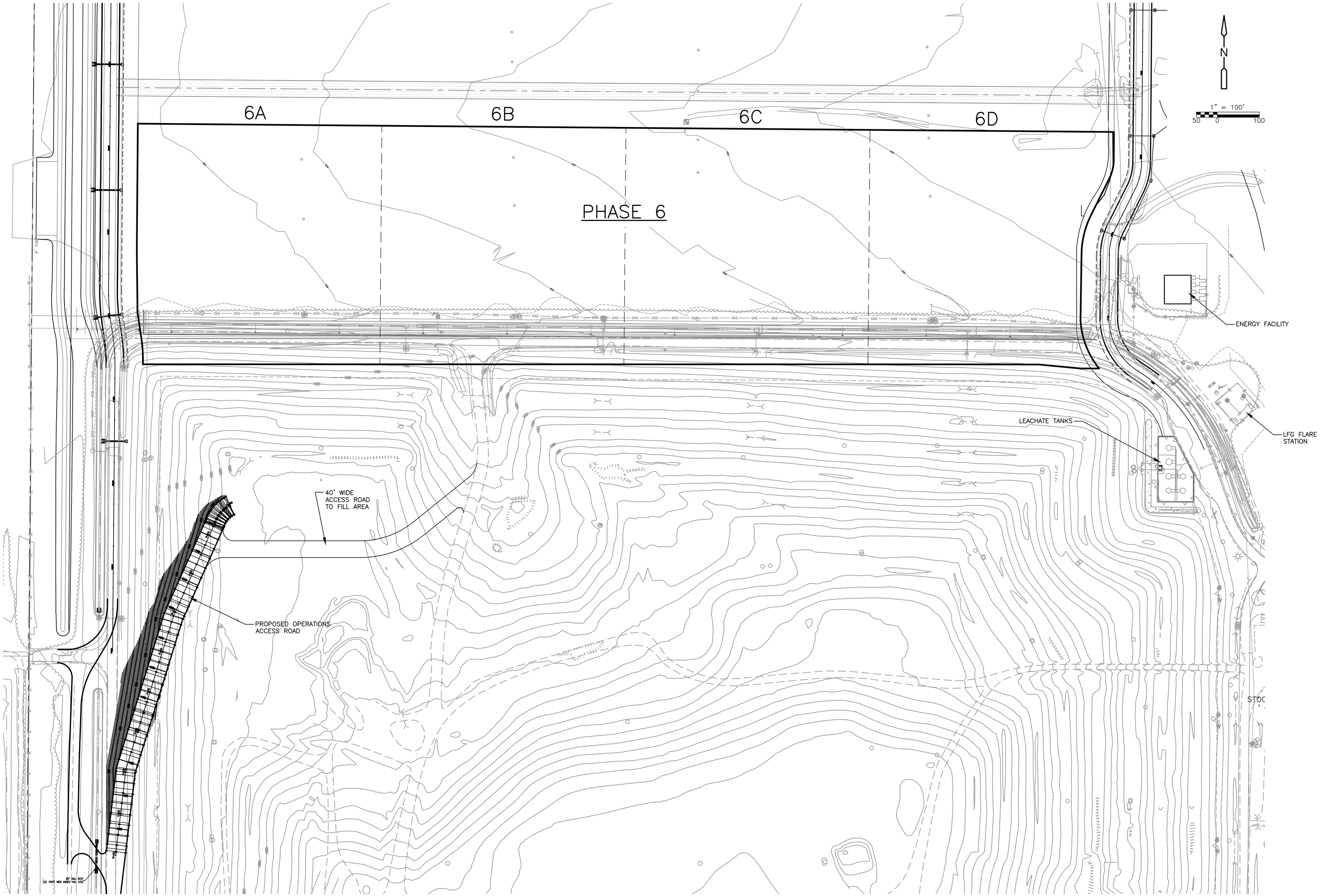

REV. NO.	DATE	DRWN	CHKD	REMARKS

DESIGNED BY: R. KADAMBALA
DRAWN BY: B. CHAPMAN
SHEET CHK'D BY: J. HOFFMAN
CROSS CHK'D BY: A. SALEH
APPROVED BY: J. LADNER
DATE: AUG. 2013

CDM Smith
8381 Dix Ellis Trail., Suite 400
Jacksonville, Fl 32256
Tel: (904) 731-7109
FL COA NO. ED-0000020

CITY OF JACKSONVILLE

TRAIL RIDGE LANDFILL PHASES 6-14
CLASS 1 CELL EXPANSION

PROPOSED OPERATIONS ACCESS ROAD
PHASE 6

PROJECT NO. 9012-80695
FILE NAME: C035PWFS

SHEET NO.
C-35

FOR PERMIT - NOT FOR CONSTRUCTION

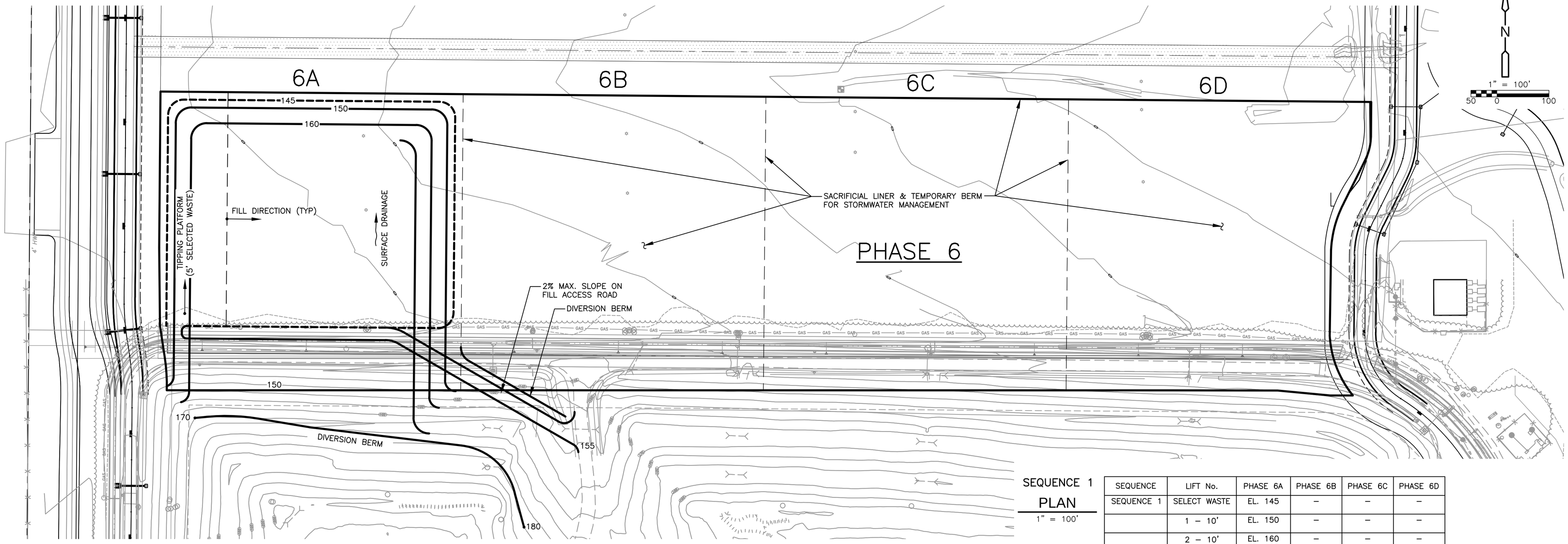

SEQUENCE 1
PLAN
1" = 100'

SEQUENCE	LIFT No.	PHASE 6A	PHASE 6B	PHASE 6C	PHASE 6D
SEQUENCE 1	SELECT WASTE	EL. 145	–	–	–
	1 – 10'	EL. 150	–	–	–
	2 – 10'	EL. 160	–	–	–

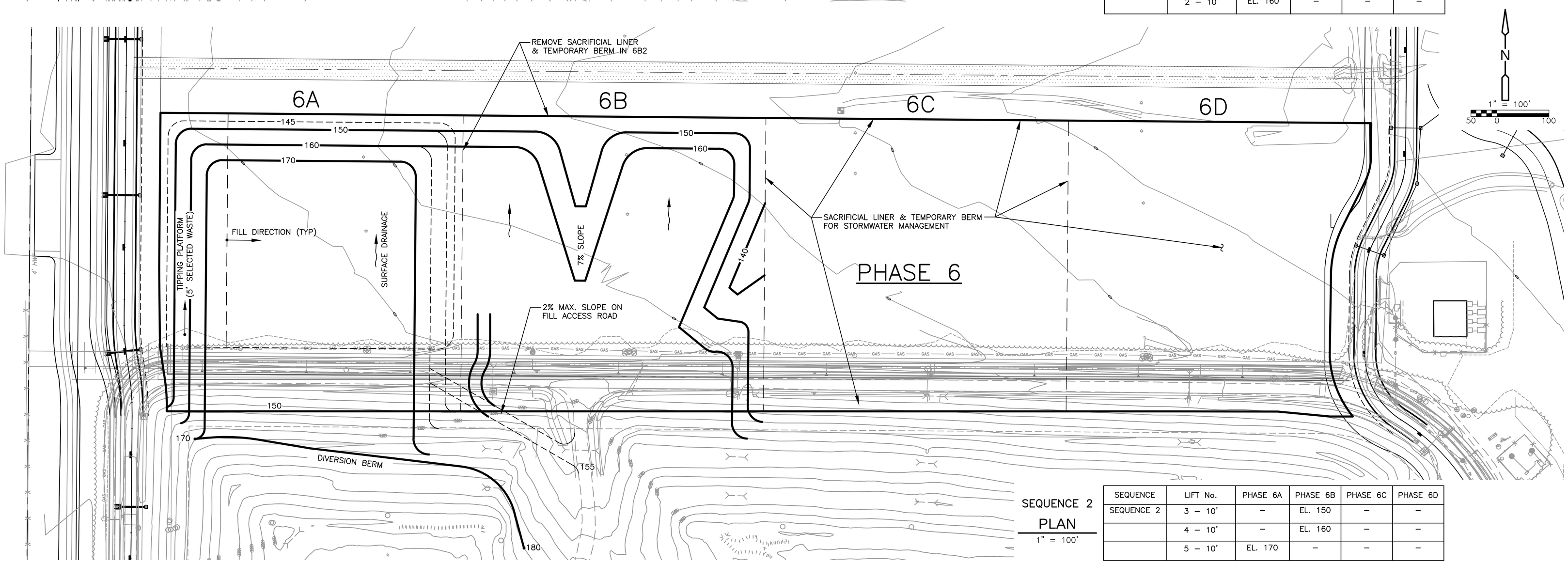

SEQUENCE 2
PLAN
1" = 100'

SEQUENCE	LIFT No.	PHASE 6A	PHASE 6B	PHASE 6C	PHASE 6D
SEQUENCE 2	3 – 10'	–	EL. 150	–	–
	4 – 10'	–	EL. 160	–	–
	5 – 10'	EL. 170	–	–	–

REV. NO.	DATE	DRWN	CHKD	REMARKS

DESIGNED BY: R. KADAMBALA
DRAWN BY: B. CHAPMAN
SHEET CHK'D BY: J. HOFFMAN
CROSS CHK'D BY: A. SALEH
APPROVED BY: J. LADNER
DATE: AUG. 2013

CDM Smith
8381 Dix Ellis Trail., Suite 400
Jacksonville, Fl 32256
Tel: (904) 731-7109
FL COA NO. ED-0000020

CITY OF JACKSONVILLE

TRAIL RIDGE LANDFILL PHASES 6-14
CLASS 1 CELL EXPANSION

PROPOSED WASTE FILL SEQUENCE
PHASE 6

PROJECT NO. 9012–80695
FILE NAME: C035PWFS
SHEET NO.
C-36

FOR PERMIT - NOT FOR CONSTRUCTION

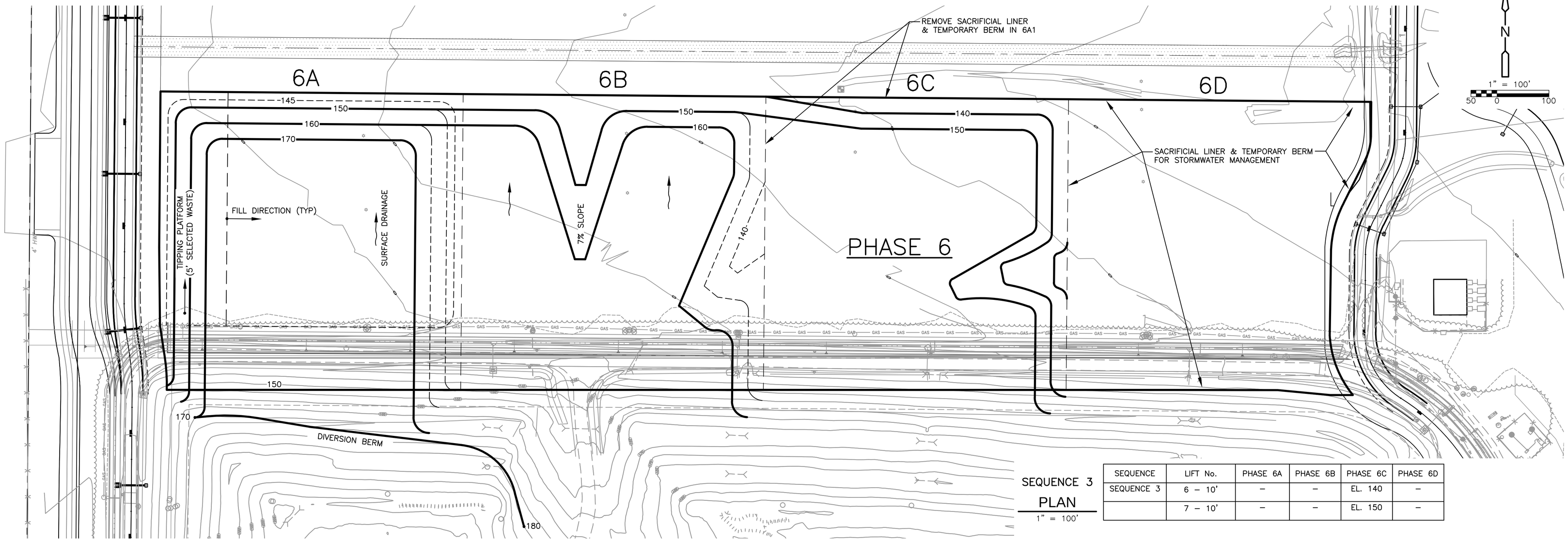

SEQUENCE 3
PLAN
1" = 100'

SEQUENCE	LIFT No.	PHASE 6A	PHASE 6B	PHASE 6C	PHASE 6D
SEQUENCE 3	6 – 10'	–	–	EL. 140	–
	7 – 10'	–	–	EL. 150	–

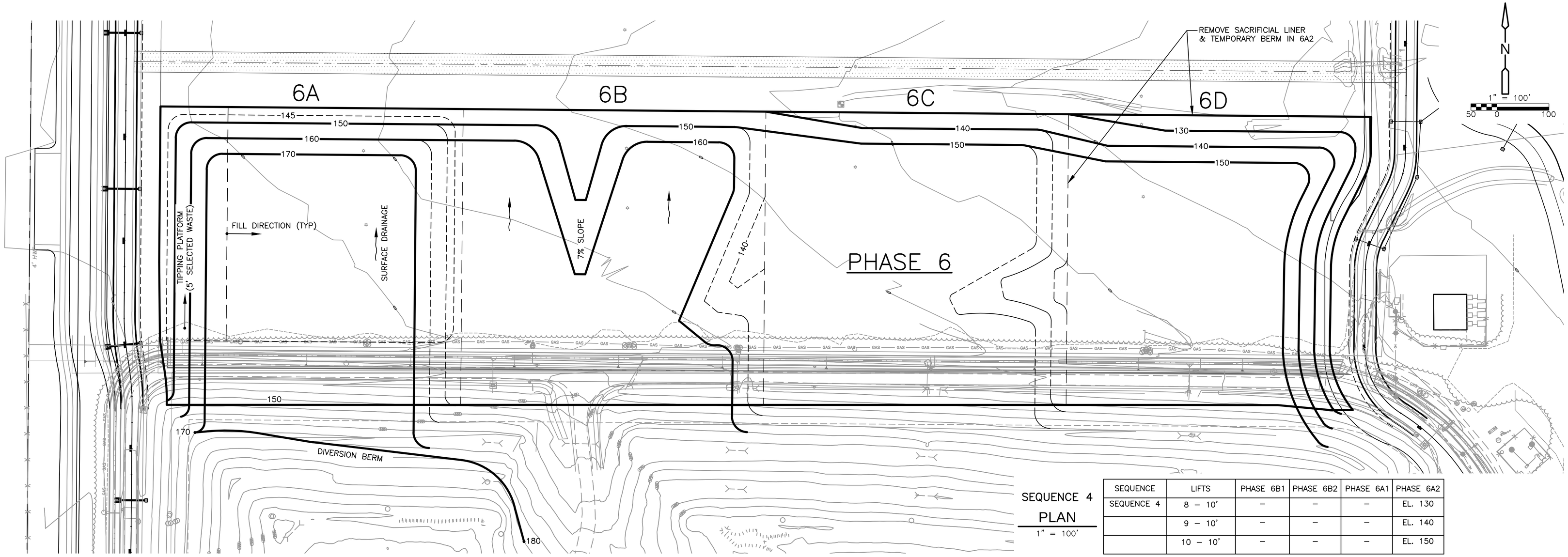

SEQUENCE 4
PLAN
1" = 100'

SEQUENCE	LIFTS	PHASE 6B1	PHASE 6B2	PHASE 6A1	PHASE 6A2
SEQUENCE 4	8 – 10'	–	–	–	EL. 130
	9 – 10'	–	–	–	EL. 140
	10 – 10'	–	–	–	EL. 150

REV. NO.	DATE	DRWN	CHKD	REMARKS

DESIGNED BY: R. KADAMBALA
DRAWN BY: B. CHAPMAN
SHEET CHK'D BY: J. HOFFMAN
CROSS CHK'D BY: A. SALEH
APPROVED BY: J. LADNER
DATE: AUG. 2013

CDM Smith
8381 Dix Ellis Trail., Suite 400
Jacksonville, Fl 32256
Tel: (904) 731-7109
FL COA NO. ED-0000020

CITY OF JACKSONVILLE

TRAIL RIDGE LANDFILL PHASES 6-14
CLASS 1 CELL EXPANSION

PROPOSED WASTE FILL SEQUENCE
PHASE 6

PROJECT NO. 9012-80695
FILE NAME: C035PWFS
SHEET NO.
C-37

FOR PERMIT - NOT FOR CONSTRUCTION

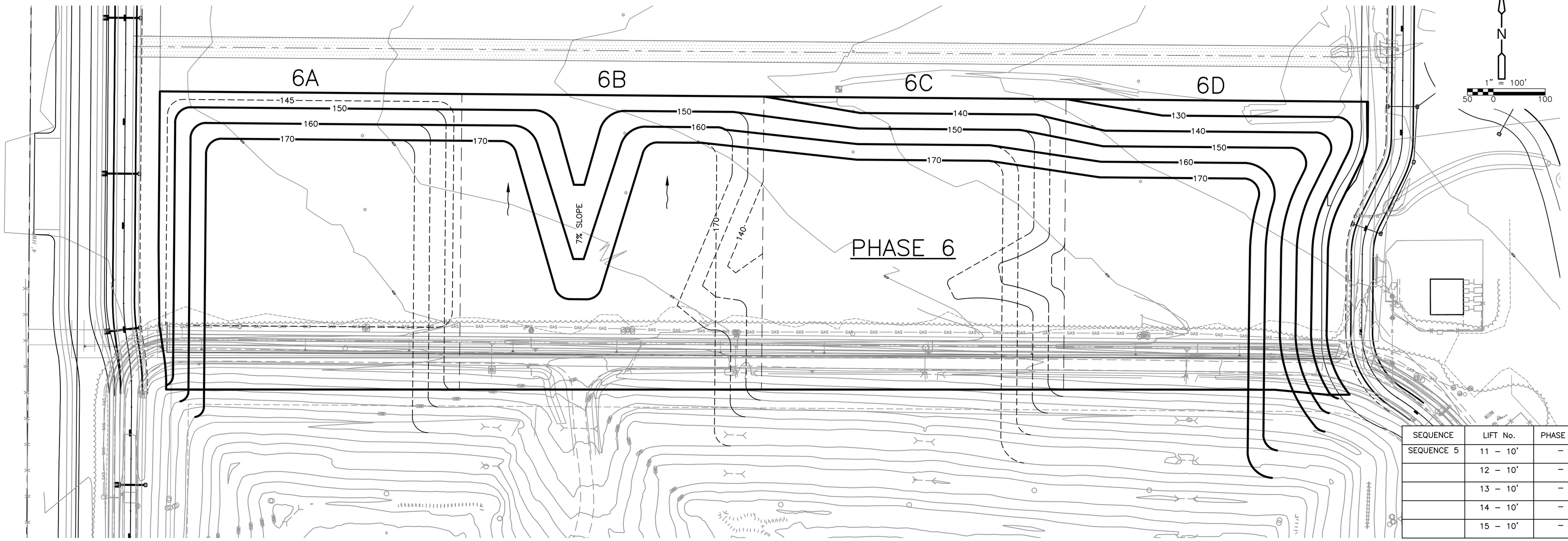

SEQUENCE 5

PLAN

1" = 100'

SEQUENCE	LIFT No.	PHASE 6A	PHASE 6B	PHASE 6C	PHASE 6D
SEQUENCE 5	11 – 10'	–	–	EL. 160	–
	12 – 10'	–	–	–	EL. 160
	13 – 10'	–	EL. 170	–	–
	14 – 10'	–	–	EL. 170	–
	15 – 10'	–	–	–	EL. 170

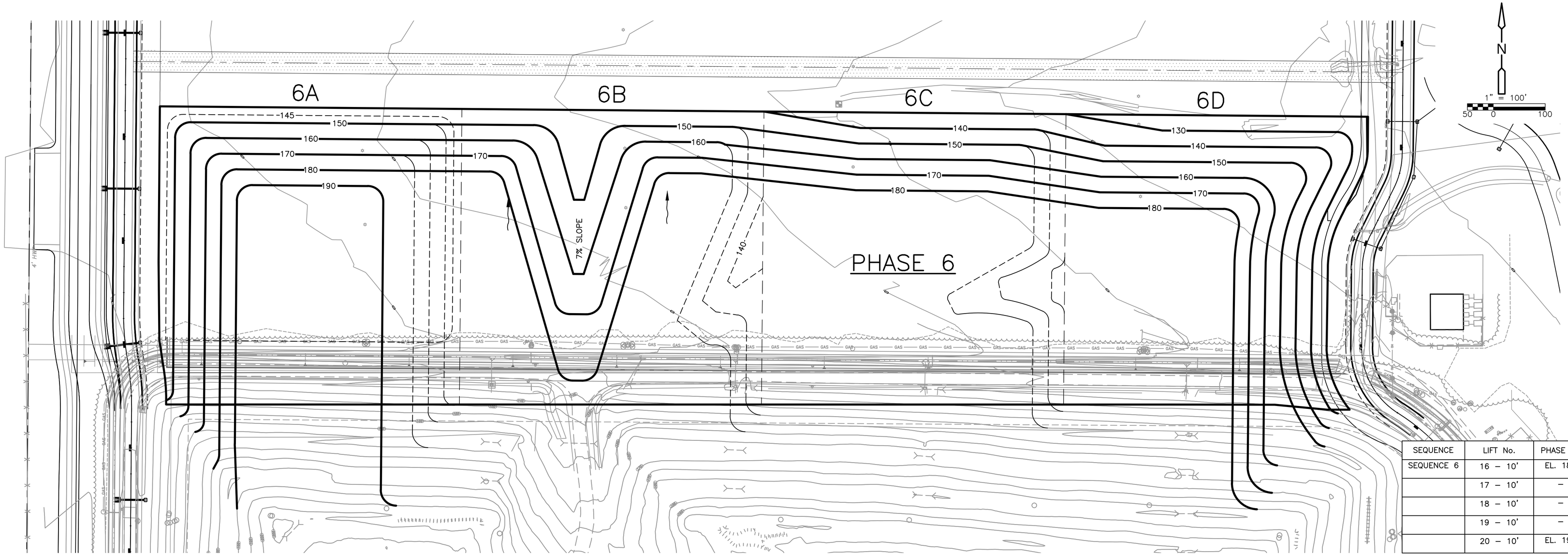

SEQUENCE 6

PLAN

1" = 100'

SEQUENCE	LIFT No.	PHASE 6A	PHASE 6B	PHASE 6C	PHASE 6D
SEQUENCE 6	16 – 10'	EL. 180	–	–	–
	17 – 10'	–	EL. 180	–	–
	18 – 10'	–	–	EL. 180	–
	19 – 10'	–	–	–	EL. 180
	20 – 10'	EL. 190	–	–	–

REV. NO.	DATE	DRWN	CHKD	REMARKS

DESIGNED BY: R. KADAMBALA
DRAWN BY: B. CHAPMAN
SHEET CHK'D BY: J. HOFFMAN
CROSS CHK'D BY: A. SALEH
APPROVED BY: J. LADNER
DATE: AUG. 2013

CDM Smith
8381 Dix Ellis Trail., Suite 400
Jacksonville, Fl 32256
Tel: (904) 731-7109
FL COA NO. ED-0000020

CITY OF JACKSONVILLE

TRAIL RIDGE LANDFILL PHASES 6-14
CLASS 1 CELL EXPANSION

PROPOSED WASTE FILL SEQUENCE
PHASE 6

PROJECT NO. 9012-80695
FILE NAME: C035PWFS

SHEET NO.
C-38

FOR PERMIT - NOT FOR CONSTRUCTION

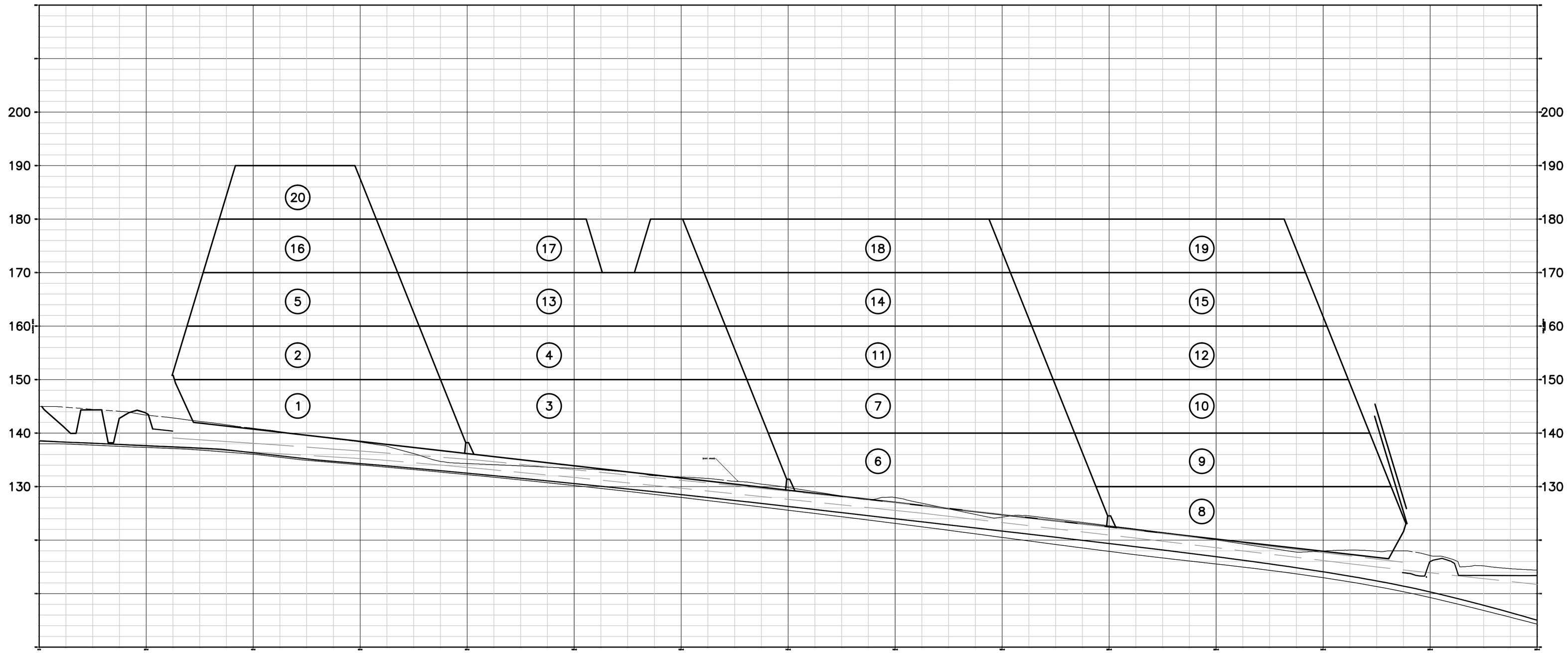

SECTION 4 / C-4

1" = 100' HORIZ.
1" = 10' VERT.

LINER WEST TO LINER EAST IS 2234± FEET

LEGEND

8 — LIFT SEQUENCE NUMBER

REV. NO.	DATE	DRWN	CHKD	REMARKS

DESIGNED BY: S. NEHRKE
DRAWN BY: C. SCOTT
SHEET CHK'D BY: J. HOFFMAN
CROSS CHK'D BY: J. LADNER
APPROVED BY: M. WHITE
DATE: AUG. 2013

CDM Smith
8381 Dix Ellis Trail., Suite 400
Jacksonville, Fl 32256
Tel: (904) 731-7109
FL COA NO. ED-0000020

CITY OF JACKSONVILLE

TRAIL RIDGE LANDFILL PHASES 6-14
CLASS 1 CELL EXPANSION

SEQUENCES

PROJECT NO. 9012-80695
FILE NAME: C012SCTN.DWG
SHEET NO.
C-39

FOR PERMIT - NOT FOR CONSTRUCTION

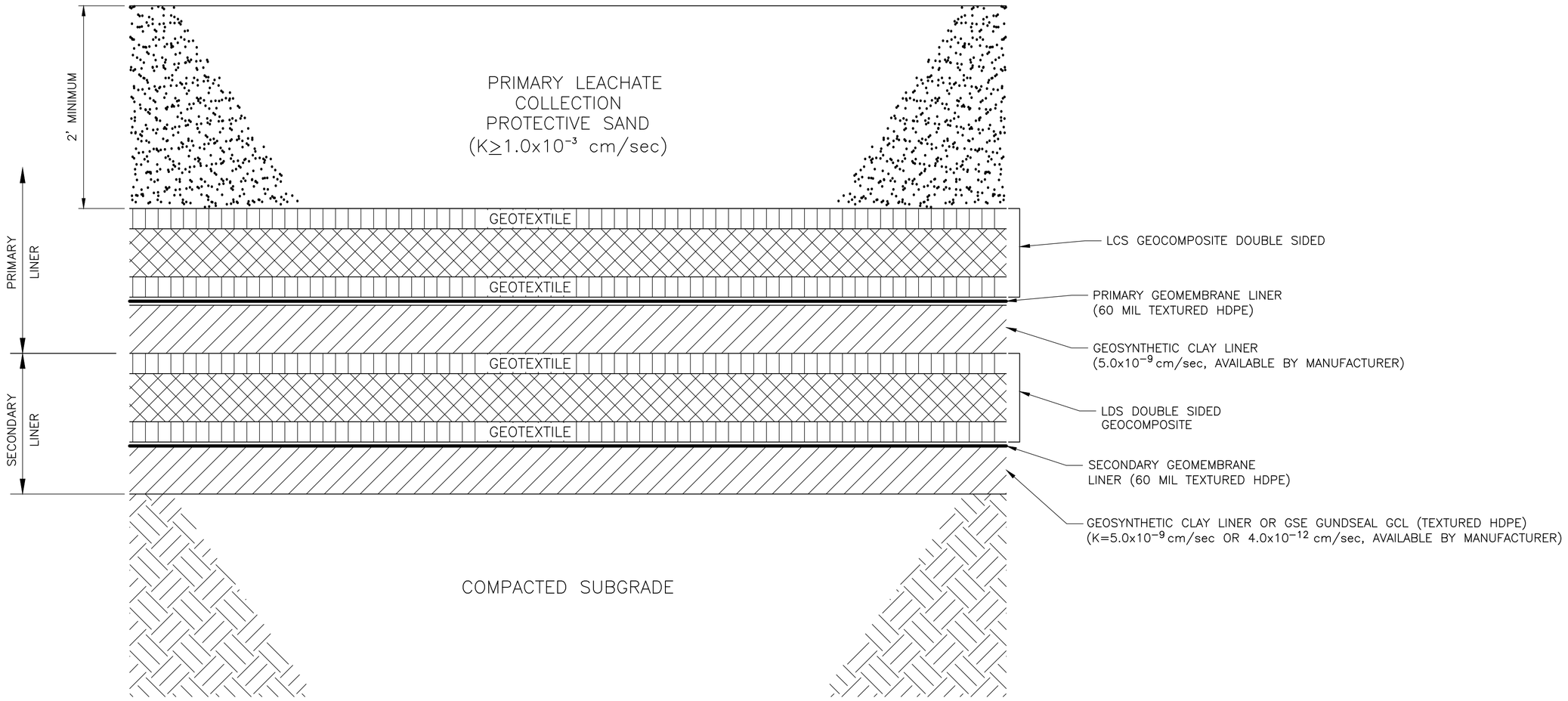

DOUBLE COMPOSITE LINER SYSTEM

DETAIL A
NTS

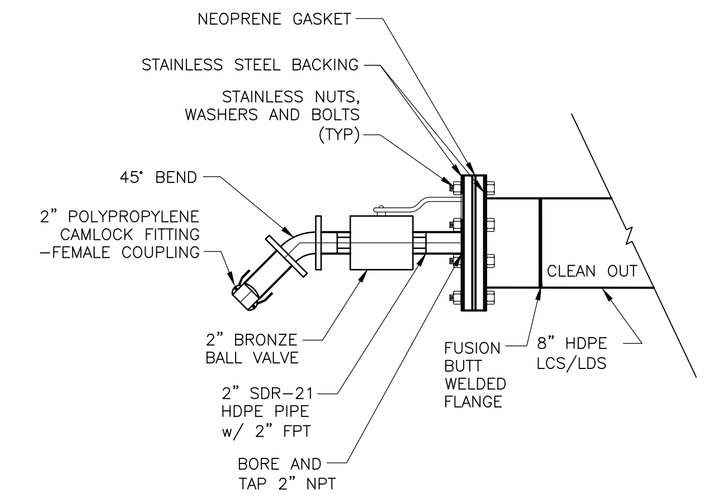

NOTES:

1. DRILL AND TAP CENTER OF BLIND FLANGE TO 2" FPT. SCREW 2" BRONZE CLOSE NIPPLE INTO BLIND FLANGE. SCREW 2" BRONZE BALL VALVE TO CLOSE NIPPLE. WRAP ALL THREADS WITH PTFE TAPE PRIOR TO ASSEMBLY. USE INTERNAL PIPE WRENCH ONLY. DO NOT DAMAGE PIPE THREADS.
2. BLIND FLANGE BOLTS SHALL BE TORQUED TO MEET MFR RECOMMENDATION. DO NOT OVERTIGHTEN.

CLEANOUT CAP

DETAIL B
N.T.S.

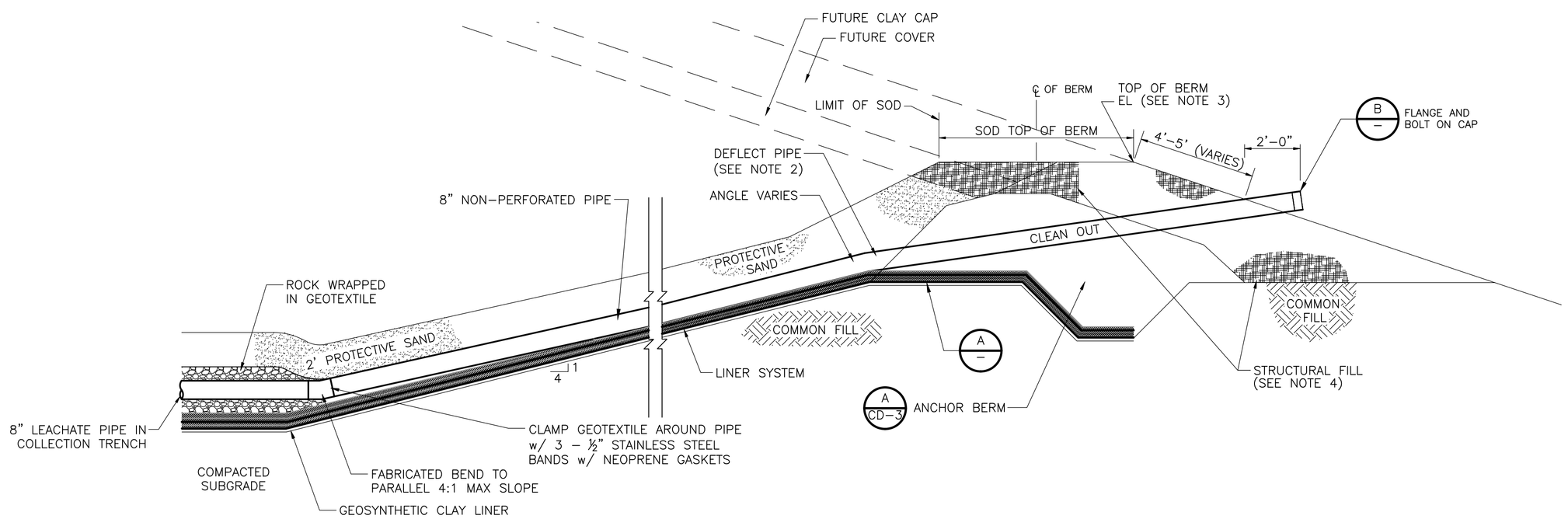

NOTES:

1. PROTECTIVE SAND TO BE PLACED WITHIN 1 FOOT OF LINER ANCHOR TRENCH AND FROM TOP OF BERM.
2. CLEANOUT PIPE, ANGLE OF DEFLECTION, SHALL BE ADJUSTED BY THE CONTRACTOR TO MEET A PENETRATION DISTANCE OF 4'–5' FROM TOP.
3. THE TOP OF BERM ELEVATIONS AT CLEANOUT LOCATIONS ARE SHOWN ON TABLE A ON SHEET C–5.
4. CLAY ANCHOR BERM SHALL BE PROTECTED WITH LOCAL STRUCTURAL FILL. FUTURE TIE IN OF CLAY CAP WITH CLAY ANCHOR BERM IS SHOWN ON DETAIL A, CD–3.

PERIMETER BERM LINER ANCHOR LAYERS/COLLECTION PIPE CLEANOUT

SECTION 1
1" = 3'–0"
C–10

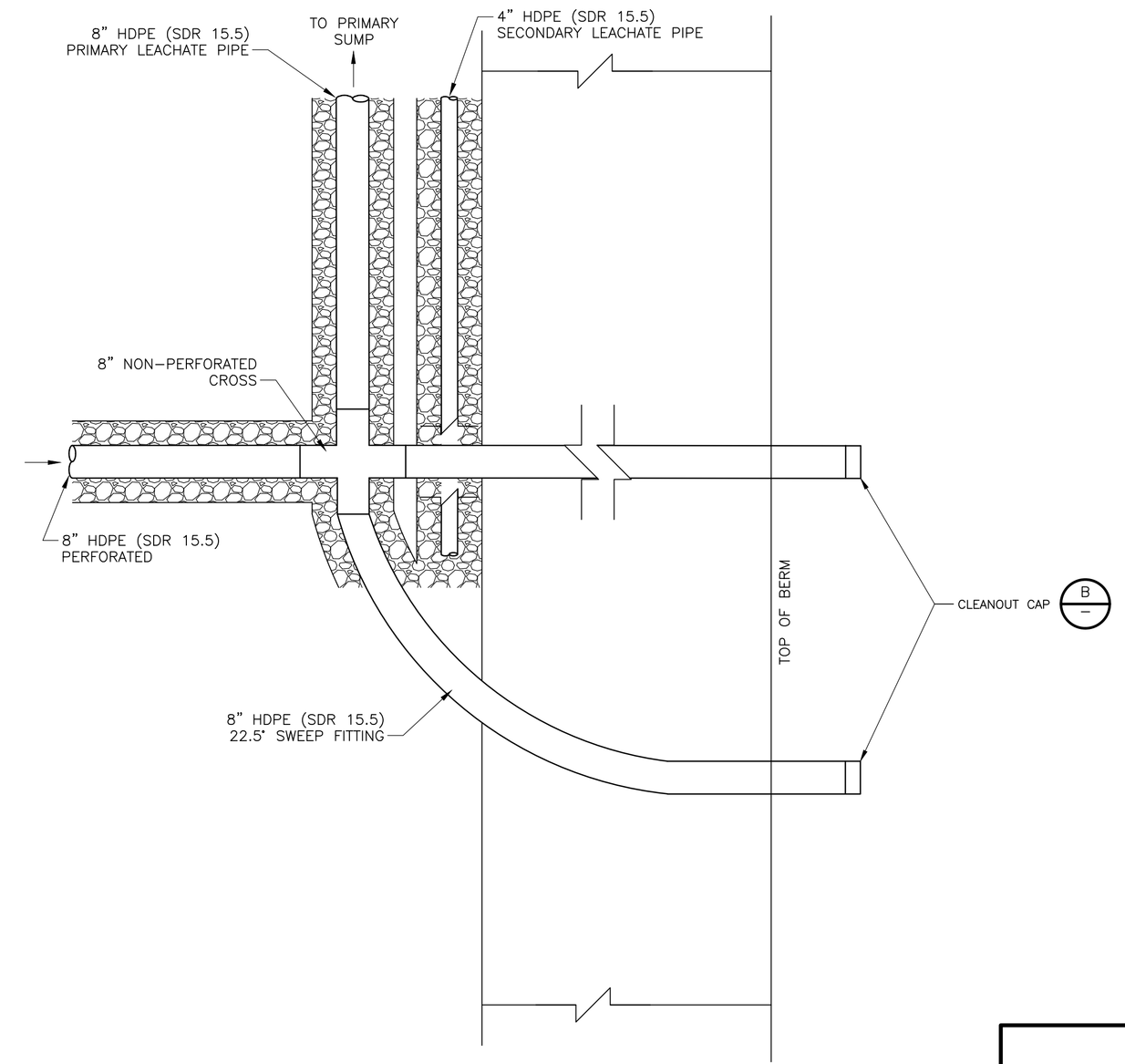

COLLECTION MANIFOLD CLEANOUT PIPING

DETAIL C
N.T.S.
C–10

JOHN G. LADNER
P.E. NO. 037969

REV. NO.	DATE	DRWN	CHKD	REMARKS

DESIGNED BY: R. KADAMBALA
DRAWN BY: B. CHAPMAN
SHEET CHK'D BY: J. HOFFMAN
CROSS CHK'D BY: A. MULLAH–SALEH
APPROVED BY: J. LADNER
DATE: AUG. 2013

CDM Smith
8381 Dix Ellis Trail., Suite 400
Jacksonville, Fl 32256
Tel: (904) 731-7109

CITY OF JACKSONVILLE

TRAIL RIDGE LANDFILL PHASES 6-14
CLASS 1 CELL EXPANSION

CIVIL DETAILS

PROJECT NO. 9012–80695
FILE NAME: CD01SDDT

SHEET NO.
CD-1

FOR PERMIT - NOT FOR CONSTRUCTION

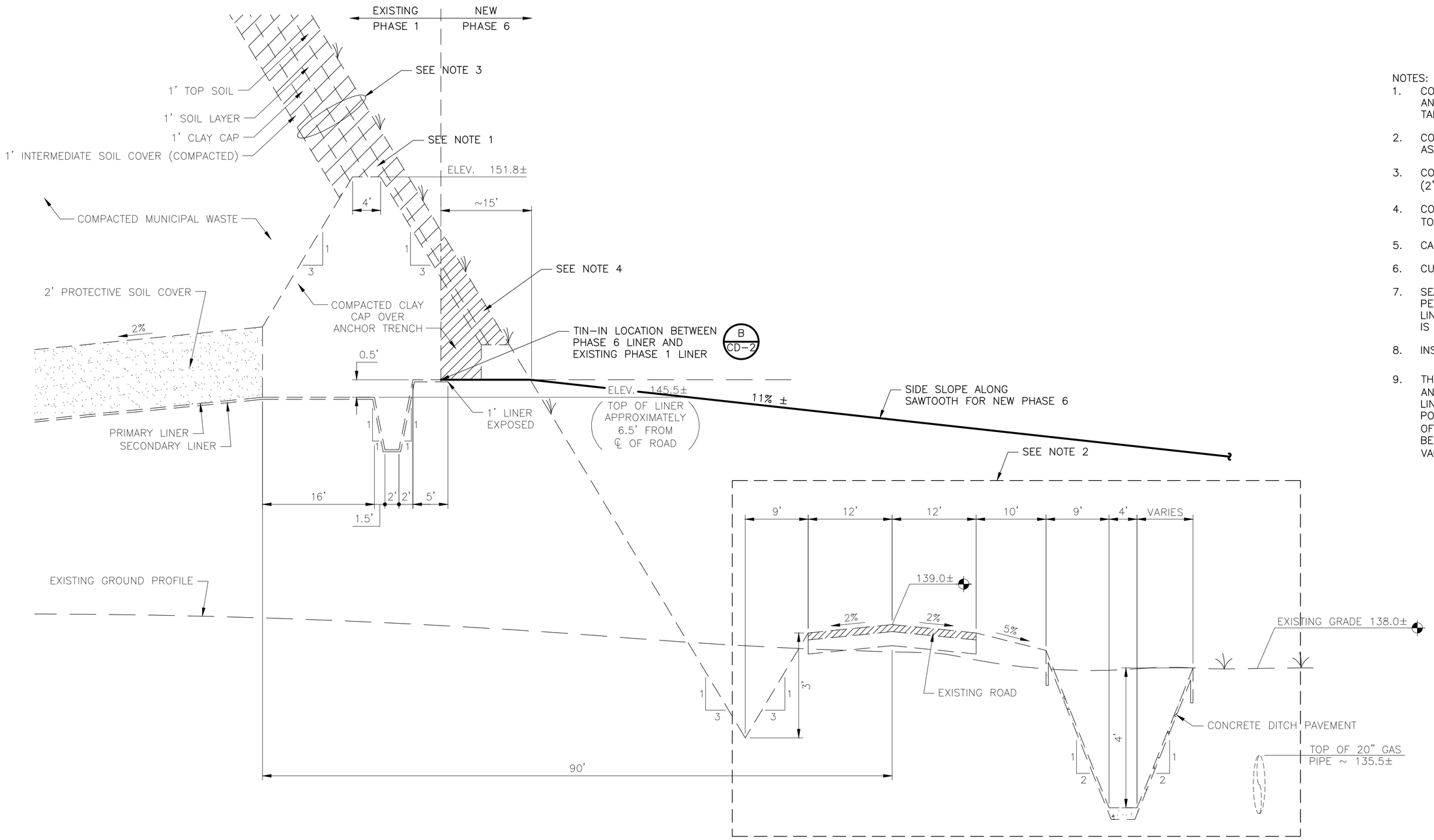

PHASE 6 TIE-IN WITH EXISTING PHASE 1 NORTH ANCHOR TRENCH

SECTION 1 / C-10

1" = 10' HORIZ.
1" = 2' VERT.

NOTES:

1. CONTRACTOR SHALL REFER TO APPROXIMATE TOP OF CLAY BERM (TAB) AND TOP OF SUBBASE ALONG THE ENTIRE NORTH ANCHOR TRENCH ON TABLE A ON SHEET C-5.
2. CONTRACTOR SHALL DEMO ALL EXISTING GAS PIPING, ROAD, CAP, CULVERTS AS SHOWN ON SHEET C-6 AND ERP-8 DRAWING.
3. CONTRACTOR SHALL REMOVE THE EXISTING CAP (2' OF PROTECTIVE SOIL COVER AND 1' OF CLAY BARRIER LAYER).
4. CONTRACTOR SHALL EXCAVATE A PORTION OF THE CLAY ANCHOR BERM TO EXPOSE 1' OF THE EXISTING MEMBRANE LINER.
5. CAREFULLY EXCAVATE TO LOCATE EXISTING LINER.
6. CUT EXISTING LINER SYSTEM AT ANCHOR TRENCH.
7. SEAM OLD LINERS FROM NORTH SIDE OF CELL 1 TO NEW LINER ON PHASE 6 PER DETAIL B ON SHEET CD-2. USE SANDBAGS OVER GEONET BETWEEN LINERS AND OVER PRIMARY LINER UNTIL TWO FOOT PROTECTIVE SAND LAYER IS IN PLACE.
8. INSTALL GEOCOMPOSITE OVER NEW PRIMARY LINER.
9. THE CONTRACTOR SHALL HAND EXCAVATE AND LOCATE THE EXISTING BERM AND THE EDGE OF THE EXISTING GEOCOMPOSITE/LINER, WHERE THE PROPOSED LINER WILL BE ATTACHED, AT 100 FOOT INTERVALS BEFORE PROCEEDING WITH POWER EQUIPMENT. POWER EQUIPMENT SHALL NOT BE USED WITHIN 10 INCHES OF THE EXISTING GEOCOMPOSITE/LINER. REMAINING 10 INCHES OF FILL SHALL BE REMOVED WITH HAND TOOLS. DAMAGED LINER SHALL BE REPAIRED AND VACUUM TESTED BY THE CONTRACTOR AT THE CONTRACTOR'S EXPENSE.

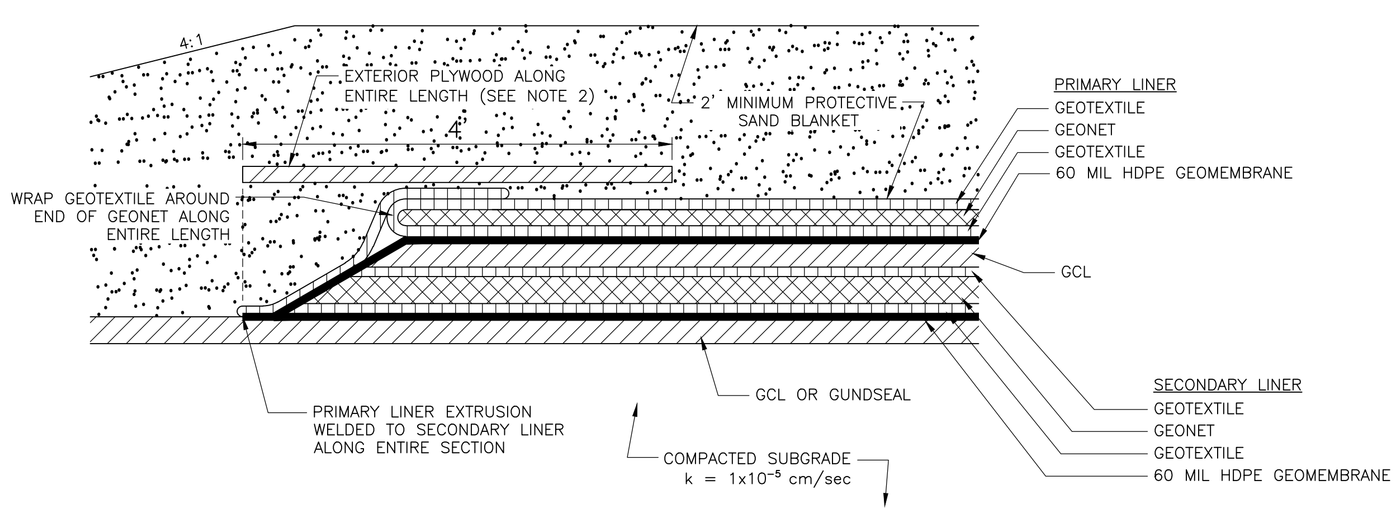

NOTES:

1. THICKNESS OF THE LINER SYSTEMS COMPONENTS HAVE BEEN EXAGGERATED FOR CLARITY PURPOSES ONLY.
2. PLYWOOD SHALL BE 3/4" THICK EXTERIOR GRADE PLYWOOD MEASURING 4'x8'.

TYPICAL PRIMARY AND SECONDARY LINER
END TREATMENT BETWEEN NORTH – SOUTH PHASES

DETAIL A / CD-4, CD-4A

NTS

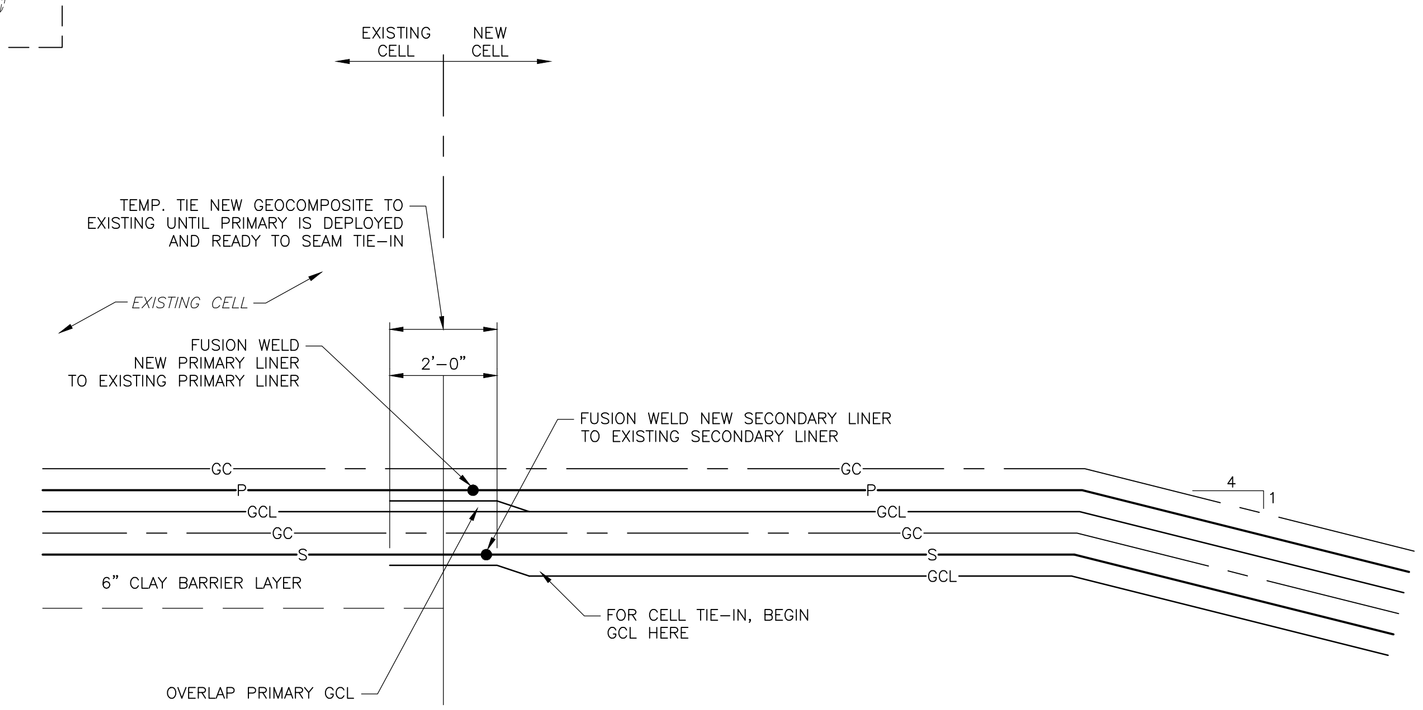

NOTES:

1. CONTRACTOR MUST USE SANDBAGS OR OTHER MEANS TO ASSURE THAT GEOCOMPOSITE BETWEEN LINERS DO NOT SHIFT AFTER INSTALLATION. USE SANDBAGS OR OTHER MEANS TO HOLD GEOCOMPOSITE UNTIL PRIMARY LINER AND PROTECTIVE SAND HAVE BEEN PLACED.

TIE-IN FOR LINER SYSTEMS
FOR ISOLATION OF PHASE 1 AND PHASE 6

DETAIL B / –

1" = 2'-0"

JOHN G. LADNER
P.E. NO. 037969

REV. NO.	DATE	DRWN	CHKD	REMARKS

DESIGNED BY: R. KADAMBALA
DRAWN BY: B. CHAPMAN
SHEET CHK'D BY: J. HOFFMAN
CROSS CHK'D BY: A. MULLA SALEH
APPROVED BY: J. LADNER
DATE: AUG. 2013

CDM Smith
8381 Dix Ellis Trail., Suite 400
Jacksonville, Fl 32256
Tel: (904) 731-7109

CITY OF JACKSONVILLE

TRAIL RIDGE LANDFILL PHASES 6-14
CLASS 1 CELL EXPANSION

CIVIL DETAILS II

PROJECT NO. 9012-80695
FILE NAME: CD02SDDT

SHEET NO.
CD-2

FOR PERMIT - NOT FOR CONSTRUCTION

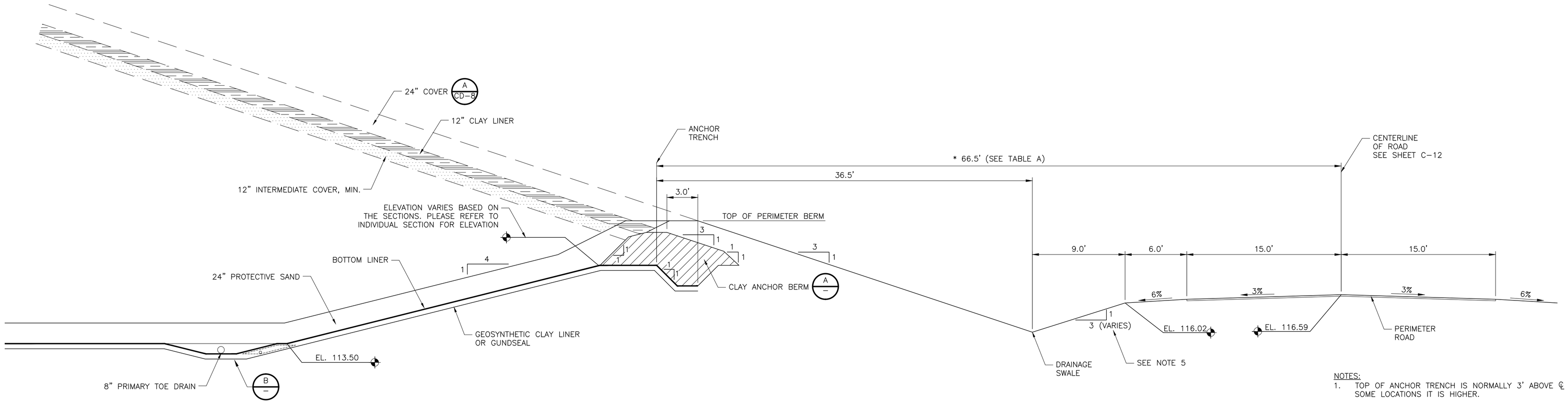

CLAY BERM/CAP OPTION CROSS SECTION – PHASE 6 (TYP)

SECTION 1 / CD-9

1" = 5'-0"

TABLE A — * DISTANCE FROM

DISTANCE ABOVE CENTERLINE OF ROAD (FEET)	CENTERLINE OF ROAD TO CLAY ANCHOR BERM
3	66.5
4	69.5
5	72.5
6	75.5

NOTES:

1. TOP OF ANCHOR TRENCH IS NORMALLY 3' ABOVE ℄ OF THE ROAD. IN SOME LOCATIONS IT IS HIGHER.
2. THE BREAK POINT IN THE BOTTOM LINER TO TRANSITION TO 4:1 SLOPE VARIES IN ELEVATION.
3. FOR CAP TIE-IN TO CLAY BERM, REMOVE FILL MATERIAL ON TOP OF CLAY BERM AND INSTALL CLAY CAP AS SHOWN ON DETAIL A.
4. THE ELEVATIONS SHOWN IN THESE SECTIONS CORRESPOND TO SECTION 4 ON C-12 (PHASE 6).
5. THE SIDE SLOPE BETWEEN THE EDGE OF SHOULDER AND BOTTOM OF DRAINAGE SWALE SHALL BE NO STEEPER THAN 3:1.

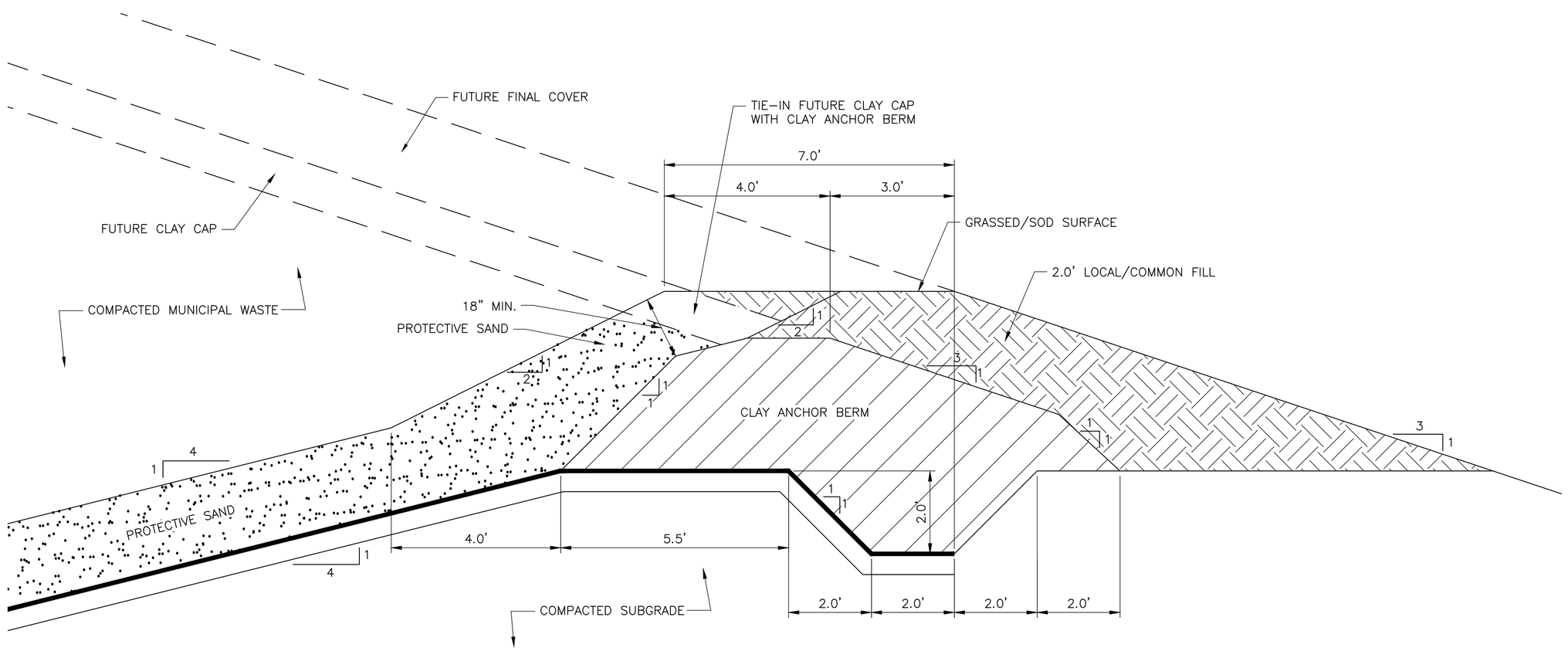

PERIMETER ANCHOR TRENCH

DETAIL A / –

1" = 2'-0"

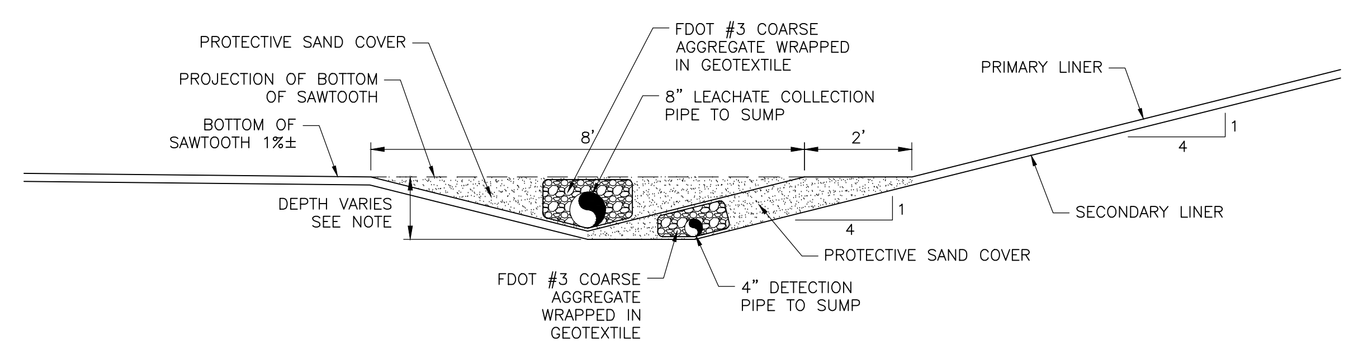

NOTES:

1. DEPTH OF PIPE INVERT BELOW PROJECTION OF BOTTOM OF SAWTOOTH VARIES FROM 0" AT HIGHPOINT TO 2'-6" AT SUMP.

TOE DRAIN (TYPICAL)

DETAIL B / –

1" = 2'-0"

JOHN G. LADNER
P.E. NO. 037969

REV. NO.	DATE	DRWN	CHKD	REMARKS

DESIGNED BY: R. KADAMBALA
DRAWN BY: B. CHAPMAN
SHEET CHK'D BY: J. HOFFMAN
CROSS CHK'D BY: I. POLEMATIDIS
APPROVED BY: J. LADNER
DATE: AUG. 2013

CDM Smith
8381 Dix Ellis Trail., Suite 400
Jacksonville, Fl 32256
Tel: (904) 731-7109

CITY OF JACKSONVILLE

TRAIL RIDGE LANDFILL PHASES 6-14
CLASS 1 CELL EXPANSION

CIVIL DETAILS III

PROJECT NO. 9012-80695
FILE NAME: CD03SDDT

SHEET NO.
CD-3

FOR PERMIT - NOT FOR CONSTRUCTION

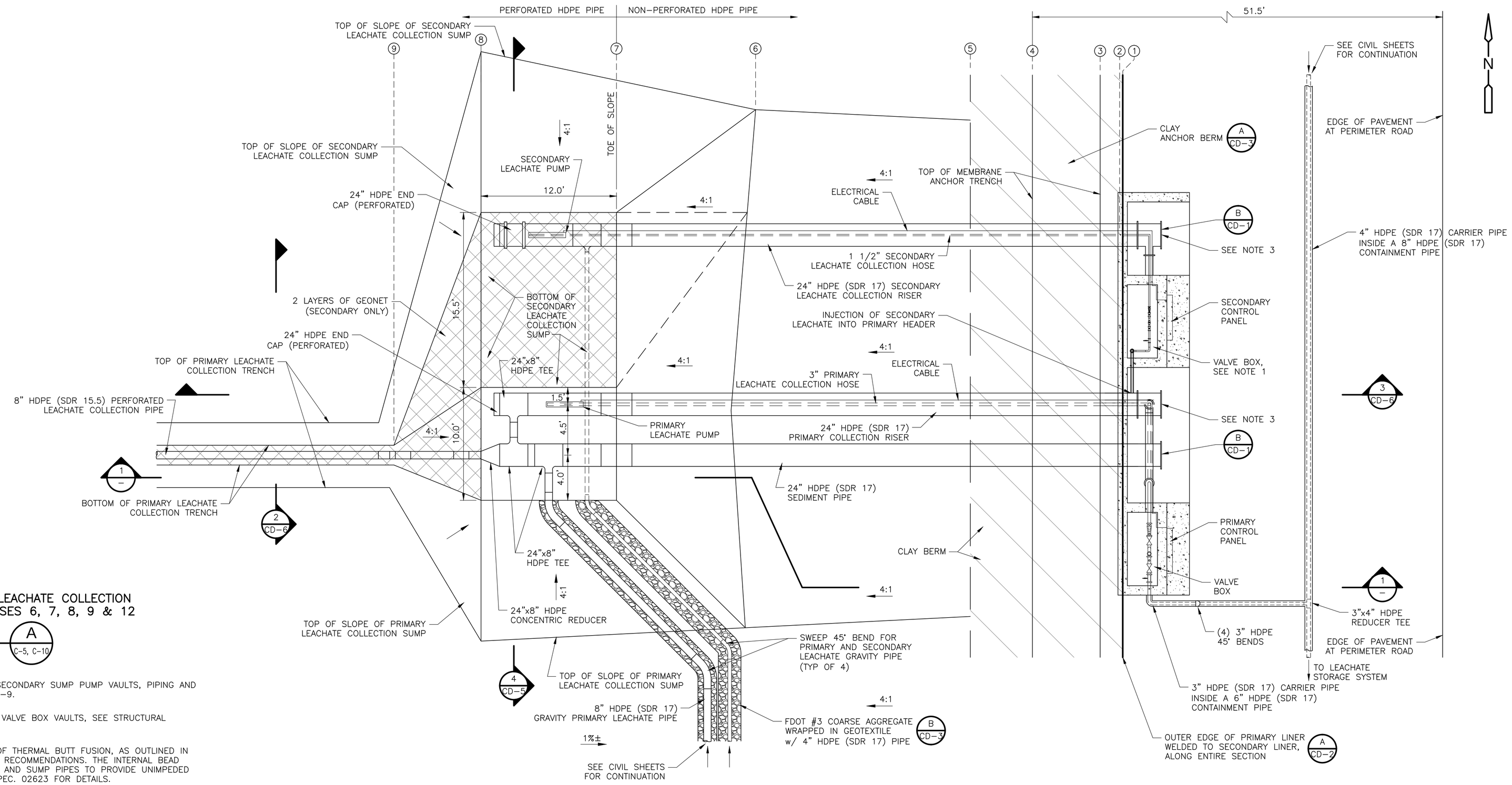

PRIMARY AND SECONDARY LEACHATE COLLECTION SYSTEM SUMP PLAN – PHASES 6, 7, 8, 9 & 12

DETAIL A (C-5, C-10)
1" = 5'-0"

NOTES:

1. FOR DETAILS ON THE PRIMARY AND SECONDARY SUMP PUMP VAULTS, PIPING AND FITTING DETAILS, SEE CIVIL DETAIL CD-9.
2. FOR STRUCTURAL DETAILS, ON PUMP VALVE BOX VAULTS, SEE STRUCTURAL SHEET S-2.
3. PIPE SHALL BE JOINED BY METHOD OF THERMAL BUTT FUSION, AS OUTLINED IN ASTM F2620 OR PER MANUFACTURER RECOMMENDATIONS. THE INTERNAL BEAD SHALL BE REMOVED FROM ALL RISER AND SUMP PIPES TO PROVIDE UNIMPEDED TRAVEL OF LEACHATE PUMPS. SEE SPEC. 02623 FOR DETAILS.

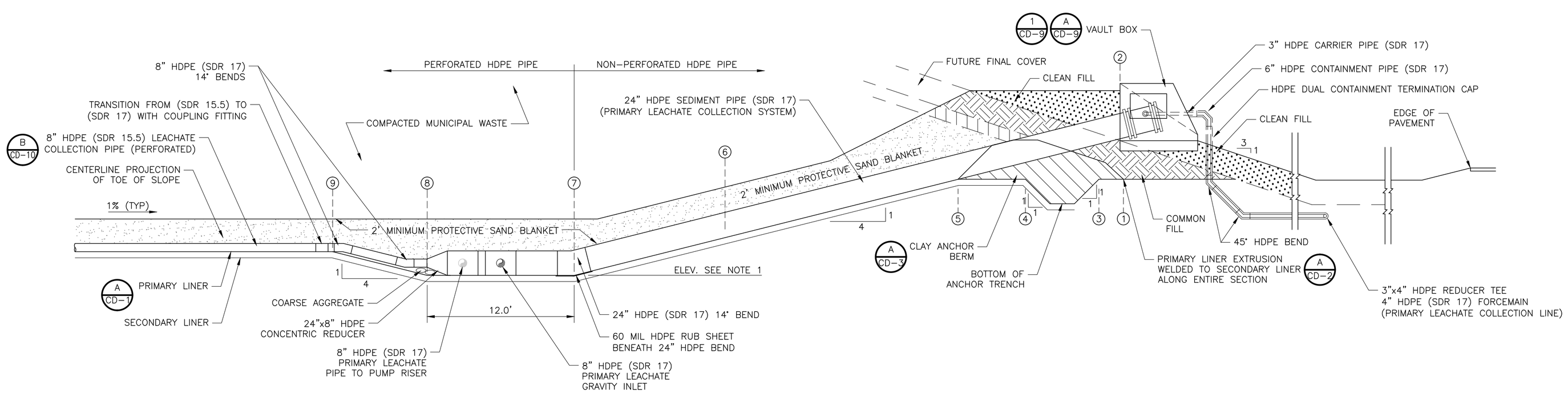

PRIMARY LEACHATE COLLECTION SYSTEM SUMP SECTION

SECTION 1
1" = 5'-0"

NOTES:

1. FOR PRIMARY SUMP ELEVATION, SEE SHEET C-5, TABLE A.

JOHN G. LADNER
P.E. NO. 037969

REV. NO.	DATE	DRWN	CHKD	REMARKS

DESIGNED BY: R. KADAMBALA
DRAWN BY: B. CHAPMAN
SHEET CHK'D BY: J. HOFFMAN
CROSS CHK'D BY: A. MULLA SALEH
APPROVED BY: J. LADNER
DATE: AUG. 2013

CDM Smith
8381 Dix Ellis Trail., Suite 400
Jacksonville, Fl 32256
Tel: (904) 731-7109

CITY OF JACKSONVILLE

TRAIL RIDGE LANDFILL PHASES 6-14
CLASS 1 CELL EXPANSION

CIVIL DETAILS - LEACHATE COLLECTION

PROJECT NO. 9012-80695
FILE NAME: CD04SDDT
SHEET NO.
CD-4

FOR PERMIT - NOT FOR CONSTRUCTION

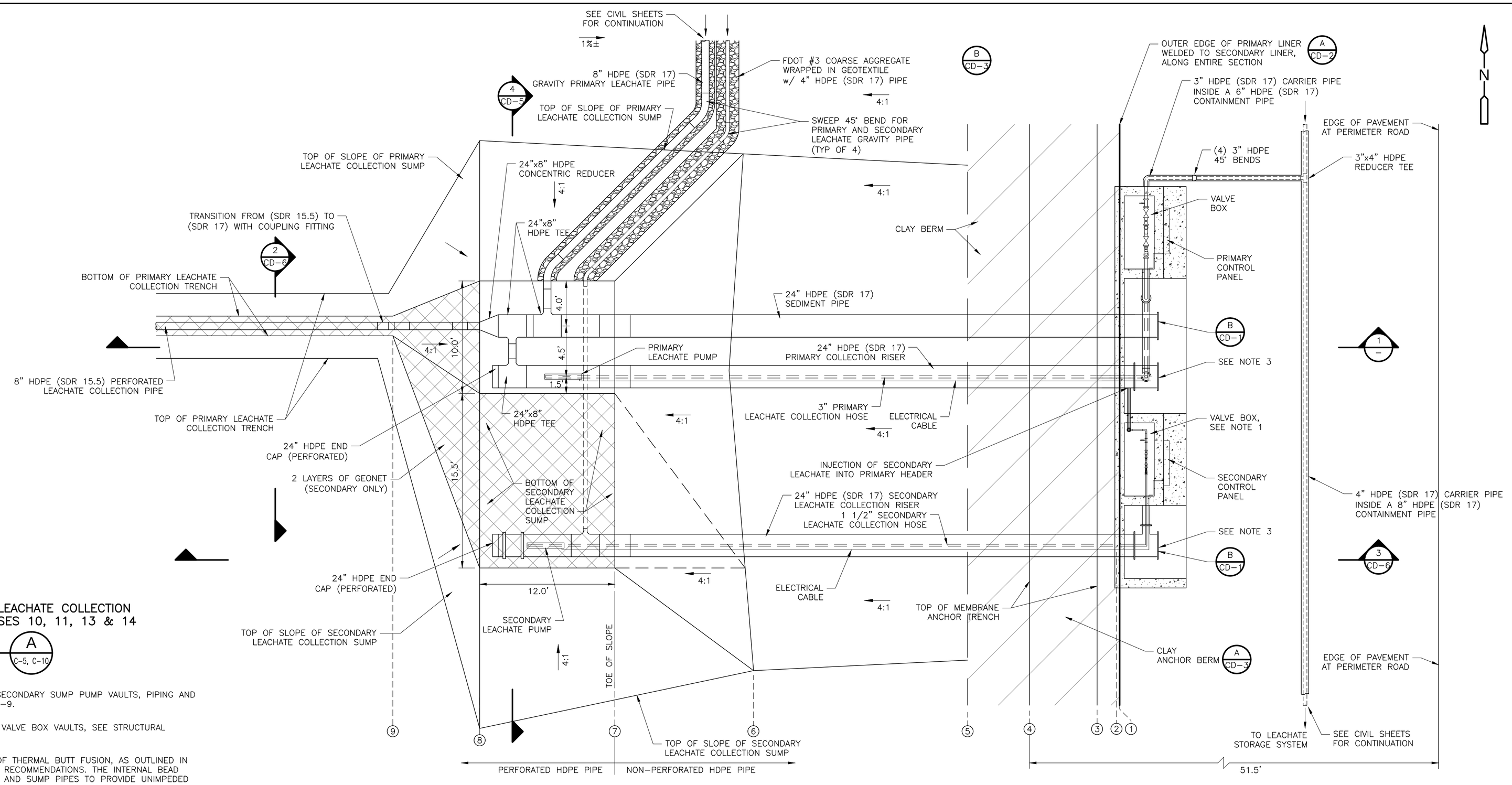

PRIMARY AND SECONDARY LEACHATE COLLECTION SYSTEM SUMP PLAN – PHASES 10, 11, 13 & 14

DETAIL A (C-5, C-10)
1" = 5'-0"

NOTES:

1. FOR DETAILS ON THE PRIMARY AND SECONDARY SUMP PUMP VAULTS, PIPING AND FITTING DETAILS, SEE CIVIL DETAIL CD-9.
2. FOR STRUCTURAL DETAILS, ON PUMP VALVE BOX VAULTS, SEE STRUCTURAL SHEET S-2.
3. PIPE SHALL BE JOINED BY METHOD OF THERMAL BUTT FUSION, AS OUTLINED IN ASTM F2620 OR PER MANUFACTURER RECOMMENDATIONS. THE INTERNAL BEAD SHALL BE REMOVED FROM ALL RISER AND SUMP PIPES TO PROVIDE UNIMPEDED TRAVEL OF LEACHATE PUMPS. SEE SPEC. 02623 FOR DETAILS.

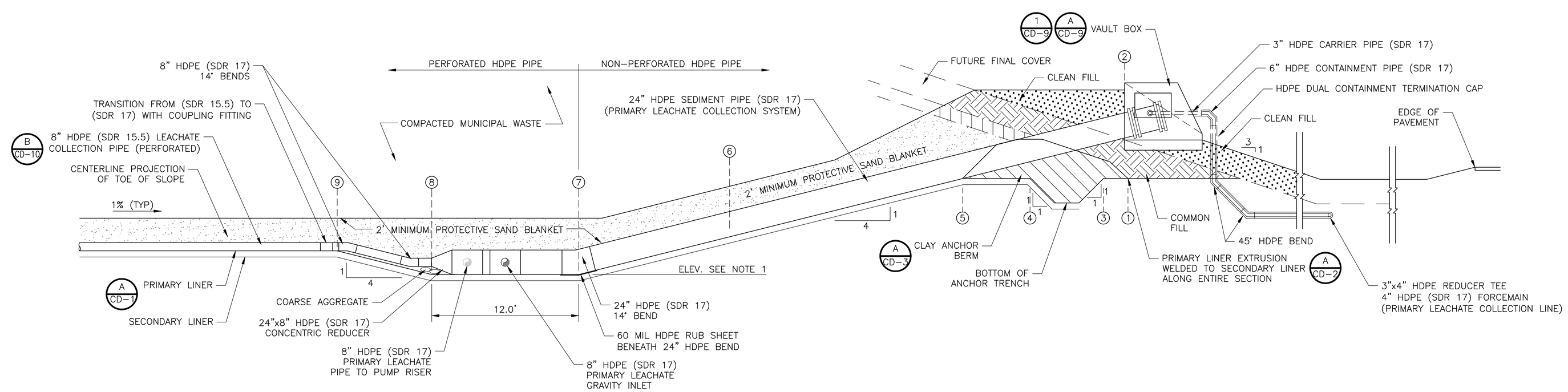

PRIMARY LEACHATE COLLECTION SYSTEM SUMP SECTION

SECTION 1 (–)
1" = 5'-0"

NOTES:

1. FOR PRIMARY SUMP ELEVATION, SEE SHEET C-5, TABLE A.

JOHN G. LADNER
P.E. NO. 037969

REV. NO.	DATE	DRWN	CHKD	REMARKS

DESIGNED BY: R. KADAMBALA
DRAWN BY: B. CHAPMAN
SHEET CHK'D BY: J. HOFFMAN
CROSS CHK'D BY: A. MULLA SALEH
APPROVED BY: J. LADNER
DATE: AUG. 2013

CDM Smith
8381 Dix Ellis Trail., Suite 400
Jacksonville, Fl 32256
Tel: (904) 731-7109

CITY OF JACKSONVILLE

TRAIL RIDGE LANDFILL PHASES 6-14
CLASS 1 CELL EXPANSION

CIVIL DETAILS - LEACHATE COLLECTION

PROJECT NO. 9012-80695
FILE NAME: CD04ASDDT
SHEET NO.
CD-4A

FOR PERMIT - NOT FOR CONSTRUCTION

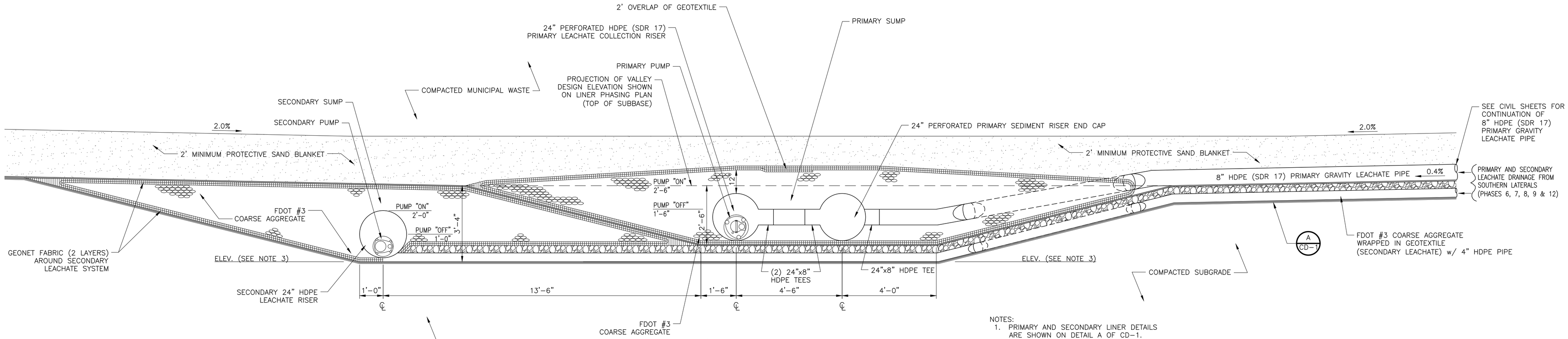

PRIMARY / SECONDARY LEACHATE COLLECTION SUMP SECTION – PHASES 6, 7, 8, 9 & 12

SECTION 4 (CD-4)

1" = 2'-0"

NOTES:
1. PRIMARY AND SECONDARY LINER DETAILS ARE SHOWN ON DETAIL A OF CD-1.
2. CONTRACTOR SHALL ROUTE SECONDARY TOE DRAIN NEAR THE TOE OF SLOPE.
3. FOR ELEVATIONS OF ALL PRIMARY AND SECONDARY SUMPS, SEE TABLE A ON SHEET C-5.

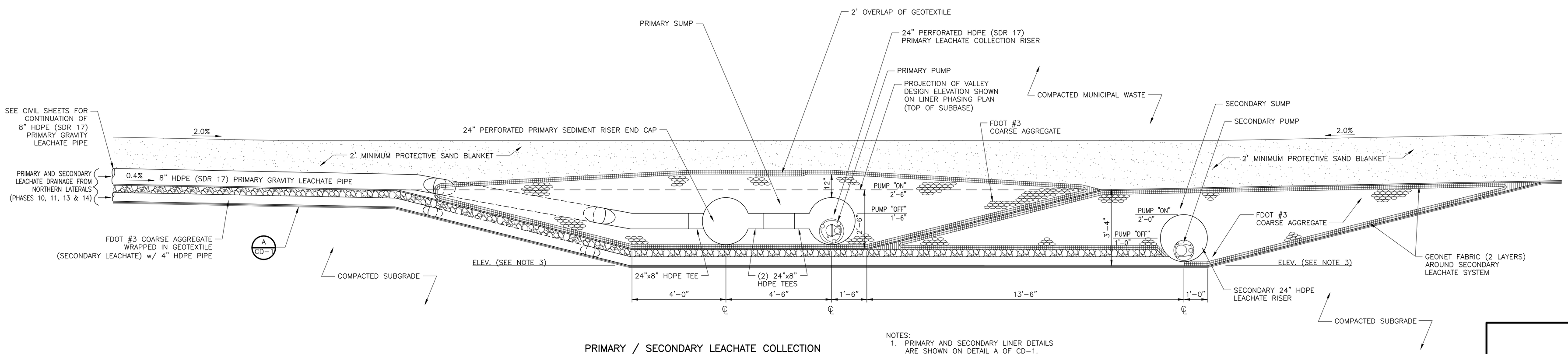

PRIMARY / SECONDARY LEACHATE COLLECTION SUMP SECTION – PHASES 10, 11, 13 & 14

SECTION 4 (CD-4A)

1" = 2'-0"

NOTES:
1. PRIMARY AND SECONDARY LINER DETAILS ARE SHOWN ON DETAIL A OF CD-1.
2. CONTRACTOR SHALL ROUTE SECONDARY TOE DRAIN NEAR THE TOE OF SLOPE.
3. FOR ELEVATIONS OF ALL PRIMARY AND SECONDARY SUMPS, SEE TABLE A ON SHEET C-5.

JOHN G. LADNER
P.E. NO. 037969

REV. NO.	DATE	DRWN	CHKD	REMARKS

DESIGNED BY: R. KADAMBALA
DRAWN BY: B. CHAPMAN
SHEET CHK'D BY: J. HOFFMAN
CROSS CHK'D BY: A. MULLAH-SALEH
APPROVED BY: J. LADNER
DATE: AUG. 2013

CDM Smith
8381 Dix Ellis Trail., Suite 400
Jacksonville, Fl 32256
Tel: (904) 731-7109

CITY OF JACKSONVILLE

TRAIL RIDGE LANDFILL PHASES 6-14
CLASS 1 CELL EXPANSION

CIVIL DETAILS - LEACHATE COLLECTION

PROJECT NO. 9012-80695
FILE NAME: CD05SDDT

SHEET NO.
CD-5

FOR PERMIT - NOT FOR CONSTRUCTION

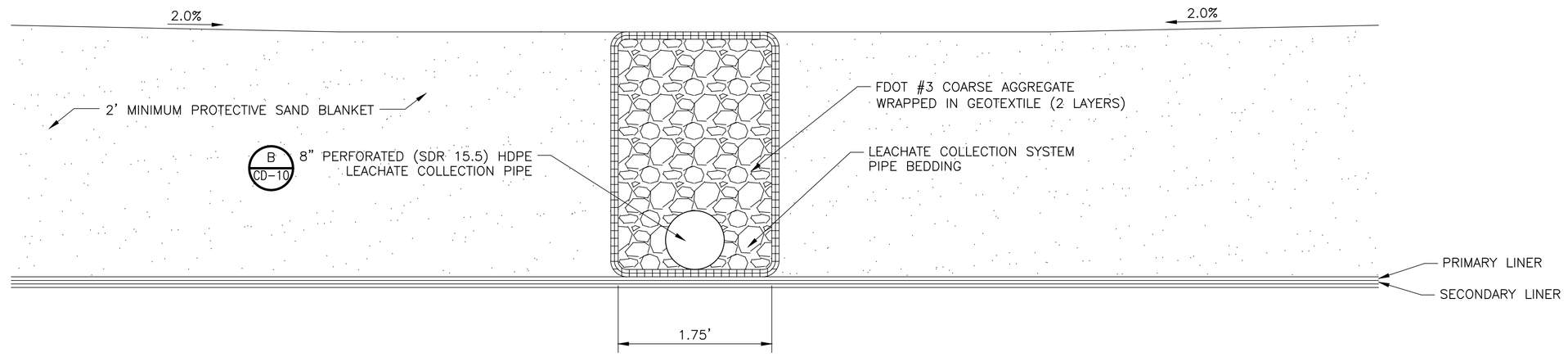

LEACHATE COLLECTION DETECTION – ALL PHASES

SECTION 2 (CD-4, CD-4A)

1" = 1'-0"

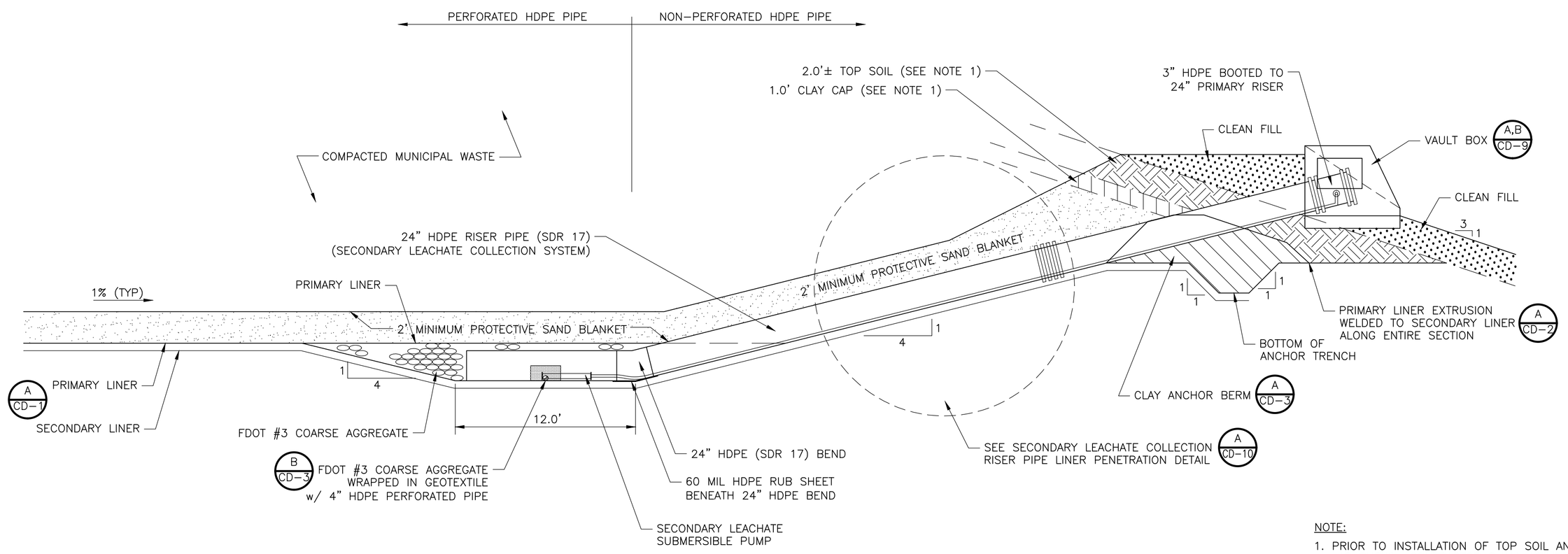

NOTE:

1. PRIOR TO INSTALLATION OF TOP SOIL AND CLAY CAP, AS SHOWN, CONTRACTOR SHALL UTILIZE CLEAN STRUCTURAL FILL, ACCORDINGLY.

SECONDARY LEACHATE COLLECTION
SYSTEM SUMP SECTION PHASES ALL PHASES

SECTION 3 (CD-4, CD-4A)

1" = 5'-0"

REV. NO.	DATE	DRWN	CHKD	REMARKS

DESIGNED BY: R. KADAMBALA
DRAWN BY: B. CHAPMAN
SHEET CHK'D BY: J. HOFFMAN
CROSS CHK'D BY: A. MULLAH-SALEH
APPROVED BY: J. LADNER
DATE: AUG. 2013

CDM Smith
8381 Dix Ellis Trail., Suite 400
Jacksonville, Fl 32256
Tel: (904) 731-7109

CITY OF JACKSONVILLE

TRAIL RIDGE LANDFILL PHASES 6-14
CLASS 1 CELL EXPANSION

CIVIL DETAILS - LEACHATE COLLECTION

PROJECT NO. 9012-80695
FILE NAME: CD06SDDT

SHEET NO.
CD-6

FOR PERMIT - NOT FOR CONSTRUCTION

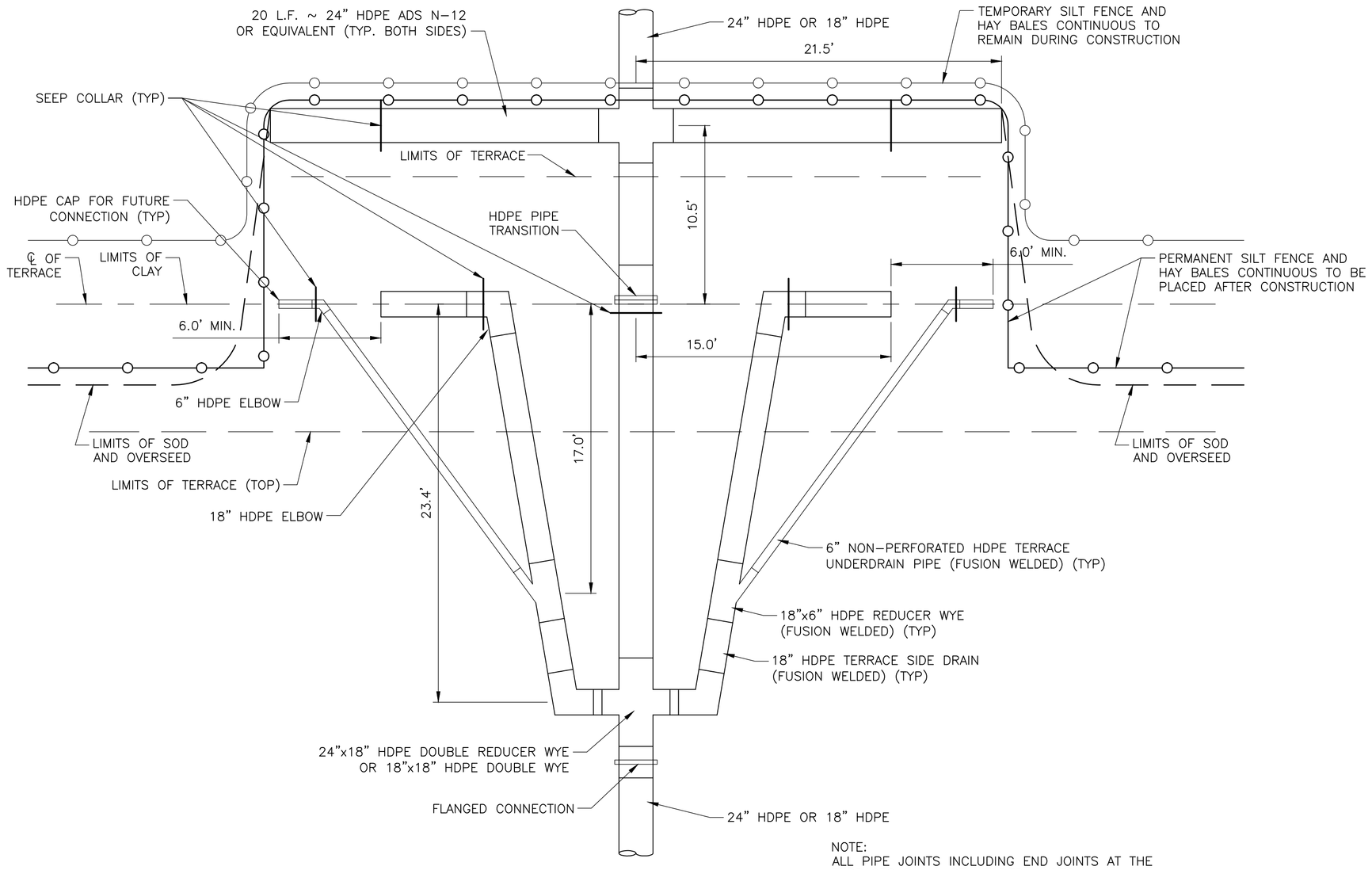

NOTE:
ALL PIPE JOINTS INCLUDING END JOINTS AT THE TERRACES SHALL BE WELDED JOINTS.

PLAN VIEW

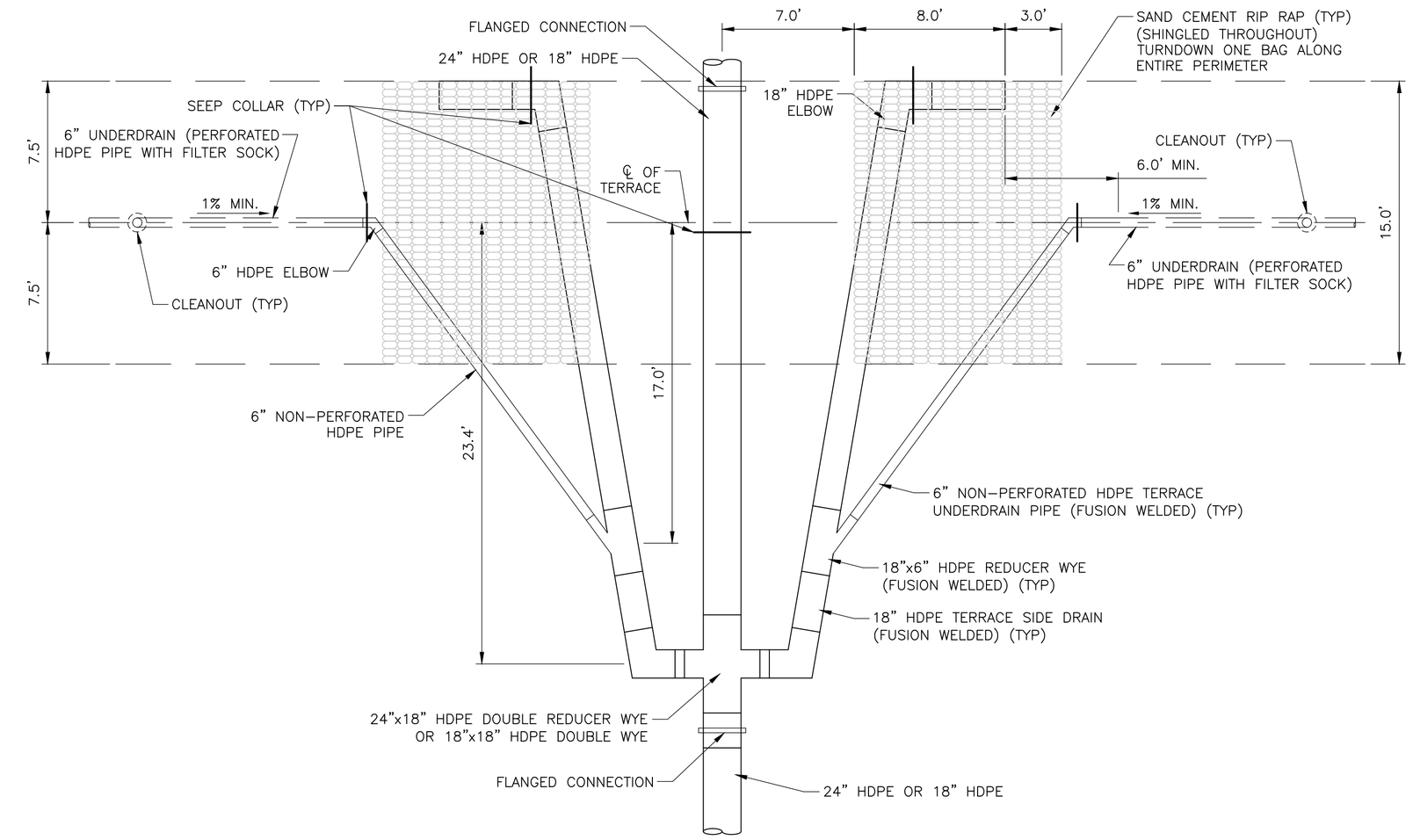

NOTE:
ALL PIPE JOINTS INCLUDING END JOINTS AT THE TERRACES SHALL BE WELDED JOINTS.

PLAN VIEW

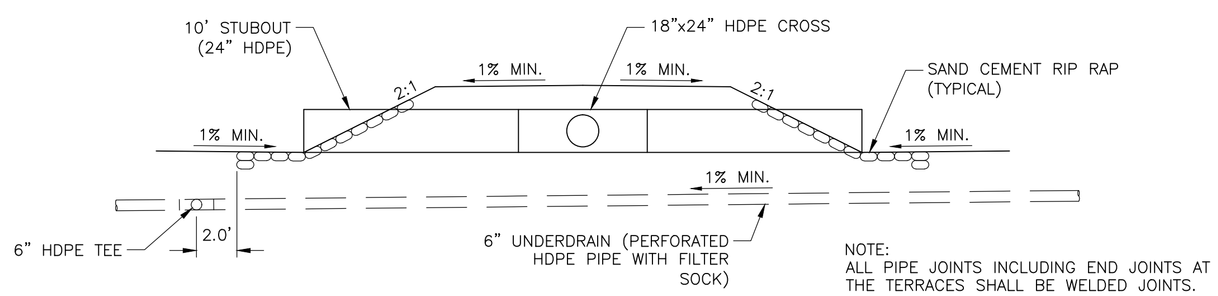

NOTE:
ALL PIPE JOINTS INCLUDING END JOINTS AT THE TERRACES SHALL BE WELDED JOINTS.

SECTION VIEW

TOP TERRACE PIPING

DETAIL A
NTS

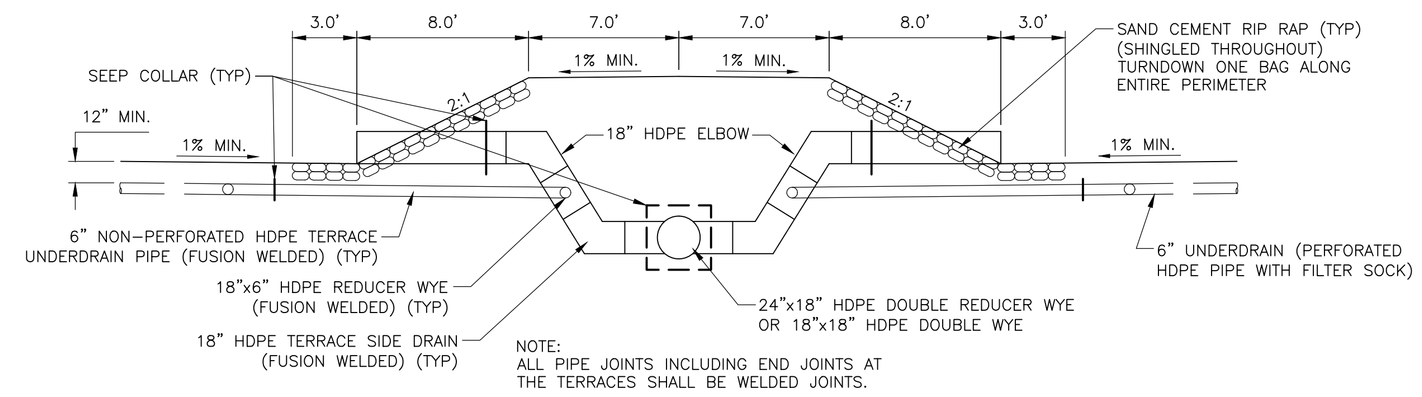

NOTE:
ALL PIPE JOINTS INCLUDING END JOINTS AT THE TERRACES SHALL BE WELDED JOINTS.

SECTION VIEW

INTERMEDIATE TERRACE PIPING

DETAIL B
NTS

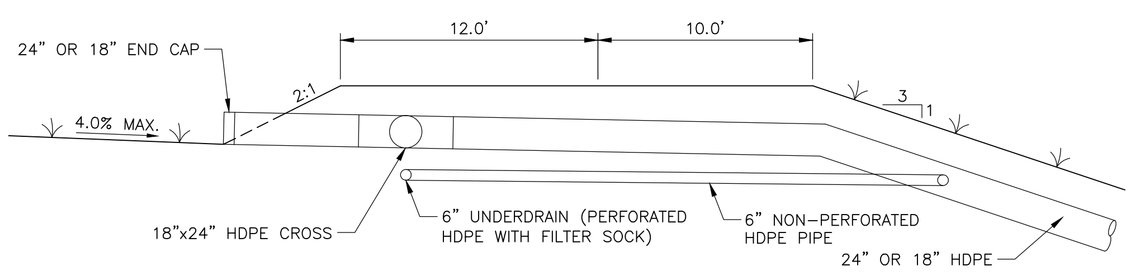

NOTE:
ALL PIPE JOINTS INCLUDING END JOINTS AT THE TERRACES SHALL BE WELDED JOINTS.

TOP TERRACE PIPING DETAIL

DETAIL D
1" = 5'

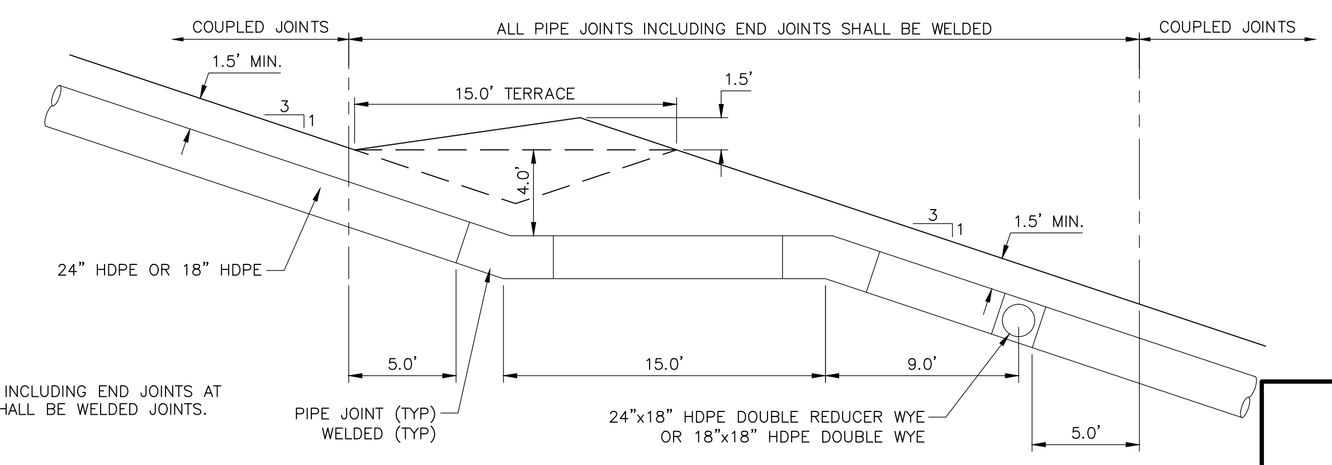

NOTE:
ALL PIPE JOINTS INCLUDING END JOINTS AT THE TERRACES SHALL BE WELDED JOINTS.

INTERMEDIATE TERRACE PIPING DETAIL

DETAIL C
1" = 5'

JOHN G. LADNER
P.E. NO. 037969

REV. NO.	DATE	DRWN	CHKD	REMARKS

DESIGNED BY: R. KADAMBALA
DRAWN BY: B. CHAPMAN
SHEET CHK'D BY: J. HOFFMAN
CROSS CHK'D BY: A. MULLA SALEH
APPROVED BY: J. LADNER
DATE: AUG. 2013

CDM Smith
8381 Dix Ellis Trail., Suite 400
Jacksonville, Fl 32256
Tel: (904) 731-7109

CITY OF JACKSONVILLE

TRAIL RIDGE LANDFILL PHASES 6-14
CLASS 1 CELL EXPANSION

CIVIL DETAILS - CLOSURE

PROJECT NO. 9012-80695
FILE NAME: CD07SDDT

SHEET NO.
CD-7

FOR PERMIT - NOT FOR CONSTRUCTION

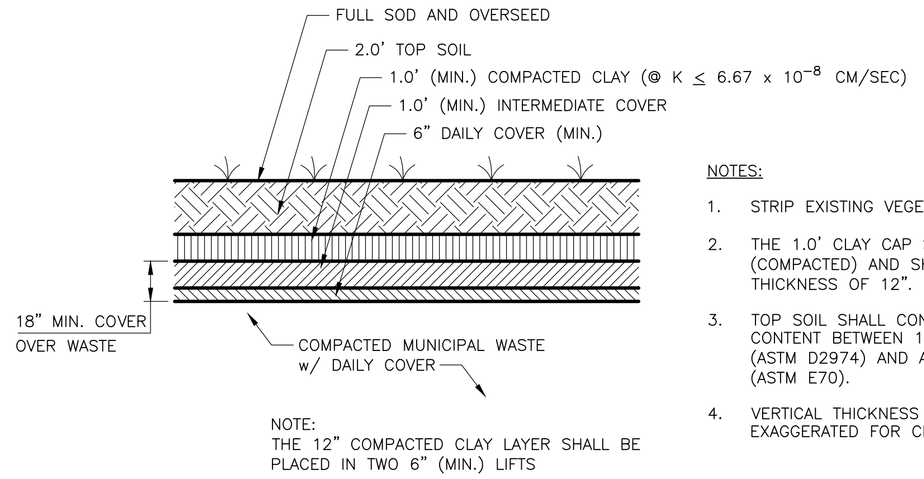

NOTE:
THE 12" COMPACTED CLAY LAYER SHALL BE PLACED IN TWO 6" (MIN.) LIFTS

NOTES:

1. STRIP EXISTING VEGETATION. ADD COMMON FILL AS NEEDED.
2. THE 1.0' CLAY CAP SHALL BE PLACED IN TWO 6" LIFTS (COMPACTED) AND SHALL HAVE A MINIMUM OVERALL THICKNESS OF 12".
3. TOP SOIL SHALL CONSIST OF SOIL WITH AN ORGANICS CONTENT BETWEEN 1.5 PERCENT AND 10.0 PERCENT (ASTM D2974) AND A pH VALUE BETWEEN 5.0 AND 7.0 (ASTM E70).
4. VERTICAL THICKNESS OF THE LINER SYSTEMS HAVE BEEN EXAGGERATED FOR CLARITY PURPOSES ONLY.

FINAL COVER – SIDE SLOPE UNIT

DETAIL A
NTS –

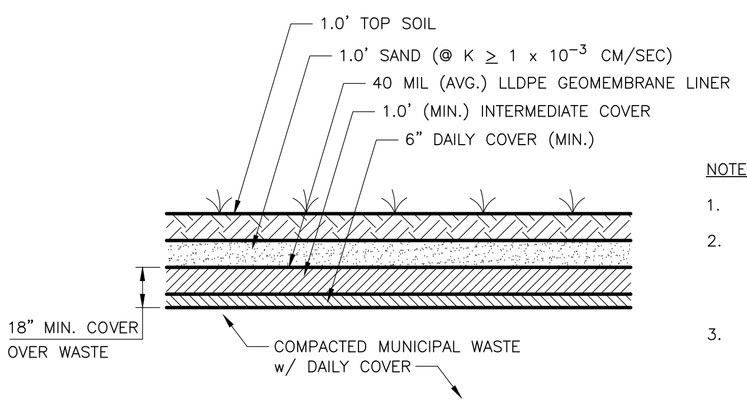

NOTES:

1. STRIP EXISTING VEGETATION. ADD COMMON FILL AS NEEDED.
2. TOP SOIL SHALL CONSIST OF SOIL WITH AN ORGANICS CONTENT BETWEEN 1.5 PERCENT AND 10.0 PERCENT (ASTM D2974) AND A pH VALUE BETWEEN 5.0 AND 7.0 (ASTM E70).
3. VERTICAL THICKNESS OF THE LINER SYSTEMS HAVE BEEN EXAGGERATED FOR CLARITY PURPOSES ONLY.

FINAL COVER – TOP SLOPE

DETAIL B
NTS –

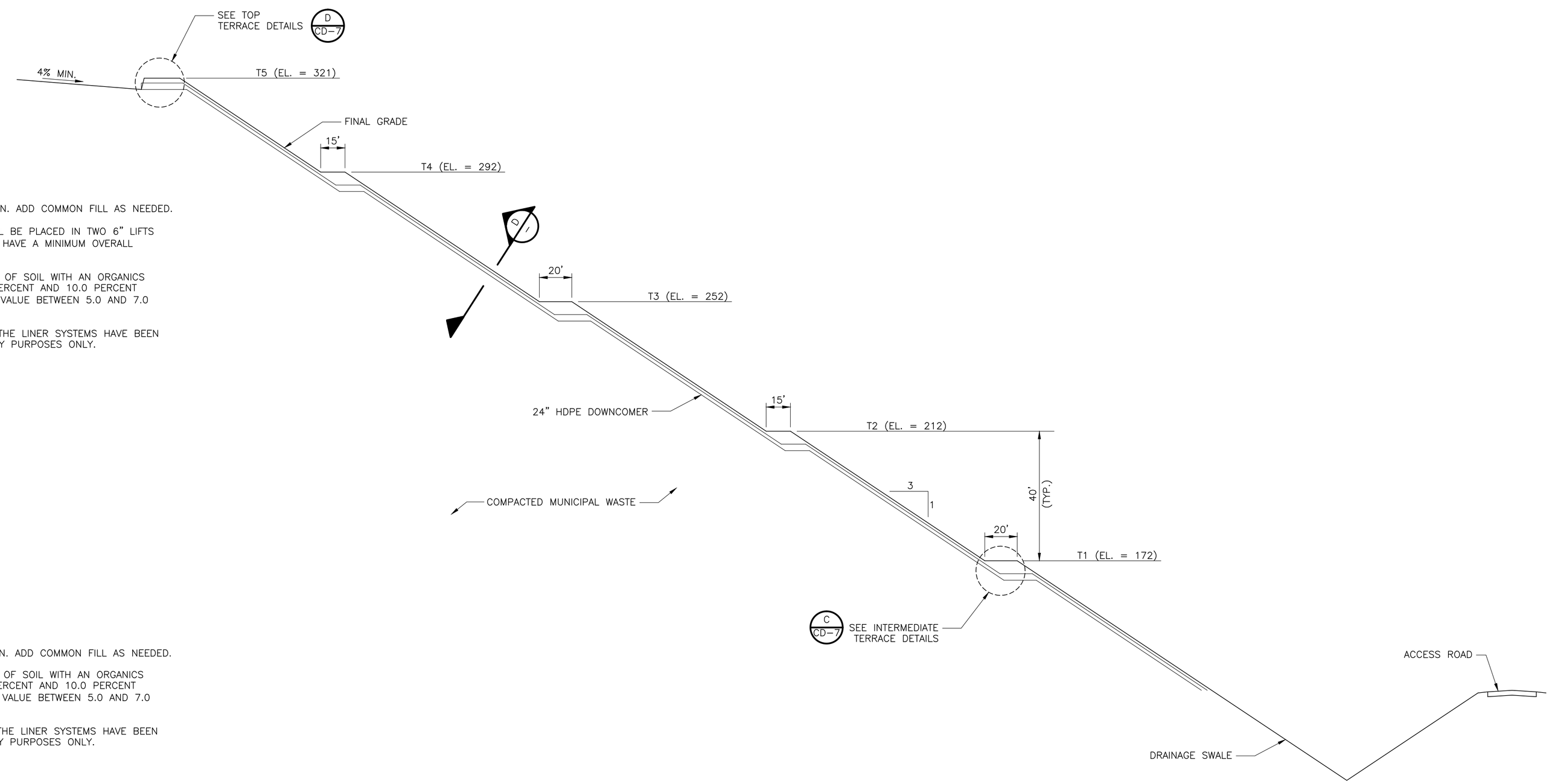

SIDE SLOPE

SECTION 1
1" = 40' HORIZ.
1" = 20' VERT. –

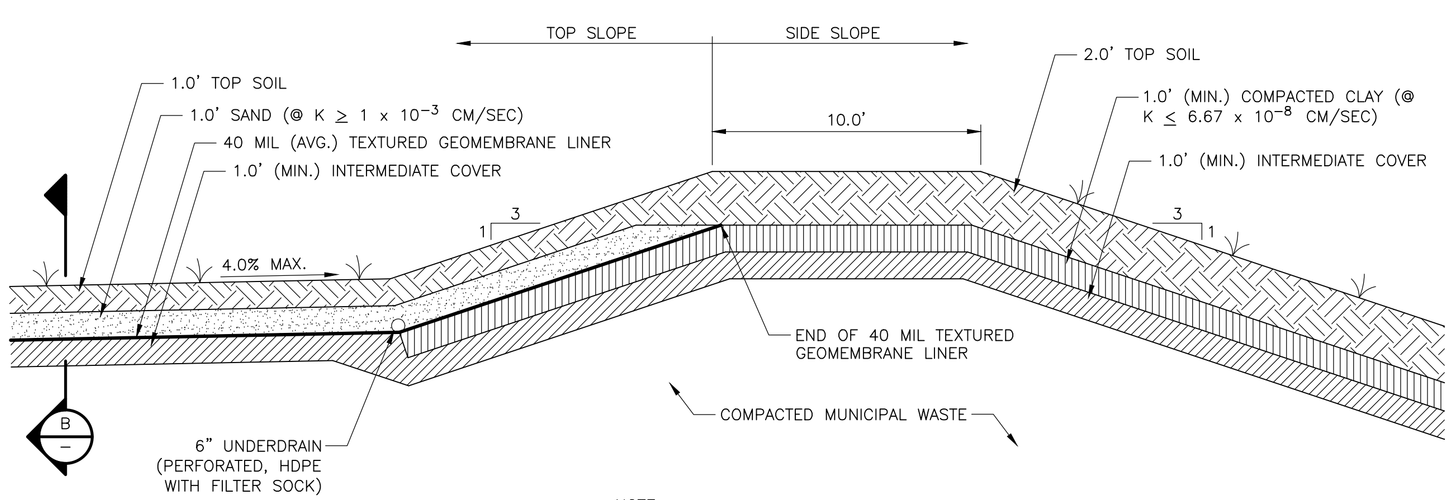

NOTE:
THE 12" COMPACTED CLAY LAYER SHALL BE PLACED IN TWO 6" (MIN.) LIFTS

TOP TERRACE BERM – TYPICAL CROSS SECTION

DETAIL C
NTS –

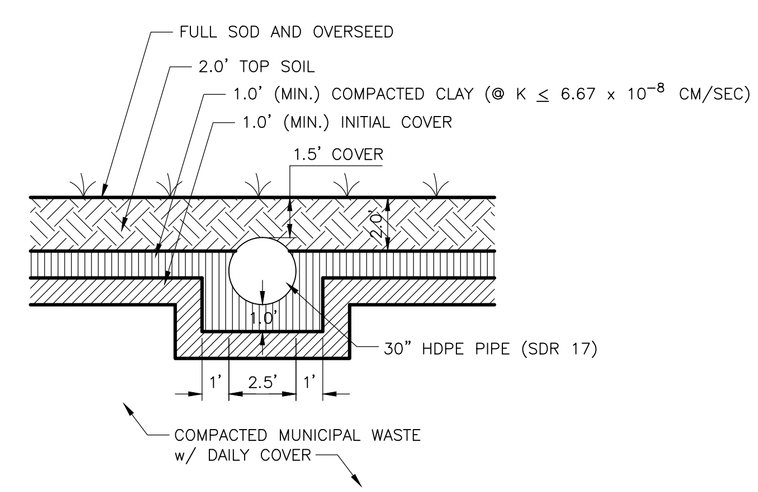

NOTE:
THE COMPACTED CLAY LAYER SHALL BE PLACED IN TWO 6" (MIN.) LIFTS

TYPICAL PIPE ENCASEMENT SECTION

DETAIL D
NTS –

JOHN G. LADNER
P.E. NO. 037969

REV. NO.	DATE	DRWN	CHKD	REMARKS

DESIGNED BY: R. KADAMBALA
DRAWN BY: B. CHAPMAN
SHEET CHK'D BY: J. HOFFMAN
CROSS CHK'D BY: A. MULLA SALEH
APPROVED BY: J. LADNER
DATE: AUG. 2013

CDM Smith
8381 Dix Ellis Trail., Suite 400
Jacksonville, Fl 32256
Tel: (904) 731-7109

CITY OF JACKSONVILLE

TRAIL RIDGE LANDFILL PHASES 6-14
CLASS 1 CELL EXPANSION

CIVIL DETAILS - CLOSURE

PROJECT NO. 9012-80695
FILE NAME: CD08SDDT

SHEET NO.
CD-8

FOR PERMIT - NOT FOR CONSTRUCTION

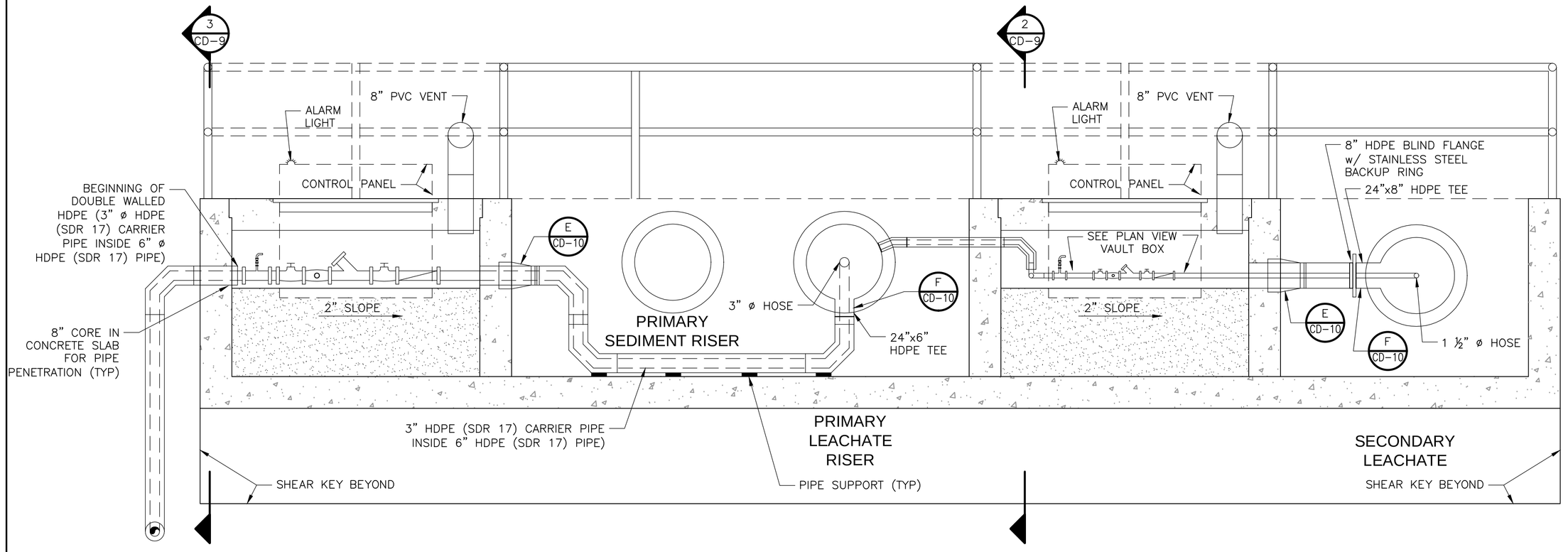

NOTES:
1. THE 18-INCH RISER PIPES FROM THE PRIMARY AND SECONDARY PIPES SHALL BE FIELD ADJUSTED TO MEET FIELD CONDITIONS.
2. PRIOR TO THE COMPLETION OF FORMWORK AND PLACEMENT OF CONCRETE, THE ENGINEER SHALL INSPECT AND APPROVE THE CONFIGURATION OF THE VAULT BOX.
3. CONTRACTOR SHALL TEST FORCEMAINS IN ACCORDANCE TO THE SPECIFICATIONS.
4. CONTRACTOR SHALL PROVIDE ALL NECESSARY SIGNAGE AS NEEDED FOR THE PUMP STATION AND AS SPECIFIED IN THE SPECIFICATIONS.
5. CONTRACTOR SHALL PROVIDE NECESSARY PUMP CONTROL PANELS AS SHOWN ON THE ELECTRICAL DRAWINGS.
6. VAULT BOX DETAIL FOR PHASES 10, 11, 13 & 14 ARE A MIRROR IMAGE FROM WHAT IS SHOWN ON SECTION 1.
7. FOR STRUCTURAL DIMENSIONS OF VAULT BOX, SEE STRUCTURAL SHEET S-2.

SECTION VIEW
PHASES 6, 7, 8, 9 & 12 VAULT BOX DETAIL (1 / CD-5)
1/2" = 1'-0"

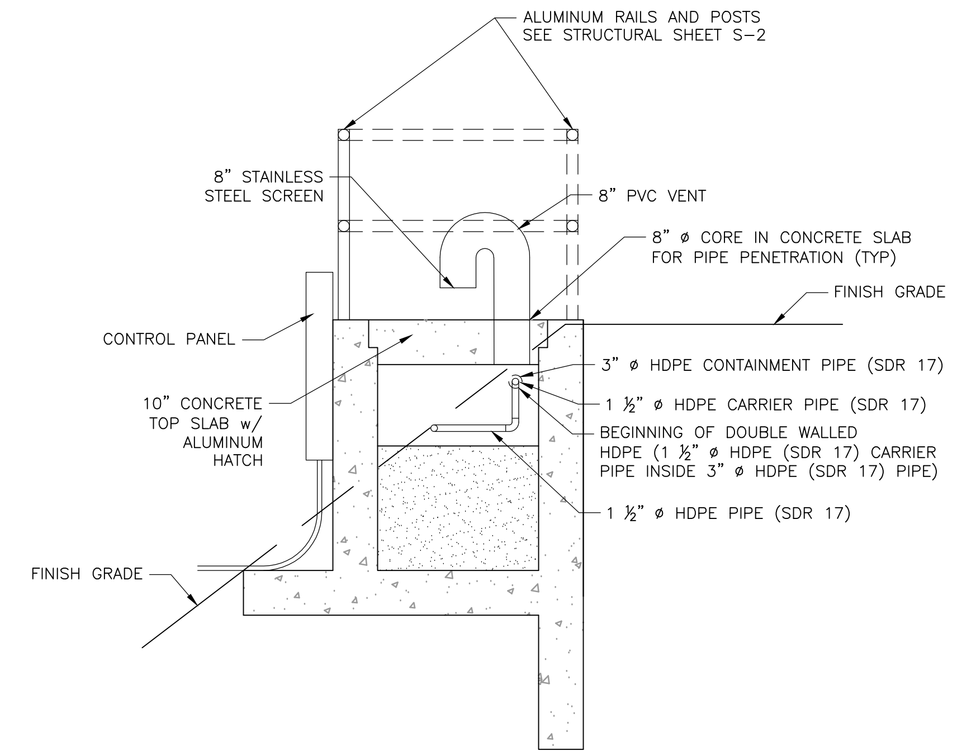

SECTION (2 / -)
1/2" = 1'-0"

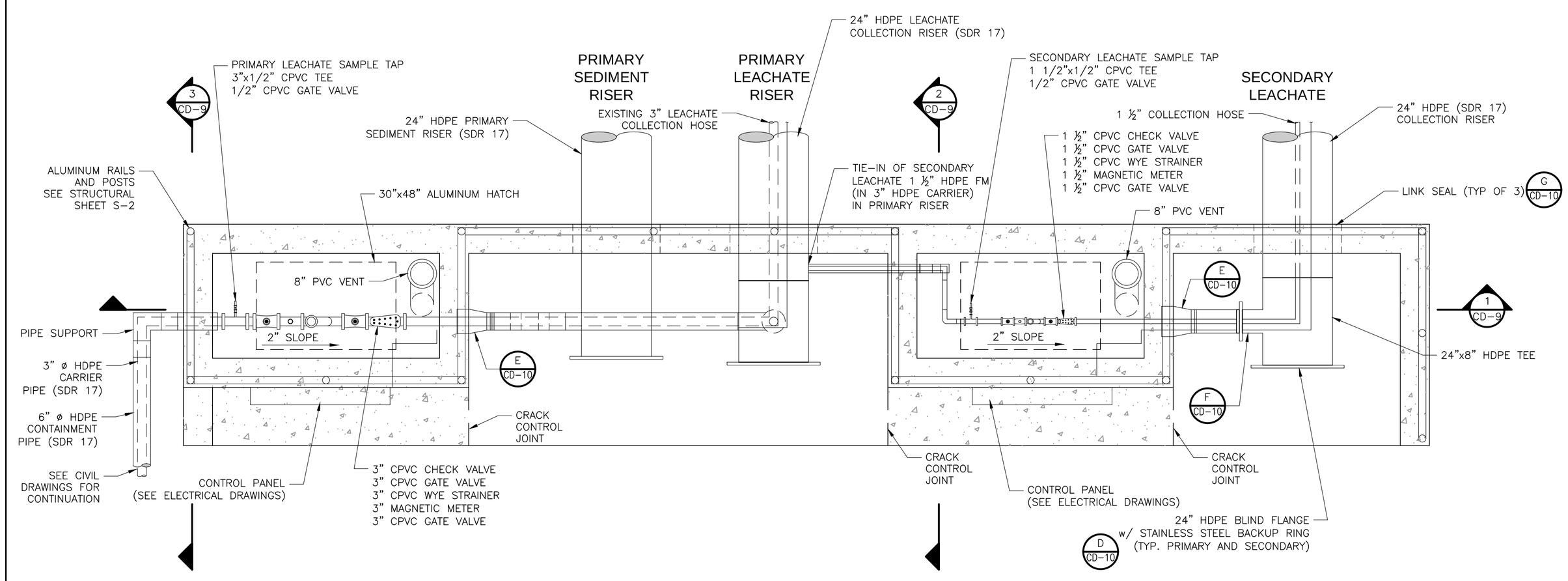

NOTES:
1. THE 24-INCH RISER PIPES FROM THE PRIMARY AND SECONDARY PIPES SHALL BE FIELD ADJUSTED TO MEET FIELD CONDITIONS.
2. PRIOR TO THE COMPLETION OF FORMWORK AND PLACEMENT OF CONCRETE, THE ENGINEER SHALL INSPECT AND APPROVE THE CONFIGURATION OF THE VAULT BOX.
3. CONTRACTOR SHALL TEST FORCEMAINS IN ACCORDANCE TO THE SPECIFICATIONS.
4. CONTRACTOR SHALL PROVIDE ALL NECESSARY SIGNAGE AS NEEDED FOR THE PUMP STATION AND AS SPECIFIED IN THE SPECIFICATIONS.
5. VAULT BOX DETAIL FOR PHASES 10, 11, 13 & 14 ARE A MIRROR IMAGE FROM WHAT IS SHOWN ON DETAIL A.
6. FOR STRUCTURAL DIMENSIONS OF VAULT BOX, SEE STRUCTURAL SHEET S-2.

PLAN VIEW
PHASES 6, 7, 8, 9 & 12 VAULT BOX DETAIL (A / CD-5)
1/2" = 1'-0"

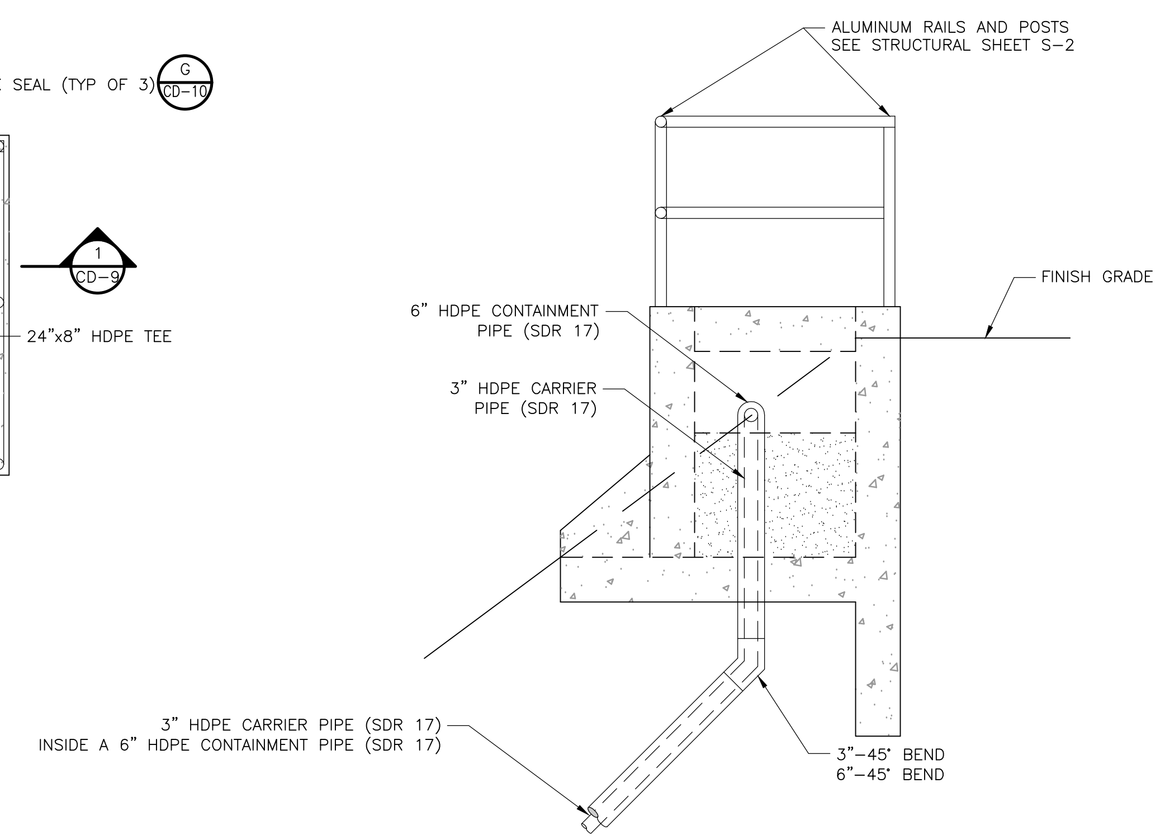

SECTION (3 / -)
1/2" = 1'-0"

JOHN G. LADNER
P.E. NO. 037969

REV. NO.	DATE	DRWN	CHKD	REMARKS

DESIGNED BY: R. KADAMBALA
DRAWN BY: B. CHAPMAN
SHEET CHK'D BY: J. HOFFMAN
CROSS CHK'D BY: A. MULLA SALEH
APPROVED BY: J. LADNER
DATE: AUG. 2013

CDM Smith
8381 Dix Ellis Trail, Suite 400
Jacksonville, Fl 32256
Tel: (904) 731-7109

CITY OF JACKSONVILLE

TRAIL RIDGE LANDFILL PHASES 6-14
CLASS 1 CELL EXPANSION

CIVIL DETAILS - LEACHATE SYSTEM

PROJECT NO. 9012-80695
FILE NAME: CD09SDDT
SHEET NO. CD-9

FOR PERMIT - NOT FOR CONSTRUCTION

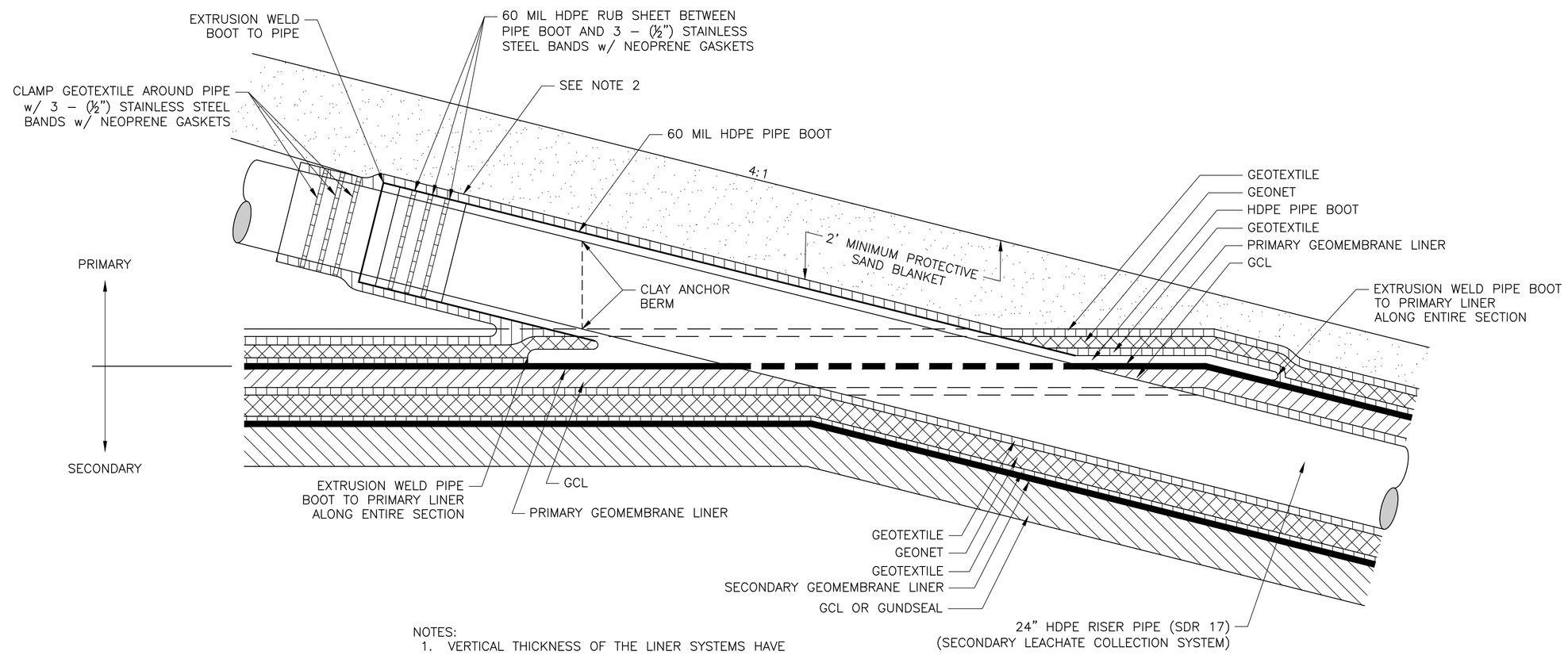

NOTES:
1. VERTICAL THICKNESS OF THE LINER SYSTEMS HAVE BEEN EXAGGERATED FOR CLARITY PURPOSES ONLY.
2. PIPE BOOT SHALL BE PLACED ±30' FROM THE 24" HDPE (SDR 17) RISER 45° FITTING AND JUST ABOVE THE PRIMARY LINER PENETRATION POINT

SECONDARY LEACHATE COLLECTION RISER PIPE – LINER PENETRATION

DETAIL A – NTS

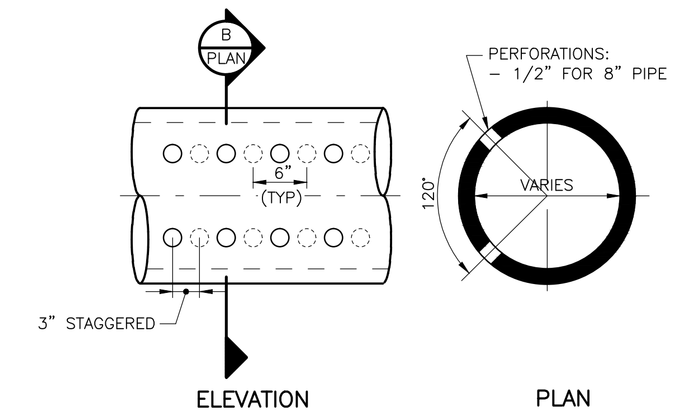

NOTES:
1. 8" PIPE FOR LEACHATE COLLECTION LATERAL
2. ALL PERFORATED LEACHATE COLLECTION PIPES SHALL BE SDR–15.5

HDPE PERFORATED PIPE

DETAIL B – 1" = 1'–0"

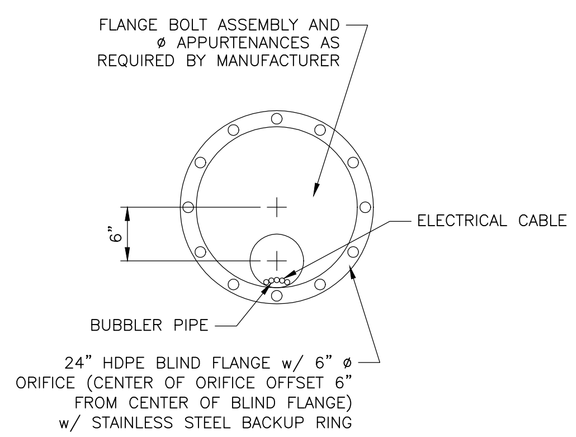

24" FLANGE FOR LEACHATE COLLECTION RISER

D – N.T.S.

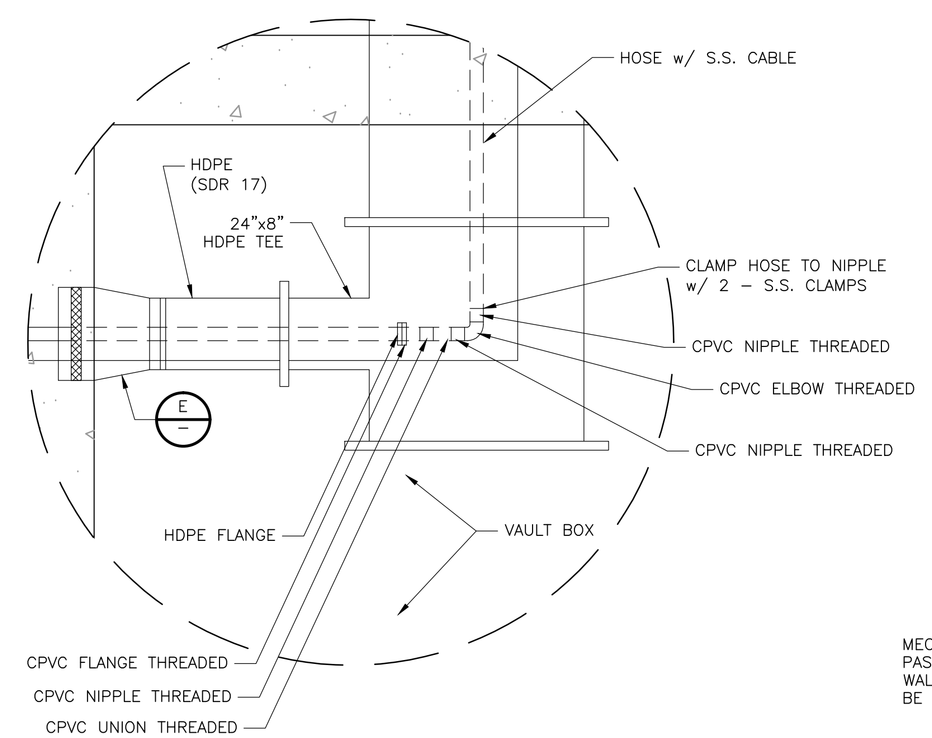

NOTES:
1. ALL CPVC PIPE SHALL BE SCHEDULE 80.
2. SECONDARY LEACHATE PIPING SHALL CONSIST OF A HOSE SIZE OF 1 ½" PUMP EFFLUENT SIZE AND TRANSITION TO CPVC PIPING INSIDE SECONDARY VAULT.
3. PRIMARY LEACHATE PIPING SHALL CONSIST OF 3" HOSE SIZE AND TRANSITION TO 3" CPVC PIPING INSIDE THE PRIMARY VAULT.

PRIMARY PIPING DETAIL

F – N.T.S.

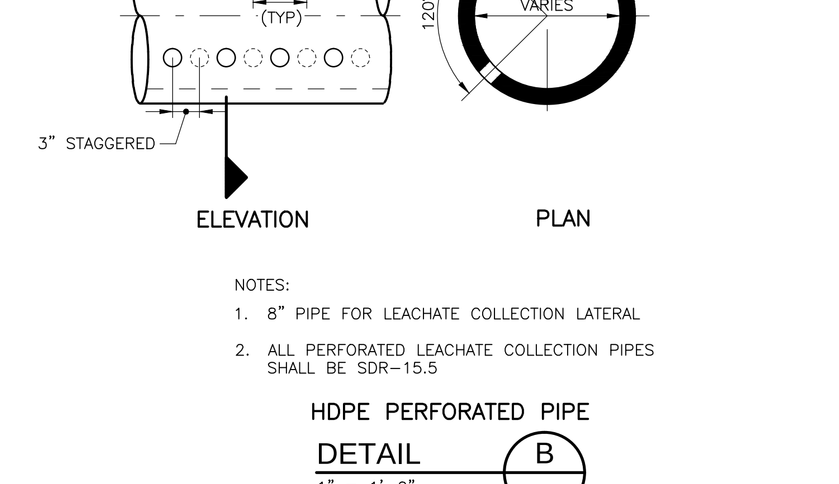

NOTE:
INSULATED PIPING: INTERRUPT INSULATION AT BOTH SIDES OF WALL. INSTALL INSULATION FLUSH WITH WALL AFTER WATER TIGHT INSTALLATION OF MECHANICAL SEAL.

WALL SLEEVE WITH MECHANICAL SEAL FOR CONCRETE, BRICK, CMU OR CAVITY WALLS

DETAIL G – N.T.S.

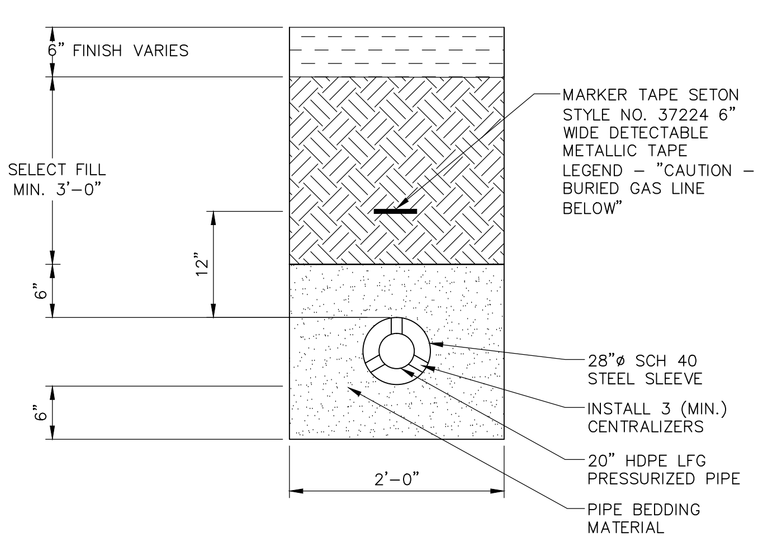

ROAD CROSSING

DETAIL C – N.T.S.

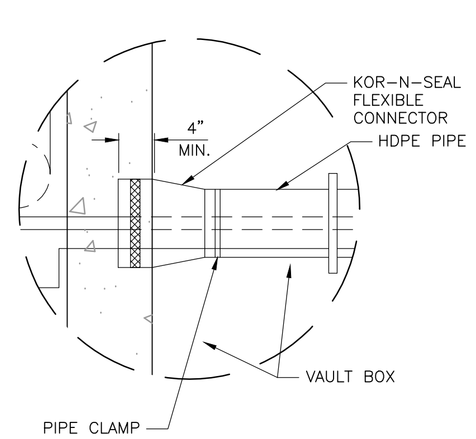

KOR-N-SEAL DETAIL

E – N.T.S.

JOHN G. LADNER
P.E. NO. 037969

REV. NO.	DATE	DRWN	CHKD	REMARKS

DESIGNED BY: R. KADAMBALA
DRAWN BY: B. CHAPMAN
SHEET CHK'D BY: J. HOFFMAN
CROSS CHK'D BY: A. MULLA SALEH
APPROVED BY: J. LADNER
DATE: AUG. 2013

CDM Smith
8381 Dix Ellis Trail., Suite 400
Jacksonville, Fl 32256
Tel: (904) 731-7109

CITY OF JACKSONVILLE

TRAIL RIDGE LANDFILL PHASES 6-14
CLASS 1 CELL EXPANSION

CIVIL DETAILS IV

PROJECT NO. 9012–80695
FILE NAME: CD10SDDT
SHEET NO.
CD-10

FOR PERMIT - NOT FOR CONSTRUCTION

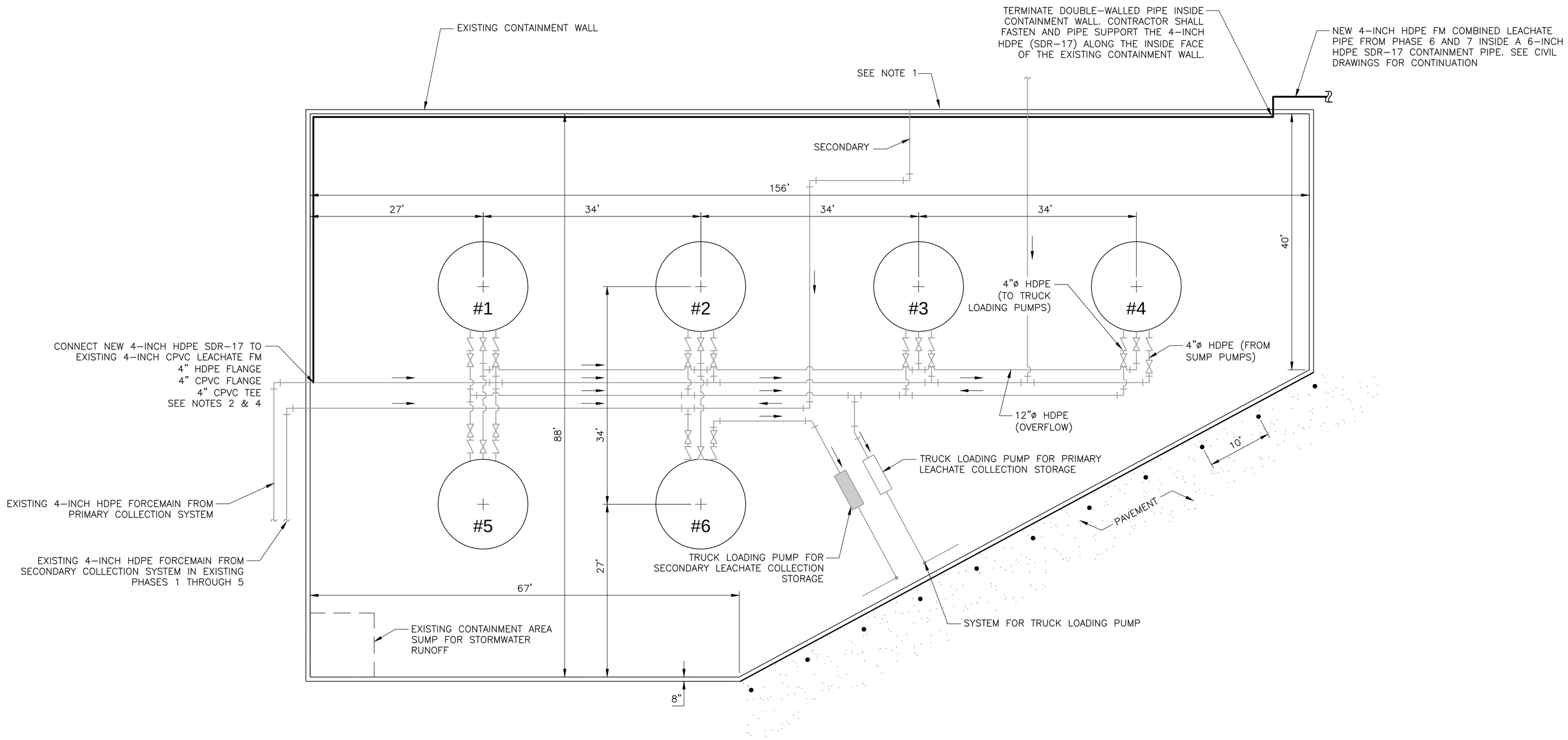

NEW LEACHATE FORCEMAIN TIE-IN AT EXISTING LEACHATE STORAGE CONTAINMENT AREA

DETAIL A
NTS –

NOTES:

1. ALL EXISTING PIPING NOT SHOWN ON THIS DIAGRAM. CONTRACTOR TO COORDINATE ROUTING OF NEW 4-INCH HDPE PIPE INSIDE CONTAINMENT AREA OF THE LEACHATE STORAGE SYSTEM ACCORDINGLY.
2. CONTRACTOR SHALL COORDINATE WITH LANDFILL OPERATOR FOR SCHEDULING NEW TIE-IN OF 4" HDPE LEACHATE PIPING TO EXISTING 4" CPVC PIPING INSIDE THE LEACHATE CONTAINMENT AREA.
3. THE NEW 4" FORCEMAIN CONTAINS BOTH PRIMARY AND SECONDARY LEACHATE TOGETHER.
4. THIS IS AN OPERATING LANDFILL AND LEACHATE COLLECTION OPERATION. CONTRACTOR SHALL SUBMIT A DETAILED CONSTRUCTION SEQUENCE FOR REVIEW BY ENGINEER AND SHALL MINIMIZE FLOW OUTAGE TO LESS THAN 2 HOURS.

JOHN G. LADNER
P.E. NO. 037969

REV. NO.	DATE	DRWN	CHKD	REMARKS

DESIGNED BY: R. KADAMBALA
DRAWN BY: B. CHAPMAN
SHEET CHK'D BY: J. HOFFMAN
CROSS CHK'D BY: A. MULLA SALEH
APPROVED BY: J. LADNER
DATE: AUG. 2013

CDM Smith
8381 Dix Ellis Trail., Suite 400
Jacksonville, Fl 32256
Tel: (904) 731-7109

CITY OF JACKSONVILLE

TRAIL RIDGE LANDFILL PHASES 6-14
CLASS 1 CELL EXPANSION

CIVIL DETAILS - LEACHATE STORAGE

PROJECT NO. 9012-80695
FILE NAME: CD11SDDT

SHEET NO.
CD-11

FOR PERMIT - NOT FOR CONSTRUCTION

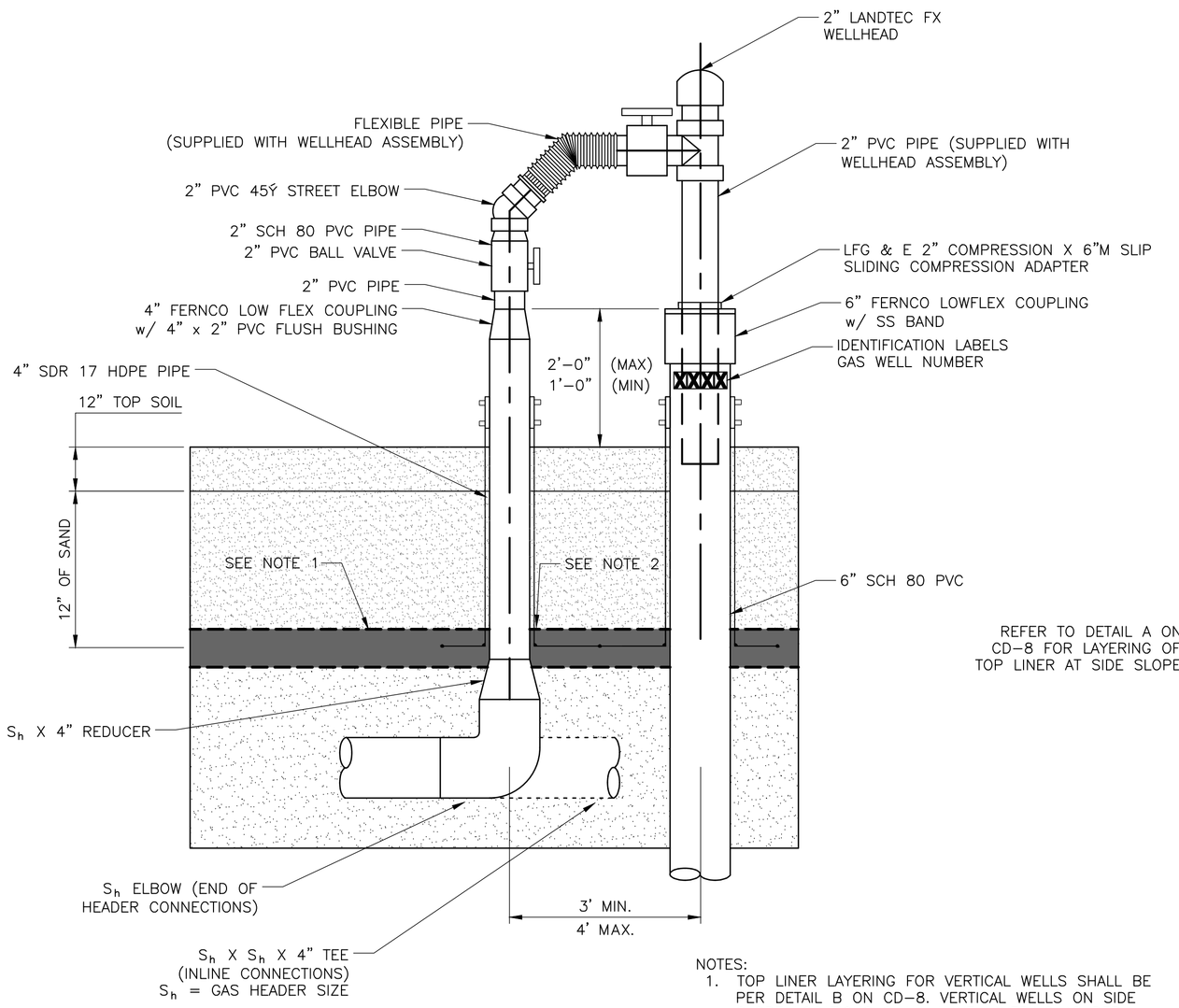

GAS COLLECTION WELLHEAD ASSEMBLY (TYP)

DETAIL A C-34

NTS

NOTES:

1. TOP LINER LAYERING FOR VERTICAL WELLS SHALL BE PER DETAIL B ON CD-8. VERTICAL WELLS ON SIDE SLOPE LOCATIONS SHALL HAVE LAYERING AS PER DETAIL A ON CD-8.
2. CONTRACTOR SHALL IMPLEMENT A BOOT AROUND WELL CASINGS FOR PENETRATION OF GEOMEMBRANE LAYER FOR TOP COVER PENETRATION.

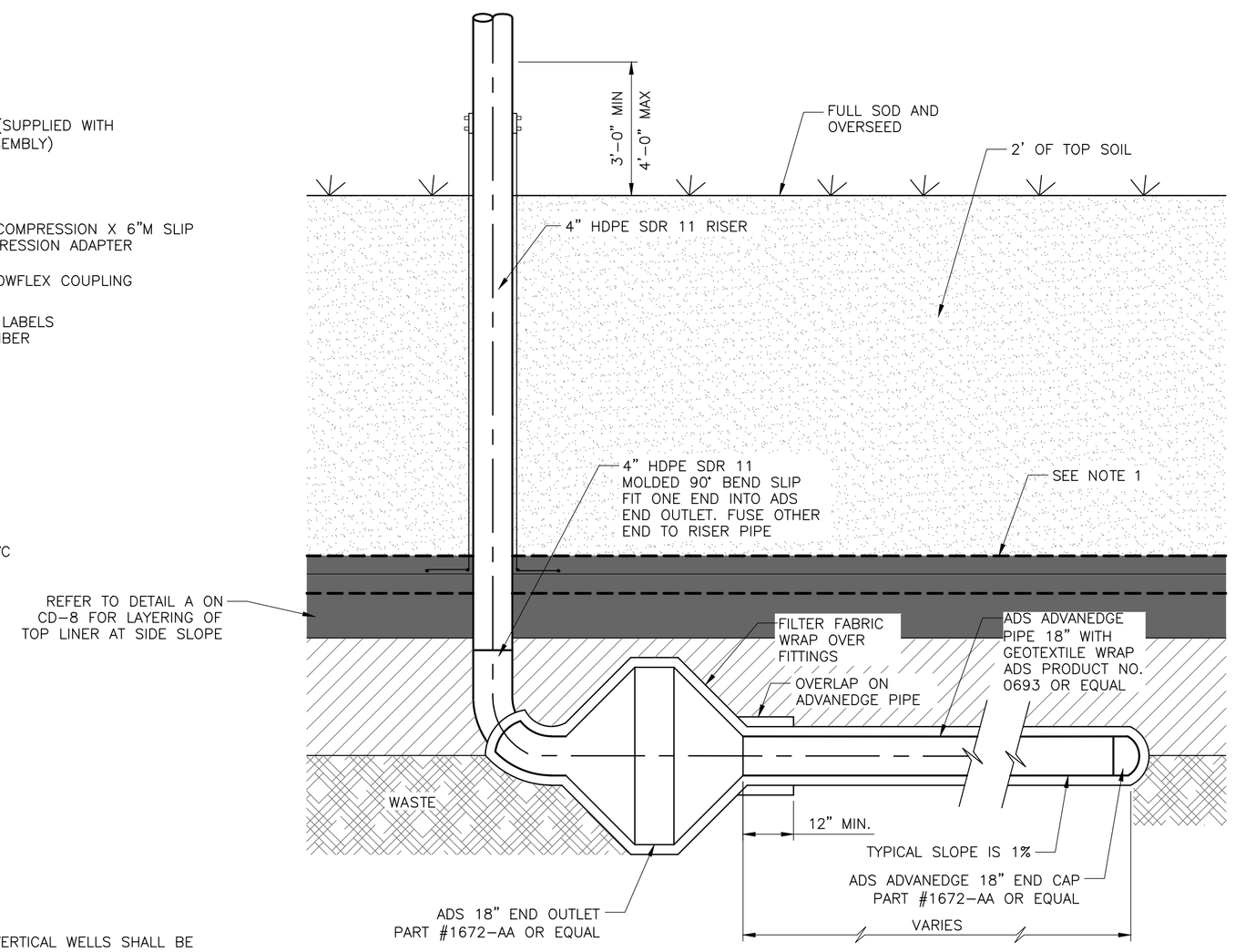

HORIZONTAL COLLECTOR AND RISER

DETAIL B C-34

NTS

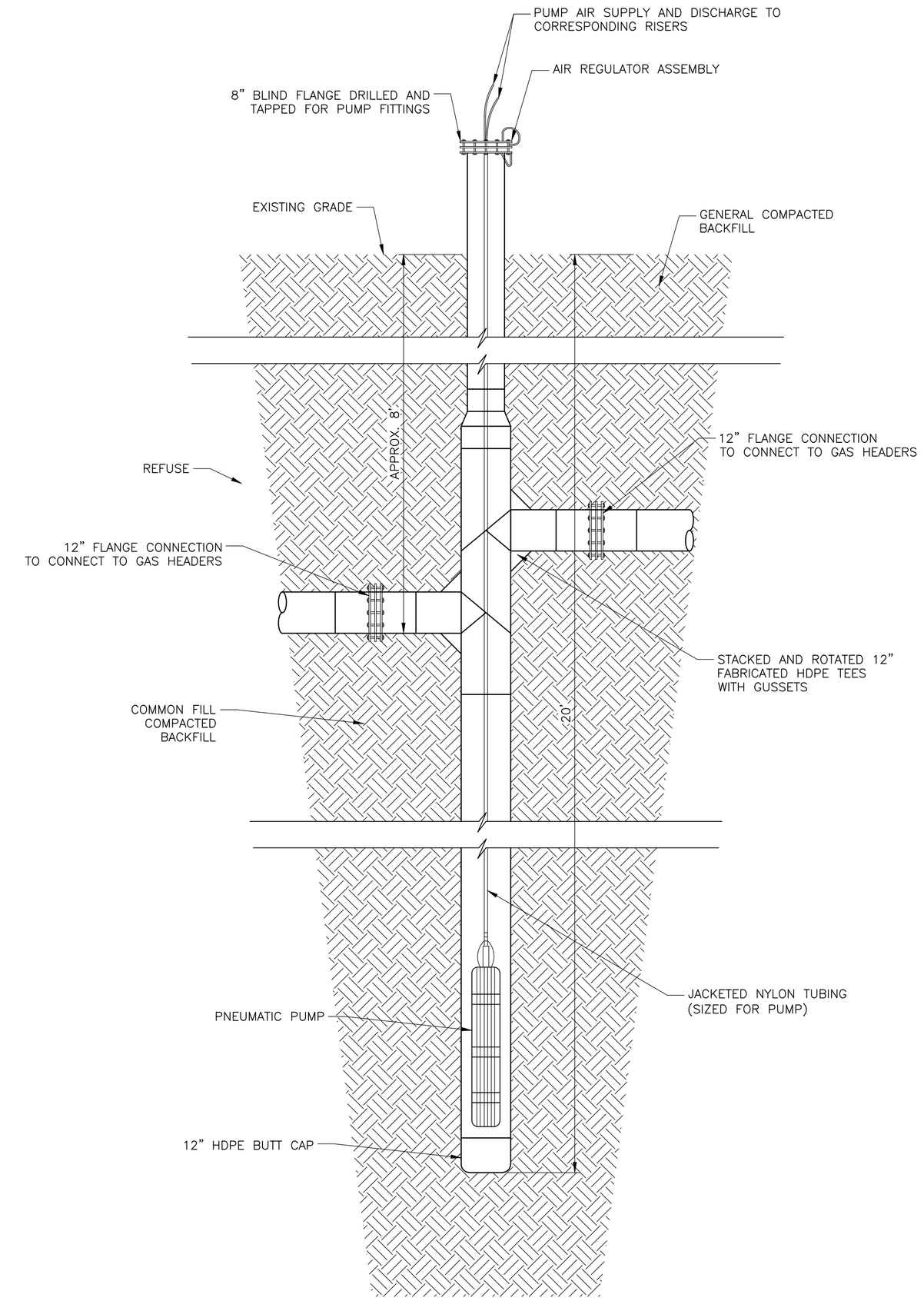

CONDENSATE SUMP WITH PNEUMATIC PUMP

DETAIL C C-34

NTS

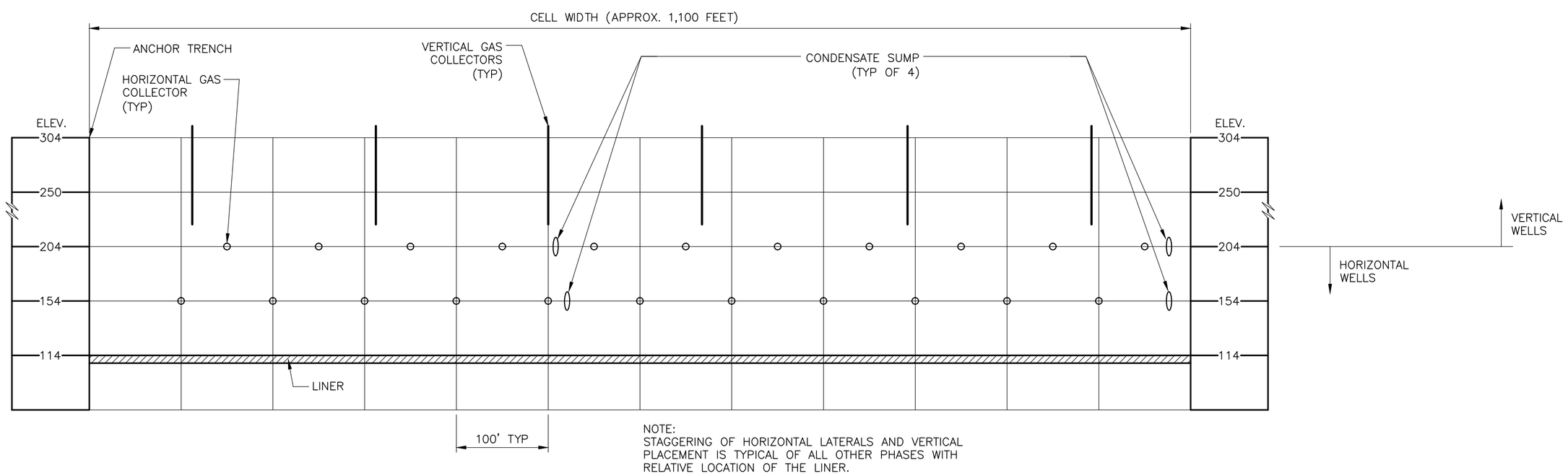

NOTE:
STAGGERING OF HORIZONTAL LATERALS AND VERTICAL PLACEMENT IS TYPICAL OF ALL OTHER PHASES WITH RELATIVE LOCATION OF THE LINER.

PHASE 6A HORIZONTAL AND VERTICAL GAS COLLECTORS SECTION LOOKING WEST

SECTION 1 C-20

NTS

JOHN G. LADNER
P.E. NO. 037969

REV. NO.	DATE	DRWN	CHKD	REMARKS

DESIGNED BY: R. KADAMBALA
DRAWN BY: B. CHAPMAN
SHEET CHK'D BY: J. HOFFMAN
CROSS CHK'D BY: A. MULLA SALEH
APPROVED BY: J. LADNER
DATE: AUG. 2013

CDM Smith
8381 Dix Ellis Trail., Suite 400
Jacksonville, Fl 32256
Tel: (904) 731-7109

CITY OF JACKSONVILLE

TRAIL RIDGE LANDFILL PHASES 6-14
CLASS 1 CELL EXPANSION

CIVIL DETAILS - GAS MANAGEMENT SYSTEM

PROJECT NO. 9012-80695
FILE NAME: CD12SDDT

SHEET NO.
CD-12

FOR PERMIT - NOT FOR CONSTRUCTION