DEP Application for Waste Tire Processing Facility Permit Renewal Permit no. WT 48-0287891-001

Applicant: Empire Tire of Edgewater, 205 Bedford Road, Altamonte Springs, FL 32714

Location : 550 Mision Road, Orlando FL 32808

Eng. Carlos A. Moreno Jusino, P.E.

Florida License No. 76540

October 6, 2013

CD INSIDE

RECEIVED
OCT 09 2013
DEP Central Dist.

RECEIVED
OCT 09 2013
DEP Central Dist.

DEP Application for Waste Tire Processing Facility Permit Renewal Permit no. WT 48-0287891-001

Applicant: Empire Tire of Edgewater, 205 Bedford Road, Altamonte Springs, FL 32714

Location : 550 Mision Road, Orlando FL 32808

Eng. Carlos A. Moreno Jusino, P.E.

Florida License No. 76540 10/8/2013

October 6, 2013

CARLOS A. MORENO
LICENSE
No. 76540
STATE OF
FLORIDA
PROFESSIONAL ENGINEER

Table of contents

	PAGE NO.
Waste Tire Processing Facility Application	3
Part III - Attachments A - Facility Design	18
For Site Map – See Figure 1	20
For Vicinity Map – See Figure 2	21
For Boundary and Topographic Survey	22
For Soils Borings and Monitoring Wells	23
For Zoning Maps	24
Part III - Attachments B - Facility Operation	27
Emergency Preparedness Manual	37
Part III - Attachments C – Complete Closing Plan	46
Part III – Attachments D – Proof of Financial Responsibility	48
Total	54

Reset Form | Print Form

Florida Department of Environmental Protection

Bob Martinez Center
2600 Blair Stone Road
Tallahassee, Florida 32399-2400

DEP Form # 62-701.900(23)
Form Title: Waste Tire Processing Facility Permit Application
Effective Date: January 6, 2010
Incorporated in Rule 62-711.530(6)

Waste Tire Processing Facility Permit Application

Permit No. WT 48-0287891-001

Renewal ■ Modification ☐ Existing unpermitted facility ☐ Proposed new facility ☐

Part I-General Information:

A. Applicant Information:

1. Applicant Name: Empire Tire of Edgewater
2. Applicant Street Address: 4888 W. Colonial Drive
3. City: Orlando County: Florida Zip: 32808
4. Applicant Mailing Address: Same
5. City: County: Zip:
6. Contact person: Vince Contestabile Phone: (407)947-7273 FEID No:
7. Have any enforcement actions been taken by the Department against the applicant relating to the operation of any solid waste management facility in this state? This includes any Complaint, Notice of Violation, or revocation of a permit or registration, as well as any Consent Order in which a violation of Department rules is admitted. It does not include a Warning Letter, Warning Notice, Notice of Noncompliance, or other similar document which does not constitute agency action.
   Yes ☐ **No** ☒ **If yes**, attach a history and description of the enforcement actions.

B. Facility Information:

1. Facility Name: Empire Tire of Edgewater
2. Facility Street Address (Main Entrance): 550 Mission Road
3. City: Orlando County: Orange Zip: 32808
4. Facility Mailing Address: 4888 W. Colonial Drive
5. City: Orlando State: Florida Zip: 32808
6. Contact Person: Clifton McFadden Phone: (321)303-2096
7. Facility Location Coordinates:

   Section: 30 Township: 22 South Range: 29 East

   Latitude: 28.550145 Longitude: -81.442559
8. Anticipated date for starting construction Completed and for completion of construction Completed
9. Anticipated date for receipt of tires Currently(Renewal) and for start of processing Currently(Renewal

Mail completed form to appropriate district office listed below

Northwest District	Northeast District	Central District	Southwest District	South District	Southeast District
160 Government Center	7825 Baymeadows Way, Ste 200 B	3319 Maguire Blvd Ste 232	13051 N Telecom Pky	2295 Victoria Ave Ste 364	400 North Congress Ave
Pensacola, FL 32501-5794	Jacksonville, FL 32256-7590	Orlando, FL 32803-3767	Temple Terrace, FL	Fort Myers, FL 33902-2549	West Palm Beach, FL 33401
850-595-8360	904-807-3300	407-894-7555	813-632-7600	239-332-6975	561-681-6600

C. Land Owner Information (if different from applicant):

1. Owner's name: Same
2. Land owner's mailing address: _____
3. City: _____ State: _____ Zip: _____
4. Authorized Agent: _____ Agent's phone ( ) _____
5. Current lease expires: _____

D. Facility Operator Information (if different from applicant):

1. Operator's name: _____
2. Operator's mailing address: _____
3. City: _____ State: _____ Zip: _____
4. Contact person: _____ Phone: ( ) _____

E. Preparer of Application:

1. Name of person preparing application: Clifton Mcfadden
2. Mailing address: 4888 W. Colonial Drive
3. City: Orlando State: Fl Zip: 32808
4. Phone: (321)303-2096
5. Affiliation with facility: VP/MANAGER

Part II-Operations:

A. Facility type (check appropriate box):

■ Waste tire processing facility.

☐ Waste tire processing facility with on -site disposal of processed tires or processing residuals.

☐ Waste tire processing facility with on -site consumption of waste tires or processing residuals.

☐ Permitted solid waste management facility modification to allow wa ste tire site and processing.

B. Type of processing facility (check as many as apply):

■Shredder ☐Cutter ☐Chopper ☐Incinerator only ☐Incinerator with energy recovery
☐Pyrolysis ☐Supplemental fuel user ☐Other, explain _____

C. Storage: Indicate the maximum quantities of whole waste tires, processed waste tires, and processing residuals, expressed in tons, to be stored at the facility, in accordance with Rule 62-711.530(2), F.A.C.

	Outdoor Storage(tons)	Outdoor Storage (sq.ft)	Indoor Storage (tons)	Indoor Storage (sq.ft)	**Total Storage (tons)**
Whole waste tires:	200	14,300	0	0	200
Processed tires:	500	20,000	0	0	500
Processing residuals:	125	5,000	0	0	125
TOTALS:	825	39,300	0	0	825

D. For reporting quantity of tires in tons, tires will be: weighed on site ■ weighed off site ☐ weights will be calculated ☐

E. Facilities that will not be disposing of processed tires or processing residual on the facility site must indicate the permitted solid waste management facility where processed tires or residuals will be disposed.

1. Name of facility OMNI WASTE OF OSCEOLA COUNTY/WSI
2. Street address: 1501 OMNI WAY
3. City: ST CLOUD County: FL Zip: 34773

F. Facilities that will be delivering processed tires to consuming facilities must describe the existing or proposed markets for those processed tires.
Rubber Feed Stock, Rubber Mulch, Tire Derived Fuel

Part III-Attachments:

A. Facility design

NOTE: All maps, plan sheets, drawings, isometrics, cross sections, or aerial photographs shall be legible; be signed and sealed by a registered professional engineer responsible for their preparation; be of appropriate scale to show clearly all required details; be numbered, referenced to narrative, titled, have a legend of symbols used, contain horizontal and vertical scales (where applicable), and specify drafting or origination dates; and use uniform scales as much as possible, contain a north arrow and use NGVD for all elevations.

1. A topographic or section map of the facility, including the surrounding area for one mile, no more than one year old, showing land use and zoning within one mile of the facility
2. A plot plan of the facility on a scale of not less than one inch equals 200 feet. At a minimum, the plot plan shall include
   a. The facility design, including the location and size of all storage and processing areas for used tires, unprocessed waste tires,processed waste tires, and waste tire processing residuals;
   b. All wetlands and water bodies within the facility or within 200 feet of any storage area;
   c. Stormwater control measures, including ditches, dikes, and other structures;
   d. Boundaries of the facility, legal boundaries of the land containing the facility, and any easements or rights of way that are within the facility or within 200 feet of any storage area;
   e. Location, size, and depth of all wells within the facility or within 200 feet of any storage area;
   f. All structures and buildings that are, or will be, constructed at the facility; include those used in storage and processing operations;
   g. All areas used for loading and unloading;
   h. All access roads and internal roads, including fire lanes;
   i. Location of all fences, gates, and other access control measures; and
   j. Location of all disposal areas within the facility.

B. Facility operation.

1. A description of the facility's operation, process and products including how waste tires will be received and stored.
2. A description of the equipment used for processing tires. This description shall include the make, model, and hourly capacity of each piece of equipment.
3. Description of the waste from the process, the amount of waste expected and how and where this waste will be disposed of.
4. Statement of the maximum daily throughput and the planned daily and annual throughput.
5. A description of how the operator will maintain compliance with each of the storage requirements of Rule 62-711.540, F.A.C.
6. A copy of the emergency preparedness manual for the facility with a statement of the on site and off site locations where that manual will be maintained.
7. A copy of the fire safety survey
8. A description of how 75% of the annual accumulation of waste tires will be removed for disposal or recycling.

C. Completed closing plan for the facility as required by Rule 62-711.700(2) and (3), F.A.C.

D. Attach proof of financial responsibility as requirement by Rule 62 -711.500(3) OR a calculation showing that financial assurance documents, currently on file with the Department, are sufficient to assure closing of the waste tire site as well as any other solid waste management facility at that location.

E. A letter from the land owner (if different from applicant) authorizing use of the land as a waste tire pr ocessing facility.

F. If waste tires will be consumed or diposed of at the facility, attach a description of the other environmental permits that the applicant has for this use, including, permit number, date of issue, and name of issuing agency

G. The permit fee as required in Rule 62-4, F.A.C.

Part IV-Certification:

A. Applicant:

The undersigned applicant or authorized representative of Empire Tire of Edgewater Is aware that statements made in this form and attached information are an application for a Tire Processing Facility Permit from the Florida Department of Environmental Protection and certifies that The information in this application is true, correct and complete to the best of his knowledge and belief. Further, the undersigned agrees to comply with the provisions of Chap ter 403, Florida Statutes, and all rules and regulations of the Department. It is understood that the Department will be notified prior to the sale or legal transfer of the facility.

Signature of Applicant or Authorized Agent	Vincent Contestabile Name and Title	09/19/2013 Date

B. Professional Engineer registered in Florida.

This is to certify that the engineering features of this waste tire processing facility have been Designed/examined by me and found to conform to engineering principals applicable to such facilit ies. In my professional judgment, this facility, when properly maintained and operated will comply with all applicable statues of the State of Florida and rules of the Department. It is agreed that the undersigned will provide the applicant with a set of instructions for proper maintenance and operation of the facility.

Signature	2312 Academy Cir W Mailing Address
Carlos A. Moreno Jusino Name and Title	Kissimmee FL 34744 City, State, Zip
76540 Florida Registration Number	321-295-9480 Telephone number

(please affix seal)

CARLOS A. MORENO
LICENSE
No. 76540
STATE OF
FLORIDA
PROFESSIONAL ENGINEER

10/8/2013
Date

Florida Department of Environmental Protection

Central District
3319 Maguire Boulevard, Suite 232
Orlando, Florida 32803-3767

Charlie Crist
Governor

Jeff Kottkamp
Lt. Governor

Michael W. Sole
Secretary

NOTICE OF PERMIT

In the matter of an
Application for Permit
By:
Mr. Vincent Contestabile
Empire Tire of Edgewater, LLC
4888 West Colonial Drive
Orlando, FL 32808

OCD-SW-08-0582

Orange County – SW
Empire Tire
Waste Tire Processing Facility
DEP File No. WT48-0287891-001

Dear Mr. Contestabile:

Enclosed is Permit Number WT48-0287891-001 to construct and operate the Empire Tire – Waste Tire Processing Facility, issued under Section(s) 403.061(14) and 403.707, of the Florida Statutes.

Any party to this order (permit) has the right to seek judicial review of the permit under section 120.68 of the Florida Statutes, by the filing of a Notice of Appeal under rule 9.110 of the Florida Rules of Appellate Procedure, with the Clerk of the Department of Environmental Protection, Office of General Counsel, Mail Station 35, 3900 Commonwealth Boulevard, Tallahassee, Florida 32399-3000 and by filing a copy of the notice of appeal accompanied by the applicable filing fees with the appropriate district court of appeal. The notice of appeal must be filed within thirty days after this notice is filed with the Clerk of the Department.

Executed in Orlando, Florida.

STATE OF FLORIDA DEPARTMENT
OF ENVIRONMENTAL PROTECTION

F. Thomas Lubozynski for

Vivian F. Garfein
Director, Central District
3319 Maguire Boulevard, Suite 232
Orlando, FL 32803
407/894-7555

Date: November 13, 2008

FILING AND ACKNOWLEDGMENT

FILED, on this date, pursuant to Section 120.52, F. S., with the designated Department Clerk, receipt of which is hereby acknowledged.

E. Williams — Nov. 13, 2008

Clerk — **Date**

CERTIFICATE OF SERVICE

The undersigned duly designated deputy agency clerk hereby certifies that this NOTICE OF PERMIT and all copies were sent before the close of business on November 13, 2008 to the listed persons.

E. Williams

Clerk

VFG/gc/ew

Enclosures
1. Permit No. WT48-0287891-001
2. Appendix A – List of Documents Incorporated into Permit
3. Appendix B – Time Sensitive Specific Conditions

Copies furnished to:
Richard Tedder, P.E. – DEP – Tallahassee
Fred Wick – DEP – Tallahassee
Frank Hornbrook – DEP – Tallahassee
Luke Miorelli, P.E. – M. E. Construction, Inc. luke@meconstruction.com
Jim Becker – Orange County Utilities Solid Waste Division jim.becker@ocfl.net
Dan Morrical, P.E. – Orange County Utilities Solid Waste Division dan.morrical@ocfl.net
Lori Cunniff – Orange County EPD lori.cunniff@ocfl.net

Florida Department of Environmental Protection

Central District
3319 Maguire Boulevard, Suite 232
Orlando, Florida 32803-3767

Charlie Crist
Governor

Jeff Kottkamp
Lt. Governor

Michael W. Sole
Secretary

Permittee:
Empire Tire of Edgewater, LLC
4888 West Colonial Drive
Orlando, FL 32808

Attention: Mr. Vincent Contestabile

WACS Facility: 95062
Permit/Certification Number: WT48-0287891-001
Expiration Date:10/17/2013
County: Orange
Section 30, Township 22 South, Range 29 East
Latitude 28°33'52" North, Longitude 80°26'33"
Project: Empire Tire - Waste Tire Processing Facility

This permit is issued under the provisions of Chapter(s) 403, Florida Statutes, and Florida Administrative Code Rule(s) 62-4, 62-701 and 62-711. The above named permittee is hereby authorized to perform the work or operate the facility shown on the application and approved drawing(s), plans, and other documents attached hereto or on file with the Department and made a part hereof and specifically described as follows:

- To construct and operate a waste tire processing facility.
- Empire Tire will provide services including collection, culling and shredding of scrap tires. Various products will be made from the processing of these tires including rubber mulch, tire derived aggregate and tire derived fuel. Any residual material will be loaded onto walking floor trailers or roll-off containers and shipped to a DEP permitted disposal facility.

LOCATION: This facility is located at 550 Mission Road, Orlando, in Section 30, Township 22 South, Range 29 East, in Orange County, Florida.

"More Protection, Less Process"
www.dep.state.fl.us

GENERAL CONDITIONS

1. The terms, conditions, requirements, limitations and restrictions set forth in this permit, are "permit conditions" and are binding and enforceable pursuant to Sections 403.141, 403.727, or 403.859 through 403.861, Florida Statutes (F.S.) The permittee is placed on notice that the Department will review this permit periodically and may initiate enforcement action for any violation of these conditions.

2. This permit is valid only for the specific processes and operations applied for and indicated in the approved drawings or exhibits. Any unauthorized deviation from the approved drawings, exhibits, specifications, or conditions of this permit may constitute grounds for revocation and enforcement action by the Department.

3. As provided in subsections 403.087(6) and 403.722(5), F.S., the issuance of this permit does not convey any vested rights or any exclusive privileges. Neither does it authorize any injury to public or private property or any invasion of personal rights, nor any infringement of federal, state, or local laws or regulations. This permit is not a waiver of or approval of any other Department permit that may be required for other aspects of the total project which are not addressed in this permit.

4. This permit conveys no title to land or water, does not constitute State recognition or acknowledgment of title, and does not constitute authority for the use of submerged lands unless herein provided and the necessary title or leasehold interests have been obtained from the State. Only the Trustees of the Internal Improvement Trust Fund may express State opinion as to title.

5. This permit does not relieve the permittee from liability for harm or injury to human health or welfare, animal, or plant life, or property caused by the construction or operation of this permitted source, or from penalties therefore; nor does it allow the permittee to cause pollution in contravention of Florida Statutes and Department rules, unless specifically authorized by an order from the Department.

6. The permittee shall properly operate and maintain the facility and systems of treatment and control (and related appurtenances) that are installed and used by the permittee to achieve compliance with the conditions of this permit, as required by Department rules. This provision includes the operation of backup and auxiliary facilities or similar systems when necessary to achieve compliance with the conditions of the permit and when required by Department rules.

7. The permittee, by accepting this permit, specifically agrees to allow authorized Department personnel, upon presentation of credentials or other documents as may be required by law and at reasonable times, access to the premises where the permitted activity is located or conducted to:

   (a) Have access to and copy any records that must be kept under conditions of this permit;
   (b) Inspect the facility, equipment, practices, or operations regulated or required under this permit; and
   (c) Sample or monitor any substances or parameters at any location reasonably necessary to assure compliance with this permit or Department rules.

8. If, for any reason, the permittee does not comply with or will be unable to comply with any condition or limitation specified in this permit, the permittee shall immediately provide the Department with the following information:

   (a) A description of and cause of noncompliance; and
   (b) The period of noncompliance, including dates and times; or, if not corrected, the anticipated time the noncompliance is expected to continue, and steps being taken to reduce, eliminate, and prevent recurrence of the noncompliance.

   The permittee shall be responsible for any and all damages which may result and may be subject to enforcement action by the Department for penalties or for revocation of this permit.

"More Protection, Less Process"
www.dep.state.fl.us

9. In accepting this permit, the permittee understands and agrees that all records, notes, monitoring data and other information relating to the construction or operation of this permitted source which are submitted to the Department may be used by the Department as evidence in any enforcement case involving the permitted source arising under the Florida Statutes or Department rules, except where such use is prescribed by Section 403.111 and 403.73, F.S. Such evidence shall only be used to the extent it is consistent with the Florida Rules of Civil Procedure and appropriate evidentiary rules.

10. The permittee agrees to comply with changes in Department rules and Florida Statutes after a reasonable time for compliance; provided, however, the permittee does not waive any other rights granted by Florida Statutes or Department rules.

11. This permit is transferable only upon Department approval in accordance with Rule 62-4.120 and 62-730.300, Florida Administrative Code (F.A.C.), as applicable. The permittee shall be liable for any non-compliance of the permitted activity until the transfer is approved by the Department.

12. This permit or a copy thereof shall be kept at the work site of the permitted activity.

13. The permittee shall comply with the following:

    (a) Upon request, the permittee shall furnish all records and plans required under Department rules. During enforcement actions, the retention period for all records will be extended automatically unless otherwise stipulated by the Department.

    (b) The permittee shall hold at the facility or other location designated by this permit records of all monitoring information (including all calibration and maintenance records and all original strip chart recordings for continuous monitoring information) required by the permit, copies of all reports required by this permit, and records of all data used to complete the application for this permit. These materials shall be retained at least three years from the date of the sample, measurement, report, or application unless otherwise specified by Department rule.

    (c) Records of monitoring information shall include:
        1. the date, exact place, and time of sampling or measurements;
        2. the person responsible for performing the sampling or measurements;
        3. the dates analyses were performed;
        4. the person responsible for performing the analyses;
        5. the analytical techniques or methods used;
        6. the results of such analyses.

14. When requested by the Department, the permittee shall within a reasonable time furnish any information required by law which is needed to determine compliance with the permit. If the permittee becomes aware the relevant facts were not submitted or were incorrect in the permit application or in any report to the Department, such facts or information shall be corrected promptly.

"More Protection, Less Process"
www.dep.state.fl.us

SPECIFIC CONDITIONS:

Note that time sensitive specific conditions are summarized in Appendix B of this permit.

1. Plans and Specifications: Drawings, plans, documents and specifications submitted by the permittee, not attached hereto, but on file at the Central District office, are made a part of this permit. The documents are listed in Appendix A.

2. Document Requirements: A copy of the permit, with a complete copy of the permit application and engineering drawings shall be kept on file at the facility for inspection and review upon request.

3. Other Permits: This permit does not relieve the permittee from complying with any other appropriate stormwater, ERP or other permit requirements.

4. Signs: Signs shall be posted at the entrance to the site stating operating hours, cost of disposal and site rules, Rule 62-711.540(1)(a), F.A.C.

5. Site Access: Access to the site shall be restricted by an effective barrier designed to prevent unauthorized entry and dumping, Rule 62-711.540(3)(d), F.A.C.

6. Authorized Person On-Site: An operator or other authorized person shall be on-site at all times during business hours.

7. Operations Involving Use of Open Flames: No operations involving the use of open flames shall be conducted within 25 feet of a waste tire pile, Rule 62-711.540(1)(b), F.A.C.

8. Safety Devices: Safety devices shall be provided on equipment to shield and protect the operators from potential hazards during operation.

9. Equipment Breakdown: In the event of equipment malfunction, destruction, breakdown or other problems resulting in the permittee being temporarily unable to comply with any of the conditions of this permit, the permittee shall immediately notify the Department. The notification shall address the cause of the problem, corrective action, and what steps are being taken to prevent a recurrence as required by Rule 62-4.130, F.A.C.

10. Stormwater Control Methods: Stormwater control methods shall meet stormwater requirements of Chapter 62-25 and 62-330, F.A.C. The facility shall be managed in such a way as to divert stormwater or floodwater around and away from the storage piles, Rule 62-711.540(3)(a), F.A.C.

11. Emergency Situations: The operator of the site shall immediately notify the Department in the event of a fire or other emergency if that emergency has potential off-site effects. Within two weeks of any emergency involving potential off-site impact, the operator of the site shall submit to the Department, a written report on the emergency. This report shall describe the origins of the emergency, the actions that were taken to deal with the emergency, the results of the actions that were taken, and an analysis of the success or failure of the actions, Rule 62-711.540(1)(f), F.A.C.

12. Certification Requirements: The facility shall meet the certification requirements of Rule 62-701.320(9)(a), F.A.C.

"More Protection, Less Process"
www.dep.state.fl.us

SPECIFIC CONDITIONS:

13. Minimum Size Requirements: Processed tires for recycling or disposal must meet the minimum size requirements specified in Rule 62-711.400(3), F.A.C.

14. Waste Tire Processing Facility Requirements: The facility shall meet the requirements of the waste tire processing facility, Rule 62-711.530, F.A.C.

15. Storage Requirements: Any storage of tires on-site shall meet with the fire department's standards along with the provisions cited in Rule 62-711.540, F.A.C., of the waste tire rule.

16. Control of Mosquitoes and Rodents: The owner or operator shall provide for control of mosquitoes and rodents so as to protect the public health and welfare, Rule 62-711.540(1)(j), F.A.C.

17. Tire Pile Dimensions: An outdoor tire pile or processed tire pile shall not exceed the following maximum dimensions: a width of 50 feet; an area of 10,000 square feet; and a height of 15 feet, Rule 62-711.540(3)(b), F.A.C.

18. Waste Tire Pile - Fire Lane: A 50-foot wide fire lane shall be placed around the perimeter of each waste tire pile, Rule 62-711.540(3)(c), F.A.C.

19. Processing Requirements: At least 75% of the whole tires, used tires, and processed tires that are delivered to or are contained on the site of the waste tire processing facility at the beginning of each calendar year must be processed and removed for disposal or recycling from the facility during the year, or disposed of in a permitted solid waste management facility, Rule 62-711.530(3). F.A.C.

20. Quarterly Reports: Owners or operators of waste tire processing facilities shall submit quarterly reports to the Department that summarize the information collected under Rule 62-711.530(4), F.A.C. The reports shall be submitted on DEP Form 62-701.900(21), on the 20th of the month following the close of each calendar quarter to the Department of Environmental Protection, Central District - Solid Waste Section, 3319 Maguire Boulevard, Suite 232, Orlando, Florida 32803, with a copy to the Department of Environmental Protection, Solid Waste Section, 2600 Blair Stone Road, Tallahassee, Florida 32399, Rule 62-711.530(5), F.A.C.

21. Permit Renewal: An application for permit renewal must be submitted at least 60 days prior to the expiration date of this permit. (Rule 62-4.090, F.A.C.).

22. Closure Plan: The waste tire processing facility shall comply with the closure plan requirements of Rule 62-711.700, F.A.C.

23. Disposal of Processed Tires or Residuals: The processed tires or residuals shall be disposed of at permitted disposal sites or properly recycled.

24. Maximum Storage: The maximum storage at the facility for whole waste tires, processed tires, and residuals, shall be 200 tons, 500tons and 125 tons, respectively, in accordance with Rule 62-711.530(2), F.A.C., and as stated on Page 2 of 4, DEP Form # 62-701.900(23) – Waste Tire Processing Facility Permit Application. The maximum storage at the facility includes a minimal amount of tires destined for re-sale.

"More Protection, Less Process"
www.dep.state.fl.us

PERMITTEE:
Empire Tire of Edgewater, LLC

WACS Facility: 95062
Permit/Certification Number: WT48-0287891-001
Expiration Date: 10/17/2013

Attention: Mr. Vincent Contestabile

SPECIFIC CONDITIONS:

25. Permit Deviations: The Department shall be notified and approval shall be obtained prior to executing any substantial changes or revisions to the construction and operation authorized by this permit.

26. Financial Responsibility: The permittee shall maintain compliance with Rule 62-711.500(3), F.A.C., by submitting all required updated supporting documentation in a timely manner as outlined in the Rule. There shall be no operation of this facility unless financial assurance acceptable to this Department is in place. All submittals in response to this specific condition, shall be submitted to: Financial Coordinator, Solid Waste Section, Department of Environmental Protection, 2600 Blair Stone Road, MS-4565, Tallahassee, Florida 32399-2400, with a copy to the Department of Environmental Protection, Central District - Solid Waste Section, 3319 Maguire Boulevard, Suite 232, Orlando, Florida 32803.

ISSUED: November 13, 2008

STATE OF FLORIDA DEPARTMENT
OF ENVIRONMENTAL PROTECTION

F. Thomas Lubozynski for

Vivian F. Garfein
Director, Central District

FILING AND ACKNOWLEDGMENT

FILED, on this date, pursuant to Section 120.52, Florida Statutes, with the designated Department Clerk, receipt of which is hereby acknowledged.

Nov. 13, 2008

Clerk Date

CERTIFICATE OF SERVICE

The undersigned duly designated deputy agency clerk hereby certifies that this NOTICE OF PERMIT and all copies were mailed before the close of business on November 13, 2008 to the listed persons.

Clerk

"More Protection, Less Process"
www.dep.state.fl.us

Appendix A

List of Documents Incorporated into the Permit

1. Empire Tire of Edgewater, LLC – DEP Application For Waste Tire Processing Facility, Orlando, Florida, Prepared By Luke Miorelli, P.E., West Melbourne, Florida dated April 11, 2008. Received and stamped April 15, 2008, DEP – Central District.

2. Project Drawings – Sheet 1 of 4 to 4 of 4 dated April 9, 2008. Received and stamped April 15, 2008, DEP – Central District.

3. Request for Additional Information from Central District – DEP dated May 5, 2008.

4. Response from M. E. Construction, Inc., Melbourne, Florida dated June 23, 2008. Received and stamped July 1, 2008, DEP – Central District.

5. Revised Project Plans from M. E. Construction, Inc., Melbourne, Florida dated June 20, 2008. Received and stamped July 1, 2008, DEP – Central District.

6. Response from M. E. Construction, Inc., Melbourne, Florida dated July 10, 2008. Received and stamped July 14, 2008, DEP – Central District.

7. Second Request for Additional Information from Central District – DEP dated July 18, 2008.

8. Response from M. E. Construction, Inc., Melbourne, Florida dated August 6, 2008. Received and stamped August 7, 2008, DEP – Central District.

9. Third Request for Additional Information from Central District – DEP dated August 28, 2008.

10. Financial Assurance approval letter from DEP – Tallahassee dated October 3, 2008.

Appendix B
Time Sensitive Specific Conditions
DEP Permit Number WT48-0287891-001

Specific Condition	Requirement	Action	Due date
9	Equipment Breakdown	Notify the Department of equipment breakdown, malfunction, etc.	Immediately upon discovery
11	Emergency Situations	Notify the Department in the event of a fire or other emergency if that emergency has potential off-site effects.	Immediately upon discovery
11	Emergency Situations	Submit a written report on the emergency involving fire or potential off-site impacts.	Within two weeks of the emergency.
17	Tire Pile Dimensions	Outdoor tire pile or processed tire pile shall not exceed the following maximum dimensions: 50 feet wide, area of 10,000 square feet, and a height of 15 feet.	Seek prior Department Approval for any deviations.
19	Processing Requirements	Process and remove for disposal at least 75% of the whole tires, and processed tires that are delivered to or contained on the site at the beginning of each year	By the end of the same year.
20	Quarterly Reports	Submit Quarterly Reports to the Department Central District Office summarizing information per Rule 62-711.530(3) F.A.C.	No Later Than 20th of month following the close of each Calendar Quarter
21	Operations Permit Renewal (Permit expires on 10/17/2013)	Submit an operation permit renewal application	At least 60 days prior to the expiration date of this permit (before 08/19/2013)
24	Maximum Storage	The maximum storage at the facility for whole waste tires, processed tires, and residuals shall be 200 tons, 500 tons, and 125 tons respectively. Additionally, minimal amount of tires destined for re-sale should be stored at site.	Seek prior Department Approval for any deviations.

Appendix B
Time Sensitive Specific Conditions
DEP Permit Number WT48-0287891-001

Specific Condition	Requirement	Action	Due date
25	Permit Deviations	Notify the Department of any substantial changes or revisions to the operation	Prior to executing any substantial changes or revisions to the operation
26	Financial Responsibility	Adjust annually the closure care cost estimates, and the financial assurance mechanism to reflect increase in cost estimates	Submit between January 1 and March 1 of each year; if using an escrow account submit between July 1 and September 1 of each year

Attachment
Part III – A
Facility Design

Facility Description

This Waste Tire Processing Facility consists of a 10.94 acres lot and it has:

1. One story concrete building to serve as an office for administration services.
2. An existing metal shed roof for the tire processing activities next to the shredded tire chip plant and truck loading and unloading areas.
3. A truck scale
4. Old tires storage area
5. Storage for 6", 2" tire chips and residuals.

For Site Map – See Figure 1 – page 20

For Vicinity Map – See Figure 2 – page 21

For Boundary and Topographic Survey – See page 22

For Soils Borings and Monitoring Wells – See page 23

For Zoning Maps – See pages 24 - 26

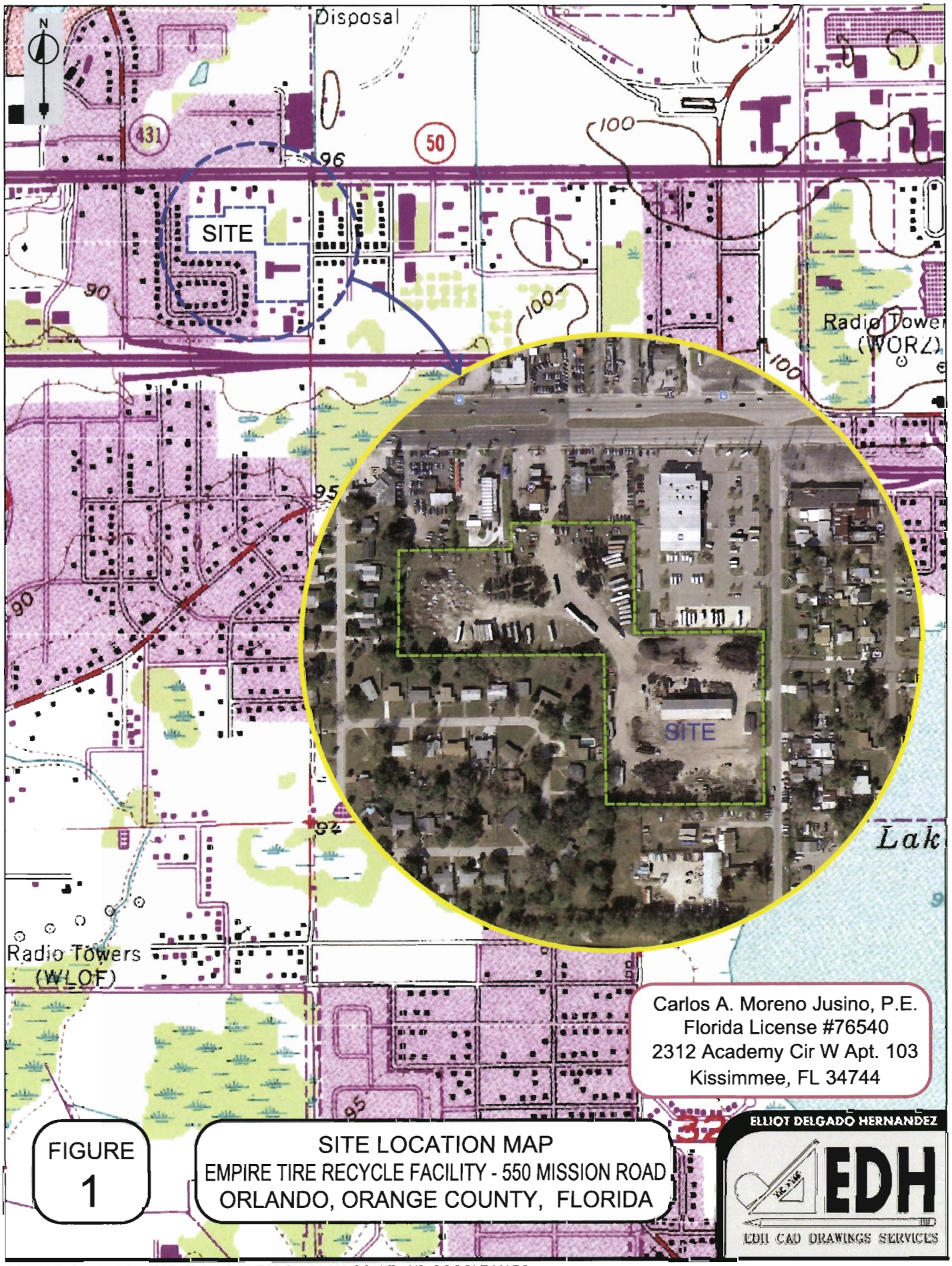

Carlos A. Moreno Jusino, P.E.
Florida License #76540
2312 Academy Cir W Apt. 103
Kissimmee, FL 34744

FIGURE
1

SITE LOCATION MAP
EMPIRE TIRE RECYCLE FACILITY - 550 MISSION ROAD
ORLANDO, ORANGE COUNTY, FLORIDA

ELLIOT DELGADO HERNANDEZ
EDH
EDH CAD DRAWINGS SERVICES

SOURCE: ORLANDO WEST, FLA. USGS TOPO 1:24,000 SCALE AND GOOGLE MAPS

FIGURE 2

VICINITY MAP
EMPIRE TIRE RECYCLE FACILITY - 550 MISSION ROAD
ORLANDO, ORANGE COUNTY, FLORIDA

SOURCE: GOOGLE MAP

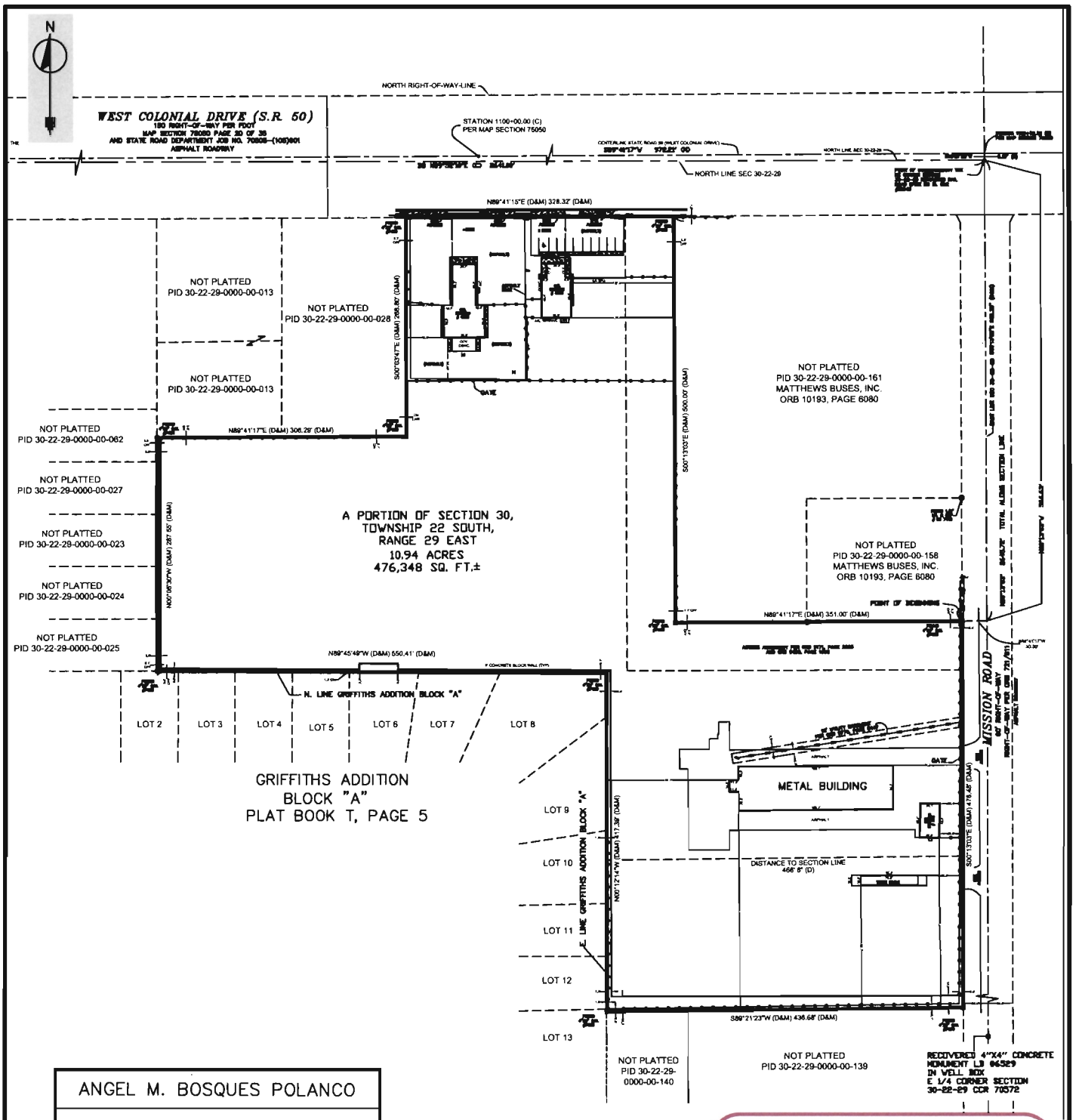

ANGEL M. BOSQUES POLANCO

P.S.M. LS 6581
PO.BOX. 421378, KISSIMMEE, FL. 34742
(407) 463-9019

Carlos A. Moreno Jusino, P.E.
Florida License #76540
2312 Academy Cir W Apt. 103
Kissimmee, FL 34744

FIGURE
3

BOUNDARY AND TOPOGRAPHIC SURVEY
EMPIRE TIRE RECYCLE FACILITY - 550 MISSION ROAD
ORLANDO, ORANGE COUNTY, FLORIDA

ELLIOT DELGADO HERNANDEZ
EDH
EDH CAD DRAWINGS SERVICES

SOURCE: ANGEL M. BOSQUES POLANCO P.S.M. LS 6581 SURVEY REV. FEB 2013 NOT TO SCALE ON THIS FIGURE

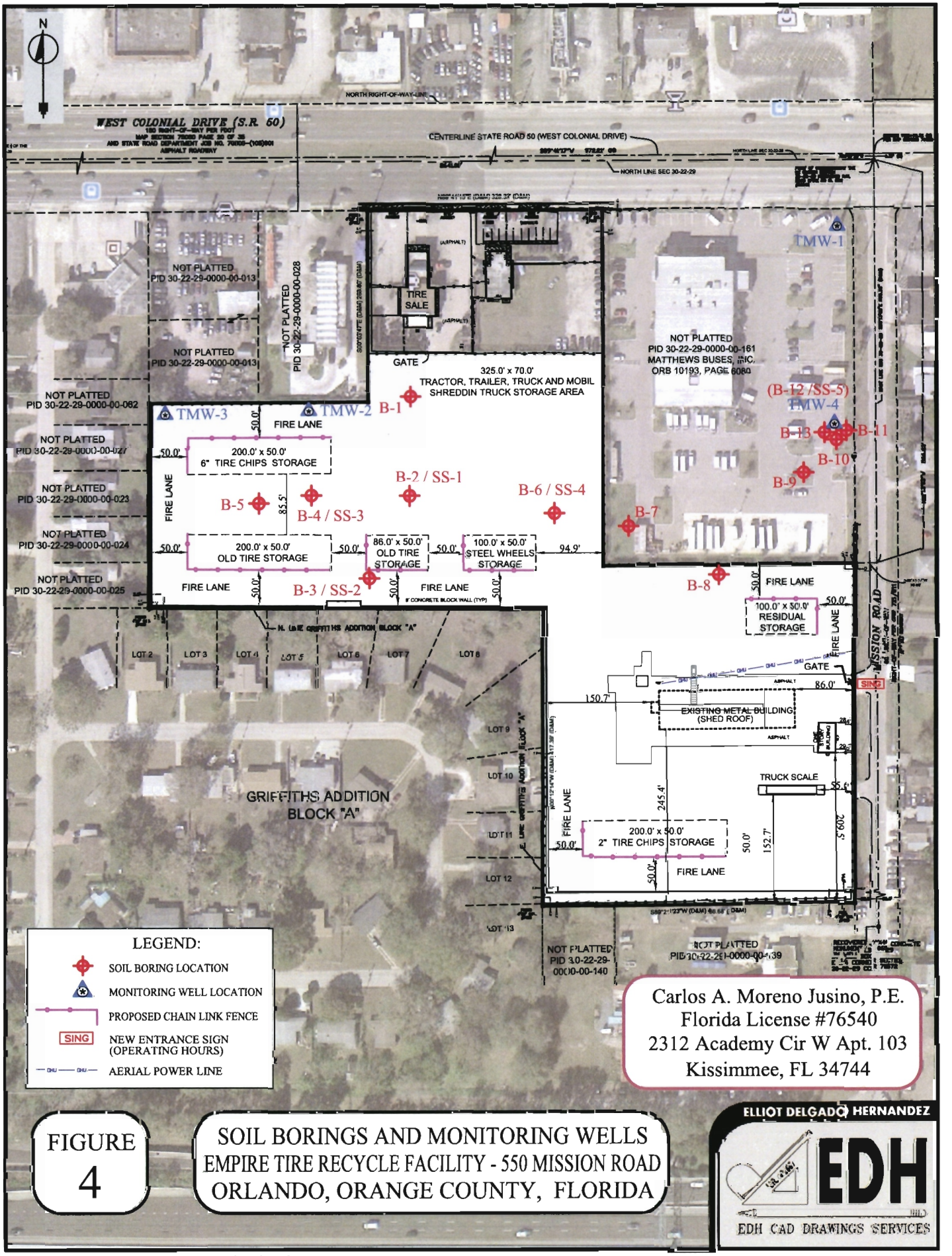

FIGURE 4

SOIL BORINGS AND MONITORING WELLS
EMPIRE TIRE RECYCLE FACILITY - 550 MISSION ROAD
ORLANDO, ORANGE COUNTY, FLORIDA

SOURCE: ORANGE COUNTY PUBLIC WORKS

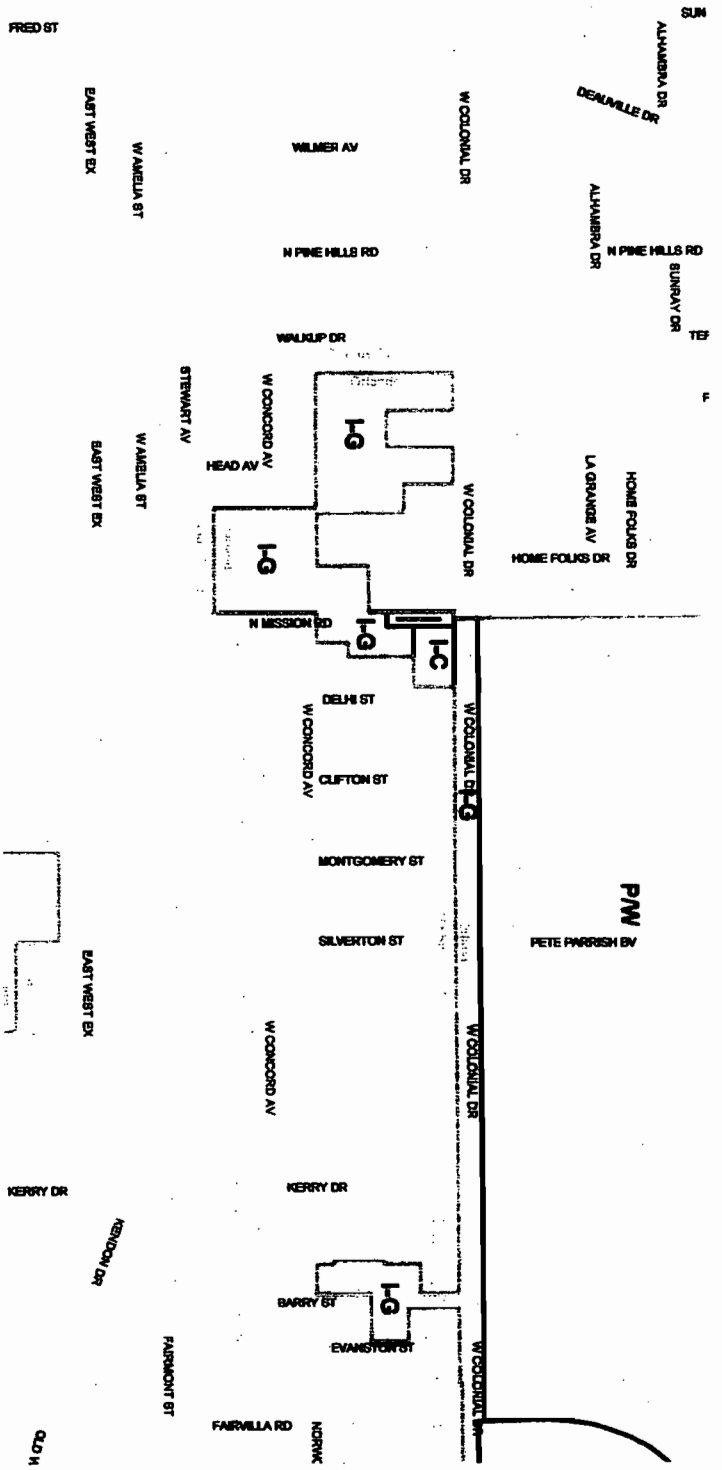
SUN
ALHAMBRA DR
DEAUVILLE DR
W COLONIAL DR
ALHAMBRA DR
N PINE HILLS RD
SUNRAY DR
TEF
F
LA GRANGE AV
HOME FOLKS DR
HOME FOLKS DR
W COLONIAL DR
LG
LG
LG
LG
LG
LG
N MISSION RD
DELHI ST
W CONCORD AV
CLIFTON ST
W COLONIAL DR
MONTGOMERY ST
SILVERTON ST
PETE PARRISH BV
P/W
W CONCORD AV
W COLONIAL DR
KERRY DR
KERRY DR
BARRY ST
EVANSTON ST
W COLONIAL DR
FAIRVILLA RD
NORWAK
FRED ST
EAST WEST EX
W AMELIA ST
WILMER AV
N PINE HILLS RD
WALKUP DR
STEWART AV
W CONCORD AV
HEAD AV
W AMELIA ST
EAST WEST EX
EAST WEST EX
KENDON DR
FAIRMONT ST
OLD H

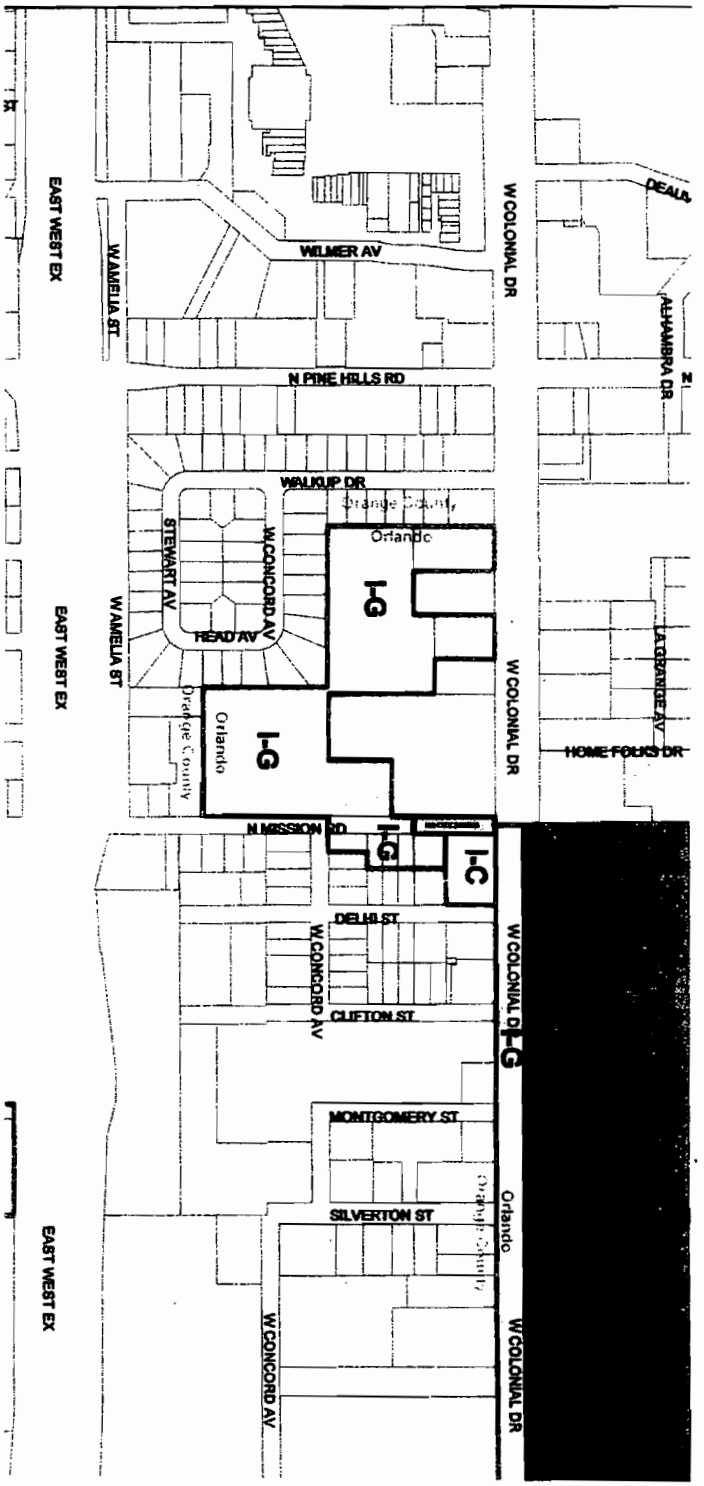
W COLONIAL DR
ALHAMBRA DR
WILMER AV
W AMELIA ST
EAST WEST EX
N PINE HILLS RD
WALKUP DR
Orange County
Orlando
I-G
STEWART AV
W CONCORD AV
READ AV
W AMELIA ST
EAST WEST EX
Orange County
Orlando
I-G
W COLONIAL DR
LA GRANGE AV
HOME FOLKS DR
N MISSION RD
I-G
I-C
DELHI ST
W CONCORD AV
CLIFTON ST
W COLONIAL DR
I-G
MONTGOMERY ST
SILVERTON ST
Orlando
W CONCORD AV
EAST WEST EX
W COLONIAL DR

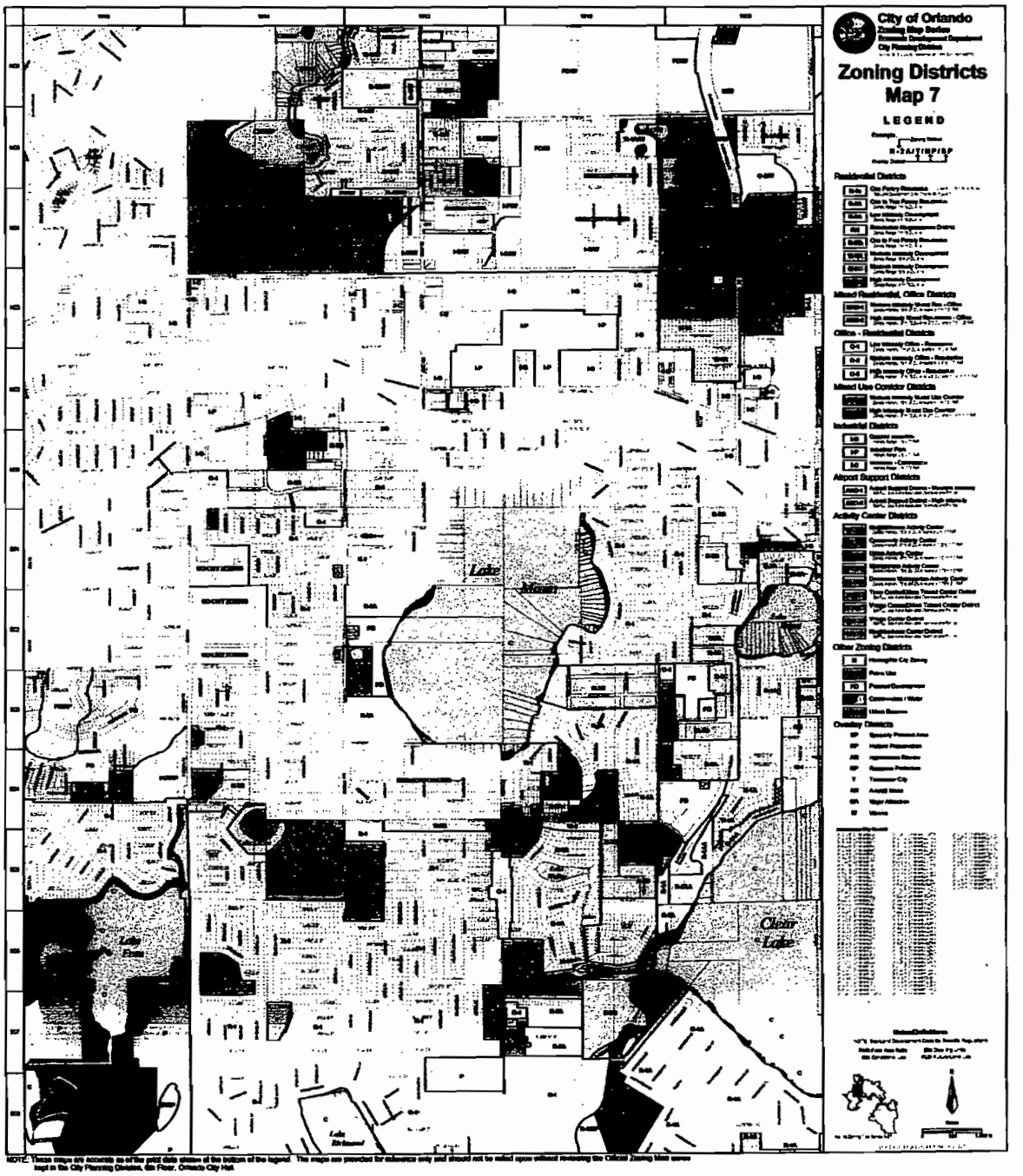

NOTE: These maps are accurate as of the print date shown at the bottom of the legend. The maps are provided for reference only and should not be relied upon without reviewing the Official Zoning Map series kept in the City Planning Division, 6th Floor, Orlando City Hall.

Attachment
Part III – B
Facility Operation

B.1 . Description of operations at the Waste Tire Facility

Empire Tire will provide services to process used and old tires including collection, culling and shredding. Waste tire collection will be offered to both public and waste tire collectors in the state. These tires will be received by an attendant for proper handling and safety. A weigh scale and scale house will be used and there will be an attendant present. Hours of operation will be posted on signs at the entrance gate.

The final product from the processing of these tires will be rubber mulch, tire derived aggregate and tire derived fuel. Processed tires or residuals not appropriate for sale will be disposed in the Omni Waste of Osceola County / WSI.

The facility is surrounded by a block wall as well as a fence with a gate.

B.2 . Equipment for Processing Tires

The plant layout is shown on page 28 and 29 for primary and secondary shredding. Equipment model is 2006 barclay rotoshred primary shredder and specifications is shown on page 30. The distributor of the equipment is Barclay Roto -Shred Inc., located in 3164 Loomis Road, Stockton, California.

The Whole Tire Production Rates is presented in the following table:

Whole Tire Production Rates	Tons/hr
Primary Shred	22 - 24
2 inches / 50 mm chip size	8-12
1 1/7 inches / 38mm chip size	6 -8
1 inch / 25 mm chip size	4 -6

Existing Equipment - 2006 Barclay Rotoshred

Weigh Scale

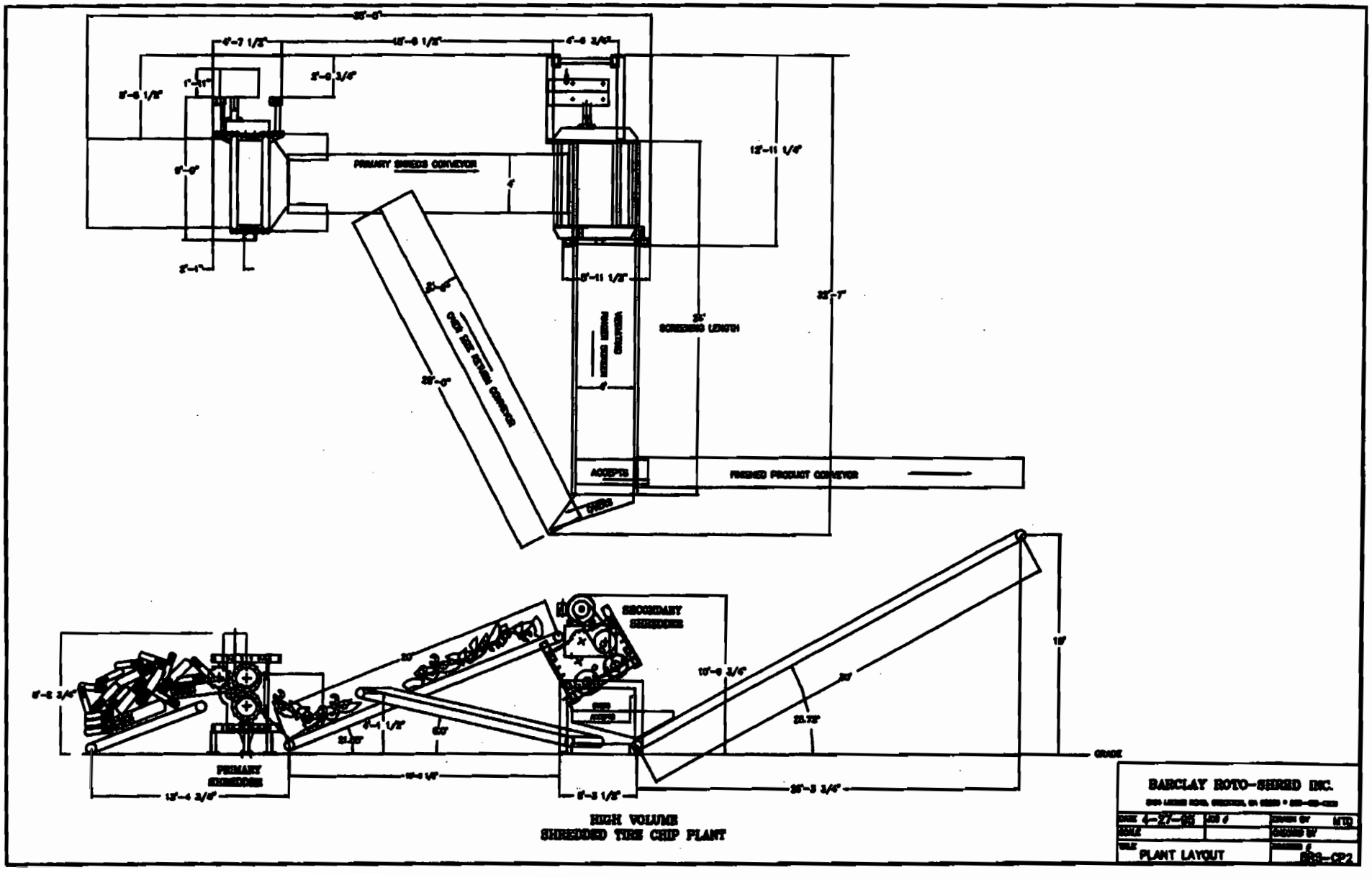

HIGH VOLUME
SHREDDED TIRE CHIP PLANT

BARCLAY ROTO-SHRED INC.

2164 LOOMIS ROAD, STOCKTON, CA 95205 • 209-466-1209

DATE 10-4-95	JOB #	DRAWN BY	MTD
SCALE		CHECKED BY	
TITLE PLANT LAYOUT		DRAWING #	BRS-PP1

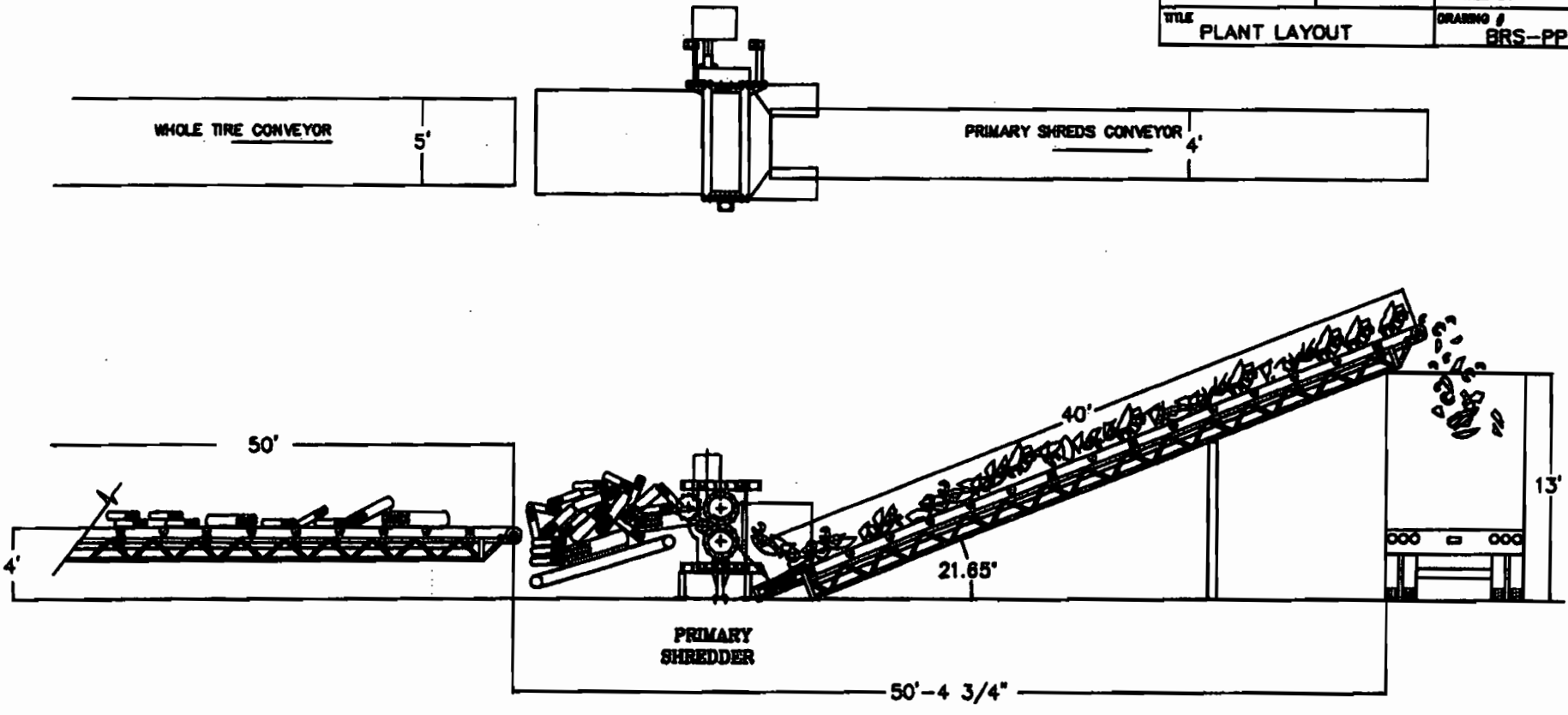

6" PRIMARY TIRE SHREDDER

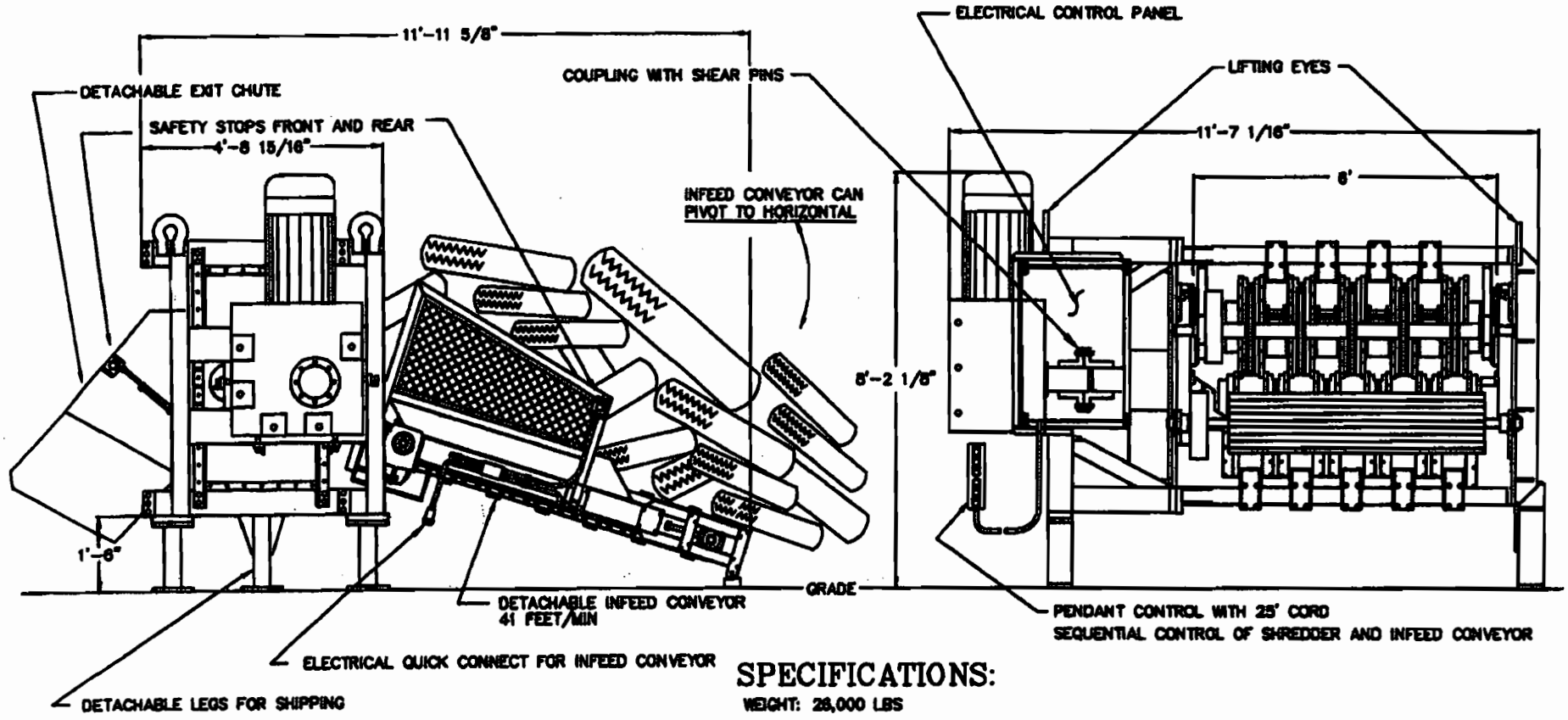

SPECIFICATIONS:

WEIGHT: 28,000 LBS

GEARMOTOR: 50 HP, 480 V, 50 HZ, 3ø, WITH BRAKE

SHAFT RPM: 8 RPM SHAFT DIA: 9.50ø SHAFT ORIENTATION: VERTICAL

CONTROLS: FULLY WIRED TO ACCEPT LINE CONNECTION.
REMOTE MOUNTED START/STOP/REVERSE/FEED START/FEED STOP CONTROL BOX.

SAFETY: EMERGENCY STOP BUTTONS MOUNTED ON FRONT AND BACK OF SHREDDER

CUTTER ROTORS: 10 PER SHAFT @ 6" SPACING CUTTER BOX WIDTH: 72"

SIDE KNIFE: 12 PER ROTOR, 1" THICK AISI D-2 TOOL STEEL
SHARPENABLE WITH SHIMS TO .625" MIN. THICKNESS

STRIPPERS: FIXED WITH REPLACEABLE WEAR PLATES

THROUGHPUT: 320 TRUCK TIRES PER HOUR
1600 PASSENGER TIRES PER HOUR > MIXED @ 16 TONS PER HOUR

MAXIMUM SHREDDING CAPACITY: NO TIRES THAT HAVE A SECTION THICKNESS, WHEN COMPRESSED, OF GREATER THAN 5 1/2"

COVERED UNDER THE FOLLOWING PATENTS: 4,682,522; 4,778,249; 4,901,929; 4,976,176; 5,145,120

BARCLAY ROTO-SHRED INC.

3164 Loomis Road, Stockton, CA 95205
209-466-1209 Fax 209-465-2012

B.3. Description of Waste

1. Collection of Scrap Tires

Empire will collect tires daily using a fleet of 28 foot box trucks, van trailers and roll off containers. Empire is a licensed waste tire collector in the state of Florida.

2. Receipt of Scrap Tires at the Facility

Shipments arriving at the facility will be received by an attendant operating a scale house / office. Attendant will verify all manifests and points of origin and weigh loads of scrap tires. All vehicles will be directed to a sorting station or unloading dock depending on the nature of the load.

a. Culling of Tires

Loads that are determined to have a significant number of used/resale tires will be hand unloaded and graded. All tires culled will then be placed in an appropriate storage site for later re-sale. The expected number of resale tires will be minimal. Five percent or less of daily collection is expected.

b. Sorting / Shipping of Culled Tires

Culled tires will be sorted into categories depending on size an quality. High quality tires will be shipped to one of four retail tires stores owned and operated by Empire Tire. All others will be loaded into trailers to be exported for wholesale. The number of culled tires to be stored at the facility is expected to be minimal due to the demand for these tires.

3. Processing Tires determined to be Scrap

Any received tires determined to have no resale value will then be shredded for other uses.

a. Primary Shredding

Primary shredding will be done through our 2006 barclay rotoshred primary shredder. This shredder is capable of processing approximately 25 tons per hour of whole tires including large OTR tires into 'rough' tire shred. The size of this rough shred varies depending on tire size but averages 6 inches by 12 inches. Tires typically loaded into this machine by loader or excavator.

b. Secondary Shredding

Secondary tire shredding will be done through our Barclay 6" secondary shredder. This shredder is capable of processing 'rough' shred down to a desirable 6 inch nominal chip at a rate of 20 tons per hour. These 6 inch chips can then be sold as feedstock to other processors to be made into other products such as rubber mulch, sport turf, etc. We believe this to be a viable product in the future but minimal at present. Any chips not sold as feed stock will then go to our third phase shredder.

c. Third Phase Shredding

This phase of shredding is done with one of our Columbus Mckinnon 2" tire shredders. This shredder is capable of shredding whole tires down to 2" minus material at a rate of 10 tons per hour. When fed with our 6" material this rate goes up to approximately 17 tons per hr. These 2" chips are then sold as tire derived fuel, septic material or rubber mulch.

B.4. Maximum expected daily throughput

Based on the equipment being used, the maximum daily throughput will be 204 tons per day. This figure is based on the 'weakest link' in the process. The 2 inch CM machine which is capable of producing 17 tons of material per hour.
17tph x 12 hr = 204 tons. Depending on the amount of 6 inch material sold, this value (capability) could greatly increase based on the 6 inch machines capability of 20 tons per hour, however the lower value is being used here. The 204 tons per day

capability is the worst case scenario, where no 6 inch material will be sold and all scrap tires will be processed down to 2" product.

Based on the 204 tons per day estimate times an estimated 300 working days per year, our facility will be capable of producing 61,200 tons of 2" minus material per year.

B.5. Storage and Shipping of Processed Materials and Residuals

a. Storage of 6 inch material, 23 inch chips and residuals. All material on site will be stored in 50' by 200' storage areas. See Site Plan, Figure 4 and plans 24 x 36.

b. Shipping of 6 inch and 2 inch material . All materials will be shipped via walking floor tractor trailer or roll off containers.

c. Removal of residuals. Residual material or loose steel created by our process is minimal. We have experienced 2 percent or less residual material on a similar setup in Canada. Any residual material will be loaded onto walking floor trailer or rolloff container an shipped to an approved facility (ie..Keene Road Landfill, Apopka FL).

B.6 Copies of Emergency Preparedness Manual

(1) Copies of the Emergency Preparedness Manual will be kept at both the on site office as well as the home offices of Empire Tire in Altamonte Springs.

(2) A list of Emergency number will be included.

(3) Signs with these numbers as well as instructions will be strategically placed throughout the facility.

Emergency Preparedness Manual

Emergency Preparedness Manual for Empire Tire Processing Facility

550 Mision Road, Orlando, FL 32808

Empire Tire has a responsibility for minimizing danger to life and property arising from the effects of emergencies on it premises. Emergencies for the purpose of this manual are defined as unexpected, potentially damage – causing events, including fires, hazardous material accidents, power failures or natural disasters. To cope with situations, a comprehensive plan is outlined below. It describes available emergency response systems in the facility, details staff assignments for handling emergencies and set forth the actions to be taken by individuals in dealing with such emergencies. Each employee must know the location of all fire extinguishers, the Emergency Prepared Manual and first aid equipment, as well as the list of emergency contacts and emergency on duty team leaders.

EMERGENCY CONTACTS

- **CONTACT LIST IS LOCATED IN THE MAIN OFFICE OF THE FACILITY**
- **IN EACH FIRE EXTINGUISHER LOCATION (SEE PAGE 41, PART 3.C)**
- **POSTED BY ALL LAND LINES PHONES IN THE FACILITY**

CONTINGENCY PLAN

THIS CONTINGENCY PLAN SHALL BE KEPT AT THE FACILITY AT ALL TIMES AND SHALL BE ACCESIBLE TO ALL FACILITY OPERATORS. THE FOLLOWING IS THE DESCRIPTION OF THE EMERGENCY ORGANIZATION TEAM (E.O.T.) WHO WILL BE RESPONSIBLE FOR IMMEDIATE ACTIONS AS DESCRIBE IN THIS CONTINGENCY PLAN.

EMERGENCY ORGANIZATION TEAM:

- **EMERGENCY TEAM LEADER (E.T.M.)**
  - HAS LEADERSHIP CAPABILITIES, DIRECT ACCESS TO MANAGEMENT, AND IS FAMILIAR WITH ALL ASPECTS OF EMERGENCY RESPONSE.
  - IN THE CASE OF AN EMERGENCY **E.T.M.** MUST NOTIFY ALL PROPER CONTACTS OF EMERGENCY TEAM OF HAZARD. **E.T.M**. MUST ALSO ORGANIZE AND COORDINATE EMERGENCY TEAM.

- **NOTIFIER**
  - REPORTS EMERGENCIES TO FIRE, POLICE, UTILITIES, ETC. MAINTAINS KEY CONTACTS WITH LOCAL FIRE AND POLICE STATION PERSONNEL.

- **FIRE COMMANDER**
  - COMMANDER WILL COORDINATE EMPLOYEES, CLEAR ALL OBSTRUCTIONS AND DIRECT FIRE EQUIPMENT INCLUDING LOCAL STATIONS TO THE SCENE.
  - ALL EMPLOYEES ARE TO BE FAMILIAR WITH LOCATION OF FIRE SAFETY EQUIPMENT AND UNDERSTAND HOW TO OPERATE SUCH EQUIPMENT

- **ELECTRICAL OFFICER**
  - HAS A COMPLETE UNDERSTANDING OF ALL ELECTRICAL SERVICE TO THE FACILITY AND HOW TO CUT THE SERVICE TO THE FACILITY IN THE CASE OF AN EMERGENCY.

WARNING SOURCES

1. EMERGENCY WARNING DEVICES SUCH AS PORTABLE BOAT HORNS AND HANDHELD BULLHORNS WILL BE USED BY SHIFT LEADERS.

2. A PUBLIC ADDRESS SYSTEM CONNECTED TO ALL POINTS IN THE FACILITY WILL BE MAINTAINED AND OPERATED THROUGH THE SCALEHOUSE AND OFFICES.

3. HANDHELD WALKIE – TALKIES WILL BE KEPT ON PERSON AT ALL TIMES BY OFFICE PERSONNEL , SHIFT LEADERS AND ALL MEMBERS OF THE EMERGENCY ORGANIZATION TEAM.

FIRE PREVENTION, CONTROL AND RESPONSE

EMPIRE TIRE ADHERES TO A FIRE RESPONSE PLAN THAT IS IN ACCORDANCE WITH THE RECOMMENDATIONS OF THE FLORIDA FIRE MARSHALL. THE FOLLOWING POLICIES AND ACTIVITIES ARE DESIGNED TO :

- A) PREVENT FIRES
- B) RESPOND EFFECTIVELY TO FIRE EMERGENCIES
- C) MINIMIZE THE EFFECTS OF FIRE THROUGH IMMEDIATE FIRE FIGHTING ACTIONS AND THE MOVEMENT OF PERSONNEL AND EQUIPMENT FORM AREAS OF DANGER.
- D) REPORT AND FOLLOW UP IN THE AFTERMATH OF ANY SUCH FIRE.

1. FIRE PREVENTION

- ALL FIRE PREVENTION MEASURES MUST BE ADHERED AT ALL TIMES.
- ALL FIRE LANES MUST BE KEPT.
- ALL SAFETY EQUIPMENT MUST BE KEPT IN WORKING ORDER.
- STOCKPILES MUST COMPLY TO ALL SPECIFICATIONS AT ALL TIMES.

2. RESPONSE TO A FIRE

IN THE CASE FO A FIRE THE FIRST MEASURE IS TO NOTIFY THE NEAREST SHIFT LEADER.

- A) SHIFT LEADER WILL SOUND NOTIFICATION DEVICES AND NOTIFY PERSONNEL.

- B) OFFICE PERSONNEL WILL NOTIFY VIA PA EVACUATION OF ANY NON EMERGENCY PERSONNEL AND NOTIFY EMERGENCY ORGANIZATION TEAM MEMBERS.
- NOTIFIER WILL IMMEDIATELY NOTIFY LOCAL AUTHORITES OF FIRE.

3. CONTROLLING OF FIRE

- A) IF THE FIRE IS LIMITED TO A MOTOR, WASTEBASKET OR OTHER ISOLATED ITEM AND IS SMALL AND IN IT'S INCIPIENT STAGE, THE EMPLOYEE MAY ATTEMPT TO CONTAIN THE FIRE USING AVAILABLE FIRE EXTINGUISHERS.
- B) ANY LARGE FIRE THAT HAS ALREADY SPREAD OR GROWING SHALL NOT BE FOUGHT BY EMPLOYEES OR ANY MEMBER OF THE E.M.T. ALL EMPLOYESS ARE INSTRUCTED TO IMMEDIATELY EVACUATE THE AREA FOLLOWING THE EVACUATION PLAN.
- C***) FIRE EXTINGUISHER LOCATION***
  - (1) ADMINISTRATION OFFICE
  - (4) ONE ON EACH CORNER COLUMN OF THE METAL SHED ROOF.

EMERGENCY MEDICAL RESPONSE

- THE COMPANY BELIEVES THAT THE MOST PRUDENT RESPONSE FOR ANY INJURED OR ILL EMPLOYEE IS TO SECURE PROFESSIONAL HELP. ACCORDINGLY, IN ORDER TO MINIMIZE THE ADVERSE EFFECTS OF INJURIES OR ILLNESS, ***EMPIRE TIRE'S PRIMARY RESPONSE IS TO ARRANGE FOR THE TRANSPORTATION OF THE INJURED OF ILL EMPLOYEE TO A NEARBY MEDICAL FACILITY AS QUICKLY AS POSSIBLE.***
- ALL INJURIES ARE TO BE REPORTED IMMEDIATELY TO ANY SHIFT LEADER WHO WILL THEN NOTIFY OFFICE PERSONNEL WHO WILL ARRANGE FOR TRANSPORTATION.
- EMPIRE TIRE EMPLOYEES ARE NOT TRAINED IN FIRST AID OR MORE COMPLEX EMERGENCY MEDICAL RESPONSE.
- FIRST AID KITS ARE LOCATED AT ALL LOCATIONS OF FIRE EXTINGUISHERS TO HELP MINIMIZE INJURY DURING TRANSPORTATION AS ARE CONTACT NUMBERS FOR THE NEAREST HOSPITAL.

EMERGENCY CALL LIST

CONTACT	PHONE
AMBULANCE / FIRE /POLICE (EMERGENCY)	911
CITY OF ORLANDO FIRE DEPARTMENT (NON EMERGENCY)	321-235-5200
CITY OF ORLANDO POLICE DEPT. (NON EMERGENCY)	321-235-5300
ORLANDO REGIONAL HOSPITAL	407-841-5111
ORLANDO UTILITIES COMM. (NON EMERGENCY)	407-423-9100
ORLANDO UTILITIES COMM. (EMERGENCY AFTER 5PM)	407-823-9150
VINCENT CONTESTABILE	407-947-7273
CLIFTON MCFADDEN (PLANT SUPERVISOR)	321-303-2096
JAISON BANDIERAMONTE (PLANT SUPERVISOR)	321-277-2893
FIRE, EXPLOSION OR SPILLS	800-424-8802
POISON CONTROL	800-282-3171

ORLANDO FIRE DEPARTMENT
COMPANY SURVEY

Occupancy ID: 25228
Location: 548 N MISSION RD
City/State: ORLANDO, FL

Business Name: EMPIRE TIRE
Business Phone: (407)822-0944
Station No: Station 09 Occupancy: Industrial

Contact Name	Prty	Mailing Address	Day Time Phone	After Hours Phone
VENCENT COTESTABIL	No Descripti	ORLANDO, FL	(407)822-0944	(407)947-7273

Activities:	Assigned to:	Assignment Date:	Schedule Date:
INSP-Company Survey Initial - C	Station, Station 09, C	05/17/2013	06/01/2013

Shift

THIS SURVEY IS PERFORMED BY THE CITY OF ORLANDO FIRE DEPARTMENT IN AN EFFORT TO PREVENT LOSS OF LIFE OR PROPERTY. THIS REPORT ADVISES YOU OF FIRE AND/OR LIFE SAFETY HAZARDS WHICH REQUIRE YOUR IMMEDIATE ATTENTION. EACH OF THE HAZARD(S) INDICATED HEREIN IS IN VIOLATION OF THE ORLANDO FIRE PREVENTION CODE. FOR FURTHER INFORMATION PLEASE CONTACT THE FIRE PREVENTION OFFICE AT 407-246-2386.

A. General Fire Precautions:	YES	NO	N/A
1. Is general storage orderly?	✓		
2. Are combustible waste materials disposed of properly?	✓		
3. Are electrical panels and/or meters unobstructed?	✓		
4. Are all electrical cords and extension cords in good repair? Are extension cords used properly?	✓		
5. Are electrical cover plates on all switches, plugs, and junction boxes?	✓		
6. Are combustible decorations flame retardant?	✓		
7. Are shafts for pipes and cables sealed?	✓		
8. Are fire lanes unobstructed?	✓		
9. Is the yard around the business free of weeds or debris?	✓		
10. If gated property, is optical opening device functioning? Is the emergency code correct?	✓		
B. Maintenance of Exitways:			
1. Are exits clear and unobstructed?	✓		
2. Are doors in or leading to exits unlocked?	✓		
3. Are stairway doors closed?	✓		
4. Are exit signs posted over or on required exit doors and exitways?	✓		
5. Are exit signs and directional signs properly illuminated?	✓		
6. Are emergency lights functioning?	✓		
7. Are door self-closing devices functioning?	✓		
8. Is exit discharge clear?	✓		
C. Fire Safety Education:			
1. Is a written evacuation plan provided?	✓		
2. Are records of training provided and current?	✓		
3. Do employees have knowledge of:			
a. Extinguisher type(s) and use	✓		
b. Evacuation procedure	✓		
c. Fire Systems (alarm-sprinkler-hose-detection)	✓		
d. Fire Safety Practices	✓		
e. Hazardous materials (M.S.D.S. - labeling - handling - storage - etc.)	✓		

D. Fire Protection Equipment:	YES	NO	N/A
1. Are fire extinguishers provided?	✓		
2. Are fire extinguishers conspicuously located and immediately available in the event of fire?	✓		
3. Are fire extinguishers tagged annually, and maintained properly? Date punched: 1/ /13	✓		
4. Are fire extinguishers fully charged and operational?	✓		
5. Is hood extinguishing system protecting commercial cooking equipment tagged semi-annually by a licensed fire equipment contractor? Date punched: ___/___/___			✓
6. Is commercial cooking equipment, hood and ducts free of accumulated grease?			✓
7. If building is sprinklered, is it 100% coverage?			✓
8. Is sprinkler system inspected and tested? (Attach copy of inspection record)			✓
9. Are hoses cabinets and racks unobstructed?			✓
10. Are hoses tested and inspected? Date tested: ___/___/___			✓
11. Is fire pump tested annually? Date tested: ___/___/___			✓
12. Are fire hydrants maintained?			✓
E. Fire Alarm Systems:			
1. Is fire alarm system inspected by a licensed fire alarm contractor? Date tagged: ___/___/___ (Attach copy of last inspection)			✓
2. Are smoke detectors operable?	✓		
F. Special Problems:			
1. Does this business store/handle flammable or combustible liquids in excess of 15 gallons?		✓	
2. Does the business have a special fire extinguishing system for hazardous operation?		✓	
3. Does this business store/handle hazardous chemicals?		✓	

Remarks:

(Note to Customer: Signature below is to acknowledge receipt of this report)

Customer Name (Print)		Signature	Date
Cliff McCadden	x		6/13/13

Company Officer Name (Print)	Emp.#		Signature	Date and Time
J. Stocks (ENG)	13597	x		6/13/13

Form #: FSM 930 Rev 05/2002 *Distribution: Original (WHITE) - Fire Safety Management Division* *Copy (YELLOW) - Business Owner*

Attachment
Part III – C
Closing Plan

Closing Plan

1. The complete closure plan for the facility shall be according to Waste Tire Rule 62-711.700(2) and (3), F.A.C.
2. Upon closing all public access to the site will be terminated. All gates and fences will be locked.
3. All Department and County Regulatory Authorities will be notified in writing prior to closure.
4. All remaining whole tires, processed tires and residual material will be removed.
5. Any solid waste will be removed and sent to an approved solid waste facility for disposal.
6. The Department, City of Orlando, and Orange County will be notified when closure is complete. All closure activities will be completed within 60 days of notification of closure.
7. Empire Tire has estimated the maximum number of storage of materials at any given time to 825 tons. Based upon this number we have estimated closure cost of $43,779.12.

Attachment
Part III – D
Financial Responsibility

FLORIDA DEPARTMENT OF ENVIRONMENTAL PROTECTION
BOB MARTINEZ CENTER
2600 BLAIRSTONE ROAD MS 4565
TALLAHASSEE, FLORIDA 32399-2400

RICK SCOTT
GOVERNOR

HERSCHEL T. VINYARD JR.
SECRETARY

September 11, 2013

Via e-mail: vincerecyclingempire@yahoo.com

Mr. Vincent Contestabile
Empire Tire of Edgewater, LLC
4888 West Colonial Drive
Orlando, Florida 32808

Re: WACS 95062 – Empire Tire

Dear Mr. Contestabile:

I reviewed the documentation submitted to demonstrate financial assurance for the above referenced facility and find it is in order. PNC Bank, National Association standby trust fund agreement, entered into as of August 8, 2013 and with account number 20-50-002-4793401, is acceptable as to form and content. The existing PNC Bank, National Association letter of credit remains adequate. Therefore, Empire Tire is in compliance with the financial assurance requirements of 40 CFR Part 264, Subpart H, as adopted by reference in Rule 62-701.630, Florida Administrative Code, at this time.

Please contact me at (850) 245-8740 if you have any questions.

Sincerely,

S T Eldredge

Susan Eldredge
Environmental Specialist
Solid Waste Section

cc: Financial Assurance Coordinator, DEP/Tallahassee
Reggie Phillips, DEP/Orlando

Mail Document and Statements to:
Solid Waste Financial Coordinator
Florida Department of Environmental Protection
2600 Blair Stone Road MS 4565
Tallahassee, Florida 32399-2400

DEP Form # 62-701.900(5)(h)
Form Title SW Fac. Standby Trust Fund Agreement
Form Effective Date August 12, 2012
Incorporated in Rule 62-701.630(6)

STATE OF FLORIDA
SOLID WASTE FACILITY STANDBY TRUST FUND AGREEMENT

Check Appropriate Box(es): ☒ Closing ☐ Long-Term Care ☐ Corrective Action

TRUST AGREEMENT, the "Agreement," entered into as of 8-8-2013 (Date), by and between Empire Tire of Edgewater, LLC (Name of Owner or Operator), a Florida (Name of State) limited liability company (Legal Entity Type (e.g., proprietorship, partnership, corporation)), the "Grantor," and PNC Bank, National Association (Name of Corporate Trustee), Two PNC Plaza, 6200 Liberty Avenue, Pittsburg, PA 15222 (Address of Corporate Trustee), a national bank (Insert above "incorporated in the state of [state]" or "a national bank"), the "Trustee," for account number 20-50-002-4793401.

WHEREAS, the Florida Department of Environmental Protection (FDEP), an agency of the state of Florida, has established certain regulations applicable to the Grantor, requiring that an owner or operator of a solid waste management facility shall provide assurance that funds will be available when needed for the "Required Action" of the facility,

WHEREAS, the Grantor has elected to establish a trust to provide all or part of such financial assurance for the facilities identified herein,

WHEREAS, the Grantor, acting through its duly authorized officers, has selected the Trustee to be the trustee under this agreement, and the Trustee is willing to act as trustee,

NOW, THEREFORE, the Grantor and the Trustee agree as follows:

Section 1. Definitions. As used in this Agreement:

(a) The term "Grantor" means the owner or operator who enters into this Agreement and any successors or assigns of the Grantor.
(b) The term "Trustee" means the Trustee who enters into this Agreement and any successor Trustee.
(c) The term "FDEP" means the Florida Department of Environmental Protection, an Agency of the state of Florida or any successor thereof.
(d) The term "Required Action," as used in this document means closing, long-term care, or corrective action, or any combination of these, which is checked above.

Section 2. Identification of Facilities and Cost Estimates. This Agreement pertains to the facilities and cost estimates identified on attached Schedule A.
On Schedule A, for each facility list the FDEP Identification Number, facility name, site address, and the current Required Action cost estimates, or portions thereof, for which financial assurance is demonstrated by this Agreement.

Section 3. Standby Trust. This Trust shall remain dormant until funded with the proceeds from financial instrument(s) as directed by the FDEP or from any other source. The Trustee shall have no duties or responsibilities beyond safekeeping this document and annually submitting to FDEP a valuation statement. Upon funding, this Trust shall become active and be administered pursuant to the terms of this instrument.

Section 4. Establishment of Fund. The Grantor and the Trustee hereby establish a trust fund (the Fund), for the benefit of the FDEP. The Grantor and the Trustee intend that no third party have access to the Fund except as herein provided. Any property transferred to the Trustee is referred to as the Fund, together with all earnings and profits thereon, less any payments or distributions made by the Trustee pursuant to this Agreement. The Fund shall be held by the Trustee, IN TRUST, as hereinafter provided. The Trustee shall not be responsible nor shall it undertake any responsibility for the amount or adequacy of, nor any duty to collect from the Grantor, any payments necessary to discharge any liabilities of the Grantor established by the FDEP.

Section 5. Payment for Closure, Post-Closure Care, and Corrective Action. The Trustee shall make payments from the Fund as the FDEP Secretary, or the Secretary's designee (the "designee"), shall direct, in writing, to provide for the payment of the costs of Required Action of the facilities covered by this Agreement. The Trustee shall reimburse the Grantor or other persons as specified by the FDEP Secretary, or designee, from the Fund for Required Action expenditures in such amounts as the FDEP Secretary, or designee, shall direct in writing. In addition, the Trustee shall refund to the Grantor such amounts as the FDEP Secretary, or designee, specifies in writing. Upon refund, such funds shall no longer constitute part of the Fund as defined herein.

Section 6. Payments Comprising the Fund. Payments made to the Trustee for the Fund shall consist of cash or securities acceptable to the Trustee and may consist solely of proceeds from financial instrument(s) as directed by the FDEP.

Section 7. Trustee Management. The Trustee shall invest and reinvest the principal and income of the Fund and keep the Fund invested as a single fund, without distinction between principal and income, in accordance with general investment policies and guidelines which the grantor may communicate in writing to the Trustee from time to time, subject, however, to the provisions of this Section. In investing, reinvesting, exchanging, selling, and managing the Fund, the Trustee shall discharge his duties with respect to the trust fund solely in the interest of the beneficiary and with the care, skill, prudence, and diligence under the circumstances then prevailing which persons of prudence, acting in a like capacity and familiar with such matters, would use in the conduct of an enterprise of a like character and with like aims; except that:

(a) Securities or other obligations of the Grantor, or any other owner or operator of the facilities, or any of their affiliates as defined in the Investment Company Act of 1940, as amended, 15 U.S.C. 80a-2.(a), shall not be acquired or held, unless they are securities or other obligations of the Federal or a State government;
(b) The Trustee is authorized to invest the Fund in time or demand deposits of the Trustee, to the extent insured by an agency of the Federal or a State government; and
(c) The Trustee is authorized to hold cash awaiting investment or distribution uninvested for a reasonable time and without liability for the payment of interest thereon.

Section 8. Commingling and Investment. The Trustee is expressly authorized in its discretion:

(a) To transfer from time to time any or all of the assets of the Fund to any common, commingled, or collective trust fund created by the Trustee in which the Fund is eligible to participate, subject to all of the provisions thereof, to be commingled with the assets of other trusts participating therein; and
(b) To purchase shares in any investment company registered under the Investment Company Act of 1940, 15 U.S.C. 80a-1 et seq., including one which may be created, managed, underwritten, or to which investment advice is rendered or the shares of which are sold by the Trustee. The Trustee may vote such shares in its discretion.

Section 9. Express Power of Trustee. Without in any way limiting the powers and discretions conferred upon the Trustee by the other provisions of this Agreement or by law, the Trustee is expressly authorized and empowered:

(a) To sell, exchange, convey, transfer, or otherwise dispose of any property held by it, by public or private sale. No person dealing with the Trustee shall be bound to see to the application of the purchase money or to inquire into the validity or expediency of any such sale or other disposition;
(b) To make, execute, acknowledge, and deliver any and all documents of transfer and conveyance and any and all other instruments that may be necessary or appropriate to carry out the powers herein granted;
(c) To register any securities held in the Fund in its own name or in the name of a nominee and to hold any security in bearer form or in book entry, or to combine certificates representing such securities with certificates of the same issue held by the Trustee in other fiduciary capacities, or to deposit or arrange for

the deposit of such securities in a qualified central depository even though, when so deposited, such securities may be merged and held in bulk in the name of the nominee of such depository with other securities deposited therein by another person, or to deposit or arrange for the deposit of any securities issued by the United States Government, or any agency or instrumentality thereof, with a Federal Reserve bank, but the books and records of the Trustee shall at all times show that all such securities are part of the Fund;

(d) To deposit any cash in the Fund in interest-bearing accounts maintained or savings certificates issued by the Trustee, in its separate corporate capacity, or in any other banking institution affiliated with the Trustee, to the extent insured by an agency of the Federal or a State government; and

(e) To compromise or otherwise adjust all claims in favor of or against the Fund.

Section 10. Taxes and Expenses. All taxes of any kind that may be assessed or levied against or in respect of the Fund and all brokerage commissions incurred by the Fund shall be paid from the Fund. All other expenses incurred by the Trustee in connection with the administration of this Trust, including fees for legal services rendered to the Trustee, the compensation of the Trustee to the extent not paid directly by the Grantor, and all other proper charges and disbursements of the Trustee shall be paid from the Fund.

Section 11. Annual Valuation. The Trustee shall annually, at least 30 days prior to the anniversary date of establishment of the Fund, furnish to the Grantor and to the Secretary of the FDEP, or designee, a statement confirming the value of the Trust. Any securities in the Fund shall be valued at market value as of no more than 60 days prior to the anniversary date of establishment of the fund. The failure of the Grantor to object in writing to the Trustee within 90 days after the statement has been furnished to the Grantor and the FDEP Secretary, or designee, shall constitute a conclusively binding assent by the Grantor, barring the Grantor from asserting any claim or liability against the Trustee with respect to matters disclosed in the statement.

Section 12. Advice of Counsel. The Trustee may from time to time consult with counsel, who may be counsel to the Grantor, with respect to any question arising as to the construction of this Agreement or any action to be taken hereunder. The Trustee shall be fully protected, to the extent permitted by law, in acting upon the advice of counsel.

Section 13. Trustee Compensation. The Trustee is authorized to charge against the principal of the Trust its published Trust fee schedule in effect at the time services are rendered.

Section 14. Successor Trustee. The Trustee may resign or the Grantor may replace the Trustee, but such resignation or replacement shall not be effective until the Grantor has appointed a successor Trustee and this successor accepts the appointment. The successor trustee shall have the same powers and duties as those conferred upon the Trustee hereunder. Upon the successor trustee's acceptance of the appointment, the Trustee shall assign, transfer, and pay over to the successor trustee the funds and properties then constituting the Fund. If for any reason the Grantor cannot or does not act in the event of the resignation of the Trustee, the Trustee may apply to a court of competent jurisdiction for the appointment of a successor trustee or for instructions. The successor trustee shall specify the date on which it assumes administration of the trust in a writing sent to the Grantor, FDEP Secretary, or designee, and the present Trustee by certified mail 10 days before such change becomes effective. Any expenses incurred by the Trustee as a result of any of the acts contemplated by this Section shall be paid as provided in Section 10.

Section 15. Instructions to the Trustee.* All orders, requests, and instructions by the Grantor to the Trustee shall be in writing, signed by such persons as are designated in the attached Exhibit A or such other designees as the Grantor may designate by amendment to Exhibit A. The Trustee shall be fully protected in acting without inquiry in accordance with the Grantor's orders, requests, and instructions. All orders, requests, and instructions by the FDEP Secretary, or designee, to the Trustee shall be in writing, signed by the FDEP Secretary, or the designee, and the Trustee shall act and shall be fully protected in acting in accordance with such orders, requests, and instructions. The Trustee shall have the right to assume, in the absence of written notice to the contrary, that no event constituting a change or a termination of the authority of any person to act on behalf of the Grantor or the FDEP hereunder has occurred. The Trustee shall have no duty to act in the absence of such orders, requests, and instructions from the Grantor and/or the FDEP, except as provided for herein.

* Note: pursuant to Section 5, the authority to direct payments, reimbursements and refunds is given soley to the FDEP Secretary or designee.

Section 16. Amendment of Agreement. This Agreement may be amended by an instrument in writing executed by the Grantor, the Trustee, and the FDEP Secretary, or designee, or by the Trustee and the FDEP Secretary, or designee, if the Grantor ceases to exist.

Section 17. Irrevocability and Termination. Subject to the right of the parties to amend this Agreement as provided in Section 16, this Trust shall be irrevocable and shall continue until terminated at the written agreement of the Grantor, the Trustee, and the FDEP Secretary, or designee, or by the Trustee and the FDEP Secretary, or designee, if the Grantor ceases to exist. Upon termination of the Trust, all remaining trust property, less final trust administration expenses, shall be delivered to the Grantor.

Section 18. Immunity and Indemnification. The Trustee shall not incur personal liability of any nature in connection with any act or omission, made in good faith, in the administration of this Trust, or in carrying out any directions by the Grantor or the FDEP Secretary, or designee, issued in accordance with this Agreement. The Trustee shall be indemnified and saved harmless by the Grantor or from the Trust Fund, or both, from and against any personal liability to which the Trustee may be subjected by reason of any act or conduct in its official capacity, including all expenses reasonably incurred in its defense in the event the Grantor fails to provide such defense.

Section 19. Choice of Law. This Agreement shall be administered, construed, and enforced according to the laws of the State of Florida.

Section 20. Interpretation. As used in this Agreement, words in the singular include the plural and words in the plural include the singular. The descriptive headings for each Section of this Agreement shall not affect the interpretation or the legal efficacy of this Agreement.

IN WITNESS WHEREOF the parties have caused this Agreement to be executed by their respective officers duly authorized and their corporate seals to be hereunto affixed and attested as of the date first above written.

The persons whose signatures appear below hereby certify that the wording of this Agreement is identical to the wording as adopted and incorporated by reference in Rule 62-701.630(6)(a), F.A.C.

GRANTOR

Authorized Signature for Grantor

Vincent Contestabile, manager/mbr.
Type Name and Title

407-947-0273
Telephone Number

vincerecyclyingempire@yahoo.com
E-mail Address

TRUSTEE

Authorized Signature for Trustee

J Terry Strange Director
Type Name and Title

502.581.2491
Telephone Number

Terry.Strange@PNC.com
E-mail Address

Signature of Witness or Notary

Printed Name of Witness or Notary Seal

8/22/13
Date

CERTIFICATION OF ACKNOWLEDGMENT FOR SOLID WASTE FACILITY STANDBY TRUST FUND AGREEMENT

State of Florida County of Orange

The foregoing instrument was acknowledged before me this 8 day of August, 2013,

by Vincent Contestabile as MGRM of
Name of person Title

Empire Tire of Edgewater LLC, the legal entity described in and which executed
Owner or Operator

the above instrument.

AMY BENISON
MY COMMISSION # EE138976
EXPIRES October 17, 2015
(407) 398-0153 FloridaNotaryService.com

Amy Benison (SEAL▶)
Signature of Notary Public

Personally Known ☒ or Produced Identification ☐

Type of Identification Produced _____

SCHEDULE A

This Agreement demonstrates financial assurance for cost estimate(s) on file with FDEP for the following facility(ies).

Indicate Required Action amounts for each facility separately.
Trust fund valuation statements may function as the required updating of Schedule A.

		Required Action	Initial Amount
FDEP I.D. No.:	95062		
Facility Name:	Empire Tire	Closing:	$ 43,779.12
Site Address:	550 Mission Road	Long-term Care:	$
	Orlando FL	Corrective Action:	$

EXHIBIT A

All orders, requests, and instructions by the Grantor to the Trustee shall be in writing and signed by one of the following persons:

Vincent Contestabile, owner/manager
Type Name and Title

Type Name and Title

Type Name and Title

EMPIRE TIRE OF EDGEWATER
550 MISSION ROAD, ORLANDO, FL, 32808

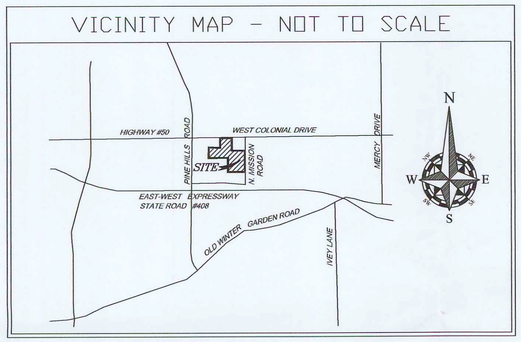

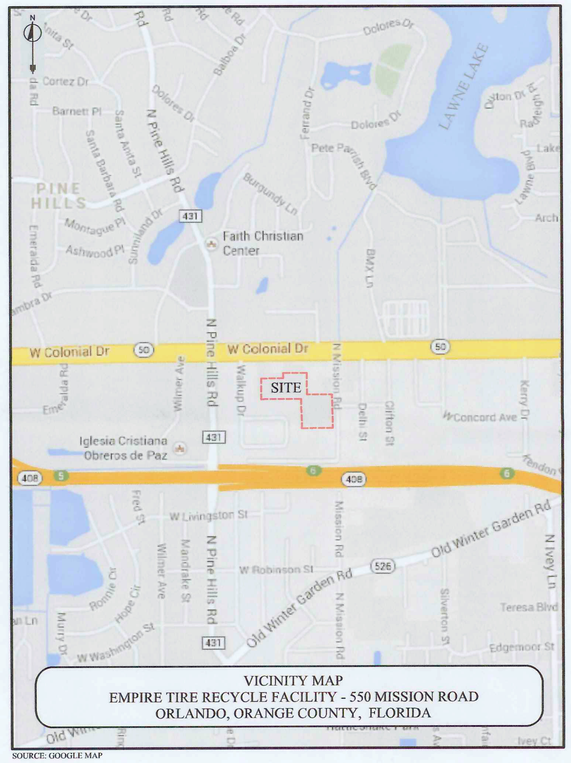

VICINITY MAP
EMPIRE TIRE RECYCLE FACILITY - 550 MISSION ROAD
ORLANDO, ORANGE COUNTY, FLORIDA

SOURCE: GOOGLE MAP

1,000 FEET RADIUS VICINITY MAP

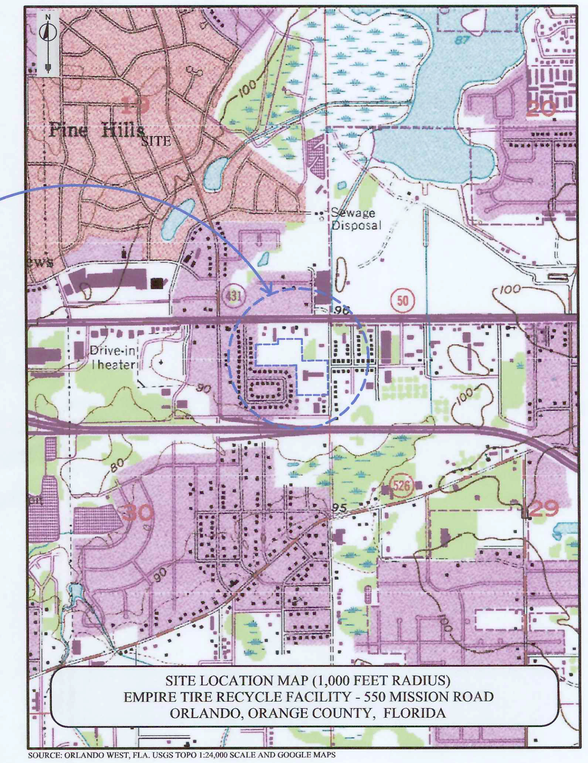

SITE LOCATION MAP (1,000 FEET RADIUS)
EMPIRE TIRE RECYCLE FACILITY - 550 MISSION ROAD
ORLANDO, ORANGE COUNTY, FLORIDA

SOURCE: ORLANDO WEST, FLA. USGS TOPO 1:24,000 SCALE AND GOOGLE MAPS

10/8/2013

CARLOS A. MORENO
LICENSE
No. 76540
STATE OF FLORIDA
PROFESSIONAL ENGINEER

Permit Renewal, Permit no. WT -48-0287891-001

Carlos A. Moreno Jusino, P.E.
Florida License #76540
2312 Academy Cir W Apt. 103
Kissimmee, FL 34744

RECEIVED
OCT 09 2013
DEP Central Dist.

INDEX

SHEET 1 - TITLE SHEET, VICINITY AND SITE LOCATION MAPS
SHEET 2 - BOUNDARY AND TOPOGRAPHIC SURVEY
SHEET 3 - SITE PLAN

ELLIOT DELGADO HERNANDEZ
EDH
EDH CAD DRAWINGS SERVICES

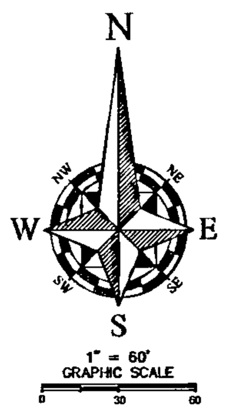

VICINITY MAP - NOT TO SCALE

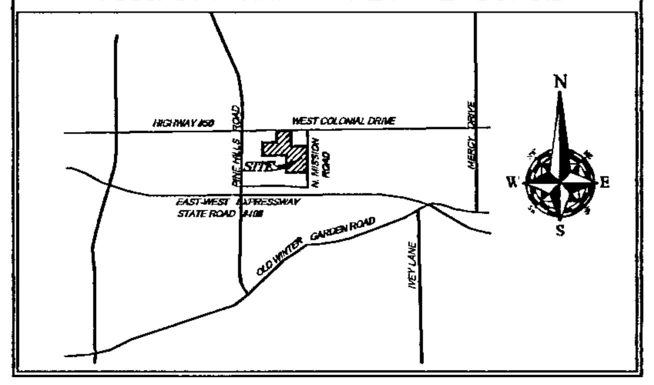

1" = 60'
GRAPHIC SCALE
0 30 60

MISCELLANEOUS NOTES

1. THIS SURVEY WAS PERFORMED WITH BENEFIT OF CHICAGO TITLE INSURANCE COMPANY, COMMITMENT OF TITLE INSURANCE ORDER NUMBER 4081295, CUSTOMER REFERENCE 6096-3702, HAVING AN EFFECTIVE DATE OF OCTOBER 24, 2012 AT 8:00 AM.

2. THE SUBJECT PROPERTY ACCESSES THE PUBLIC RIGHT-OF-WAY OF WEST COLONIAL DRIVE BY A CURB CUTS LOCATED ALONG THE NORTH LINE OF THE SUBJECT PROPERTY AND BY THE PUBLIC RIGHT-OF-WAY OF NORTH MISSION ROAD BY ASPHALT APRONS LOCATED ALONG THE EAST LINE OF THE SUBJECT PROPERTY. SAID CURB CUTS/ASPHALT APRONS ARE LABELED "SITE ACCESS".

3. THERE IS NO APPARENT EVIDENCE OF CEMETERIES, GRAVE SITES OR BURIAL GROUNDS WITHIN THE SUBJECT PROPERTY.

4. THE LOCATION OF UTILITIES SHOWN HEREON ARE PER OBSERVED EVIDENCE.

5. THERE IS NO APPARENT EVIDENCE EARTH MOVING WORK, BUILDING CONSTRUCTION OR BUILDING ADDITIONS WITHIN THE SUBJECT PROPERTY.

6. THIS SURVEY IS BASED ON THE LEGAL DESCRIPTION AS PROVIDED BY THE CLIENT.

7. DO NOT RECONSTRUCT PROPERTY LINES FROM INTERIOR IMPROVEMENTS. (BUILDINGS, FENCES ECT...)

8. NO FOOTINGS OR OVERHANGS HAVE BEEN LOCATED EXCEPT AS SHOWN.

9. NO UNDERGROUND IMPROVEMENTS OR UTILITIES HAVE BEEN LOCATED EXCEPT AS SHOWN.

10. NO WETLANDS AND/OR OTHER NATURAL FEATURES HAVE BEEN LOCATED EXCEPT AS SHOWN.

11. THIS SURVEY SHALL NOT BE USED FOR DESIGN OR CONSTRUCTION WITH OUT PRIOR WRITTEN AUTHORIZATION FROM THE SIGNING SURVEYOR.

12. THIS SURVEY IS NOT VALID WITHOUT THE SIGNATURE AND THE ORIGINAL RAISED SEAL OF A FLORIDA LICENSED SURVEYOR AND MAPPER.

13. THE BEARINGS SHOWN HEREON ARE BASED ON THE NORTH LINE OF SECTION 30-22 SOUTH-29 EAST, BEING N89°52'10"E AN ASSUMED MERIDIAN AND ARE INTENDED TO BE USED FOR ANGULAR DETERMINATION ONLY.

14. ELEVATIONS SHOWN HEREON ARE RELATIVE TO THE CITY OF ORLANDO. ORANGE COUNTY ENGINEERING DEPARTMENT'S DATUM AND ARE BASED ON THE FOLLOWING BENCHMARKS BEING A 2-1/4" ORANGE COUNTY BRASS DISK STAMPED # C-1055-005 HAVING A PUBLISHED ELEVATION OF 94.47 (NORTH AMERICAN VERTICAL DATUM OF 1988).

LEGEND OF SYMBOLS & ABBREVIATIONS

A/C=AIR CONDITIONER, BB=BEARING BASIS, BLDG=BUILDING, C=CALCULATED, CB=CONCRETE BLOCK, CH=CHORD, CHBRG=CHORD BEARING, CM=CONCRETE MONUMENT, CMA=CORNER NOT ACCESSIBLE, CONC=CONCRETE, COV=COVERED, CPP=CONCRETE POWER POLE, D=DESCRIBED, D/B/A=DOING BUSINESS AS, DE=DRAINAGE EASEMENT, DUE=DRAINAGE AND UTILITY EASEMENT, EOP=EDGE OF PAVEMENT, EOW=EDGE OF WATER, F=FIELD, FF ELEV=FINISHED FLOOD ELEVATION, FDC= FIRE DEPARTMENT CONNECTION, ID=IDENTIFICATION, IR=IRON REBAR, IP=IRON PIPE, L=ARC LENGTH, LS=LAND SURVEYOR, LB=LAND SURVEYING BUSINESS, M=MEASURED, NR=NOT RADIAL, OR=OFFICIAL RECORDS, P=PLAT, PC=POINT OF CURVATURE, PCP=PERMANENT CONTROL POINT, PI=POINT OF INTERSECTION, POB=POINT OF BEGINNING, POC=POINT OF COMMENCEMENT, PRM=PERMANENT REFERENCE MONUMENT, PT=POINT OF TANGENT, R=RADIUS, RAD=RADIAL, RES=RESIDENCE, R/W=RIGHT OF WAY, S/W=SIDEWALK, TOB=TOP OF BANK, TX=ELECTRIC TRANSFORMER BOX, UR=UTILITY ROOM, UE=UTILITY EASEMENT, WF=WOOD FRAME, WPP=WOOD POWER POLE, OUC=ORLANDO UTILITY COMMISSION

=WATER VALVE
=FIRE HYDRANT
=WATER METER

FLOOD NOTE

BY GRAPHIC PLOTTING ONLY, THIS PROPERTY IS IN ZONE X OF THE FLOOD INSURANCE RATE MAP, COMMUNITY NO. 120186, MAP NUMBER 12095C 0240 F WHICH BEARS AN EFFECTIVE DATE OF 09/25/09 AND IS NOT IN A SPECIAL FLOOD HAZARD AREA. AS SHOWN ON THE FEMA WEBSITE (HTTP://MSC.FEMA.GOV). NO FIELD SURVEYING WAS PERFORMED TO DETERMINE THIS ZONE, AND A FLOOD ELEVATION CERTIFICATE MAY BE NEEDED TO VERIFY THIS DETERMINATION OR APPLY FOR A VARIANCE FROM THE FEDERAL EMERGENCY MANAGEMENT AGENCY.

ITEMS CORRESPONDING TO SCHEDULE B-II

1. DEFECTS, LIENS, ENCUMBRANCES, ADVERSE CLAIMS OR OTHER MATTERS, IF ANY, CREATED, FIRST APPEARING IN THE PUBLIC RECORDS OR ATTACHING SUBSEQUENT TO THE EFFECTIVE DATE HEREOF BUT PRIOR TO THE DATE THE PROPOSED INSURED ACQUIRES FOR VALUE OF RECORD THE ESTATE OR INTEREST OR MORTGAGE THEREON COVERED BY THIS COMMITMENT.

2. TAXES AND ASSESSMENTS FOR THE YEAR 2012 AND SUBSEQUENT YEARS, WHICH ARE NOT YET DUE AND PAYABLE.

3. STANDARD EXCEPTIONS:

A. EASEMENTS, CLAIMS OF EASEMENTS, BOUNDARY LINE DISPUTES, OVERLAPS, ENCROACHMENTS OR OTHER MATTERS NOT SHOWN BY THE PUBLIC RECORDS WHICH WOULD BE DISCLOSED BY AN ACCURATE SURVEY OF THE LAND.

B. RIGHTS OR CLAIMS OF PARTIES IN POSSESSION NOT SHOWN BY THE PUBLIC RECORDS.

C. ANY LIEN, OR RIGHT TO A LIEN, FOR SERVICES, LABOR, OR MATERIALS HERETOFORE OR HEREAFTER FURNISHED, IMPOSED BY LAW AND NOT SHOWN BY THE PUBLIC RECORDS.

D. TAXES OR ASSESSMENTS WHICH ARE NOT SHOWN AS EXISTING LIENS IN THE PUBLIC RECORDS.

4. ANY CLAIM THAT ANY PORTION OF THE INSURED LAND IS SOVEREIGN LANDS OF THE STATE OF FLORIDA, INCLUDING SUBMERGED, FILLED OR ARTIFICIALLY EXPOSED LANDS ACCRETED TO SUCH LAND.

5. ANNEXATION AGREEMENT BETWEEN JAMES UTLEY AND JOANN UTLEY, AND THE CITY OF ORLANDO RECORDED APRIL 7, 2000 IN OFFICIAL RECORDS BOOK 5977, PAGE 42.

6. ORLANDO UTILITIES COMMISSION UTILITY EASEMENT (EMPIRE TIRE) RECORDED OCTOBER 23, 2008 IN OFFICIAL RECORDS BOOK 9779, PAGE 5447. AS SHOWN

7. ACCESS AGREEMENT BETWEEN VINCENT CONTESTABILE AND AUTOMOTIVE PROPERTIES OF ORLANDO, LLC RECORDED MARCH 30, 2007 IN OFFICIAL RECORDS BOOK 9171, PAGE 2923; AS RE-EXECUTED AND RE-RECORDED OCTOBER 2, 2007 IN OFFICIAL RECORDS BOOK 9455, PAGE 1608. AS SHOWN

8. RIGHTS OF TENANTS OCCUPYING ALL OR PART OF THE INSURED LAND UNDER UNRECORDED LEASES OR RENTAL AGREEMENTS.

SCHEDULE B-II NOTE:
ITEMS 6 AND 7 ARE PLOTTABLE AND ARE SHOWN HEREON. THE REMAINING ITEMS ARE NOT PLOTTABLE AND/OR NOT SURVEY RELATED.

LEGAL DESCRIPTION AS PROVIDED

LEGAL DESCRIPTION AS PROVIDED IN CHICAGO TITLE INSURANCE COMPANY, COMMITMENT OF TITLE INSURANCE ORDER NUMBER 4081295, CUSTOMER REFERENCE 6096-3702, HAVING AN EFFECTIVE DATE OF OCTOBER 24, 2012 AT 8:00 AM:

COMMENCE AT THE NORTHEAST CORNER OF SECTION 30, T-22-S, R-29-E, ORANGE COUNTY, FLORIDA; THENCE SOUTH 00 DEGREES 13 MINUTES 03 SECONDS EAST ALONG THE EAST LINE OF SAID SECTION 30, A DISTANCE OF 566.63 FEET; THENCE LEAVING SAID EAST LINE, SOUTH 89 DEGREES 41 MINUTES 17 SECONDS WEST, A DISTANCE OF 30.00' TO A POINT ON THE WEST RIGHT-OF-WAY LINE OF NORTH MISSION ROAD AND THE POINT OF BEGINNING OF THE PARCEL HEREIN DESCRIBED; THENCE SOUTH 00 DEGREES 13 MINUTES 03 SECONDS EAST, A DISTANCE OF 476.48'; THENCE SOUTH 89 DEGREES 21 MINUTES 23 SECONDS WEST, A DISTANCE OF 436.68' TO A POINT ON A EAST LINE OF GRIFFITHS ADDITION, BLOCK "A", PER PLAT BOOK T, PAGE 5 OF THE PUBLIC RECORDS OF ORANGE COUNTY, FLORIDA; THENCE ALONG THE EAST AND NORTH LINES OF SAID GRIFFITHS ADDITION, BLOCK "A", THE FOLLOWING TWO COURSES 1. NORTH 00 DEGREES 12 MINUTES 14 SECONDS WEST, A DISTANCE OF 417.39'; 2. NORTH 89 DEGREES 45 MINUTES 49 SECONDS WEST, A DISTANCE OF 550.41'; THENCE LEAVING SAID NORTH LINE OF GRIFFITHS ADDITION, BLOCK "A", NORTH 00 DEGREES 05 MINUTES 30 SECONDS WEST, A DISTANCE OF 287.55'; THENCE NORTH 89 DEGREES 41 MINUTES 17 SECONDS EAST, A DISTANCE OF 306.29'; THENCE NORTH 00 DEGREES 03 MINUTES 47 SECONDS WEST, A DISTANCE OF 268.80' TO THE SOUTH RIGHT-OF-WAY LINE OF WEST COLONIAL DRIVE (STATE ROAD NO. 50); THENCE ALONG SAID SOUTH RIGHT-OF WAY LINE, NORTH 89 DEGREES 41 MINUTES 17 SECONDS EAST, A DISTANCE OF 328.32'; THENCE LEAVING SAID SOUTH RIGHT-OF-WAY LINE, SOUTH 00 DEGREES 13 MINUTES 03 SECONDS EAST, A DISTANCE OF 500.00'; THENCE NORTH 89 DEGREES 41 MINUTES 17 SECONDS EAST, A DISTANCE OF 351.00' TO THE POINT OF BEGINNING; SAID DESCRIBED PARCEL CONTAINING 10.94 ACRES, MORE OR LESS.

BOUNDARY AND TOPOGRAPHIC SURVEY

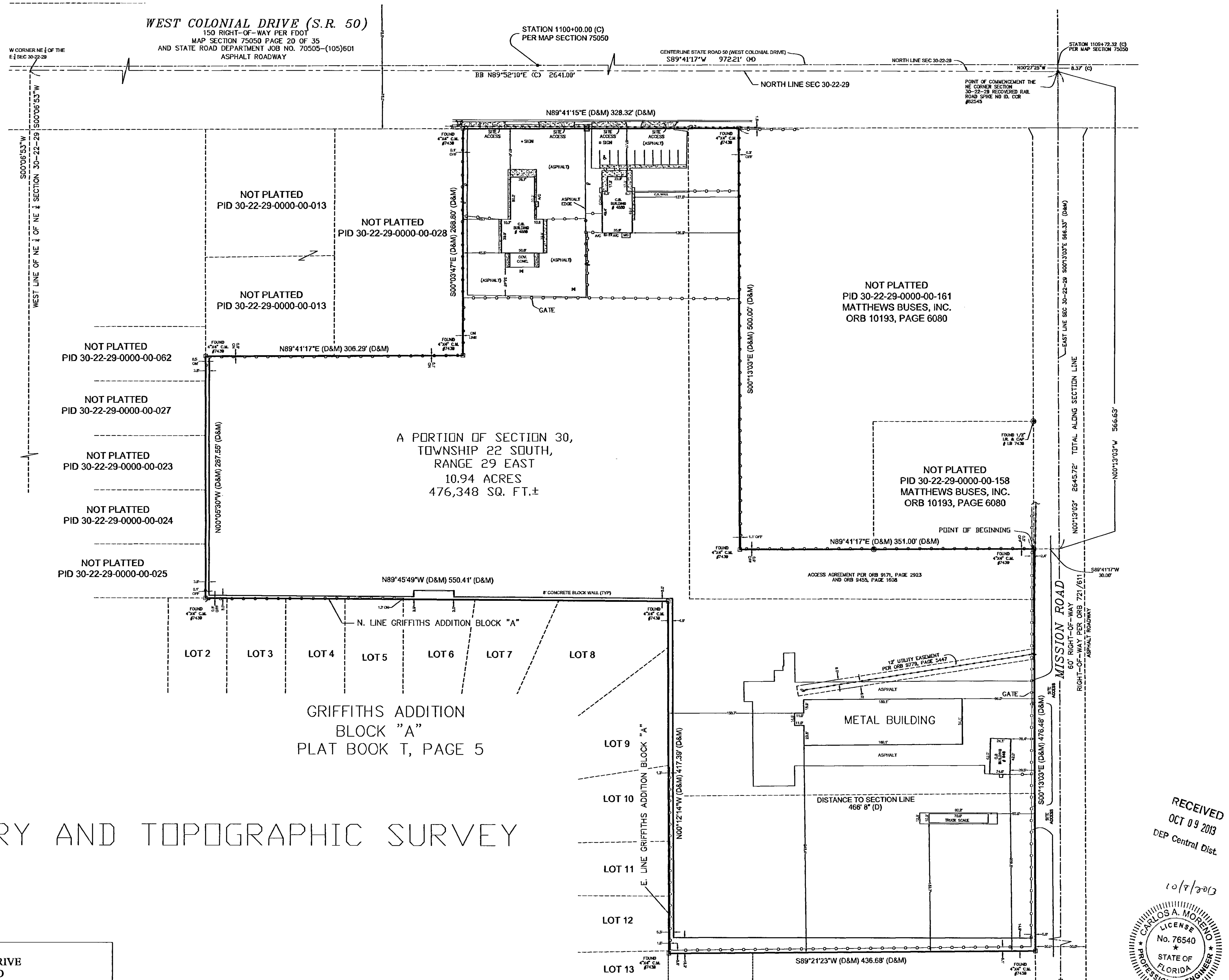

NOT PLATTED
PID 30-22-29-0000-00-140

NOT PLATTED
PID 30-22-29-0000-00-139

RECOVERED 4"X4" CONCRETE MONUMENT LB #6529
IN WELL BOX
E 1/4 CORNER SECTION 30-22-29 CCR 70572

RECEIVED
OCT 09 2013
DEP Central Dist.

10/8/2013

CARLOS A. MORENO
LICENSE No. 76540
STATE OF FLORIDA
PROFESSIONAL ENGINEER

CERTIFY TO AND FOR THE BENEFIT OF:
REGIONS BANK
EMPIRE TIRE OF EDGEWATER, LLC
VINCENT A. CONTESTABLE
CHICAGO TITLE INSURANCE COMPANY
FASSETT, ANTHONY & TAYLOR P.A.

PROPERTY ADDRESS:
4880 AND 4888 WEST COLONIAL DRIVE
AND 548 NORTH MISSION ROAD
ORLANDO, FLORIDA 32808

SURVEYORS CERTIFICATE

I HEREBY CERTIFY THAT THE SURVEY OF THE HEREON DESCRIBED PROPERTY WAS PREPARED UNDER MY DIRECT SUPERVISION AND MEETS THE MINIMUM TECHNICAL STANDARDS SET FORTH BY THE FLORIDA BOARD OF PROFESSIONAL SURVEYORS AND MAPPERS IN CHAPTER 5J-17, FLORIDA ADMINISTRATIVE CODE, PURSUANT TO CHAPTER 472, FLORIDA STATUTES.

02/20/13
ANGEL M. BOSQUES POLANCO DATE
P.S.M. LS 6581

2816 UPDATE
DRAWN BY: MP
CHECKED BY: ABP
FIELD BY: ALM
(FIELD DATE:) 11/08/12
REVISIONS: 02/17/13

ANGEL M. BOSQUES POLANCO

P.S.M. LS 6581
PO.BOX. 421378, KISSIMMEE, FL. 34742
(407) 463-9019

NOTE:
THE MOST UPDATED SURVEY IS WHAT IS PRESENTED FOR THIS PERMIT

BOUNDARY AND TOPOGRAPHIC SURVEY
EMPIRE TIRE RECYCLE FACILITY - 550 MISSION ROAD
ORLANDO, ORANGE COUNTY, FLORIDA

SHEET
2

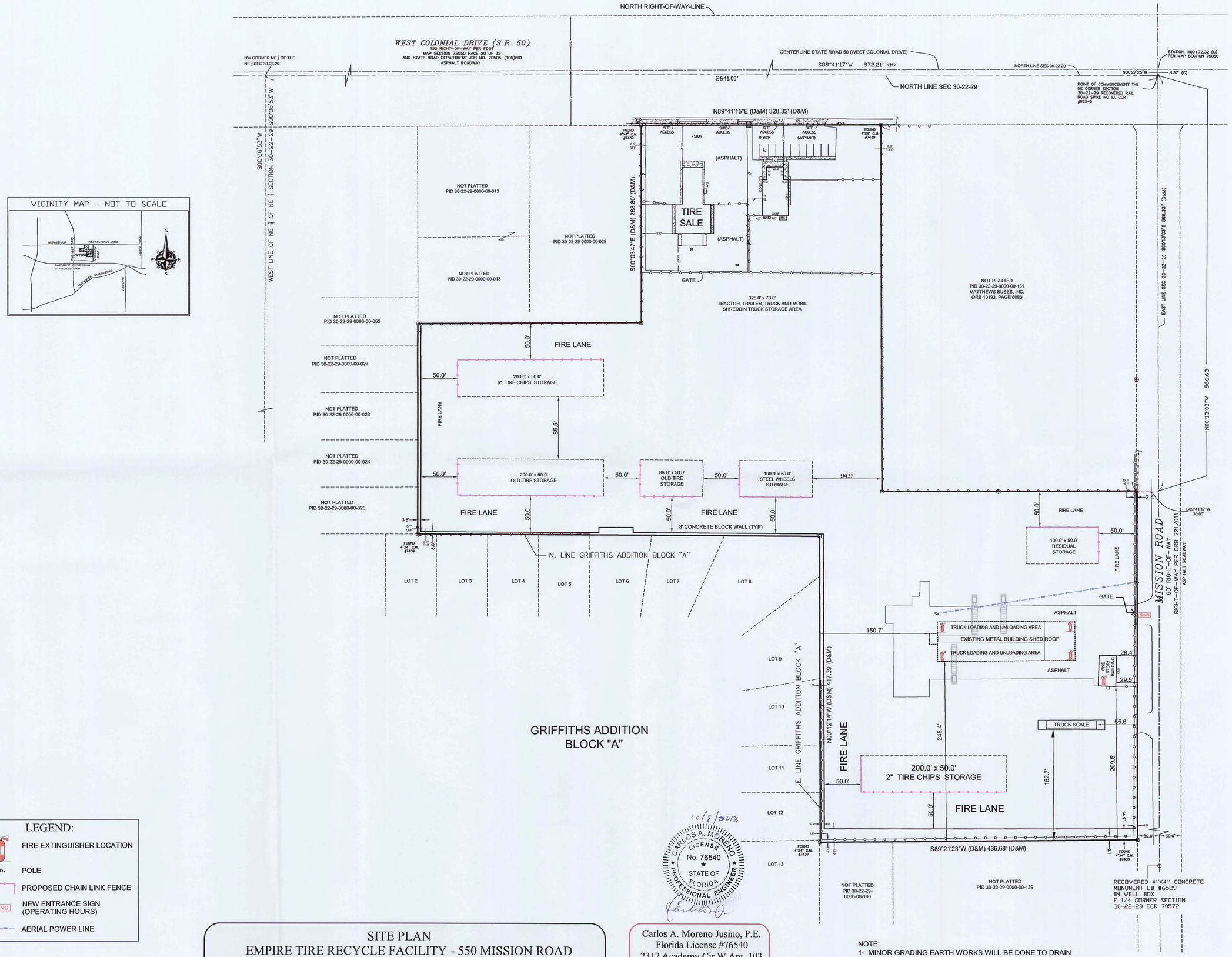

VICINITY MAP - NOT TO SCALE

LEGEND:

- FIRE EXTINGUISHER LOCATION
- POLE
- PROPOSED CHAIN LINK FENCE
- SING — NEW ENTRANCE SIGN (OPERATING HOURS)
- AERIAL POWER LINE

10/8/2013

CARLOS A. MORENO LICENSE No. 76540 STATE OF FLORIDA PROFESSIONAL ENGINEER

SITE PLAN
EMPIRE TIRE RECYCLE FACILITY - 550 MISSION ROAD
ORLANDO, ORANGE COUNTY, FLORIDA

Carlos A. Moreno Jusino, P.E.
Florida License #76540
2312 Academy Cir W Apt. 103
Kissimmee, FL 34744

NOTE:
1- MINOR GRADING EARTH WORKS WILL BE DONE TO DRAIN STORMWATER AWAY FROM TIRE STORAGE PILES

RECEIVED
OCT 09 2013
DEP Central Dist.

SHEET 3

ELIOT DELGADO HERNANDEZ
EDH
EDH CAD DRAWINGS SERVICES