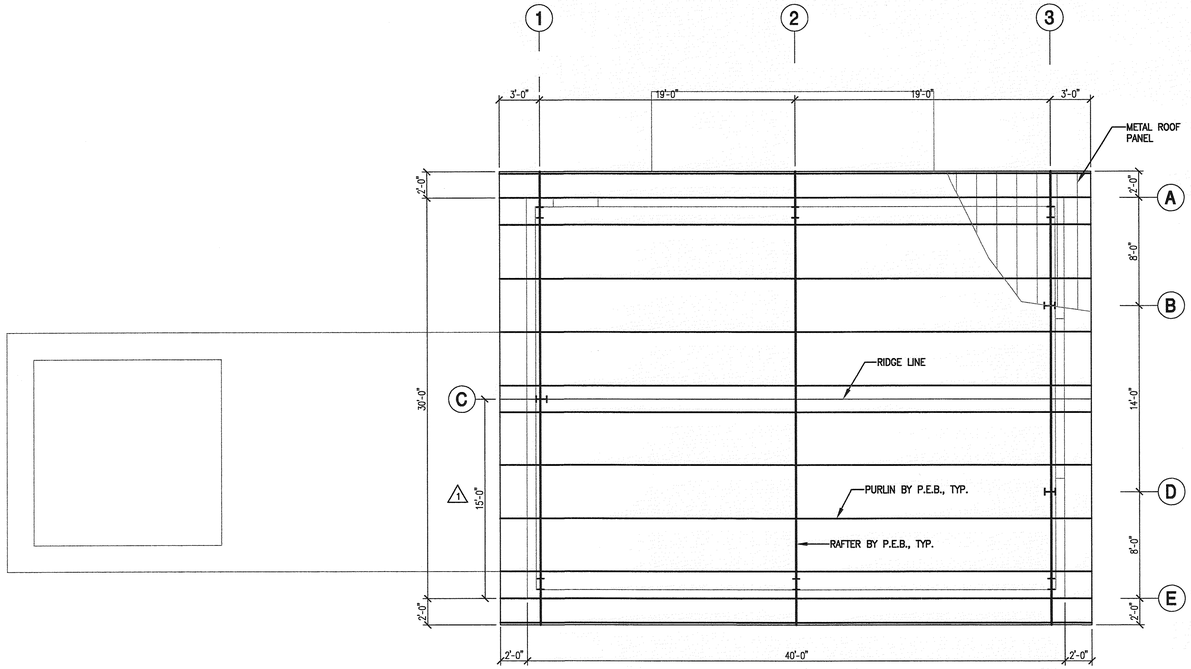

BLOWER BLDG. ROOF FRAMING PLAN
SCALE: 3/16" = 1'-0"

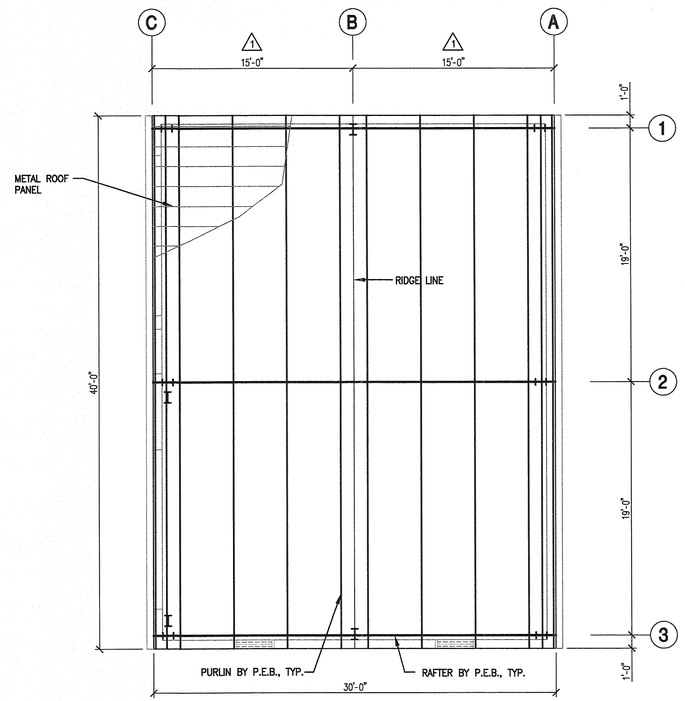

STORAGE BLDG. ROOF FRAMING PLAN
SCALE: 3/16" = 1'-0"

RECORD DRAWING
DATE: APRIL 15, 2010

ELIZABETH A. BROADWAY
LICENSE
No. 38558
STATE OF FLORIDA
ELIZABETH A. BROADWAY
PROFESSIONAL ENGINEER
FLORIDA REGISTRATION NO. 38558
4/16/10

FLORIDA DEPARTMENT OF ENVIRONMENTAL PROTECTION
APR 16 2010
SOUTHWEST DISTRICT TAMPA

BROADWAY ENGINEERING, P.A.
CIVIL, MECHANICAL, STRUCTURAL AND BUILDING DESIGN
See Us At www.Broadway-Eng.Com
1335 W. Cass Street
Tampa, Florida 33606 813-251-9244
Fax 813-251-9330 Bus. Email: Info@Broadway-Eng.Com
Cadd. Email: DGorr@Broadway-Eng.Com
BE-3531 Certificate of Authorization No. 4599

REV	DATE	DESCRIPTION	BY
1	4/21/09	COLUMN CHANGE – PER OWNER	BE
2	4/15/10	REVISED FOR THE RECORD	BE

CERTIFICATE NO.

DRAWING TITLE
BLOWER/STORAGE BUILDINGS ROOF FRAMING PLAN

PROJECT TITLE
SOUTHEAST COUNTY LANDFILL LANDFILL GAS COLLECTION AND CONTROL SYSTEM

CLIENT
HILLSBOROUGH COUNTY SOLID WASTE MANAGEMENT DEPARTMENT TAMPA, FLORIDA

SCS ENGINEERS
STEARNS, CONRAD AND SCHMIDT
CONSULTING ENGINEERS
4041 Park Oaks Blvd., Suite 100, Tampa, FL 33610
PH (813) 621-0080 FAX NO. (813) 623-6757
FLORIDA CERTIFICATE OF AUTHORIZATION NO. 00004892

PROJ. NO. 09207055.00 | DWN. BY: DEG | Q/A RVW BY: EAB
DSN. BY: EAB | CHK. BY: EAB | APP. BY: EAB

CADD FILE: BE-3531 – S-5
DATE: JULY 2008
SCALE: AS SHOWN
DRAWING NO.
S-5 of 30

C:\Cad\JOBS\3531\RECORD\S-5-RECORD.dwg Apr 15, 2010 – 3:41pm Layout Name: S-5 By: DOUGLAS GORR